HL-13371
SHEET 2 OF 2

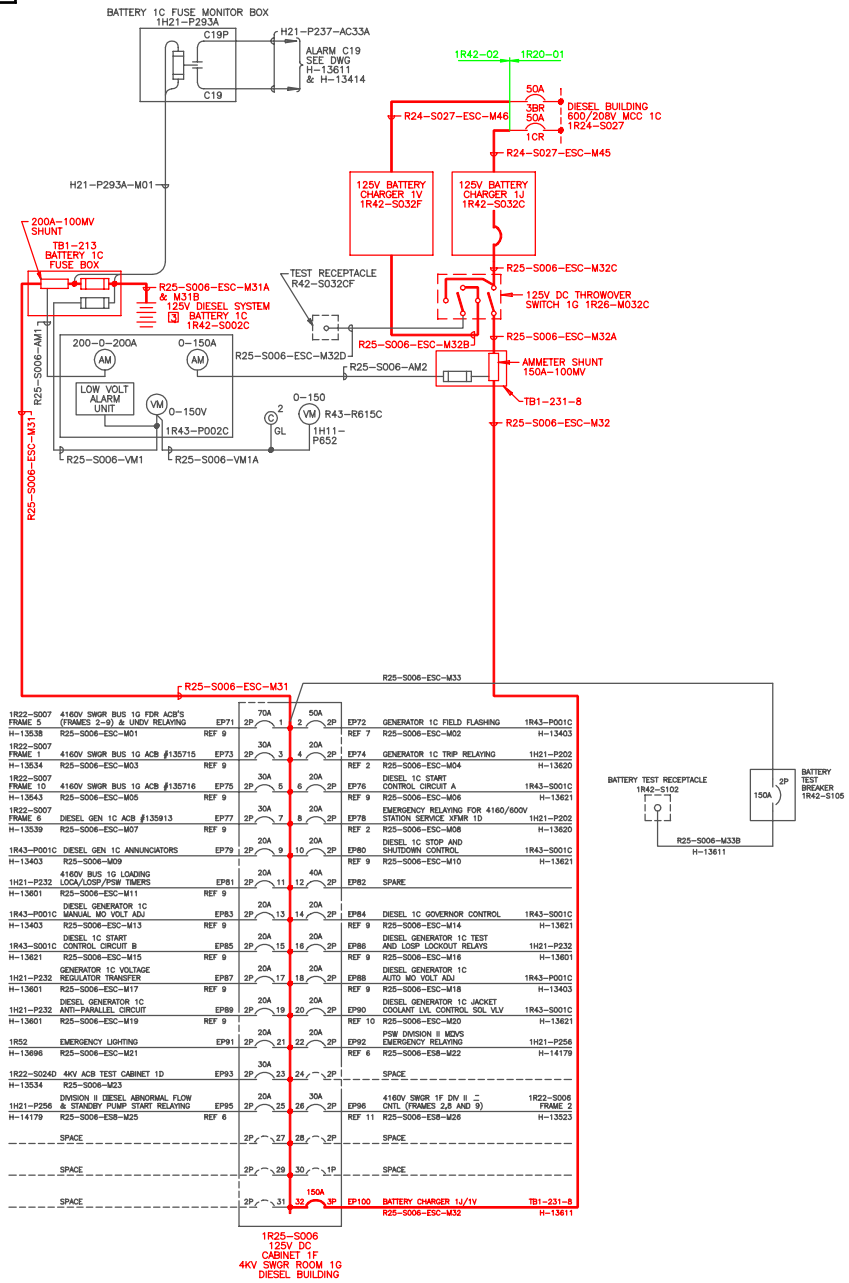

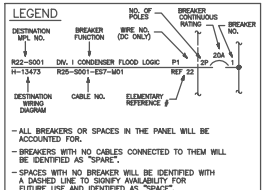

FOR NOTES AND REFERENCES SEE
DRAWING H-13371 SHEET 1

LICENSE RENEWAL DOCUMENT

MPL NO. 1R25 | ACAD14 | HL1337102

SOUTHERN COMPANY

LICENSE RENEWAL SCREENING
FOR INFORMATION ONLY

EDWIN I. HATCH NUCLEAR PLANT UNIT No. 1
SINGLE LINE DIAGRAM
125V DC
EMERGENCY STATION SERVICE MPL 1R25-S006

BOUNDARY DIAGRAM NO.:1R42-B02-02

FUNCTION(S) NO.: 1R42-02

PREPARED BY: MARK CRISLER
DATE: 4/20/98
REVIEWED BY: RENEE RITCHEY
DATE: 4/28/98

Revision: A | Date: 11-18-99

APPROVED. ISSUED PER LICENSE RENEWAL BOUNDARY PACKAGES. DRAWING CREATED FROM H-13371 SH.2, REV.7; BY TRM.

BY	DWN	APPR
TRM	RBR	ASK

DRAWN	DESIGNED	LOCATION	DOCUMENT NUMBER	REVISION
TRM	LCF	10-502	HL-13371 SHEET 2 OF 2	A
DATE	SCALE			
	None			