HL-13371SH. 1

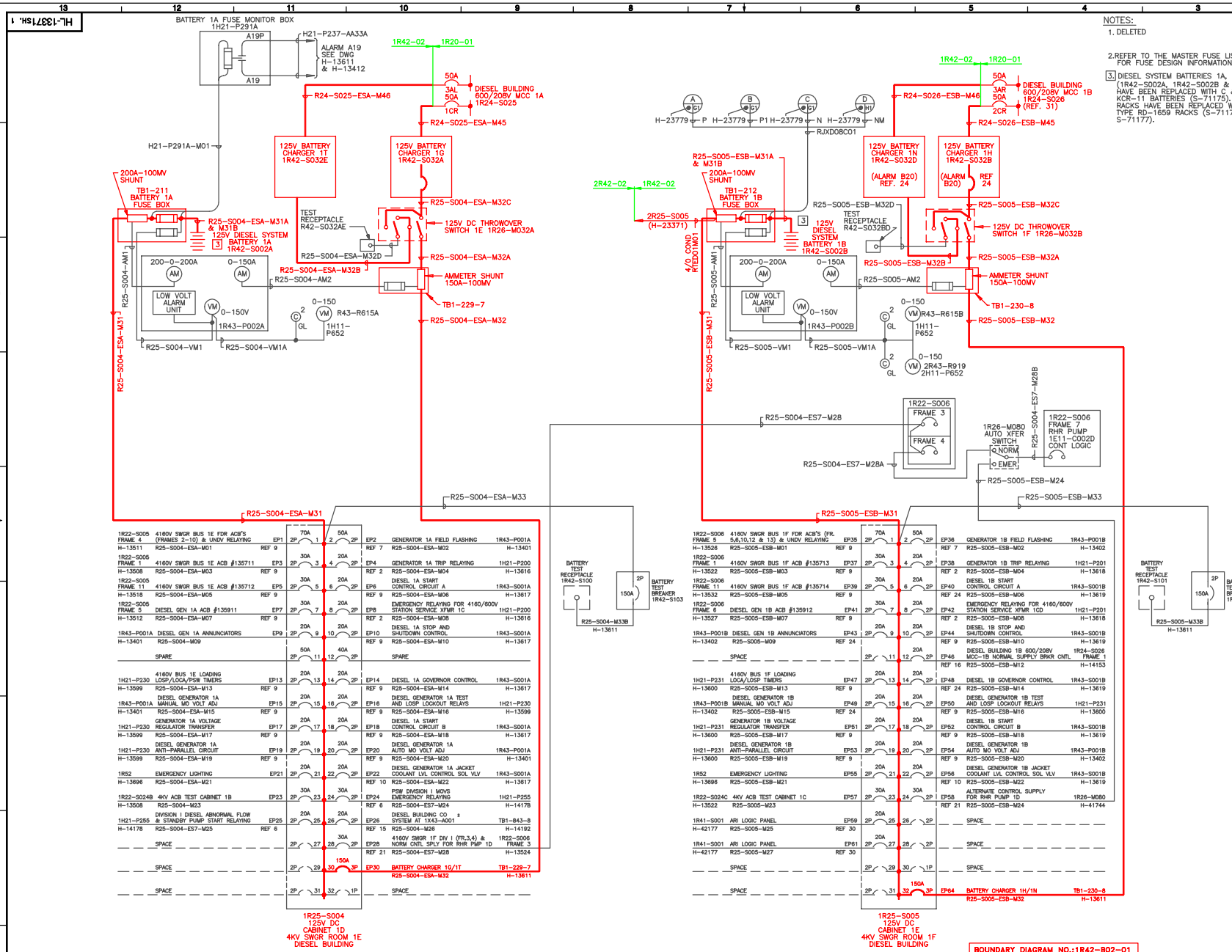

NOTES:

1. DELETED

2. REFER TO THE MASTER FUSE LIST FOR FUSE DESIGN INFORMATION

3. DIESEL SYSTEM BATTERIES 1A, 1B & 1C (1R42-S002A, 1R42-S002B & 1R42-S002C) HAVE BEEN REPLACED WITH C & D TYPE KCR-11 BATTERIES (S-71175). BATTERY RACKS HAVE BEEN REPLACED WITH C & D TYPE RD-1659 RACKS (S-71176 & S-71177).

LEGEND

DESTINATION MPL NO. — BREAKER FUNCTION — WIRE NO. (DC ONLY) — NO. OF POLES — BREAKER CONTINUOUS RATING — BREAKER NO.

R22-S001 H-13473 — DIV. I CONDENSER FLOOD LOGIC — R26-S001-ES7-M01 — P1 — 2P — 20A — 1

DESTINATION WIRING DIAGRAM — CABLE NO. — ELEMENTARY REFERENCE

- ALL BREAKERS OR SPACES IN THE PANEL WILL BE ACCOUNTED FOR.
- BREAKERS WITH NO CABLES CONNECTED TO THEM WILL BE IDENTIFIED AS "SPARE".
- SPACES WITH NO BREAKER WILL BE IDENTIFIED WITH A DASHED LINE TO SIGNIFY AVAILABILITY FOR FUTURE USE AND IDENTIFIED AS "SPACE".
- ALL TWO POLE D C BREAKERS WILL BE COUNTED AS 1 POSITION FOR BREAKER NUMBERING PURPOSES

REFERENCES:

1. H-13373 SYNCHRONIZING AND VOLTMETER SCHEMATIC DIAGRAM
2. H-13381 ELEMENTARY DIAG DIFFERENTIAL AUXILIARY RELAYS
3. H-13382 ELEMENTARY DIAGRAM 4160V STATION SERVICE SUPPLY ACB'S
4. H-13384 ELEMENTARY DIAGRAM 600V AND 208V STATION SERVICE
5. H-13385 ELEMENTARY DIAGRAM 600V STATION SERVICE SUPPLY ACB'S
6. H-13388 ELEMENTARY DIAGRAM PLANT SERVICE WATER MOV'S
7. H-13404 SCHEMATIC DIAGRAM DIESEL GEN 1A,1B AND 1C EXCITERS
8. H-13411 SCHEMATIC RELAY DIAGRAM EMERGENCY STATION SERVICE
9. H-13412-H-13414 ELEMENTARY DIAGRAM DIESEL GENERATOR 1A,1B AND 1C
10. H-13584 ELEMENTARY DIAGRAM DIESEL MISCELLANEOUS EQUIPMENT
11. H-13586 ELEMENTARY DIAGRAM PLANT SERVICE WATER PUMPS
12. H-13587 CONTACT TABULATION DIESEL GENERATOR CONTROLS
13. H-13588 CONTACT TABULATION DIESEL GENERATOR CONTROLS
14. H-13589 ELEMENTARY DIAGRAM EMERGENCY STATION SERVICE MISC
15. H-14191 ELEMENTARY DIAGRAM FIRE PROTECTION SYSTEM DIESEL BUILDING
16. H-14239 ELEMENTARY DIAGRAM DIESEL BUILDING 4160/600V EMERGENCY STATION SERVICE FDRS
17. H-14245 ELEMENTARY DIAGRAM FIRE PROTECTION SYSTEM CABLE SPREADING ROOM AND INTAKE STRUCTURE
18. H-17112 ELEMENTARY DIAGRAM CORE SPRAY SYSTEM
19. H-17113 ELEMENTARY DIAGRAM CONTROL ROD DRIVE HYDRAULIC INSTRUMENT SYSTEM
20. H-17114 ELEMENTARY DIAGRAM CONTROL ROD DRIVE HYDRAULIC INSTRUMENT SYSTEM
21. H-17776-H-17782 ELEMENTARY DIAGRAM RESIDUAL HEAT REMOVAL SYSTEM
22. H-19782 ELEMENTARY DIAGRAM ERF DIGITAL MULTIPLEXER SYSTEM
23. H-23668-H-23670 ELEMENTARY DIAGRAM EMERGENCY STATION SERVICE SYSTEM
24. H-23773-H-23779 ELEMENTARY DIAGRAM DIESEL GENERATOR 2B 2R43B SYSTEM
25. H-23783 ELEMENTARY DIAGRAM FIRE PROTECTION DIESEL BUILDING
26. H-13371 SHEET 2 SINGLE LINE DIAGRAM 125V DC EMERGENCY STATION SERVICE 1R25-S006
27. A-10173 LOAD LIST FOR DISTRIBUTION PANEL 1R25-S004
28. A-10174 LOAD LIST FOR DISTRIBUTION PANEL 1R25-S005
29. A-10175 LOAD LIST FOR DISTRIBUTION PANEL 1R25-S006
30. H-42172 ELEMENTARY DIAGRAM ATWS-ARI SYSTEM C11
31. H-13648 SINGLE LINE DIAG.DIESEL BLDG. 600/208V MCC-1B & 1D 1R24-S026,1R24-S048,& 1R25-S035

LICENSE RENEWAL DOCUMENT

MPL NO. 1R25 | ACAD14 | HL1337101

SOUTHERN COMPANY

LICENSE RENEWAL SCREENING FOR INFORMATION ONLY

EDWIN I. HATCH NUCLEAR PLANT UNIT No. 1
SINGLE LINE DIAGRAM
125V DC EMERGENCY STATION SERVICE
MPL'S 1R25-S004 AND 1R25-S005

DRAWN	DESIGNED	LOCATION	DOCUMENT NUMBER	REVISION
TRM	LGF	10-502	HL-13371 SHEET 1 OF 2	A
DATE	SCALE None			

BOUNDARY DIAGRAM NO.:1R42-B02-01

FUNCTION(S) NO.: 1R42-02

PREPARED BY: MARK CRISLER

DATE: 4/20/98

REVIEWED BY: R B RITCHEY

DATE: 4/28/98

Revision: A | Date: 11-17-99

APPROVED. ISSUED PER LICENSE RENEWAL BOUNDARY PACKAGES. DRAWING CREATED FROM H-13371 SH.1, REV.32; BY TRM.

BY	CHK'D	APPR'D
TRM	RBR	ASK