HL-11638SH.2

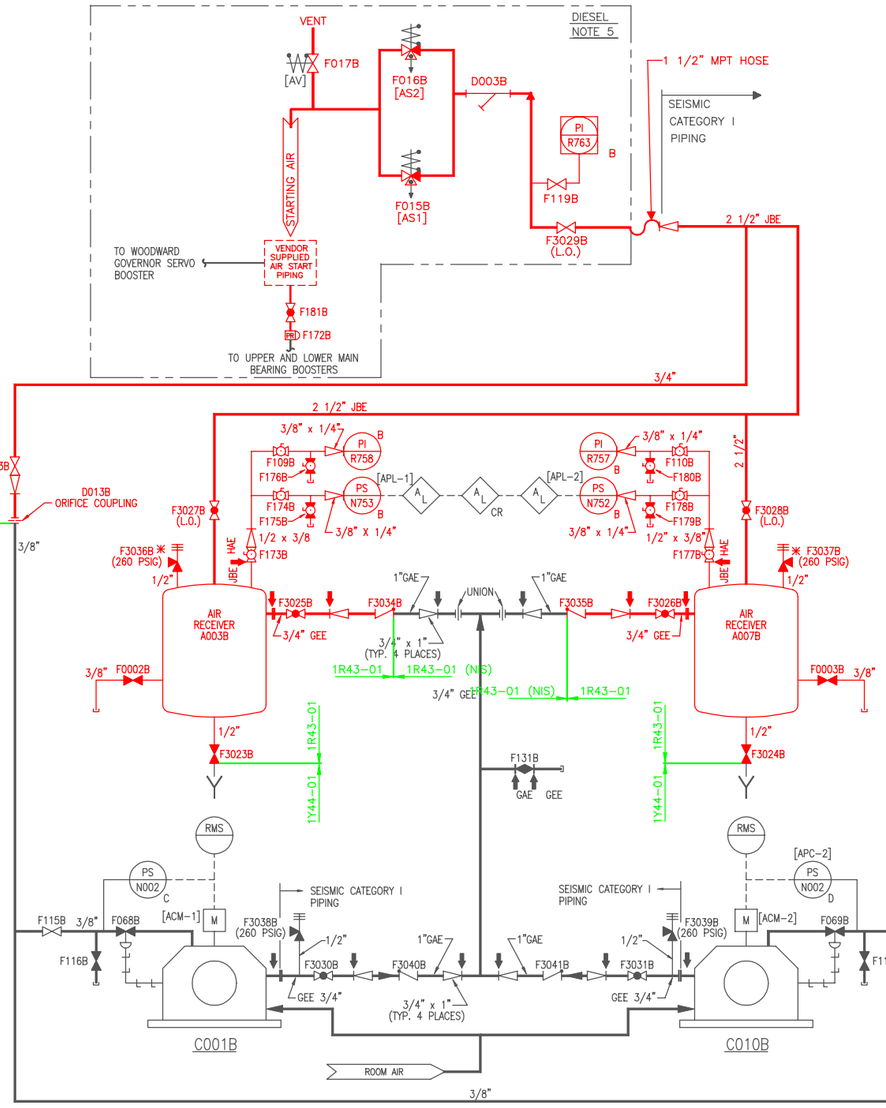

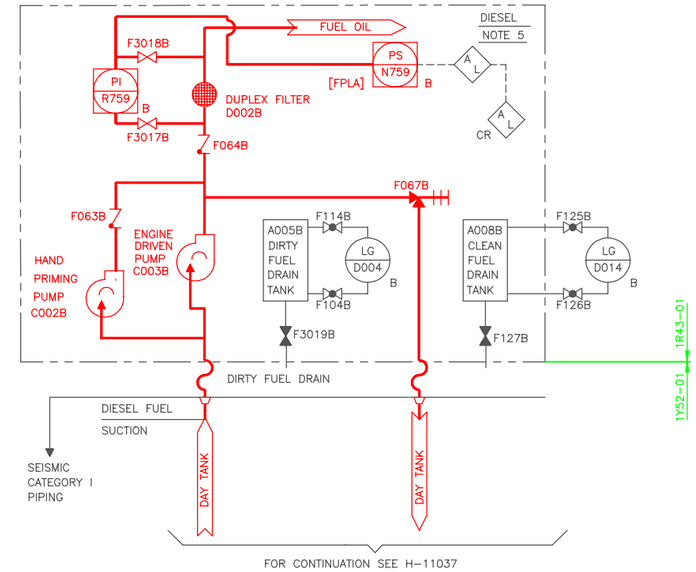

NOTES:

.1. ALL EQUIPMENT MPL NUMBERS PRECEDED BY R43 UNLESS OTHERWISE NOTED.
2. THIS DRAWING ORIGINATED FROM VENDOR DRAWINGS S-13637 THRU S-13641
3. ALL EQUIPMENT IS PROVIDED BY FAIRBANKS MORSE UNLESS OTHERWISE NOTED WITH AN ASTERISK (*) .
4. ALL PIPING EXTERNAL TO DIESEL SKID TO BE BY PIPING CONTRACTOR.
5. EQUIPMENT MOUNTED ON DIESEL SKID
6. [ ] FAIRBANKS MORSE DESIGNATIONS

REFERENCES: S;ALKDSA;LDK

	TITLE	MPL NO.	DWG. NO
1.	PIPING AND INSTRUMENT SYMBOLS	A42-1010	S-15051
2.	SERVICE WATER AT DIESEL GEN. P&ID		H-11600
3.	DEMINERALIZED WATER SYSTEM P&ID		H-11038
4.	FUEL OIL SYSTEM P&ID		H-11037
5.	P&ID DIESEL GEN. 1A & 1C SHEET 1.		H-11631 SHT. 1
6.	P&ID DIESEL GEN. 1A & 1C SHEET 2.		H-11631 SHT. 2
7.	P&ID DIESEL GEN. 1B SHEET 1.		H-11638 SHT. 1

BOUNDARY DIAGRAM NO.:1R43-B01-03
FUNCTION(S) NO.: 1R43-01
PREPARED BY: ALEX MORRISON
DATE: 12/18/98
REVIEWED BY: WILLIAM P EVANS
DATE: 12/21/98

BOUNDARY DIAGRAM NO.:1Y52-B01-05
FUNCTION(S) NO.: 1Y52-01
PREPARED BY: ALEX MORRISON
DATE: 1/28/98
REVIEWED BY: BO ROSBERG
DATE: 2/18/98

LICENSE RENEWAL DOCUMENT

MPL NO. 1R43 | ACAD14 | HL1163802

SOUTHERN COMPANY

LICENSE RENEWAL SCREENING FOR INFORMATION ONLY

Revision: A | Date: 11-08-99

APPROVED. ISSUED PER LICENSE RENEWAL BOUNDARY PACKAGES. DRAWING CREATED FROM H-11638 SH.2, REV.4; BY TRM.

BY	CHK'D	APPR.1
TRM	MDS	ASK

EDWIN I. HATCH NUCLEAR PLANT UNIT No.1
P & ID
DIESEL GENERATOR 1B
SHEET 2

DRAWN	DESIGNED	LOCATION	DOCUMENT NUMBER	REVISION
TRM	LCF	10-502	HL-11638 SH.2	A
DATE	SCALE: None			