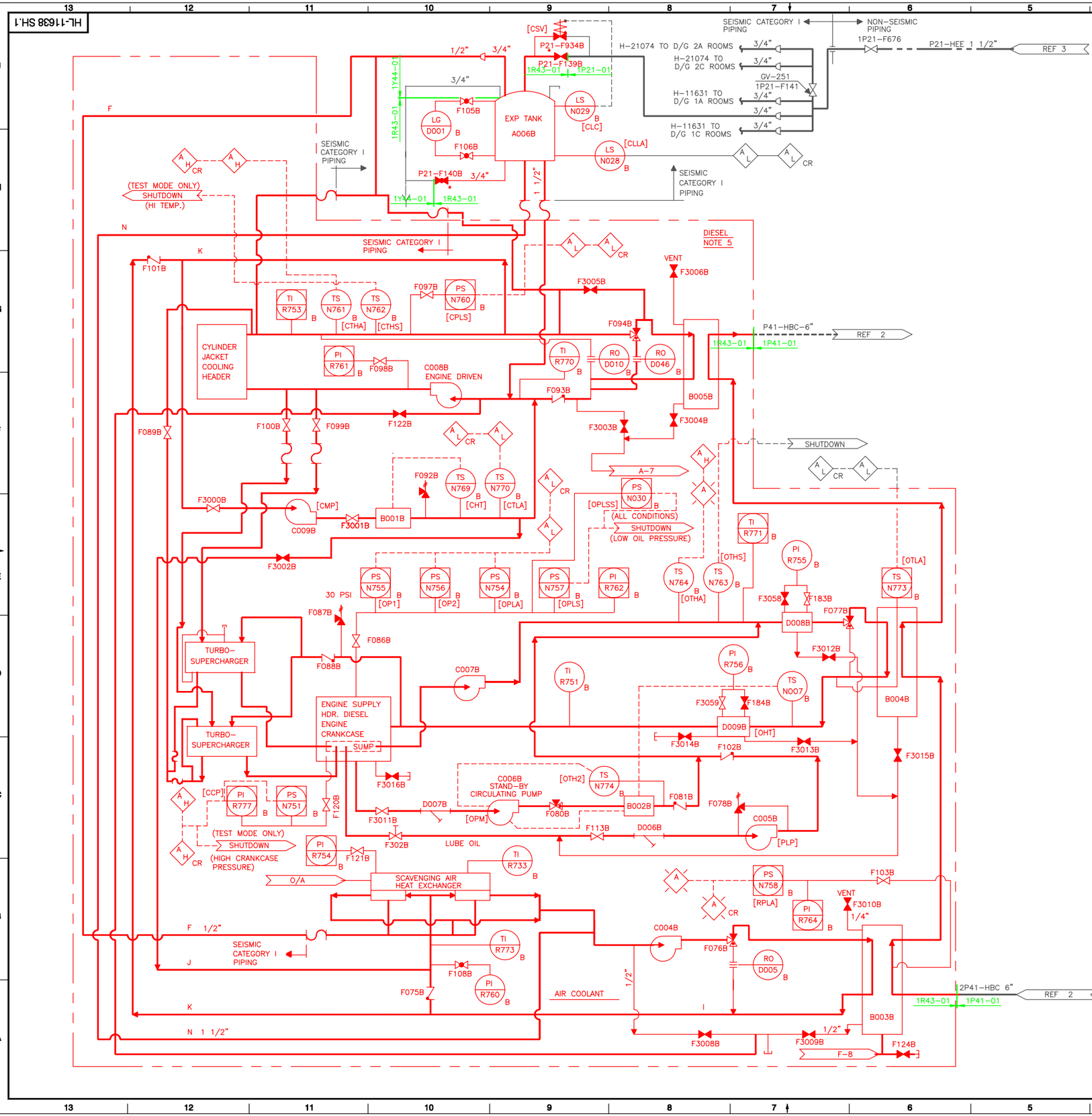

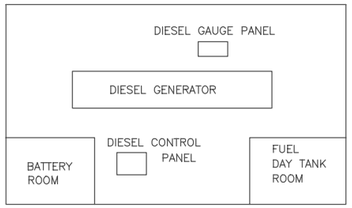

DIESEL ROOM LAYOUT

NOTES:

.1. ALL EQUIPMENT MPL NUMBERS PRECEDED BY R43 UNLESS OTHERWISE NOTED.
2. THIS DRAWING ORIGINATED FROM VENDOR DRAWINGS S-13637 THRU S-13641 .
3. ALL EQUIPMENT IS PROVIDED BY FAIRBANKS MORSE UNLESS OTHERWISE NOTED WITH AN ASTERISK (*) .
4. ALL PIPING EXTERNAL TO DIESEL SKID TO BE BY PIPING CONTRACTOR.
5. EQUIPMENT MOUNTED ON DIESEL SKID .
6. [ ] FAIRBANKS MORSE DESIGNATIONS

REFERENCES:

	TITLE	MPL NO.	DWG. NO
1.	PIPING AND INSTRUMENT SYMBOLS	A42-1010	S-15051
2.	SERVICE WATER AT DIESEL GEN. P&ID		H-11600
3.	DEMINERALIZED WATER SYSTEM P&ID		H-11038
4.	FUEL OIL SYSTEM P&ID		H-11037
5.	P&ID DIESEL GEN. 1A & 1C SHEET 1.		H-11631 SHT. 1
6.	P&ID DIESEL GEN. 1B SHEET 2.		H-11638 SHT. 2
7.	P&ID DIESEL GEN. 1A & 1C SHEET 2.		H-11631 SHT. 2

BOUNDARY DIAGRAM NO.:1R43-B01-05

FUNCTION(S) NO.: 1R43-01

PREPARED BY: Alex Morrison
DATE: 12/18/98
REVIEWED BY: William P. Evans
DATE: 12/28/98

LICENSE RENEWAL DOCUMENT

MPL NO. R43

ACAD14 | HL1163801

SOUTHERN COMPANY

LICENSE RENEWAL SCREENING FOR INFORMATION ONLY

EDWIN I. HATCH NUCLEAR PLANT UNIT No. 1
P & I D
DIESEL GENERATOR 1B
SHEET 1

Revision: A	Date: 11-11-99
APPROVED. ISSUED PER LICENSE RENEWAL BOUNDARY PACKAGES. DRAWING CREATED FROM H-11638 SH.1, REV 18; BY BKN.	

BY	CHK'D	APPR.'L
BKN	MDS	ASK

DRAWN	DESIGNED	LOCATION	DOCUMENT NUMBER	REVISION
BKN	LCF	10-502	HL-11638	A
DATE	SCALE None			