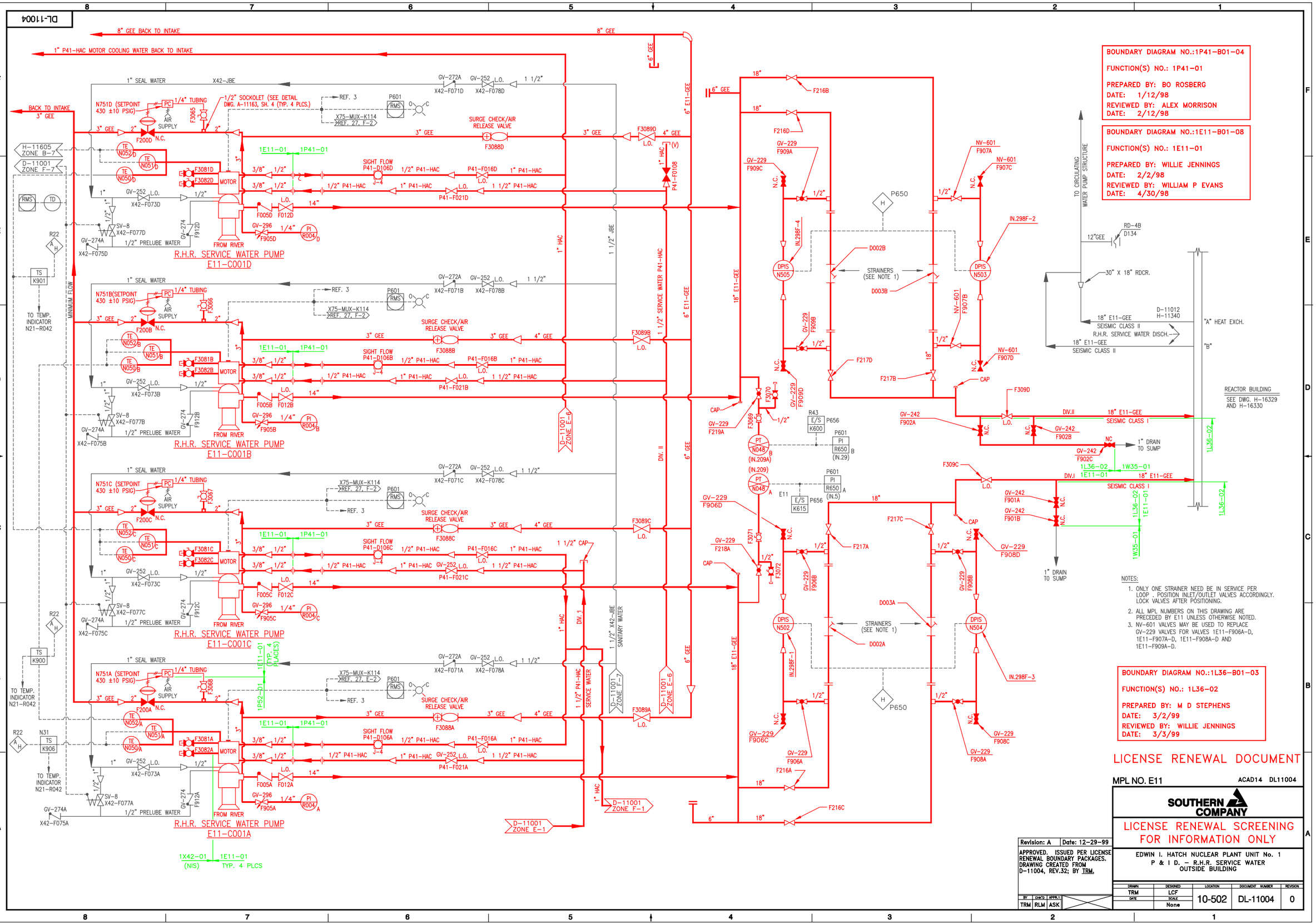
DL-11004
8" GEE BACK TO INTAKE
1" P41-HAC MOTOR COOLING WATER BACK TO INTAKE
BACK TO INTAKE 3" GEE
R.H.R. SERVICE WATER PUMP E11-C001D
R.H.R. SERVICE WATER PUMP E11-C001B
R.H.R. SERVICE WATER PUMP E11-C001C
R.H.R. SERVICE WATER PUMP E11-C001A
FROM RIVER
MOTOR
SURGE CHECK/AIR RELEASE VALVE
SIGHT FLOW
1/2" PRELUBE WATER
1" SEAL WATER
1/2" SOCKOLET (SEE DETAIL DWG. A-11163, SH. 4 (TYP. 4 PLCS.)
MINIMUM FLOW
TO TEMP. INDICATOR N21-R042
TO CIRCULATING WATER PUMP STRUCTURE
30" X 18" RDCR.
18" E11-GEE SEISMIC CLASS II
R.H.R. SERVICE WATER DISCH.
"A" HEAT EXCH.
"B"
REACTOR BUILDING
SEE DWG. H-16329 AND H-16330
18" E11-GEE SEISMIC CLASS I
1" DRAIN TO SUMP
STRAINERS (SEE NOTE 1)
P650
1" HAC SERVICE WATER P41-HAC
1 1/2" JBE
1 1/2" X42-JBE SANITARY WATER
1 1/2" P41-HAC SERVICE WATER
D-11001 ZONE E-6
D-11001 ZONE E-7
D-11001 ZONE E-1
D-11001 ZONE F-1
H-11605 ZONE B-7
D-11001 ZONE F-7
1E11-01 1P41-01
1E11-01 (TYP. 4 PLACES)
1P52-01
1X42-01 (NIS)
1E11-01 TYP. 4 PLCS
1L36-02
1W35-01
1E11-01
DIV. I
DIV. II
DIV. 1
BOUNDARY DIAGRAM NO.:1P41-B01-04
FUNCTION(S) NO.: 1P41-01
PREPARED BY: BO ROSBERG
DATE: 1/12/98
REVIEWED BY: ALEX MORRISON
DATE: 2/12/98
BOUNDARY DIAGRAM NO.:1E11-B01-08
FUNCTION(S) NO.: 1E11-01
PREPARED BY: WILLIE JENNINGS
DATE: 2/2/98
REVIEWED BY: WILLIAM P EVANS
DATE: 4/30/98
NOTES:
1. ONLY ONE STRAINER NEED BE IN SERVICE PER LOOP . POSITION INLET/OUTLET VALVES ACCORDINGLY. LOCK VALVES AFTER POSITIONING.
2. ALL MPL NUMBERS ON THIS DRAWING ARE PRECEDED BY E11 UNLESS OTHERWISE NOTED.
3. NV-601 VALVES MAY BE USED TO REPLACE GV-229 VALVES FOR VALVES 1E11-F906A-D, 1E11-F907A-D, 1E11-F908A-D AND 1E11-F909A-D.
BOUNDARY DIAGRAM NO.:1L36-B01-03
FUNCTION(S) NO.: 1L36-02
PREPARED BY: M D STEPHENS
DATE: 3/2/99
REVIEWED BY: WILLIE JENNINGS
DATE: 3/3/99
LICENSE RENEWAL DOCUMENT
MPL NO. E11
ACAD14 DL11004
SOUTHERN COMPANY
LICENSE RENEWAL SCREENING FOR INFORMATION ONLY
EDWIN I. HATCH NUCLEAR PLANT UNIT No. 1
P & I D. – R.H.R. SERVICE WATER OUTSIDE BUILDING
Revision: A Date: 12-29-99
APPROVED. ISSUED PER LICENSE RENEWAL BOUNDARY PACKAGES. DRAWING CREATED FROM D-11004, REV.32; BY TRM.
TRM RLM ASK
TRM LCF None 10-502 DL-11004 0