U.S.NRC
UNITED STATES NUCLEAR REGULATORY COMMISSION
Protecting People and the Environment

Overview of NRC Program Plans for Updating the Waste Confidence Decision and Extended Storage and Transportation

October 4, 2011

James Rubenstone
Office of Nuclear Material Safety and Safeguards

Two Complementary Initiatives

- Waste Confidence Update
  - Generic determination; not site specific, not for specific licensing reviews or decisions
  - Updated in 2010 for licensed facility life plus 60 years; potential update for longer time period
- Extended Storage and Transportation (EST)
  - Technical studies to provide basis for safe storage over longer periods, and related transportation
  - May involve changes to NRC storage and transportation regulations and guidance

Waste Confidence and EST

Common Interests, Complementary Goals

- Commercial spent nuclear fuel
- Dry storage over long periods
- Same system, effects, and processes
- Same types of technical information
- Waste Confidence: Focus on Environmental Impacts
  - Broad scope, representative analyses
  - NEPA process
- EST: Focus on Technical Basis for Licensing Actions
  - Significance for performance for safety
  - Supports regulations, guidance, application review, and decision

Dry Cask Storage Systems

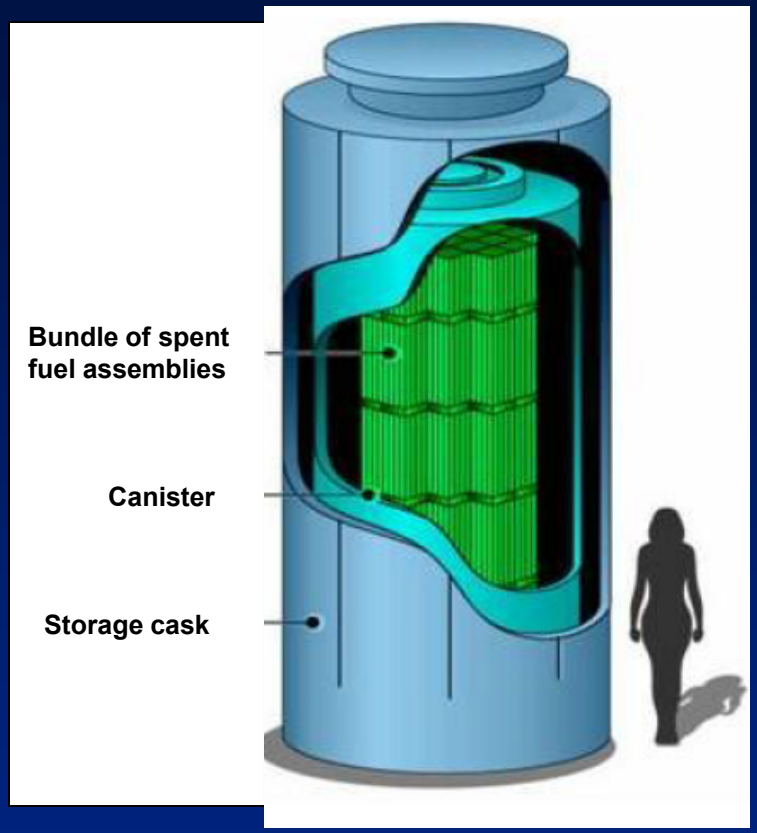

- Spent fuel assemblies in inert dry atmosphere
- Vertical or horizontal
- Different designs in use

Transportation of Spent Nuclear Fuel

Generic Truck Cask for Spent Fuel

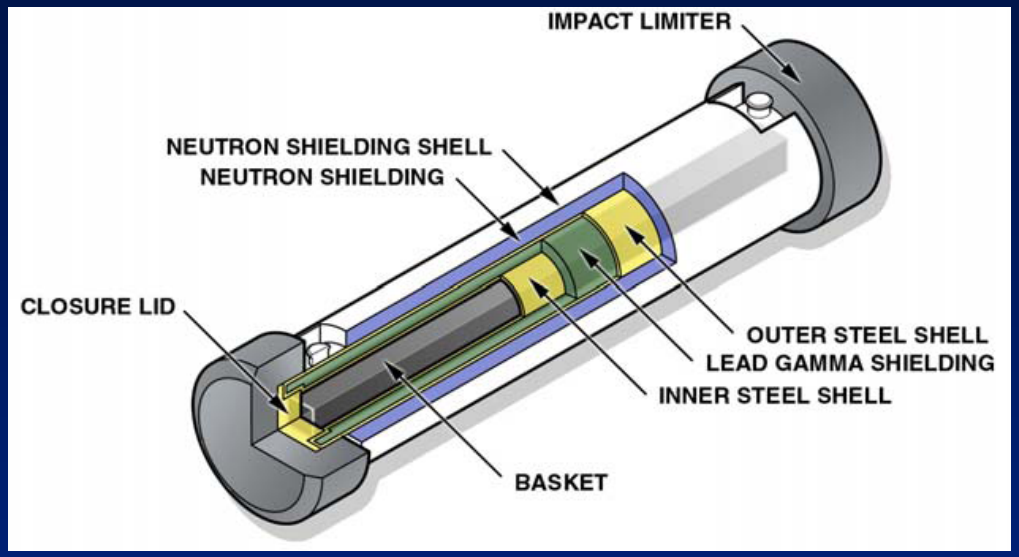

- Transport by rail or truck
- NRC certifies transport casks
- Department of Transportation regulates shipments in transit

Engagement Opportunities

- Multi-year, multi-phase projects
- Initial NRC staff efforts are to clearly define tasks and develop plans and schedules
- Staff are now preparing draft reports for each initiative, for public comment, later this year
- NRC NEPA process provides for public engagement
- Expect to have more reports for comment, and more public meetings
- Seeking best ways to continue productive interaction