ENCLOSURE 5

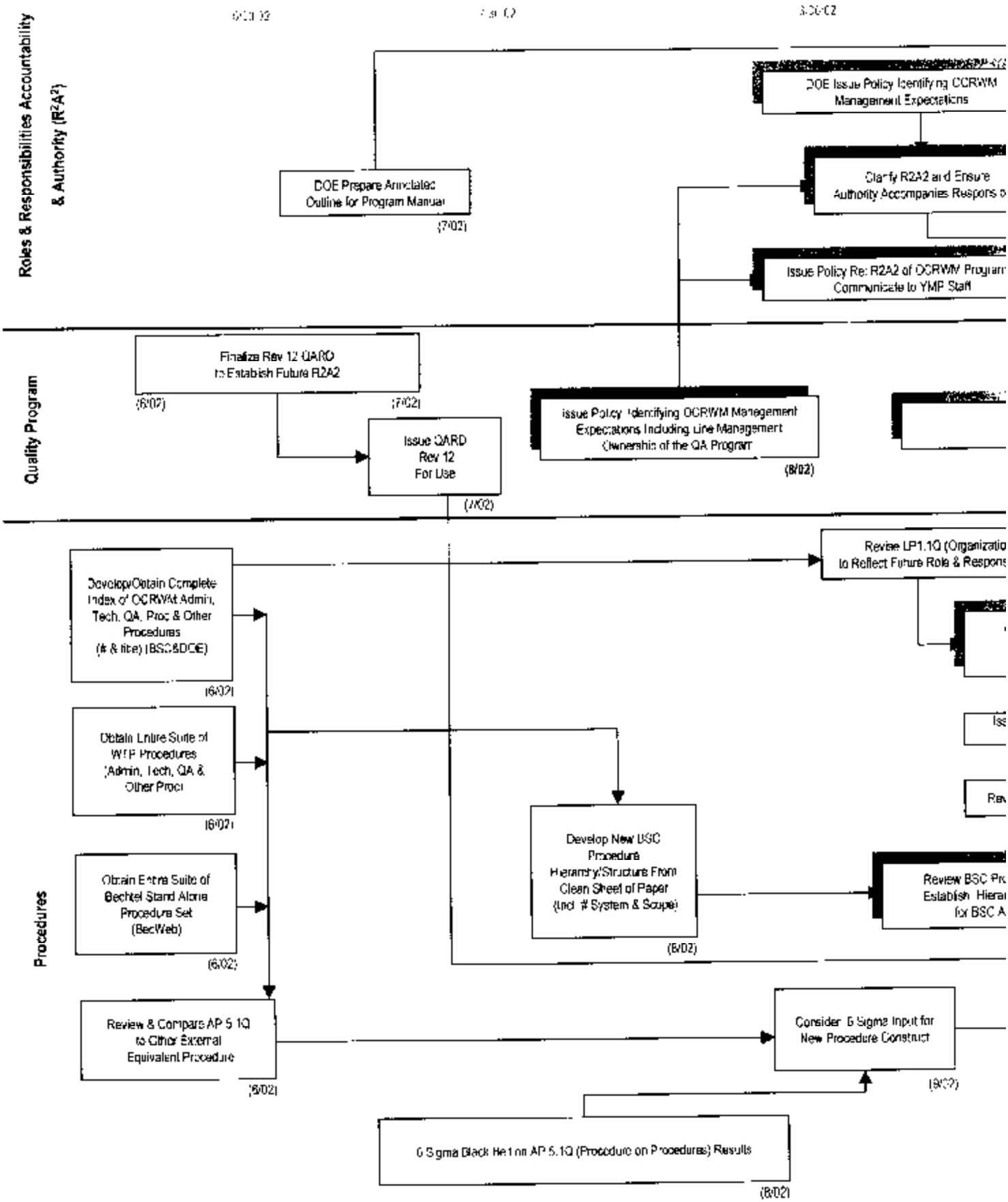
Roles & Responsibilities Accountability & Authority (R2A2)
DOE Prepare Annotated Outline for Program Manual
(7/02)
DOE Issue Policy Identifying OCRWM Management Expectations
Clarify R2A2 and Ensure Authority Accompanies Respons
Issue Policy Re: R2A2 of OCRWM Program Communicate to YMP Staff
Quality Program
Finalize Rev 12 QARD to Establish Future R2A2
(6/02)
(7/02)
Issue QARD Rev 12 For Use
(7/02)
Issue Policy Identifying OCRWM Management Expectations Including Line Management Ownership of the QA Program
(8/02)
Procedures
Develop/Obtain Complete Index of OCRWM Admin, Tech, QA, Proc & Other Procedures (# & title) (BSC&DOE)
(6/02)
Obtain Entire Suite of WTP Procedures (Admin, Tech, QA & Other Proc)
(6/02)
Obtain Entire Suite of Bechtel Stand Alone Procedure Set (BecWeb)
(6/02)
Review & Compare AP 5.1Q to Other External Equivalent Procedure
(6/02)
Develop New BSC Procedure Hierarchy/Structure From Clean Sheet of Paper (Incl # System & Scope)
(8/02)
Review LP1.1Q (Organizatio to Reflect Future Role & Respons
Consider 6 Sigma Input for New Procedure Construct
(8/02)
6 Sigma Black Belt on AP 5.1Q (Procedure on Procedures) Results
(8/02)

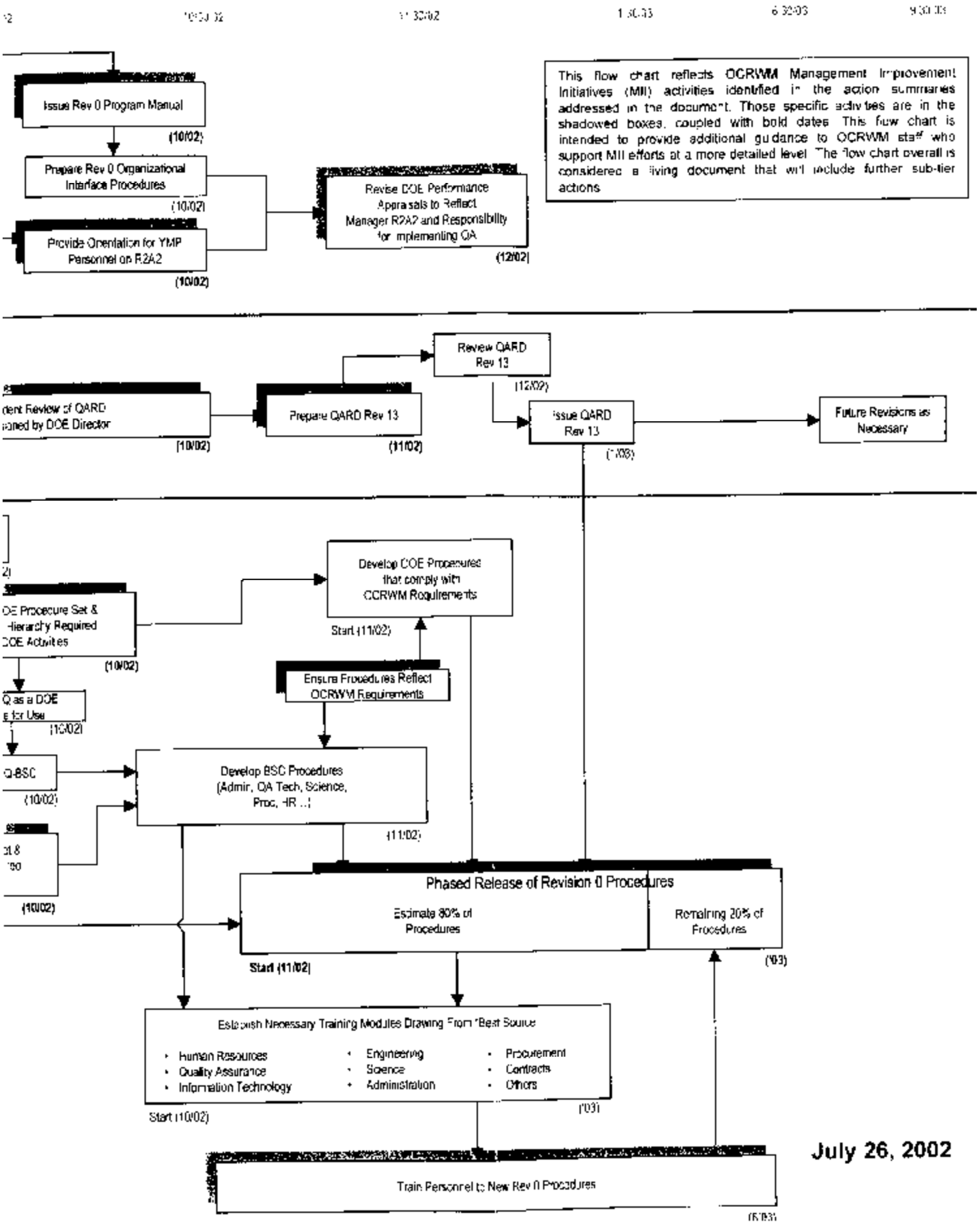
This flow chart reflects OCRWM Management Improvement Initiatives (MII) activities identified in the action summaries addressed in the document. Those specific activities are in the shadowed boxes, coupled with bold dates. This flow chart is intended to provide additional guidance to OCRWM staff who support MII efforts at a more detailed level. The flow chart overall is considered a living document that will include further sub-tier actions.
Issue Rev 0 Program Manual
(10/02)
Prepare Rev 0 Organizational Interface Procedures
(10/02)
Provide Orientation for YMP Personnel on R2A2
(10/02)
Revise DOE Performance Appraisals to Reflect Manager R2A2 and Responsibility for Implementing QA
(12/02)
Review QARD Rev 13
(12/02)
Prepare QARD Rev 13
(11/02)
Issue QARD Rev 13
Future Revisions as Necessary
Develop DOE Procedures that comply with OCRWM Requirements
Start (11/02)
Ensure Procedures Reflect OCRWM Requirements
Develop BSC Procedures (Admin, QA Tech, Science, Proc, HR ...)
(11/02)
(10/02)
Phased Release of Revision 0 Procedures
Estimate 80% of Procedures
Remaining 20% of Procedures
(/03)
Start (11/02)
Establish Necessary Training Modules Drawing From Best Source
Human Resources
Quality Assurance
Information Technology
Engineering
Science
Administration
Procurement
Contracts
Others
(/03)
Start (10/02)
Train Personnel to New Rev 0 Procedures
(6/03)

July 26, 2002

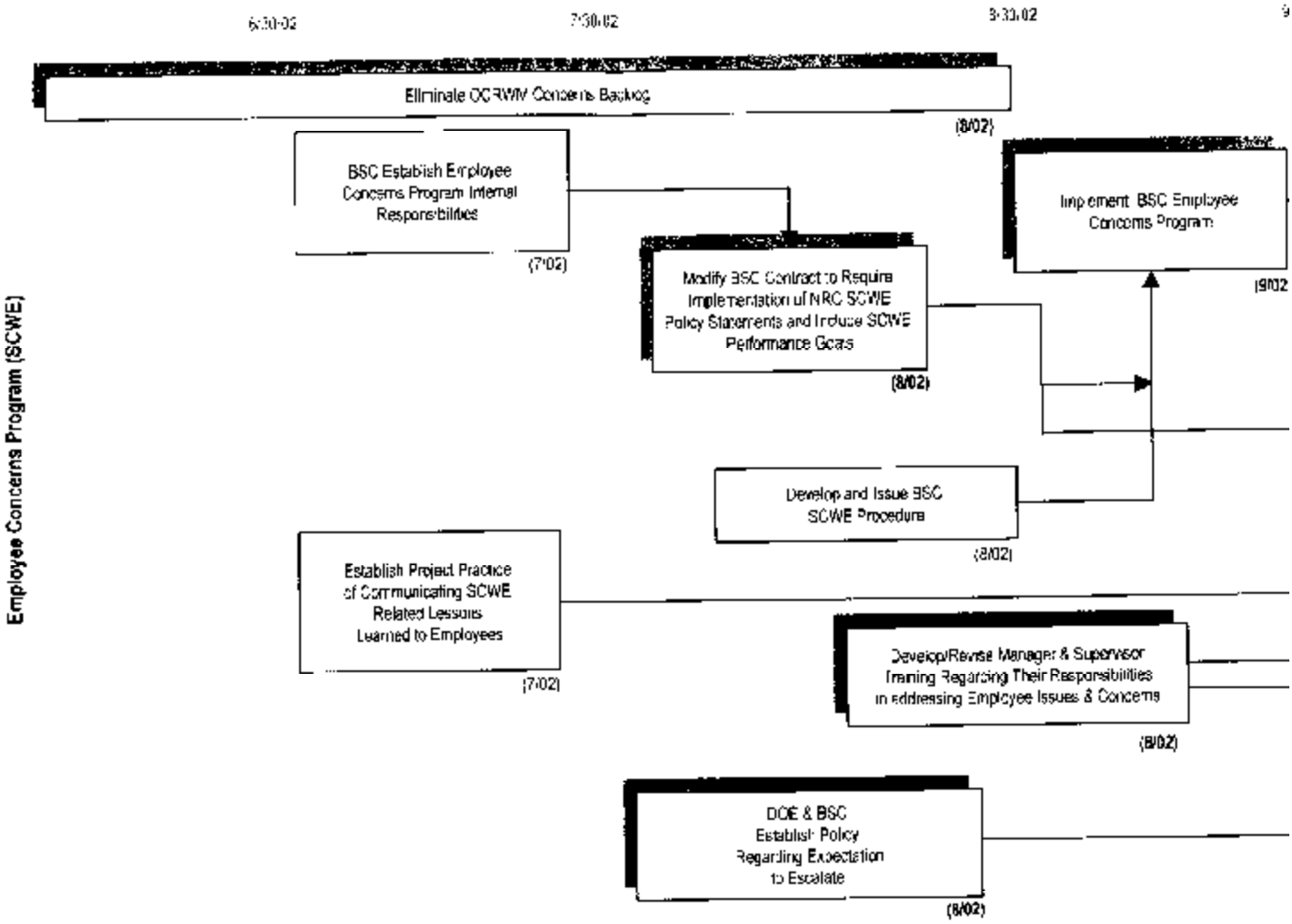
6/30/02
7/30/02
8/30/02
Employee Concerns Program (SCWE)
Eliminate OCRWM Concerns Backlog
(8/02)
BSC Establish Employee Concerns Program Internal Responsibilities
(7/02)
Modify BSC Contract to Require Implementation of NRC SCWE Policy Statements and Include SCWE Performance Goals
(8/02)
Implement BSC Employee Concerns Program
(9/02
Develop and Issue BSC SCWE Procedure
(8/02)
Establish Project Practice of Communicating SCWE Related Lessons Learned to Employees
(7/02)
Develop/Revise Manager & Supervisor Training Regarding Their Responsibilities in addressing Employee Issues & Concerns
(8/02)
DOE & BSC Establish Policy Regarding Expectation to Escalate
(8/02)

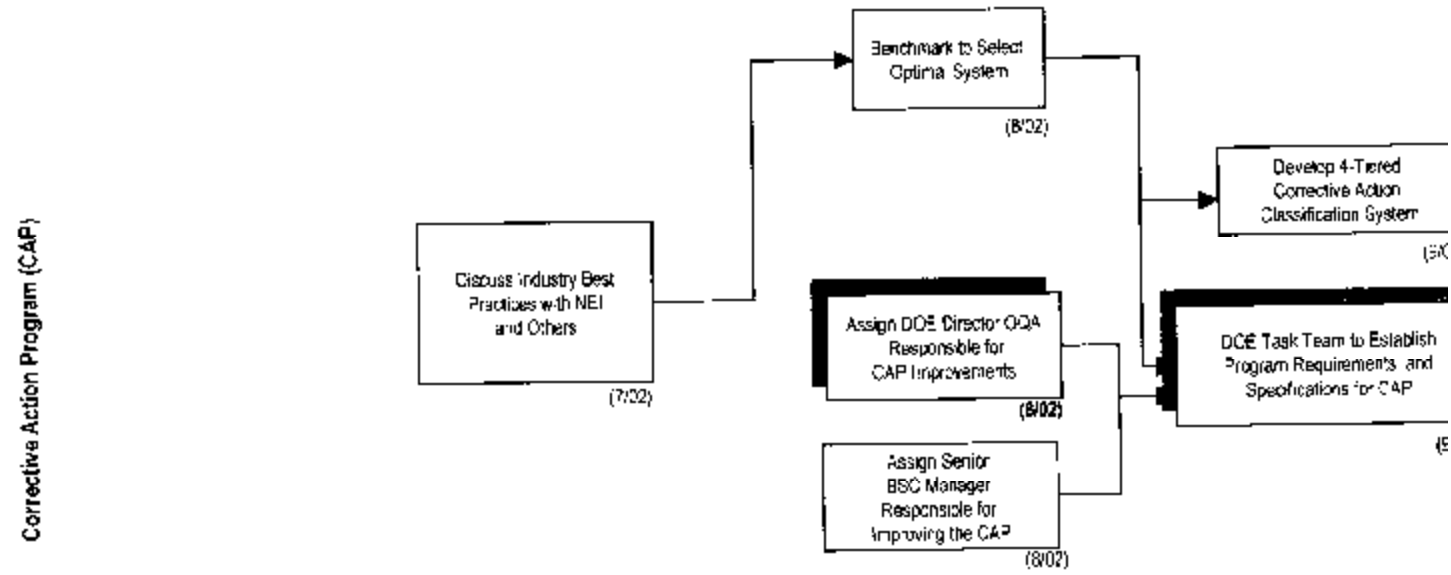
Corrective Action Program (CAP)
Discuss Industry Best Practices with NEI and Others
(7/02)
Benchmark to Select Optimal System
(8/02)
Develop 4-Tiered Corrective Action Classification System
Assign DOE Director OQA Responsible for CAP Improvements
(8/02)
Assign Senior BSC Manager Responsible for Improving the CAP
(8/02)
DOE Task Team to Establish Program Requirements and Specifications for CAP

This flow chart reflects OCRWM Management Improvement Initiatives (MII) activities identified in the action summaries addressed in the document. Those specific activities are in the shadowed boxes, coupled with bold dates. This flow chart is intended to provide additional guidance to OCRWM staff who support MII efforts at a more detailed level. The flow chart overall is considered a living document that will include further sub-tier actions.

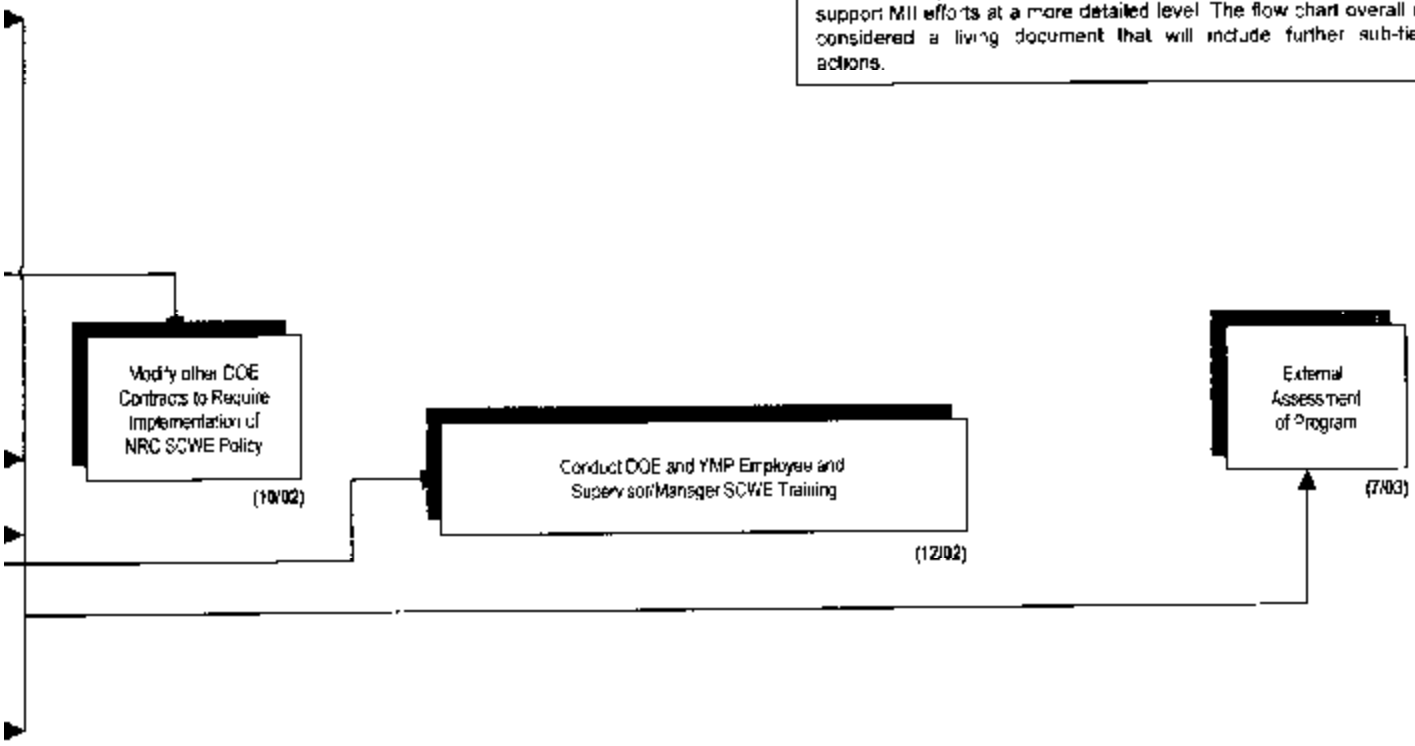

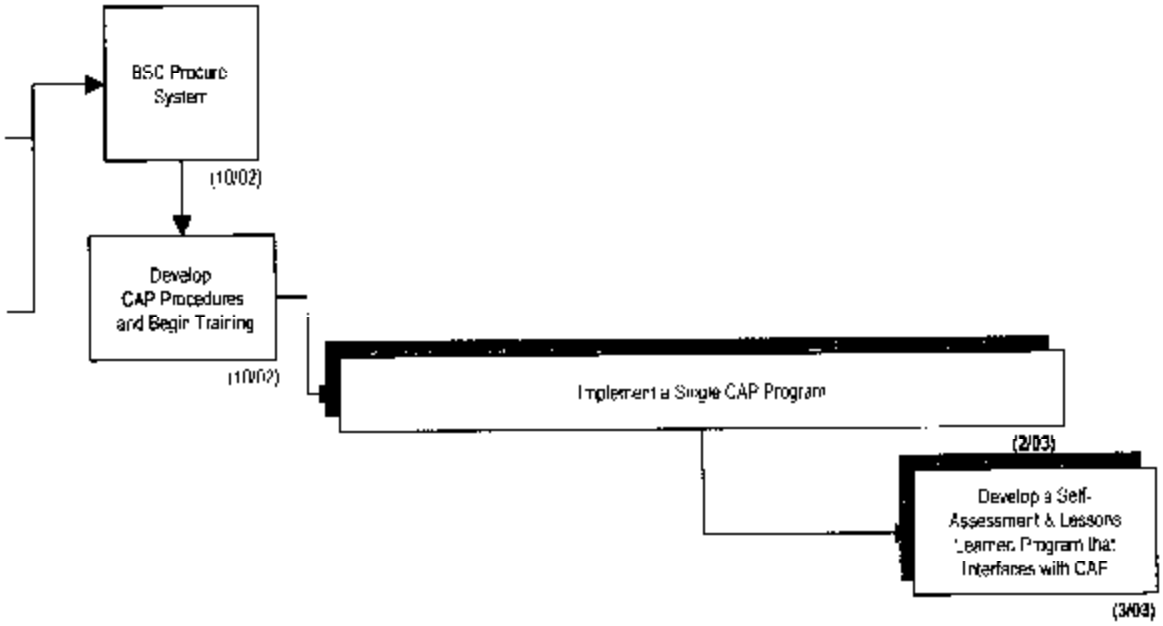

July 26, 2002