10.0 ENVIRONMENTAL PROTECTION

10.1 PURPOSE OF REVIEW

The purpose of this review is to determine whether an applicant for the construction and operation of a mixed oxide (MOX) fuel fabrication facility has established environmental protection measures that are adequate to protect public health and the environment and comply with the regulatory requirements imposed by the Commission in 10 CFR Parts 20, 51, and 70.

In addition, pursuant to 10 CFR Part 51, the NRC will determine if the applicant has submitted an environmental report that is adequate for NRC use in preparation of an Environmental Impact Statement (EIS) for licensing a MOX fuel fabrication facility, including the construction approval. This determination will be coordinated through the Division of Waste Management (DWM) since on May 17, 1999, the Office of Nuclear Material Safety and Safeguards (NMSS) assigned DWM the responsibility to prepare each NMSS EIS. As a result, guidance for reviewing an environmental report used to prepare an EIS is not provided in this chapter.

The Division of Fuel Cycle Safety and Safeguards currently retains the responsibility for determining if, pursuant to 10 CFR Part 51, an environmental report is adequate to support a licensing action that will result in the preparation of an Environmental Assessment (EA) and a Finding of No Significant Impact (FONSI). However, this type of licensing action is not anticipated until after the MOX fuel fabrication facility is licensed to possess and use special nuclear material (SNM). Staff should contact DWM for coordination and guidance and refer to the supplementary guidance in Appendix F to this Standard Review Plan (SRP).

10.2 RESPONSIBILITY FOR REVIEW

Primary: Environmental Engineer/Scientist

Secondary: Project Manager

Supporting: Health Physicist Reviewer
Chemical Safety Reviewer
Primary Reviewer of SRP Chapter 15.0
Environmental Protection Inspector

10.3 AREAS OF REVIEW

Regulatory requirements for environmental protection are contained in 10 CFR Parts 20, 51, and 70. The NRC staff environmental review under Parts 20 and 70 is focused on that part of the applicant's facility-wide safety program that is established to control and assess the level of radioactive releases (gaseous, liquid, and solid) to the environment during normal and anticipated operations. Therefore, the effluent control portion of the applicant's radiation protection program, as well as effluent and environmental monitoring practices, are reviewed.

Environmental Protection

This review complements the review conducted under Section 9.2 of this SRP, which addresses the radiation protection program as it applies to worker safety.

An applicant engaged in the fabrication of MOX fuel must perform an integrated safety analyais (ISA) in accordance with Subpart H of 10 CFR Part 70, and submit an ISA Summary in accordance with 10 CFR 70.65. Guidance on the ISA is covered in Chapter 5.0 of this SRP. The environmental review of the ISA Summary should include the identified potential accident sequences that result in radiological releases to the environment, the items relied on for safety (IROFS) that are specified by the applicant to reduce the risk of these accidents, and the associated management measures that provide reasonable assurance that the IROFS will perform their designated safety functions as required by 10 CFR Part 70.

Thus, environmental protection includes three main components: (1) the radiation protection program, (2) effluent and environmental monitoring for normal and off-normal operations, and (3) the ISA Summary and other ISA documentation, as necessary.

Areas of review for each of these components should include:

A. Radiation Safety

   i. As Low As Reasonably Achievable (ALARA) goals for effluent control;
   ii. Effluent controls to maintain public doses ALARA;
   iii. ALARA reviews and reports to management; and
   iv. Waste minimization practices, and for new operations, design plans for waste minimization.

B. Effluent and Environmental Monitoring

   i. In-place filter testing procedures for air cleaning systems;
   ii. Known or expected concentrations of radionuclides in effluents;
   iii. Physical and chemical characteristics of radionuclides in discharges;
   iv. Discharge locations;
   v. Environmental media to be monitored and the sample locations;
   vi. Sampling collection and analysis procedures, including the minimum detectable concentrations of radionuclides, equipment used, and calibration information;
   vii. Action levels and actions to be taken when the levels are exceeded;
   viii. Permits, including air discharge and National Pollutant Discharge and Elimination System permits;
   ix. Leak detection systems for ponds, lagoons, and tanks;
   x. Pathways analysis methods to estimate public doses;
   xi. Recording and reporting procedures, including event notification; and
   xii. Solid waste handling and disposal programs.

C. Safety Assessment of the Design Basis or Safety Program Description and ISA Summary

The safety assessment of the design basis (construction approval review) or the Safety Program Description and ISA Summary (application for a license to possess and use SNM) address similar material, as follows:

i. Accident sequences (and associated facility processes) which, if unmitigated, result in releases to the environment;

ii. Likelihood and consequences of these accident sequences;

iii. Safety controls relied on to reduce the unmitigated risk from high to an acceptable level; and

iv. Availability and reliability of safety controls.

10.4 ACCEPTANCE CRITERIA

10.4.1 Regulatory Requirements

A. 10 CFR Part 20, specifically the effluent control and treatment measures necessary to meet the dose limits and dose constraints for members of the public specified in Subparts B, D, and F; the requirements for minimization of contamination specified in 10 CFR 20.1406; the survey requirements specified in Subpart F; the waste disposal requirements of Subpart K; the records requirements of Subpart L; and the reporting requirements of Subpart M.

B. 10 CFR Part 51, specifically requiring the applicant to establish effluent and environmental monitoring systems to provide the information required by 10 CFR 51.60(a).

C. 10 CFR Part 51, specifically requiring the applicant to submit an environmental report as required by 10 CFR 51.60(b), or to support a categorical exclusion as described in 10 CFR 51.22(c).

D. 10 CFR Part 70, requiring the application to demonstrate that proposed facilities and equipment, including measuring and monitoring instruments and devices for the disposal of radioactive effluents and wastes, are adequate to protect public health and the environment as specified in 10 CFR 70.22(a)(7).

E. 10 CFR Part 70, requiring the application for a plutonium processing facility as defined in 10 CFR 70.4 to include a safety assessment of the design basis of the principal structures, systems, and components of the facility, including provisions for protection against natural phenomena, as specified in 10 CFR 70.22(f).

F. 10 CFR Part 70, requiring an application for a facility to fabricate MOX fuel to include an ISA Summary that lists the IROFS established by the applicant and other elements as described in 10 CFR 70.65(b).

10.4.2 Regulatory Guidance

Regulatory guidance for environmental protection is contained in:

A. American Nuclear Standards Institute (ANSI). ANSI–N13.1–1982, "Guide to Sampling Airborne Radioactive Materials in Nuclear Facilities."

B. ———. ANSI–N42.18–1980, "Specification and Performance of On-site Instrumentation for Continuously Monitoring Radioactive Effluents."

C. National Council on Radiation Protection and Measurements (NCRPM) Report No. 123, "Screening Models for Releases of Radionuclides to Atmosphere, Surface Water, and Ground." January 1996.

D. Nuclear Regulatory Commission (U.S.) (NRC). Information Notice 94–07, "Solubility Criteria for Liquid Effluent Releases to Sanitary Sewerage Under the Revised 10 CFR Part 20." NRC: Washington, D.C. January 28, 1994.

E. ———. Information Notice 94–23: "Guidance to Hazardous, Radioactive and Mixed Waste Generators on the Elements of a Waste Minimization Program." NRC: Washington, D.C. March 1994.

F. ———. Regulatory Guide (RG) 4.5, "Measurements of Radionuclides in the Environment Sampling and Analysis of Plutonium in Soil." NRC: Washington, D.C. May 1974.

G. ———. RG 4.15, Revision 2, "Quality Assurance for Radiological Monitoring Programs (Normal Operations)—Effluent Streams and the Environment." NRC: Washington, D.C.

H. ———. RG 4.16, Revision 2, "Monitoring and Reporting Radioactivity in Releases of Radioactive Materials in Liquid and Gaseous Effluents from Nuclear Fuel Processing and Fabrication Plants and Uranium Hexafluoride Production Plants." NRC: Washington, D.C.

I. ———. RG 4.20, "Constraint on Releases of Airborne Radioactive Materials to the Environment for Licensees Other than Power Reactors." NRC: Washington, D.C. December 1996.

J. ———. RG 8.37, "ALARA Levels for Effluents from Materials Facilities." NRC: Washington, D.C. July 1993.

10.4.3 Regulatory Acceptance Criteria

A. Radiation Safety

In accordance with 10 CFR 20.1101, each licensee must implement a radiation protection program, which is discussed in detail in Chapter 9.0 of this SRP. The environmental review of the radiation protection program focuses on the applicant's methods to maintain public

doses ALARA in accordance with 10 CFR 20.1101. NRC guidance on compliance with these regulations can be found in Regulatory Guide 8.37, "ALARA Levels for Effluents from Materials Facilities," July 1993.

Specifically, 10 CFR 20.1101(d) requires the applicant to establish a constraint on air emissions of radioactive material to the environment, excluding Radon-222 and its decay products, such that the individual member of the public likely to receive the highest dose will not be expected to receive a total effective dose equivalent (TEDE) in excess of 0.1 mSv (10 mrem) per year from these emissions. The applicant must have procedures to report to the NRC in accordance with 10 CFR 20.2203 when this dose constraint is exceeded and to take prompt appropriate corrective action to ensure against recurrence. NRC guidance on compliance with this regulation can be found in Regulatory Guide 4.20, "Constraint on Releases of Airborne Radioactive Materials to the Environment for Licensees Other Than Power Reactors," December 1996.

The environmental review of the radiation protection program also focuses on the applicant's waste minimization practices. Applicants for new licenses are required to comply with 10 CFR 20.1406, which states that the applicant must describe how facility design procedures for operation will minimize, to the extent practical, contamination of the facility and the environment, facilitate eventual decommissioning, and minimize, to the extent practical, the generation of radioactive waste. Applicants requesting amendment or renewal of existing licenses must minimize and control waste generation during operations as part of the radiation protection program in accordance with 10 CFR 20.1101 [62 FR 39082].

Guidance for waste minimization programs can be found in NRC Information Notice 94–23, "Guidance to Hazardous, Radioactive and Mixed Waste Generators on the Elements of a Waste Minimization Program," March 25, 1994.

The proposed radiation protection program is acceptable if, in addition to the acceptance criteria outlined in Section 9.2, it satisfies the following criteria:

i. Radiological (ALARA) Goals for Effluent Control

   ALARA goals for effluent control are set at a modest fraction (10% to 20%) of the values in Appendix B, Table 2, Columns 1 and 2 and Table 3 and the external exposure limit in 10 CFR 20.1302(b)(2)(ii), or the dose limit for members of the public, if the applicant proposes to demonstrate compliance with 10 CFR 20.1301 through a calculation of the TEDE to the individual likely to receive the highest dose.

   An applicant's constraint approach is acceptable if it is consistent with guidance found in Regulatory Guide 4.20 and the applicant's description of the constraint approach provides sufficient detail to demonstrate specific application of the guidance to proposed routine operations and nonroutine operations, including anticipated events.

ii. Effluent Controls To Maintain Public Doses ALARA

The applicant describes and commits to using effluent controls (e.g., procedures, engineering controls, and process controls) to maintain public doses ALARA. Common control practices include filtration, encapsulation, adsorption, containment, recycling, leakage reduction, and the storage of materials for radioactive decay. The applicant demonstrates a commitment to reducing unnecessary exposure to members of the public and releases to the environment.

Effluent controls during normal and likely facility conditions:

a. Are capable of handling the expected volume of potentially radioactive waste.

b. Are compartmentalized to reduce the potential for cross-contamination. For example, storm water and sanitary sewage lines should be separate from lines carrying radioactive effluents. Laundry facilities and personnel decontamination facilities should send effluents to radioactive waste. There should be no means by which radioactive waste can bypass the effluent controls and be directly released to the environment.

c. Are capable of safe shutdown, consistent with the operating status of the facility.

d. Are capable of safely handling the chemical characteristics of the effluent. For example, effluent controls in contact with strong acids or caustics should be corrosion resistant.

e. Achieve a decontamination factor for each radionuclide sufficient to reduce the total radioactivity to an acceptable release level on a "once" through treatment basis. Provisions are made to recirculate effluents for further decontamination when radioactivity is above an acceptable release level.

iii. ALARA Reviews and Reports to Management

As part of the annual review of the content and implementation of the radiation protection program as discussed in Section 9.2, the applicant commits to reviewing the effluent controls to maintain public doses ALARA. This review includes analysis of trends in release concentrations, environmental monitoring data, and radionuclide usage; determines whether operational changes are needed to achieve the ALARA effluent goals; and evaluates all designs for system installations or modifications. The applicant also includes a commitment to report the results to senior management along with recommendations for changes in facilities or procedures that are necessary to achieve ALARA goals.

iv. Waste Minimization

The application contains a description of how facility design and procedures for operation will minimize, to the extent practical, contamination of the facility and the environment and minimize, to the extent practical, the generation of radioactive waste. A waste minimization programs is acceptable if it includes:

a. Top management support;

b. Identification of responsibilities for waste minimization activities and assessments;

c. Methods to characterize waste generation, including types and amounts, and waste management costs, including costs of regulatory compliance, paperwork, transportation, treatment, storage, disposal, etc.;

d. Periodic waste minimization assessments to identify waste minimization opportunities and solicit employee or external recommendations;

e. Provisions for technology transfer to seek and exchange technical information on waste minimization;

f. Provisions to incorporate operational experience; and

g. Methods for implementation and evaluation of waste minimization recommendations.

B. Effluent and Environmental Monitoring

The applicant is required to make, or cause to be made, as appropriate, surveys of radiation levels in unrestricted and controlled areas and radioactive material in effluents released to unrestricted and controlled areas to demonstrate compliance with the dose limits for individual members of the public as described in 10 CFR 20.1301. Accordingly, the staff's acceptance criteria for the applicant's effluent and environmental monitoring for normal and off-normal operations are described in Sections 10.4.3(B)(i) and 10.4.3(B)(ii).

i. Effluent Monitoring

The reviewer should find that the applicant's effluent monitoring is acceptable if it meets the following criteria:

a. The known or expected concentrations of radioactive materials in airborne and liquid effluents are below the limits in 10 CFR Part 20, Appendix B, Table 2 or below site-specific limits established in accordance with § 20.1302(c) and are ALARA.

If, in accordance with § 20.1302(c), the applicant proposes to adjust the effluent concentrations in Appendix B to 10 CFR Part 20 to take into account the actual physical and chemical characteristics of the effluents, the applicant provides

information related to aerosol size distributions, solubility, density, radioactive decay equilibrium, and chemical form. This information is complete and accurate for the radioactive materials to justify the derivation and application of the alternative concentration limits.

b. If the licensee proposes to demonstrate compliance with 10 CFR 20.1301 through a calculation of the TEDE to the individual likely to receive the highest dose in accordance with 10 CFR 20.1302(b)(1), calculation of the TEDE by pathways analyses uses appropriate models and codes and assumptions that accurately represent the facility, the site, and the surrounding area; assumptions are reasonable; input data is accurate; all applicable pathways are considered; and the results are interpreted correctly.

   NCRP Report No. 123, "Screening Models for Releases of Radionuclides to Atmosphere, Surface Water, and Ground," January 1996, provides acceptable methods for calculating the dose from radioactive effluents. Computer codes are acceptable tools for pathways analysis if the applicant is able to show that the code has undergone validation and verification to demonstrate the validity of estimates developed using the code for established input sets. Dose conversion factors used in the pathways analyses are acceptable if they are based on the methodology described in International Council on Radiation Protection 30, "Limits for Intakes of Radionuclides by Workers," as reflected in Federal Guidance Report 11. Such methods are acceptable for determining the dose to the maximally exposed individual during normal facility operations and anticipated events.

c. All liquid and airborne effluent discharge locations are identified and monitored. Monitoring locations are identified, and for those effluent discharge points that have input from two or more contributing sources within the facility, sampling each contributing source is evaluated for effective effluent control.

d. Airborne effluents from all routine operations and nonroutine operations, as well as anticipated events associated with the facility, including effluents from areas not used for processing special nuclear material such as laboratories, experimental areas, storage areas, and fuel element assembly areas, are continuously sampled.

   Effluents are sampled unless the applicant has established, by periodic sampling or other means, that radioactivity in the effluent is insignificant and will remain so. In such cases, the effluent is sampled at least quarterly to confirm that effluents are not significant. For the purposes of this SRP, an effluent is significant if the concentration averaged over a calendar quarter is equal to 10% or more of the appropriate concentration listed in Table 2 of Appendix B to 10 CFR Part 20.

e. The sample collection and analysis methods and frequencies are appropriate for the effluent medium and the radionuclide(s) being sampled. Sampling methods provide reasonable assurance that representative samples are obtained by use of appropriate sampling equipment and sample collection and storage procedures. For

liquid effluents, representative samples are taken at each release point for the determination of concentrations and quantities of radionuclides released to an unrestricted area, including discharges to sewage systems. For continuous releases, samples are continuously collected at each release point. For batch releases, a representative sample of each batch is collected. If periodic sampling is used in lieu of continual sampling, the applicant shows that the samples are representative of actual releases. Monitoring instruments are calibrated at least annually, or more frequently if suggested by the manufacturer.

f. Radionuclide specific analyses are performed on selected composited samples unless either:

- The gross alpha and gross beta activities are so low that individual radionuclides could not be present in concentrations greater than 10 % of the concentrations specified in Table 2 or 3 of Appendix B to 10 CFR Part 20; or

- The radionuclide composition of the sample is known through operational data, such as the composition of the feed material.

Monitoring reports in which estimates of quantities of individual radionuclides are based on methods other than direct measurement include an explanation and justification of how the results were obtained.

Examples of cases in which operational data may not be adequate for the determination of radionuclide concentration are (1) facilities processing uranium in which extraction, ammonium diuranate precipitation, ion exchange, or other separation processes could result in concentration of thorium isotopes (principally Th-234); (2) facilities in which uranium of varying enrichments is processed; and (3) facilities processing plutonium in which significant variation in the Pu-238/Pu-239 ratio among batches and the continuous in-growth of Am-241 would preclude the use of feed material data to determine the radionuclide composition of effluents.

Radionuclide analyses are performed more frequently than usual under three circumstances: (1) at the beginning of the monitoring program until a predictable and consistent radionuclide composition in effluents is established; (2) whenever there is a significant unexplained increase in gross radioactivity in effluents; or (3) whenever a process change or other circumstance might cause a significant variation in the radionuclide composition.

g. The minimum detectable concentration (MDC) for sample analyses is not more than 5% of the concentration limits listed in Table 2 of Appendix B to 10 CFR Part 20. If the actual concentrations of radionuclides in samples are known to be higher than 5% of the 10 CFR Part 20 limits, the analysis methods need only be adequate to measure the actual concentration. However, in such cases, the MDC is low enough to accommodate fluctuations in the concentrations of the effluent and the uncertainty of the MDC.

h. The laboratory quality control (QC) procedures are adequate to support the validity of the analytical results. These QC procedures include the use of established standards such as those provided by the National Institute of Standards and Technology, as well as standard analytical procedures, such as those established by the National Environmental Laboratory Accreditation Conference.

i. The proposed action levels, and actions to be taken if the action levels are exceeded, are appropriate. The action levels are incremental, such that each increasing action level results in a more aggressive action to assure and control effluents. A slightly higher than normal concentration of a radionuclide in effluent triggers an investigation into the cause of the increase. An action level is specified that will result in the shutdown of an operation if this level is exceeded. These action levels are selected based on the likelihood that a measured increase in concentration could indicate potential violation of the effluent limits.

j. The descriptions of applicable Federal and/or State standards for discharges and any permits issued by local, State, or Federal governments for gaseous and liquid effluents are complete and accurate.

k. The systems for the detection of leakage from ponds, lagoons, and tanks are adequate to detect and assure against any unplanned releases to groundwater, surface water, or soil.

l. Releases to sewer systems are controlled and maintained to meet the requirements of 10 CFR 20.2003, including (i) the material is water soluble; (ii) known or expected discharges meet the effluent limits of 10 CFR 20 Appendix B, Table 3; and (iii) the known or expected total quantity of radioactive material released into the sewer system in a year does not exceed 5 Ci (185 GBq) of ^{3}H, 1 Ci (37 GBq) of ^{14}C, and 1 Ci (37 GBq) of all other radioactive materials combined. Solubility is determined in accordance with the procedure described in NRC Information Notice 94–07.

m. Reporting procedures comply with the requirements of 10 CFR 70.59 and the guidance specified in Regulatory Guide 4.16. Reports of the concentrations of principal radionuclides released to unrestricted areas in liquid and gaseous effluents are provided and include the MDC for the analysis and the error for each data point.

n. The applicant's procedures and facilities for solid and liquid waste handling, storage, and monitoring result in safe storage of the material and timely disposition.

ii. Environmental Monitoring

The applicant's environmental monitoring is acceptable if it is commensurate with the scope of activities at the facility and the expected impacts of operations as identified in the environmental report and if it meets the following criteria:

a. Background and baseline concentrations of radionuclides in environmental media have been established through sampling and analysis.

b. A preoperational monitoring program is initiated prior to operation. The preoperational program should be of sufficient length to allow an adequate database for comparison with operational data.

c. Monitoring includes sampling and analyses for important pathways for the anticipated types of radionuclides released from the facility into the environment from routine and nonroutine operations, including anticipated events. The pathways include air, surface water, groundwater, soil, sediments, and vegetation, as appropriate. Important environmental media are sampled to estimate radionuclide concentrations in important biota.

d. The description of monitoring identifies adequate and appropriate sampling locations and frequencies for each environmental medium, the frequency of sampling, and the analyses to be performed on each medium. Sampling methods ensure that representative samples are obtained by use of appropriate sampling equipment, sample collection, and sample storage procedures.

e. Monitoring procedures employ acceptable analytical methods and instrumentation to be used, and monitoring procedures and analytical methods are subject to quality controls. The applicant commits to a program of instrument maintenance and calibration appropriate to the instrumentation, as well as participation in round-robin measurement comparisons if the applicant proposes use of its own analytical laboratory for analysis of environmental samples.

f. Appropriate action levels and actions to be taken if the levels are exceeded are specified for each environmental medium and radionuclide.

   Action levels are selected based upon a pathways analysis that demonstrates that below those concentrations, doses to the public will be below the limits in 10 CFR Part 20, Subpart B, and are ALARA. The action levels specify the concentrations at which an investigation would be performed and levels at which process operations would be shut down.

g. MDCs are specified for sample analyses and are at least as low as those selected for effluent monitoring in air and water. MDCs for sediment, soil, and vegetation are selected based upon the action levels to ensure that sampling and analytical methods are sensitive and reliable enough to support application of the action levels.

h. Data analysis methods and criteria to be used for evaluating and reporting the environmental sampling results are appropriate and will indicate when an action level is being approached in time to take corrective actions.

i. The description of the status of all licenses, permits, and other approvals of facility operations required by Federal, State, and local authorities is complete and accurate.

j. Environmental monitoring is adequate to assess impacts to the environment from potential radioactive and nonradioactive releases as identified in high- and medium-risk accident sequences in the ISA.

C. Safety Assessment of the Design Bases and the Safety Program Description and ISA Summary

i. Safety Assessment of the Design Bases

In accordance with 10 CFR 70.22(f), an applicant for a MOX fuel fabrication facility is required to submit a safety assessment of the design bases to allow the NRC to make a determination regarding construction approval. The design bases includes the principal structures, systems, and components (SSCs) that the applicant has identified to protect against the consequences of accidents and natural phenomena. The applicant's safety assessment of the design bases should be acceptable in the area of environmental protection if:

a. Based on the level of design, the accidents analyzed in the applicant's safety assessment of the design bases, as described in Chapter 5.0, bound the types, consequences, and likelihoods of the accidents that could result in radiological releases to the unrestricted area.

b. The applicant used acceptable methods for estimating consequences from accident sequences that result in radiological releases to the environment. The estimates are bounding; assumptions necessary from the level of design are appropriately conservative. For the purposes of this review, consequences include dose to the public and the 24-hour averaged release of radioactive material outside the restricted area as defined in 10 CFR 70.61.

c. The applicant identified principal SSCs as part of the design bases that provide reasonable assurance that the applicant can construct a facility that will meet the performance requirements of 10 CFR 70.61.

ii. ISA Summary

As part of the license application for possession and use of SNM, pursuant to Subpart H to the 10 CFR Part 70, the applicant for a MOX fuel fabrication facility is required to submit a Safety Program Description and an ISA Summary. The ISA Summary includes IROFS identified to prevent or mitigate against accidents. The applicant's treatment of environmental protection in the Safety Program Description and ISA Summary (see Chapter 5.0 of this SRP) is acceptable if the applicant:

a. Provides a complete list of accident sequences that result in radiological releases to the unrestricted area.

b. Provides a reasonable estimate for the likelihood of each accident sequence identified.

c. Uses acceptable methods for estimating consequences from accident sequences that result in radiological releases to the environment. For the purposes of this review, consequences include dose to the public and the 24-hour averaged release of radioactive material outside the restricted area as defined in 10 CFR 70.61. Acceptable methods are described in NUREG/CR–6410, "Nuclear Fuel Cycle Facility Accident Analyses Handbook."

d. Identifies IROFS for each accident sequence that results in consequences greater than the limits defined in 10 CFR 70.61. The IROFS prevent or mitigate risk sequences to an acceptable level of protection.

e. Affords adequate levels of assurance to the IROFS to ensure that they will be reliable and available to perform their safety functions. This may be accomplished through configuration management, training, maintenance activities, or other management measures as appropriate.

10.5 REVIEW PROCEDURES

10.5.1 Acceptance Review

The primary reviewer should perform an acceptance review to determine if the application adequately addresses the items in Section 10.3, "Areas of Review," for either the construction approval review or the review for a license to possess and use SNM.

Guidance specific to the construction approval review and the review for a license to possess and use SNM is provided below.

A. Construction Approval

Specifically, the safety assessment of the design basis should address Section 10.3(C) consistent with the level of design. Sections 10.3(A) and (B) should be addressed to the extent that the material therein supports information provided in the environmental report, such as environmental monitoring as a mitigation measure. Where information is under development or not yet available, the applicant may use a commitment to providing the material with the application for a license to possess and use SNM in lieu of the actual material.

B. License To Possess and Use SNM

Specifically, the safety assessment of the license application should address Sections 10.3(A) through (C) in full.

If the primary reviewer verifies that environmental protection is adequately addressed (construction or license to possess and use SNM), the primary reviewer should accept the application for the safety evaluation in Section 10.5.2. If the primary reviewer identifies significant deficiencies in the material provided, the primary reviewer should request that the applicant submit additional information prior to the start of the safety evaluation.

10.5.2 Safety Evaluation

After determining that the application is acceptable for review in accordance with Section 10.5.1, the primary reviewer should perform a safety evaluation against the acceptance criteria described in Section 10.4. On the basis of its review, the staff may request that the applicant provide additional information or modify the application to meet those acceptance criteria.

Guidance specific to the construction approval review and the review for a license to possess and use SNM is provided below.

A. Construction Approval

The primary reviewer should establish that the applicant's facility design as described in the safety assessment of the design basis and other commitments, as they relate to environmental protection, meet or exceed the regulatory acceptance criteria in Section 10.4.3(C)(i).

As described in Appendix E to this SRP, the primary reviewer should coordinate with DWM during the preparation of the EIS.

B. License To Possess and Use SNM

The primary reviewer should establish that the applicant's facility design, operations, and chemical safety items provide reasonable assurance that they will function as intended and provide for the safe handling of licensed materials at the facility. The primary reviewer should identify the mechanisms that will allow the applicant to identify and correct potential problems.

In support of the primary reviewer for Chapter 9.0, the environmental protection reviewer should determine whether the acceptance criteria in Chapter 9.0 have been met as they relate to environmental review of the radiation protection program. The primary reviewer should also support the primary reviewer for Chapter 8.0 to ensure that the acceptance criteria for Chapter 8.0 have been met as they relate to effluent controls to maintain public doses ALARA.

In support of the primary reviewer for Chapter 5.0, the environmental reviewer should review the ISA Summary. All accident sequences identified in the ISA that can have significant consequences due to releases to the unrestricted area should be reviewed to determine that the list of potential accidents is complete and properly identified. Detailed review should only be conducted of the accident sequences which, when left unmitigated, are rated as "high-consequence" events by the applicant, as well as approximately 10% of the "intermediate-consequence" events and a smaller number of the lower risk sequences. However, additional "high-consequence" and "intermediate-consequence" events may be evaluated based on the results of the initial review.

The primary reviewer should provide input on the ISA Summary to the primary reviewer of Chapter 5.0 and input on management measures (if any) to the primary reviewer of Chapter 15.0.

In addition, for renewal and amendment applications, review of environmental protection by the primary reviewer will include coordination with the inspector responsible for environmental protection (supporting reviewer). Any comments or concerns that the inspector identifies will be addressed and resolved, and the Safety Evaluation Report (SER) (described in Section 10.6.1) for the licensing action will contain a statement indicating if the inspection staff has any objections to approval of the proposed licensing action. In addition, if applicable, the primary reviewer will review inspection reports and semiannual effluent reports submitted in accordance with 10 CFR 70.59 to assure licensee performance in environmental protection.

When the safety evaluation is complete, the primary reviewer, with assistance from the other reviewers, should prepare the environmental protection input for the SER as described in Section 10.6 using the acceptance criteria from Section 10.4.

10.6 EVALUATION FINDINGS

Documentation of the evaluation findings for the environmental protection review is contained in two types of products. The SER documents the review of the environmental protection measures and the design bases (construction approval) or the Safety Program Description and ISA Summary (license to possess and use SNM). The EA or EIS documents the staff's independent assessment of the environmental impacts of the proposed action.

Environmental protection measures may be summarized in the EA or EIS. However, the EA or EIS does not become part of the license. The primary reviewer should document the safety evaluation by preparing material suitable for inclusion in the SER. The primary reviewer should describe the review, explain the basis for the findings, and state the conclusions (see the supplementary guidance in Appendix E to this SRP).

If an EA or EIS was prepared for the licensing action, the date the document was issued should be reported in the environmental protection section of the SER. If the EA resulted in a FONSI, the FONSI's publication date in the *Federal Register* should be included in the SER. If an EIS was prepared, the SER would include the *Federal Register* publication date for the Record of

Decision. When applicable, the SER also documents the determination that an action meets a categorical exclusion.

The staff could document the safety evaluation for the construction approval review as follows:

The staff prepared an Environmental Impact Statement (EIS) on [publication date] for the construction approval for [insert name of facility]. Based on the EIS, the NRC stated in its Record of Decision [publication date in the Federal Register] that the preferred option was [state preferred option here].

For the preferred option, the staff reviewed the environmental protection measures for construction approval for [insert facility name] according to Chapter 10.0 of NUREG–1718. The staff evaluated [state what was evaluated] and found [state what was found]. The staff concluded that the applicant's design basis has adequate environmental protection measures to protect the public and the environment against natural phenomena and the consequences of potential accidents in accordance with the regulatory requirements imposed by the Commission in 10 CFR Part 70.

The staff could document the safety evaluation for the review for the license to possess and use SNM as follows:

The staff prepared an Environmental Impact Statement (EIS) on [publication date] for this licensing action as required by 10 CFR Part 51.20. Based on the EIS, the NRC stated in its Record of Decision [publication date in the Federal Register] that the preferred option was [state preferred option here].

For the preferred option, the staff reviewed the environmental protection measures for issuing a license to possess and use SNM for [insert facility name] according to Chapter 10.0 of NUREG–1718. The staff evaluated [state what was evaluated] and found [state what was found]. The staff concluded that the applicant has adequate environmental protection measures, including: (1) environmental and effluent monitoring and (2) effluent controls to maintain public doses ALARA as part of the radiation protection program to protect public health and the environment and comply with the regulatory requirements imposed by the Commission in 10 CFR Parts 20, 51, and 70.

10.7 REFERENCES

American National Standards Institute (ANSI). ANSI–N13.1–1982, "Guide to Sampling Airborne Radioactive Materials in Nuclear Facilities." ANSI: La Grange, Illinois. 1982

———. ANSI–N42.18–1980, "Specification and Performance of On-site Instrumentation for Continuously Monitoring Radioactive Effluents." ANSI: La Grange, Illinois. 1980

National Council on Radiation Protection and Measurements (NCRPM). Report No. 123 I & II, "Screening Models for Releases of Radionuclides to Atmosphere, Surface Water, and Ground." NCRPM: Bethesda, Maryland. January 1996.

Nuclear Regulatory Commission (U.S.), "Domestic Licensing of Special Nuclear Material (10 CFR Part 70)," *Federal Register:* Vol. 64, No. 146. pp. 41338–41357. July 30, 1999.

Nuclear Regulatory Commission (U.S.) (NRC). Information Notice No. 94–23, "Guidance to Hazardous, Radioactive and Mixed Waste Generators on the Elements of a Waste Minimization Program." NRC: Washington, D.C. March 25, 1994.

———. Information Notice No. 94–07, "Solubility Criteria for Liquid Effluent Releases to Sanitary Sewerage Under the Revised 10 CFR Part 20." NRC: Washington, D.C. January 28, 1994.

———. NUREG–1520, "Draft Standard Review Plan for the Review of a License Application for a Fuel Cycle Facility." NRC: Washington, D.C. April 1998.

———. NUREG/CR-6410, "Nuclear Fuel Cycle Facility—Accident Analysis Handbook." NRC: Washington, D.C. March 1998.

———. RG 3.52, Revision 2, "Standard Format and Content for the Health and Safety Sections of License Applications for Fuel Cycle Facilities." NRC: Washington, D.C. January 1995.

———. RG 4.15, Revision 1, "Quality Assurance for Radiological Monitoring Programs (Normal Operations)—Effluent Streams and the Environment." NRC: Washington, D.C. February 1979.

———. RG 4.16, Revision 1, "Monitoring and Reporting Radioactivity in Releases of Radioactive Materials in Liquid and Gaseous Effluents from Nuclear Fuel Processing and Fabrication Plants and Uranium Hexafluoride Production Plants." NRC: Washington, D.C. December 1985.

———. RG 4.20, "Constraint on Releases of Airborne Radioactive Materials to the Environment for Licensees other Than Power Reactors." NRC: Washington, D.C. December 1996.

———. RG 8.37, "ALARA Levels for Effluents from Materials Facilities." NRC: Washington, D.C. July 1993.

———. Rev. 6, "Materials Licensing Procedures Manual." NRC: NMSS/FCSS/Fuel Cycle Licensing Branch, Washington, D.C. April 1998.

11.0 PLANT SYSTEMS

11.1 PURPOSE OF REVIEW

The purpose of this review is to determine that the plant systems—systems that are identified as items relied on for safety (IROFS) pursuant to 10 CFR Part 70 and encompassed by the hazard and accident analyses of the integrated safety analysis (ISA)—will be available and reliable to perform their intended safety function when needed. Examples of plant systems are: (a) a ventilation system necessary to provide certain decontamination functions for normal, off-normal, and accident conditions and (b) an electrical distribution system necessary to support various IROFS.

11.2 RESPONSIBILITY FOR REVIEW

Primary: Discipline-specific engineers

Secondary: Chemical Process Engineer, Health Physicist, Fire Protection Specialist, Human Factors Engineer

Supporting: Primary Reviewers of SRP Sections 1.1 and 13.1 and Chapters 2.0, 3.0, 4.0 and 14.0
Primary Reviewers of Applicable Sections of Standard Review Plan (SRP) Chapter 15.0

11.3 AREAS OF REVIEW

The review for the construction approval should focus on the layout and design of the plant systems, their components, and any related information considering the present stage of the applicant's design process. The review for the license application should focus on design modifications and any other system features not adequately described during the construction approval review.

Also, the review for the licensee application for operations should encompass the adequacy of the design and operation of plant systems identified in the ISA Summary as IROFS such as electrical and ventilation systems.

The license application for operations documentation, to be reviewed by the staff, should include specific items listed below for each system. The documentation for construction approval should address the following items to the extent practical considering the stage of design information available.

A. Safety Function

i. Identification of safety function as related to the performance requirements of § 70.61 and the ISA; and

ii. Functional requirements stemming from the baseline design criteria (BDC) and the ISA process, including environmental design considerations (temperature, pressure, humidity, etc., resulting from normal, off-normal, and accident operating conditions) for IROFS with site factors (including natural phenomena that occur infrequently and conditions that are continuously present), defense-in-depth, reliability/availability goals (including continued operation of plant systems that perform essential utility services), and design features such as redundancy and independence (as appropriate) to ensure that reliability and availability goals are met.

B. System Description

i. Purpose (safety and nonsafety);

ii. System design, including performance features;

iii. Structures (including their materials, shielding, and physical protection) and components;

iv. Instrumentation and controls (manual and automatic);

v. System interfaces;

vi. Drawings (including arrangements, plans, elevations, and sections for structures), specifications, and procedures; and

vii. Assurance measures, including applicable industrial codes and standards, environmental qualification, quality assurance, inspection, testing, and maintenance.

C. Safety Analysis

i. How functional requirements are satisfied by system design;

ii. How nonsafety features, as appropriate, do not prevent the plant system from performing its intended safety function;

iii. How long-term performance, testing, and maintenance features are addressed;

iv. How potential failure modes are analyzed, including consideration of communication failures, common-mode failures, and human errors;

v. How material-related failure modes are analyzed to include the effects of corrosion, erosion, and fatigue under normal, off-normal, and accident conditions; and

vi. How data, information, and evaluations are developed as a result of site-related investigations, studies of historical data, and any newly developed information

addressing the geology, seismology, hydrology, meteorology, and geotechnical aspects of the site as well as site-proximity events considered as natural phenomena events (such as earthquakes, high winds, tornadoes, tornado missiles, and floods) and other external events (such as nearby transportation accidents, airplane crashes, and fires external to the facility) that may produce conditions that could influence the performance of plant facilities required to protect health and minimize danger to life or property.

Because the ISA results identify the IROFS that form the safety functions discussed above, the primary reviewer should also review the ISA Summary (see SRP Chapter 5.0) to determine which plant systems have been identified as IROFS, their safety categories, their assumed operating modes and conditions, the impact of their inoperability, and any related limiting operations or plant mode restrictions. The review should also encompass any additional assumptions used in ISA qualitative/quantitative evaluations related to performance requirements for plant systems, such as redundancy, independence, reliability, quality, etc.

11.4 ACCEPTANCE CRITERIA

As part of the application for construction approval, the applicant should commit to providing plant systems that meet or exceed the acceptance criteria in the following subsections of this SRP section.

11.4.1 Regulatory Requirements

The staff's requirements applicable to all plant systems are the following:

10 CFR Part 70.22, specifically relating to the requirement that the applicant is to provide a description of the equipment and facilities and propose procedures to protect health and minimize danger to life and property.

10 CFR Part 70.23, specifically relating to the requirement that the Commission determine that the proposed equipment, facilities, and procedures are adequate to protect health and minimize danger to life and property.

10 CFR Part 70.61(e), specifically relating to the requirement that each engineered or administrative control or control system that is needed to meet the performance requirements be designated as an item relied on for safety and relating to the safety program that ensures each item relied on for safety will be available and reliable to perform its intended function when needed.

10 CFR Part 70.62, specifically relating to the establishment and maintenance of a safety program and to the performance of an ISA.

10 CFR Part 70.64, specifically relating to the application of BDC and defense-in-depth practices to new facilities or new processes at existing facilities.

11.4.2 Electrical Systems

11.4.2.1 Regulatory Guidance

Staff and industry documents that may provide useful background information for consideration in the design of MOX fuel fabrication facilities are listed in Section 11.7.

11.4.2.2 Regulatory Acceptance Criteria

The reviewer should find the applicant's electrical systems' design and operation acceptable if they satisfy the requirements listed in Section 11.4.1. The requirements and guidelines for electrical systems are those related to the BDC and defense-in-depth. The electrical systems' design and operation should fulfill the functional requirements determined from the ISA, and the electrical systems should be available and reliable to perform their intended safety function when needed.

Typically, specific design considerations for electrical systems include two physically independent offsite power sources with redundant and independent onsite ac and dc power sources that should be designed with the following:

A. Provisions so that components of the electrical systems can be tested periodically for operability and required functional performance;

B. Electrical and physical separation to ensure that any required independence is maintained;

C. No single failure vulnerability;

D. Sufficient capacity and capability to ensure the IROFS supported by the electrical systems perform their intended functions;

E. Adequate protective relaying and breaker control to ensure required functional performance and adequate response to electrical fault/overload conditions;

F. Status monitoring of the behavior of the systems and components that are identified as IROFS;

G. System capability to maintain functionality when subjected to tornadoes, tornado missiles, earthquakes, floods, and any other appropriate severe natural phenomena as established in the ISA.

11.4.3 Instrumentation and Control Systems

11.4.3.1 Regulatory Guidance

Staff and industry documents that may provide useful background information for consideration in the design of MOX fuel fabrication facilities are listed in Section 11.7.

11.4.3.2 Regulatory Acceptance Criteria

The reviewer should find the applicant's instrumentation and control (I&C) systems' design and operation acceptable if they satisfy the requirements listed in Section 11.4.1. The requirements and guidelines for I&C systems are those related to the BDC and defense-in-depth. The I&C systems' design and operation should fulfill the functional requirements determined from the ISA, and the I&C systems should be available and reliable to perform their intended safety function when needed.

Typically, specific design considerations for I&C systems include redundant and/or diverse instrument channels with coincident logic providing automatic actuation with additional manual operation capability. The instrument channels and associated logic should be designed with the following:

A. Provisions so that I&C system components can be tested periodically for operability and required functional performance;

B. Electrical, physical, and control/protection separation to ensure that any required redundancy and independence are maintained;

C. No single failure vulnerability;

D. Adequate instrument spans, setpoints, and control ranges to ensure proper monitoring and control of IROFS;

E. Provisions so that I&C system components fail in a safe failure mode;

F. Status monitoring of the behavior of the systems and components that are identified as IROFS;

G. System capability to maintain functionality when subjected to tornadoes, tornado missiles, earthquakes, floods, and any other appropriate severe natural phenomena as established in the ISA.

11.4.4 Cooling Water System

11.4.4.1 Regulatory Guidance

None.

11.4.4.2 Regulatory Acceptance Criteria

The reviewer should find the applicant's cooling water system's design and operation acceptable if they satisfy the requirements listed in Section 11.4.1. For cooling water systems identified in the ISA as items relied on for safety, the requirements and guidelines are those related to the BDC and defense-in-depth. The cooling water system's design and operation should fulfill the functional requirements determined from the ISA, and the cooling water system should be available and reliable to perform its intended safety function when needed.

Typically, specific design considerations for the cooling water system should demonstrate the following:

A. Transfer of heat loads to an appropriate heat sink under normal, off-normal, and accident conditions;

B. Adequate water supply under normal, off-normal, and accident conditions;

C. Adequate component redundancy; the capability to isolate components, systems, or piping for maintaining system safety function under varying system configuration; and the capability of integrated system control;

D. Supporting management measures (including tests and other verification methods) that ensure the structural integrity and system leak tightness (including the prevention of cross-contamination (radioactive and chemical)), the operability and adequate performance of active system components, and the capability of the system to perform required functions during normal and accident situations;

E. Capability for withstanding environmental hazards resulting from pipeline breaks and dynamic effects associated with flow instability and attendant loads such as water hammer or cavitation and measures to prevent such dynamic conditions from occurring;

F. Capacity and capability for detecting leaks and cross-contamination (radioactive and chemical), for inservice component inspection and system maintenance, and for operational functional testing of the system and its components;

G. System capability to maintain functionality when subjected to tornadoes, tornado missiles, earthquakes, floods, and any other appropriate severe natural phenomena as established in the ISA.

11.4.5 Ventilation Systems

11.4.5.1 Regulatory Guidance

Regulatory guidance for the MOX fuel fabrication facilities for implementing and satisfying the regulatory requirements and acceptance criteria for ventilation systems is provided in Nuclear Regulatory Commission (NRC) Regulatory Guide 3.12, "General Design Guide for Ventilation Systems of Plutonium Processing and Fuel Fabrication Plants."

Additional staff and industry documents that may provide useful background information for consideration in the design of MOX fuel fabrication facilities are listed in Section 11.7.

11.4.5.2 Regulatory Acceptance Criteria

The reviewer should find the applicant's ventilation systems' design and operation acceptable if they satisfy the requirements listed in Section 11.4.1, and the applicant has considered the relevant guidelines mentioned under Section 11.4.5.1. The requirements and guidelines for ventilation systems determined to be IROFS are those related to the BDC and defense-in-depth. The ventilation systems' design and operation should fulfill all of the functional requirements determined from the ISA, and the systems should be available with adequate reliability to perform all of their intended safety functions when needed.

Typically, specific design considerations for ventilation systems should include the following:

A. Confinement of radioactive contamination by zones and pressure differentials:

   i. Confinement of radioactive material is provided by multiple zones, with each zone bounded by barriers such as vessel, glovebox, building, and internal room walls.

   ii. The systems have the capability to direct ventilation air from areas of low radioactivity to areas of progressively higher radioactivity. Devices are provided to control and indicate pressure differentials between confinement zones. Alarms are provided to indicate when pressure differentials are not maintained in a prescribed range.

   iii. The systems have the capability to detect the need for isolation and to isolate portions of the systems relied on for safety in the event of failures or malfunctions elsewhere in the systems. The isolated systems have the capability to function under such conditions.

   iv. Supply air fans are interlocked with an exhaust air plenum pressure sensor to prevent supply fan operation unless the exhaust fans are running. This will prevent pressurization of any process room or area if exhaust ventilation fails.

B. Test, calibration, and inservice surveillance capabilities:

   i. Provisions are made so that components of ventilation systems can be tested periodically for operability and required functional performance. Provisions include

capability for periodic measurement of air flows in exhaust ducts and/or at equipment, hoods, and exhaust ducts.

ii. The capability is also provided to test, under conditions as close to design as practical, the operating sequence that would bring ventilation systems into action, including the transfer to alternate power sources and the design airflow delivery capability.

C. Redundancy of fans, dampers, and power supplies and no single failure vulnerability:

i. There are two automatically operated isolation dampers in series to separate nonessential portions of the system from essential portions.

ii. Essential components and subsystems are able to function in the event of loss of offsite power. In the event of failure of a single active component (equipment or control device) or loss of offsite power, the resulting systems flow capacity will not cause the loss of preferred direction of air flow from areas of low potential radioactivity to areas of higher potential radioactivity.

iii. The systems are capable of automatically actuating components not operating under normal conditions or actuating standby components (redundant equipment) in the event of failure or malfunction, as needed.

D. Sufficient capacity and capability:

i. The heating and cooling functions of the ventilation systems are sufficient to maintain a suitable temperature range in the areas serviced, assuming proper performance of equipment contained in those areas.

ii. Equipment identified as IROFS are capable of functioning under the worst anticipated ventilation systems' conditions.

iii. The systems are capable of preventing the accumulation of flammable or explosive gases from processes within the facility.

iv. The systems are capable of controlling airborne particulate material (dust) accumulation.

v. Ventilation systems are capable of operating during a normal power outage at capacities required to maintain confinement of contaminants.

E. Monitoring and alarms:

i. All exhausting ducts and stacks that may contain plutonium contaminants are provided with two monitoring systems: a continuous air monitoring system (CAMS) and a fixed sampler. The probes for sampling purposes are designed for isokinetic sampling and located to obtain representative samples. Each system is connected to an emergency power supply. The continuous stack sampler alerts cognizant personnel through an

audible and visual annunciator if the airborne radioactive effluents reach prescribed limits.

ii. Air monitoring and warning systems (including CAMS) are installed in areas where radioactive material is handled. Air sampling heads provide a representative of the potential airborne radioactivity being breathed.

iii. Duct runs and flow distributors assure uniform representative air flow past monitoring and sampling stations as well as through filter installations.

iv. Acceptance criteria for air monitoring and warning systems specific to radiation safety for design features, the radiation protection program, and effluent monitoring can be found in Sections 9.1.4.4.3(C), 9.2.4.5, and 10.4.3.B of this SRP.

F. Environmental qualification:

i. The ventilation systems, including detectors, monitoring systems, and controls, are qualified for all expected and credible severe environments in which the systems are expected to function.

G. Design for natural phenomena:

i. The ventilation systems are designed to maintain functionality when subjected to tornadoes, tornado missiles, earthquakes, floods, and any other appropriate severe natural phenomena as established in the ISA.

ii. Design considerations are also made for protection from offsite releases of toxic chemicals as a result of natural phenomena, if appropriate.

H. Fire protection and smoke control:

i. The ventilation systems are designed to withstand any credible fire and explosion and continue to act as confinement barriers.

ii. Ventilation systems are capable of operating during a fire in the areas they ventilate and safely handle products of combustion through appropriate ventilation channels. A supply air system remains operational; however, the option to discontinue air supply to the involved spaces is maintained.

iii. The materials of construction for the ventilation systems are fire resistant to protect against fires occurring within or outside the systems. Approved smoke and heat detectors are provided in the system.

I. Safe air supply to the control room and other occupied areas:

i. The ventilation systems confine and prevent uncontrolled release of radioactive aerosols, noxious fumes, and vapors into rooms and areas normally occupied by personnel.

ii. Provisions are made for continuous monitoring of recirculated air to occupied areas and diversion of contaminated air to a once-through exhaust system if allowable radiation standards are exceeded.

iii. The control room heating and cooling subsystems are capable of maintaining a suitable ambient temperature for control room personnel and equipment.

iv. Portions of the system are isolated in the event of fires, failures, and malfunctions.

v. The ventilation systems are capable of keeping essential equipment in the control room operational under the worst anticipated degraded conditions of the ventilation system.

vi. The control room ventilation has an internal recirculation filtering mode or can discharge airborne contaminants from the control room area using a once-through ventilation mode, as applicable.

J. Removal and replacement of filters and other expected maintenance designed to permit only minimum exposure of personnel to radioactivity:

i. Ventilation systems allow for routine in-place testing of high efficiency particulate air (HEPA) filtration systems.

ii. Potential doses from expected maintenance of ventilation systems can be minimized by providing ready access to the systems, by providing space to permit the activities to be accomplished expeditiously, by separating filter banks and components to reduce exposures to radiation from adjacent banks and components, and by providing sufficient space to accommodate auxiliary ventilation of shielding of components.

K. Gloveboxes and process enclosures:

i. Gloveboxes are constructed using high quality materials and workmanship to assure total containment and minimize leakage. Gloveboxes are constructed of noncombustible materials. (see Chapter 7.0 of this SRP).

ii. The design of enclosures is based on downdraft ventilation flow to minimize the spread of fire. Heat detectors and combustible gas and vapor detection meters are provided on gloveboxes or enclosures where fire or explosion hazards exist. An inerting environment or automatic suppression are provided in these boxes or enclosures. Where automatic suppression is not provided, fire detectors are installed and manual fire suppression capability provided. (See Chapter 7.0 of this SRP.)

iii. Small gloveboxes or enclosure systems supplied with gases under positive pressure have positive-acting pressure-relief devices (discharging into an exhaust system) to prevent overpressurization. Further, should these systems be recirculating, all necessary cleanup and detection equipment for noxious, corrosive, or explosive vapors or gases are considered.

iv. The minimum instrumentation for a glovebox or enclosure ventilation system includes devices to indicate the pressure differential between the box or enclosure and the surrounding work area, the filter resistance, and the exhaust flow rate from the box or enclosure. (The applicant should specify the maximum operable pressure differential.) When box operations are not in full-time attendance for a continuous process, a sensor is provided to monitor abnormal pressure or temperature and alarm at a point where cognizant personnel are stationed.

11.4.6 Civil-Structural Systems

Civil-structural systems include the buildings and support structures of the facilities that are to house, support, confine, or contain the various other plant systems, components, and equipment associated with licensed nuclear materials or hazardous chemicals associated with licensed nuclear materials that may adversely affect IROFS.

11.4.6.1 Regulatory Guidance

Industry standards that provide guidance for implementing and satisfying the regulatory requirements and acceptance criteria for civil-structural systems are:

American Society of Civil Engineers (ASCE). ASCE–1-82, "Guidelines for Design and Analysis of Nuclear Safety-Related Earth Structures."

———. ASCE–4-86, "Seismic Analysis of Safety-Related Nuclear Structures."

———. ASCE–7-95, "Minimum Design Loads for Buildings and Other Structures."

For most of the structural materials that will be utilized in the civil-structural systems, there are existing design codes or standards that are based on using allowable stresses or on using a strength approach with load or resistance factors. The list of industry codes and standards that may have been used by the applicant is provided below:

American Concrete Institute (ACI). 349-97, "Code Requirement for Nuclear Safety-Related Concrete Structures."

American Institute of Steel Construction (AISC). N690-84, "Specification for the Design, Fabrication, and Erection of Steel Safety-Related Structures for Nuclear Facilities."

Additional staff and industry documents that may provide useful background information for consideration in the design of MOX fuel fabrication facilities are listed in Section 11.7.

The governing building code should be considered as a guidance document in that it will prescribe absolute minimum parameters for the civil-structural systems independent of the facility requirements resulting from the ISA. Embedded within the building codes or other standards and documents that are incorporated by reference, there can be guidance regarding the design, analysis, construction, and testing portions of all of the elements for consideration described above. Listed below are the major national building codes that may become a single building code in 2000. One of these documents, or a local building code, will govern as the minimum requirement for all civil-structural systems at the facility. These building codes are listed below:

BOCA, Building Officials and Code Administrators International, Inc.

SBC, Southern Building Code Congress International, Inc.

UBC, International Conference of Building Officials

IBC, International Code Council, Inc. (to release the International Building Code 2000 that will replace the three major U.S. building codes)

11.4.6.2 Regulatory Acceptance Criteria

The reviewer should find the applicant's civil-structural systems' design and operation acceptable if they satisfy the requirements listed in Section 11.4.1, and the applicant has considered the relevant guidelines mentioned in Section 11.4.6.1. The requirements and guidelines for the civil-structural systems are those related to the BDC and defense-in-depth. The civil-structural systems' design and operation should fulfill all of the functional requirements determined from the ISA, and the systems should be available with adequate reliability to perform all of their intended safety functions when needed.

Typically, specific design considerations for civil-structural systems should include the following:

A. Site and environmental design conditions:

   The parameters defining the site and environmental conditions should be identified along with the magnitude or range of values that are to form part of the basis of the design for the structural systems that are IROFS based on the ISA results. The civil-structural systems to which these parameters are to be applied should be those that are involved in the prevention or mitigation of the consequences of any of the events, accidents, or conditions of operation that are identified as a result of the ISA and are therefore IROFS. These civil-structural systems would also include those that could affect systems and components that are IROFS. The basis; e.g., field observations and data, test data, analytical results, or other sources; for the parameters and the values being used should be provided. Some of the parameters may be deterministic while others may result from the ISA or other nondeterministic studies. For example, the return period or frequency of a specific site or environment-related design parameter should be reflected in, or derived from, the ISA.

B. Analytical models and material properties:

The analytical models that are used to represent the IROFS in the civil-structural systems in the analysis, evaluation, and design of those systems should be identified. The degree of sophistication and the level of detail in the models should reflect the ISA results in identifying the relative importance of the various civil-structural systems. Where several levels of model detail are used, the linkage and logic used to obtain reliable results should be identified. The bases of the specific models utilized should be provided. The material properties of the individual elements in the civil-structural systems should be provided, including the bases for the properties and the methods that will be used to assure that the range of the future as-built properties are adequately represented in the analysis, evaluation and design process.

C. Civil-structural systems classification and loading combinations:

Since many of the input parameters may occur simultaneously, there should be identifiable combinations that link these parameters in the form of the loading combinations defined for the facility and the various classes of civil-structural systems. These loading combinations should be linked to the ISA results. The resulting load combinations should be clearly identified as representing the unique set of loading functions for the facility at the site for the various classes of civil-structural systems. These form part of the design bases of the facility. In addition, the reviewer should verify that the minimum requirements of the governing building code for the facility have been incorporated into the design bases. The reviewer should verify the acceptability of the loading combinations and the classifications are consistent with the ISA results.

D. Design of civil-structural elements and systems:

The reviewer should verify that the application provides the bases for sizing the various structural elements and members of the civil-structural systems. This aspect of the design basis can be used to quantify the safety margins that may be provided based on the loads and load combinations identified as a result of the ISA for the various natural hazards, operational, and accident event scenarios. The reviewer should ascertain that these safety margins are consistent with the analysis in Chapter 5.0 of this SRP relative to the ISA that was performed.

E. Evaluation and verification:

The reviewer should that ensure that the civil-structural systems are adequately designed to maintain functionality when subjected to tornadoes, tornado missiles, earthquakes, floods, and any other appropriate severe natural phenomena as established in the ISA.

Overall, the reviewer must ensure that all the relevant parameters have been incorporated into the design, and that the design reflects the supplemental design bases of the other plant systems as well as the requirements of facility operations and the BDC. The reviewer should

ascertain that the final design as reflected in the construction documents has undergone a final structural evaluation, with the results being provided to verify that the ISA results are correct.

11.4.7 Material Transport System (Pumps and Valves)

11.4.7.1 Regulatory Guidance

Staff and industry documents that may provide useful background information for consideration in the design of MOX fuel fabrication facilities are listed in Section 11.7.

11.4.7.2 Regulatory Acceptance Criteria

The reviewer should find the design and operation of the material transport systems identified as IROFS acceptable if they satisfy the requirements listed in Section 11.4.1. The requirements and guidelines for such systems are those related to the BDC and defense-in-depth. The material transport system's design and operation should fulfill all of the functional requirements determined from the ISA, and the system should be available with adequate reliability to perform all of its intended safety functions when needed.

Typically, specific design considerations for the material transport system should demonstrate the following:

A. Adequate capacity exists to handle the expected volume of radioactive material during normal operating and accident conditions.

B. There is redundancy or diversity of components required to prevent the release of radioactive materials to the environment or needed for the safe operation of the material transport system.

C. The material transport system can be safely shut down during normal operations and accident conditions. Provisions for emergency power are included for critical process components.

D. Tank and piping systems are of welded construction to the fullest extent possible.

E. Tank and piping systems are designed to take advantage of gravity flow to reduce the potential for contamination associated with pumping and pressurization.

F. The design of the material transport system assures that accidental criticality will not occur under normal operating conditions or under credible accident conditions.

G. All system components expected to be in contact with strong acids or caustics are corrosion resistant.

H. Use of traps is avoided, and the piping is designed to minimize entrapment and buildup of solids in the system.

I. Systems and devices are evaluated to determine the need for hoods, gloveboxes, and shielding for personnel protection. Generally, wet processing operations involving gram quantities of plutonium and operations involving 50 micrograms or more of plutonium in respirable form are conducted in a glovebox. (See Chapter 9.0 of this SRP.)

J. Surface finishes in the work area are of materials that have satisfactory decontamination characteristics for their particular application.

K. Material transport systems are adequately designed to maintain functionality when subjected to tornadoes, tornado missiles, earthquakes, floods, and any other appropriate severe natural phenomena as established in the ISA.

11.4.8 Heavy Lift Cranes

11.4.8.1 Regulatory Guidance

Staff and industry documents that may provide useful background information for consideration in the design of MOX fuel fabrication facilities are listed in Section 11.7.

11.4.8.2 Regulatory Acceptance Criteria

The reviewer should find the design and operation of cranes for lifting heavy loads acceptable if they satisfy the requirements listed in Section 11.4.1. The requirements and guidelines for heavy lift cranes identified as IROFS are those related to the BDC and defense-in-depth. The design and operation of heavy lift cranes should fulfill all of the functional requirements determined from the ISA, and the heavy lift cranes should be available with adequate reliability to perform all of their intended safety functions when needed.

Typically, specific design considerations for heavy lift cranes should demonstrate the following:

A. The handling equipment is designed in accordance with the American National Standard for Overhead and Gantry Cranes (Top Running Bridge, Single or Multiple Girder, Top Running Hoist), American National Standards Institute/American Society of Mechanical Engineers (ANSI/ASME) ANSI/ASME–B30.2–1983 and the American National Standard for Overhead Hoists, ANSI/ASME–B30.16–1987.

B. The purchase of equipment and materials is based on the codes and standards which represent a level of capability to meet the design requirements specified in American National Standard Lightning Protection Code, American National Standards Institute/National Fire Protection Association (ANSI/NFPA) ANSI/NFPA–78–1986, and the Specifications for Overhead Traveling Cranes, Crane Manufacturers Association of America (CMAA) Specification 70.

C. Cranes capable of carrying heavy loads are prevented, preferably by design rather than by interlocks, from moving over safety and containment systems.

D. Cranes are designed to provide single failure-proof handling of heavy loads, so that a single failure will not result in loss of capability of the crane-handling system to perform its safety function.

E. The crane structures and their support equipment are designed to withstand all design loads while remaining in place.

F. The crane system design is based on an analysis that considers the confinement of radioactive material under conditions of system failure and misoperation.

G. Heavy lift cranes are adequately designed to maintain functionality when subjected to tornadoes, tornado missiles, earthquakes, floods, and any other appropriate severe natural phenomena as established in the ISA.

11.5 REVIEW PROCEDURES

11.5.1 Acceptance Review

The primary reviewer should perform an acceptance review to determine if the application adequately addresses the items in Section 11.3, "Areas of Review," for either the construction approval review or the review for a license to possess and use special nuclear material (SNM).

Guidance specific to the construction approval review and the review for a license to possess and use SNM is provided below:

A. Construction Approval

Specifically, the material submitted for the construction approval review should contain the applicant's commitments to provide plant systems that satisfy the acceptance criteria in Section 11.4 and should also address the layout and design of the plant systems, their components, and any related information considering the current stage of the applicant's design process.

B. License To Possess and Use SNM

Specifically, the application for a license to possess and use SNM should address the items described in Section 11.3 in full and update the information submitted for the construction approval to encompass design modifications and any other system features not adequately described during the construction approval review.

If the primary reviewer verifies that plant systems are adequately addressed, the primary reviewer should accept the application for the safety evaluation in Section 11.5.2. If the primary reviewer identifies significant deficiencies in the material provided, the primary reviewer should

request that the applicant submit additional information prior to the start of the safety evaluation.

The secondary and supporting reviewers should confirm that the described plant systems are consistent with descriptions in other sections of the application. Information provided for plant systems should be of comparable quality and detail and should not contradict or adversely impact information contained in other sections of the application.

11.5.2 Safety Evaluation

After determining that the application is acceptable for review in accordance with either Section 11.5.1(A) (construction approval review) or Section 11.5.1(B) (review for a license to possess and use SNM), the primary reviewer should perform a safety evaluation against the acceptance criteria described in Section 11.4. On the basis of its review, the staff may request that the applicant provide additional information or modify the application to meet those acceptance criteria.

Guidance specific to the construction approval review and the review for a license to possess and use SNM is provided below.

A. Construction Approval

The primary reviewer should verify the applicant's commitment to providing plant systems that meet or exceed the acceptance criteria in Section 11.4. The primary reviewer should focus on the layout and design of the plant systems, their components, and any related information considering the current stage of the applicant's design process.

B. License To Possess and Use SNM

The primary reviewer should establish that the applicant's plant systems' designs and operations provide reasonable assurance that the plant systems satisfy the acceptance criteria in Section 11.4 and will be available and reliable to perform their intended safety functions when needed. The primary reviewer also should ensure that adequate documentation is provided in the ISA Summary for all plant systems that are identified as IROFS.

Secondary and supporting reviewers should confirm that the provisions made in the application for plant systems are in accordance and consistent with their specified sections of the SRP. For example, the review performed by the primary reviewer of Chapter 15.0 of this SRP—as a supporting reviewer—should encompass the adequacy of management measures applied to plant systems. The reviewer of radiation safety under Chapter 9.0 should evaluate the design and operation of plant systems, such as the ventilation systems and certain instrumentation and controls, with regard to adequate radiation protection. The reviewer of human factors under Chapter 12.0 should confirm that the principles of human factors engineering are applied to the instrumentation and control systems' design. Also, the primary reviewer of Chapter 5.0 should determine the adequacy of IROFS (including

plant systems) to assure that the likelihood and consequences of identified accidents meet the performance requirements of 10 CFR 70.61.

For an existing facility being reviewed for a license amendment or renewal, the NRC reviewers may wish to visit the site and facility personnel to gain a better understanding of the represented plant systems and their intended safety functions. For a planned facility, the NRC reviewers may wish to meet with the design team to gain a better understanding of the process, its potential hazards, and safety approaches.

When the safety evaluation is complete, the primary reviewer—with assistance from the other reviewers—should prepare the plant systems input for the Safety Evaluation Report (SER) as described in Section 11.6 using the acceptance criteria from Section 11.4. The secondary reviewers should coordinate the plant systems input with the balance of the reviews and the SER.

11.6 EVALUATION FINDINGS

The primary reviewer should document the safety evaluation by preparing material suitable for inclusion in the SER. The primary reviewer should describe the review, explain the basis for the findings, and state the conclusions.

The staff could document the safety evaluation for the construction approval review by stating that the applicant has committed to providing plant systems that meet or exceed the acceptance criteria in Section 11.4.

The staff could document a safety evaluation for the license application for operations as follows:

> *The staff evaluated [insert a summary statement of what was evaluated and why the reviewer finds the submittal acceptable]. Based on the review of the license application, the NRC staff concluded that the applicant's plant systems' designs and operations satisfy the staff's acceptance criteria and are adequately available and reliable to perform their intended safety functions when needed. In doing so, the applicant has satisfactorily addressed the applicable regulatory requirements, including the performance requirements, the baseline design criteria, and the defense-in-depth practices contained in 10 CFR Part 70.*

11.7 REFERENCES

American Concrete Institute (ACI). 349–97, "Code Requirement for Nuclear Safety-Related Concrete Structures."

American Institute of Steel Construction (AISC). N690–84, "Specification for the Design, Fabrication, and Erection of Steel Safety-Related Structures for Nuclear Facilities."

American National Standards Institute/American Nuclear Society (ANSI/ANS). ANSI/ANS–2.8–1992, "Determining Design Basis Flooding at Power Reactor Sites."

———. ANSI/ANS–2.11–1978(R1989), "Guidelines for Evaluating Site-Related Geotechnical Parameters at Nuclear Power Plant Sites."

———. ANSI/ANS–2.19–1981(R1990), "Guidelines for Establishing Site-Related Parameters for Site Selection and Design of an Independent Spent Fuel Storage Installation (Water Pool Type)."

American National Standards Institute/American Society of Mechanical Engineers (ANSI/ASME). ANSI/ASME–B30.2–1983, "Overhead and Gantry Cranes (Top Running Bridge, Single or Multiple Girder, Top Running Hoist)."

———. ANSI/ASME–B30.16–1987, "Overhead Hoists."

———. ANSI/ASME–N509–1980, "Testing of Nuclear Air-Cleaning Systems."

———. ANSI/ASME–N510–1980, "Nuclear Power Plant Air Cleaning Units and Components."

American National Standards Institute/National Fire Protection Association (ANSI/(NFPA). ANSI/NFPA–780–1997, "Lightning Protection."

American Society of Civil Engineers (ASCE). ASCE–1–82, "Guidelines for Design and Analysis of Nuclear Safety-Related Earth Structures."

———. ASCE–4–86, "Seismic Analysis of Safety-Related Nuclear Structures."

———. ASCE–7–95, "Minimum Design Loads for Buildings and Other Structures."

Code of Federal Regulations, *Title 29, Labor, Chapter XVII,* "Occupational Safety and Health Administration, Department of Labor."

Crane Manufacturers Association of America (CMAA). Specification 70, "Specifications for Electric Overhead Traveling Cranes."

Department of Energy (U.S.) (DOE). Standard 1128-98, "Guide of Good Practices for Occupational Radiological Protection in Plutonium Facilities," Section C.4.3.1, "Piping and Valves."

Institute of Electrical and Electronics Engineers (IEEE) Nuclear Power Standards Collection. IEEE: Piscataway, New Jersey.

Nuclear Regulatory Commission (U.S.) (NRC). "Domestic Licensing of Special Nuclear Material (10 CFR Part 70)," *Federal Register:* Vol. 64, No. 146. pp. 41338-41357. July 30, 1999.

———. NUREG-0800, Standard Review Plan, Chapter 7, "Instrumentation and Controls." NRC: Washington, D.C.

———. NUREG-0800, Standard Review Plan, Chapter 8, "Electric Power," Table 8-1, Acceptance Criterial and Guidelines for Electric Power Systems. NRC: Washington, D.C.

———. NUREG-0800, Standard Review Plan, Chapter 9, "Auxiliary Systems." NRC: Washington, D.C.

———. Regulatory Guides for Division 1, Power Reactors.

———. Regulatory Guide 8.8, Revision 3, "Information Relevant to Ensuring that Occupational Exposures at Nuclear Power Stations will be as Low as is Reasonably Achievable." NRC: Washington D.C. June 1978.

12.0 HUMAN FACTORS ENGINEERING FOR PERSONNEL ACTIVITIES

12.1 PURPOSE OF REVIEW

The purpose of this review is to establish that human factors engineering (HFE) is applied to personnel activities identified as safety-significant, consistent with the findings of the integrated safety analysis (ISA), and the determination of whether an item relied on for safety has special or unique safety significance. A graded approach commensurate with the complexity and integration and operation of the control systems is appropriate. The application of HFE to personnel activities ensures that the potential for human error in the facility operations was addressed during the design of the facility by facilitating correct, and inhibiting wrong, decisions by personnel and by providing means for detecting and correcting or compensating for error.

For the purposes of this chapter, the phrase "personnel activities" represents personnel activities identified as items relied on for safety (IROFS) and personnel activities that support safety, such as maintenance.

12.2 RESPONSIBILITY FOR REVIEW

Primary: Human Factors Specialist

Secondary: ISA Reviewer
Primary Reviewer of SRP Section 15.4, "Training and Qualification of Plant Personnel"
Primary Reviewer of SRP Section 15.5, "Plant Procedures"
Instrumentation and Control (I&C) Reviewer

Supporting: Fuel Cycle Facility Inspector

12.3 AREAS OF REVIEW

The mixed oxide (MOX) facility relies heavily on automated systems employing advanced digital instrumentation and control technology. These systems may be complex, with potential negative impacts on human performance activities in both operations and maintenance. The scope of review for the HFE for personnel activities should be consistent with the results of the ISA and include, as appropriate:

A. A description of the safety-significant personnel actions, the associated human systems interfaces (HSIs), and the consequences of incorrectly performing or omitting actions for each personnel activity.

B. The applicant's plans for HFE design review, including the:

   i. Goals and scope;
   ii. Team composition, organizational authority, and responsibilities;

iii. Process and procedures;
iv. Issues tracking; and
v. Functional description.

C. Operating experience review;

D. Function and task analysis;

E. HSI design, inventory, and characterization;

F. Staffing;

G. Procedure development;

H. Training program development; and

I. Human factors verification and validation (V&V).

All nine areas of review (A–I) may not be necessary for a specific application. Areas of review should be based on the applicant's provisions to address personnel activities consistent with the ISA findings; the similarity of the associated HFE issues for similar type plants; and the determination of whether an item relied on for safety has special or unique safety significance.

12.4 ACCEPTANCE CRITERIA

12.4.1 Regulatory Requirements

Regulatory requirements for HFE for personnel activities are:

A. 10 CFR 70.61(e), which requires a safety program to ensure that each item relied on for safety will be available and reliable to perform its intended function when needed.

B. 10 CFR 70.64(b)(2), which requires features that enhance safety by reducing challenges to IROFS.

12.4.2 Regulatory Guidance

Staff and industry documents that may provide useful background information for consideration in applying HFE to MOX fuel fabrication facilities are listed in Section 12.7.

12.4.3 Regulatory Acceptance Criteria

The HFE for personnel actions should be acceptable if:

A. Identification of Personnel Activities

The applicant appropriately identified the personnel activities such that the reviewer can understand the actions, the HSIs involved, and the consequences.

B. HFE Design Review Planning

The applicant's approach for planning HFE design review includes:

i. Identification of appropriate goals and scope to ensure that HFE practices and guidelines are implemented during design, construction, and operation of the facility.

ii. Implementation by an HFE team that has the appropriate composition, experience, and organizational authority to ensure that HFE is considered in the design of HSI for personnel activities. The HFE team's responsibilities include ensuring the proper development, execution, oversight, and documentation of the HFE function. Depending on the identification of personnel activities, it may be appropriate for the HFE team to consist of a single individual.

iii. An HFE team that attains the HFE goals and scope through established processes and procedures and that tracks HFE issues.

iv. An HFE function that ensures that all aspects of the personnel activities including the HSI are developed, designed, and evaluated on the basis of a structured approach using HFE.

C. Operating Experience Review (OER)

The applicant identified safety-related HFE events or potential events that have occurred in existing facilities that are similar to the proposed facility. The applicant:

i. Reviewed the HFE-related events or potential events for relevance;

ii. Analyzed the HSI technology employed for the relevant HFE events or potential events; and

iii. Conducted (or reviewed existing) operator interviews and surveys on the HSI technology for the relevant HFE events or potential events.

D. Functional Allocation Analysis and Task Analysis

i. Functional allocation analysis: The functional allocation analysis is based on the OER. Personnel activities are functionally allocated to take advantage of human strengths and to avoid demands that are not compatible with human capabilities.

ii. Task analysis: The task analysis includes the task analysis scope, identification and analysis of critical tasks; detailed description of personnel demands (e.g., input,

processing, and output); iterative nature of the analysis; and incorporation of job design issues. The task analysis addresses each operating mode for each personnel activity (e.g., startup, normal operations, emergency operations, and shutdown). The task analysis results support the functional allocation.

E. HSI Design, Inventory, and Characterization

The HSI design incorporates the functional allocation analysis and task analysis into the detailed design of safety-significant HSI components (e.g., alarms, displays, controls, and operator aids) through the systematic application of HFE. The HSI design includes the overall work environment, the work space layout (e.g., control room and remote shutdown facility layouts), the control panel and console design, the control and display device layout, and information and control interface design details. The HSI design process ensures the application of HFE to the HSI required to perform personnel activities. The HSI design process excludes the development of extraneous controls and displays. The HSI design documentation includes a complete HSI inventory and the basis for the HSI characterization.

F. Staffing

Staffing is based on a review of the number and qualifications of personnel for each personnel activity during all plant operating conditions. The applicant conducts this review in a systematic manner that incorporates the functional allocation and task analysis results. Categories of personnel are based on the types of personnel activities. Staffing considerations include issues identified in the OER, functional allocation, HSI design, procedure development, and V&V.

G. Procedure Development

The applicant's procedure development for personnel activities incorporates HFE principles and criteria, along with all other design requirements, to develop procedures that are technically accurate, comprehensive, explicit, easy to utilize, and validated consistent with the acceptance criteria in Section 15.5.4 of this SRP. Because procedures are considered an essential component of the HSI design, they are derived from the same design process and analyses as the other components of the HSI (for example, displays, controls, operator aids) and subject to the same evaluation processes. Procedures include, as needed to support the personnel activity: generic technical guidance, plant and system operations, abnormal and emergency operations, tests (for example, preoperational, startup, and surveillance), and alarm response.

H. Training Program Development

The applicant's training program development addresses all personnel activities. The training program development indicates how the knowledge and skill requirements of personnel will be evaluated, how the training program development is coordinated with the other activities of the HFE design process, and how the training program will be

implemented in an effective manner consistent with human factors principles and practices. The training program development should address the areas of review and acceptance criteria described in Section 15.4.4 of this SRP and should result in a training program that provides personnel with the qualifications commensurate with the personnel activities.

I. Verification&Validation

V&V confirms that the design incorporates HFE to HSI in a manner that enables the successful completion of personnel activities. The V&V should be applied to personnel activities (see Item A) and HSI design (see Item E). The V&V process should consist of the following:

i. HSI task support verification: HSI components are appropriately provided for personnel activities through HSI task support verification. The verification shows that each HSI identified the task analysis (see Item D(ii)) and that the HSI design (see Item E) is appropriately provided, yet minimizes the incorporation of information, displays, controls, and decorative features that unnecessarily complicate personnel activities.

ii. HFE design verification: The HFE design verification shows that each HSI identified for a personnel activity incorporated HFE into the design. Deviations from accepted HFE principles and guidelines should be justified or documented for resolution/correction. If all HSI components are not addressed by HFE design verification, then an alternative multidimensional sampling methodology should be used to assure comprehensive consideration of the safety significance of HSI components. The sample size should be sufficient to identify a range of significant safety issues.

iii. Integrated system validation: The applicant commits to a performance-based evaluation of the integrated design to ensure that the HFE/HSI supports safe operation of the plant. Integrated system validation is performed after HFE problems identified in HFE design activities are resolved or corrected because these may negatively affect performance and, therefore, validation results. Validation is performed by evaluating personnel activities using appropriate measurement tools. All personnel activities should be tested and found to be adequately supported in the design, including personnel activities outside the control room.

iv. Human factors issue resolution verification: The applicant verifies that HFE issues identified during the design process were addressed and resolved. Issue resolution verification should be documented in the HFE issue tracking system established by the HFE team (see Item B). Issues that cannot be resolved until the HSI design is constructed, installed, and tested should be identified and incorporated into the final HFE/HSI design verification.

v. Final HFE/HSI design verification: The applicant should commit to performing a final HFE/HSI design verification if the applicant cannot demonstrate that it has fully evaluated the actual installation of the final HSI design in the plant through the V&V activities described above. Final HFE/HSI design verification should demonstrate that

in-plant HFE design implementation conforms to the HFE design (see Item E) as modified V&V activities.

V&V activities should be performed in the order listed above, as necessary. However, the applicant may find that it is necessary to iterate in order to address design corrections and modifications that occur during V&V.

12.5 REVIEW PROCEDURES

12.5.1 Acceptance Review

The primary reviewer should perform an acceptance review to determine if the application adequately addresses the items in Section 12.3, "Areas of Review," for either the construction approval review or the review for a license to possess and use special nuclear material (SNM). Guidance specific to the construction approval review and the review for a license to possess and use SNM is provided below.

A. Construction Approval

Specifically, the safety assessment of the design basis should address Section 12.3(A)–(E) consistent with the level of design and the consequences of incorrectly performing the personnel activity consistent with the safety assessment of the design basis. Where information is under development or not yet available, the applicant may use a commitment to providing the material with the license application in lieu of the actual material.

B. License To Possess and Use SNM

Specifically, the safety assessment of the license application should fully address Section 12.3(A)–(I) consistent with the consequences of incorrectly performing the personnel activity.

If the primary reviewer verifies that the HFE for personnel activities is adequately addressed in either the construction approval review or the review for the license to possess and use SNM, the primary reviewer should accept the application for the safety evaluation in Section 12.5.2. If the primary reviewer identifies significant deficiencies in the material provided, the primary reviewer should request that the applicant submit additional information prior to the start of the safety evaluation.

12.5.2 Safety Evaluation

After determining that the application is acceptable for review in accordance with either Section 12.5.1.A (construction approval review) or 12.5.1.B (review for a license to possess and use SNM), the primary reviewer should perform a safety evaluation against the acceptance criteria described in Section 12.4. On the basis of its review, the staff may request that the

applicant provide additional information or modify the application to meet those acceptance criteria.

The primary reviewer should use a tiered approach for evaluating HFE for personnel activities. The upper tier is the program description level, such as missions or goals. The middle tier is when functions are allocated to tasks (personnel activities) for the purposes of specifying the alarms, information, and controls. The tasks are arranged into meaningful jobs and the HSI should be designed to best support job task performance. The lower tier is the detailed design (of the HSI, procedures, and training) and how they are incorporated into the facility design. Evaluation of the HFE design should be broad-based and include aspects of normal and emergency operations, testing, maintenance, etc., consistent with findings in the safety assessment of the design basis (application for construction approval) or in the ISA Summary (license application for operations).

Guidance specific to the application for construction approval and the license application for operations is provided below.

A. Construction Approval

In general, the primary reviewer should perform an upper-tier review for the safety assessment of the design basis. As the level of design permits, the primary reviewer should perform a middle-tier review on those personnel activities that are identified as preventing or mitigating accident consequences.

B. License To Possess and Use SNM

In general, the primary reviewer should perform a lower-tier review for personnel activities that prevent or mitigate "high-consequence" events, a middle-tier review for personnel activities that prevent or mitigate "intermediate-consequence" events, and a high-level review for any remaining HFE activities.

The primary reviewer should review the ISA Summary to ensure that personnel activities have been suitably characterized as IROFS. The extent to which HFE elements are applied should be based on the number, type, complexity, and potential consequences of the personnel activities.

The secondary reviewer should ensure that the types of personnel activities relied on for safety are appropriate. The primary reviewer should coordinate with the I&C reviewer for Chapter 11.0, "Plant Systems," to confirm that HFE principles are appropriately addressed in the I&C approach.

The supporting reviewers should assist in the tiered approach of the review so they may look at more specific examples of human factors engineering application.

When the safety evaluation is complete, the primary reviewer, with assistance from the other reviewers, should prepare the HFE input for the Safety Evaluation Report (SER), as described

in Section 12.6 using the acceptance criteria from Section 12.4. The secondary reviewer should coordinate the chemical safety input with the balance of the reviews and the SER.

12.6 EVALUATION FINDINGS

The primary reviewer should document the safety evaluation by preparing material suitable for inclusion in the SER. The primary reviewer should describe the review, explain the basis for the findings, and state the conclusions.

The staff could document the safety evaluation for the construction approval review as follows:

> *The staff reviewed the application of human factors engineering (HFE) to personnel activities for the application for construction approval for [insert facility name] according to Chapter 12.0 of NUREG–1718. The staff evaluated [insert a summary statement of the evaluation] and found [insert a summary of the findings].*
>
> *The staff concluded that the applicant has established an adequate design basis, as it relates to HFE, that meets the requirements for construction approval in 10 CFR Part 70.*

The staff could document the safety evaluation for the review for a license to possess and use SNM as follows:

> *The staff reviewed the application of human factors engineering (HFE) to personnel activities for the license application to possess and use SNM at [insert facility name] according to Chapter 12.0 of NUREG–1718. The staff evaluated [insert a summary statement of the evaluation] and found [insert a summary of the findings].*
>
> *The staff concluded that the applicant applied HFE to personnel activities identified as items relied on for safety, consistent with the results of the ISA, and that its personnel activities meet the requirements associated with human factors given in 10 CFR Part 70.*

12.7 REFERENCES

Code of Federal Regulations, *Title 10, Energy*, Part 70, "Domestic Licensing of Special Nuclear Material."

Department of Defense (U.S.) (DOD). MIL–STD–1472D, "Human Engineering Design Criteria for Military Systems, Equipment and Facilities." DOD: Washington, D.C.

Nuclear Regulatory Commission, (U.S.) (NRC). NUREG–0700, Rev.1, Vol.1-3, "Human-System Interface Design Review Guideline." NRC: Washington, D.C. 1996.

———. NUREG–0711, "Human Factors Engineering Program Review Model." NRC: Washington, D.C. 1994.

———. NUREG/CR–6633, "Advanced Information Systems Design: Technical Basis and Human Factors Review Guidance." NRC: Washington, D.C. March 2000.

———. NUREG/CR–6634, "Computer-Based Procedure Systems: Technical Basis and Human Factors Review Guidance." NRC: Washington, D.C. March 2000.

———. NUREG/CR–6635, "Soft Controls: Technical Basis and Human Factors Review Guidance." NRC: Washington, D.C. March 2000.

———. NUREG/CR–6636, "Maintainability of Digital Systems: Technical Basis and Human Factors Review Guidance." NRC: Washington, D.C. March 2000.

———. NUREG/CR–6637, "Human Systems Interface and Plant Modification Process: Technical Basis and Human Factors Review Guidance." NRC: Washington, D.C. March 2000.

Nuclear Regulatory Commission (U.S.), Washington, D.C. "Domestic Licensing of Special Nuclear Material (10 CFR Part 70)." *Federal Register:* Vol. 64, No. 146. pp. 41338–41357. July 30, 1999.

13.0 SAFEGUARDS
13.1 PHYSICAL PROTECTION

13.1.1 PURPOSE OF REVIEW

The purpose of this review is to determine with reasonable assurance that the applicant has committed to having a physical protection system that provides high assurance that activities involving special nuclear material (SNM) are not inimical to the common defense and security and do not constitute an unreasonable risk to the public health and safety. The physical protection system should be designed to protect against the design basis threats of theft or diversion of formula quantities of strategic special nuclear material (SSNM) and radiological sabotage as stated in 10 CFR 73.1(a). Physical protection requirements for applicants possessing formula quantities of SSNM are found in 10 CFR 73.20, 73.45, and 73.46.

13.1.2 RESPONSIBILITY FOR REVIEW

Primary: Physical Protection Specialist

Secondary: None

Supporting: Regional Physical Protection Inspector

13.1.3 AREAS OF REVIEW

The reviewer should review the applicant's submittal for an acceptable physical protection system that protects against the design basis threats of both theft or diversion of formula quantities of SSNM and radiological sabotage. The reviewer should ensure that the applicant has described how the general performance requirements of 10 CFR 73.20, the performance capabilities outlined in 10 CFR 73.45, and the specific measures included in 10 CFR 73.46 will be met through development, implementation, and maintenance of a physical protection system.

13.1.4 ACCEPTANCE CRITERIA

13.1.4.1 Regulatory Requirements

Specific references are as follows:

A. In 10 CFR 73.20, the general performance objective and requirements for fixed-site physical protection systems are defined.

B. In 10 CFR 73.45, the performance capabilities for fixed-site physical protection systems are defined.

C. In 10 CFR 73.46, specific measures for fixed-site physical protection systems, subsystems, components, and procedures are detailed.

D. Appendices B, C, G, and H to 10 CFR 73.46 provide additional requirements applicable to the mixed oxide (MOX) facility.

13.1.4.2 Regulatory Guidance

The regulatory guidance for physical protection includes:

International Atomic Energy Agency (IAEA), Information Circular 225, Rev.4 (corrected), "The Physical Protection of Nuclear Material and Nuclear Facilities." IAEA: Vienna, Austria. June 1999.

Nuclear Regulatory Commission, (U.S.) (NRC). NUREG–BR0252, "User's Guide to Physical Protection Documents Published by the NRC." NRC: Washington, D.C. November 1998.

———. Regulatory Guide (RG) 5.52, Rev. 3, "Standard Format and Content of a Licensee Physical Protection Plan for Strategic Special Nuclear Material at Fixed Sites (Other than Nuclear Power Plants)." NRC: Washington, D.C. December 1994.

———. RG 5.44, "Perimeter Intrusion Alarm Systems." NRC: Washington, D.C. October 1997.

———. RG 5.55, "Standard Format and Content of Safeguards Contingency Plans for Fuel Cycle Facilities (for comment)." NRC: Washington, D.C. March 1978.

13.1.4.3 Regulatory Acceptance Criteria

The reviewer will find the applicant's physical protection system acceptable if the physical protection plan commitments are consistent with 10 CFR 73.20, 73.45, and 73.46. The physical protection plan for the MOX facility shall contain inspectable commitments that shall be the basis for the NRC physical protection inspection program. Therefore, it is imperative that commitments be expressed in unambiguous terms. NRC has determined that public disclosure of the details of the physical protection system for a MOX facility could affect common defense and security and should be classified as Confidential National Security Information.

13.1.4.3.1 Introduction and Schedule for Implementation

The applicant should state its corporate name, the facility name, and the location of the facility. The applicant should describe the MOX facility and the type of SNM that will be utilized, its general layout, its surrounding area, and the surrounding terrain. The reviewer should ensure that the applicant has included a map of the entire facility and other maps and illustrations, as appropriate. The applicant should indicate on these maps the owner-controlled area; the location of all buildings; the locations of physical protection systems, subsystems, and major components; the protected area and all entry/exit points; vehicle barriers; all material access

areas; vital areas (if applicable); controlled access areas; vaults; entry/exit control points; alarm stations; security posts; and response force staging areas.

The applicant should describe the schedule for implementing the physical protection plan. SSNM may not be stored or used at the MOX facility until the physical protection system is fully implemented and operational.

13.1.4.3.2 General Performance Objectives

The reviewer will determine that the applicant's commitments in this section are consistent with 10 CFR 73.46. In addition, the reviewer should verify the following:

A. The applicant has described in general terms how the physical protection system will have as its objective to provide high assurance that activities involving SNM are not inimical to the common defense and security and do not constitute an unreasonable risk to the public health and safety.

B. The applicant has described how, through the development, implementation, and maintenance of a physical protection system, the general performance objective and requirements outlined in 10 CFR 73.20 and the performance capability requirements of 10 CFR 73.45 will be met.

Further, the reviewer should ensure that the applicant has identified and described those portions of the physical protection system for which redundant and diverse components, as well as redundant and diverse subsystems and components, are necessary to ensure adequate performance as required by 10 CFR 73.20(b)(2). In general terms, the applicant should describe the subsystems and components to be used to provide this redundancy and diversity and the ways in which these subsystems and components are redundant and diverse.

Finally, the reviewer should verify that the applicant has described how the physical protection system is designed, tested, and maintained to ensure its continuous effectiveness, reliability, and availability. This verification should be conducted onsite by the reviewer prior to plan approval.

13.1.4.3.3. Design Basis Threat (10 CFR 73.1(a))

The applicant has affirmed the intent to protect against the design basis threats of both theft or diversion of formula quantities of SSNM and radiological sabotage, as described in 10 CFR 73.1(a). For a MOX fuel fabrication facility, it is important that the physical protection system be designed both to protect against radiological sabotage and to prevent theft of formula quantities of SSNM. With respect to radiological sabotage, the applicant is expected to establish a defensive strategy that would deny unauthorized access to areas of the plant that contain plutonium. The reviewer should ensure that the applicant has committed to maintain and update the physical protection plan to reflect any changes that are necessary to ensure the continuous ability to protect against the design basis threats.

13.1.4.3.4 Security Organization (10 CFR 73.46(b))

The performance objective of the security organization is to manage, control, and implement the physical protection system in a manner that is consistent with the physical protection plan and continuously maintains its effectiveness. The reviewer should ensure that the applicant has clearly described the security organization that will be used at the facility. The security organization should be acceptable if the applicant's commitments are consistent with the requirements in 10 CFR 73.46(b), and associated Appendices B, C, G, and H of 10 CFR Part 73, and the following criteria:

A. The applicant has stated whether the security organization is employed directly by the applicant or is a contractor to the applicant. If a contractor, the reviewer should ensure that the applicant described the written agreements between the applicant and contract guard force management that pertain to how the guard force will meet NRC's requirements in 10 CFR 73.46(b)(1) and in Appendix B, "General Criteria for Security Personnel," and Appendix H, "Weapons Qualification Criteria," to 10 CFR Part 73.

B. The applicant has described the structure and management of the security organization, including both uniformed security personnel and other persons responsible for security-related functions, consistent with 10 CFR 73.46(b)(1). This discussion should include a description of each supervisory and management position, including responsibilities and lines of authority to facility and corporate management.

C. The applicant has affirmed that at least one full-time member of the security organization will be onsite at all times with the authority to direct the physical protection activities of the security organization, consistent with 10 CFR 73.46(b)(2). The plan should also affirm that written security procedures will be used and that provisions for written approval of such procedures, and any revision thereto, are developed and used, consistent with 10 CFR 73.46(b)(3).

D. The applicant has affirmed that an approved Guard Force Training Plan will be in effect in accordance with Appendix B to 10 CFR Part 73. The physical protection plan should commit to having all members of the security organization trained, equipped, and qualified to perform each assigned security duty per 10 CFR Part 73 Appendix B and Appendix H as appropriate, consistent with 10 CFR 73.46(b)(4).

E. The applicant has described how the security personnel, licensee employees, or contractor employees will carry out their assigned duties or responsibilities upon the request of the NRC. The applicant should also affirm that, within any given period of time (e.g., at least one work shift or 8 hours), a member of the security organization will not be assigned to or have direct operational control over more than one of the redundant elements of a physical protection subsystem if such assignment or control could result in the loss of effectiveness of the subsystem, consistent with 10 CFR 73.46(b)(5).

F. The applicant has affirmed that every guard, armed response person, and Tactical Response Team (TRT) member will be armed and should describe the armament assigned to members of the security force by position title, consistent with 10 CFR 73.46(b)(6). The applicant should include a description of the qualification and requalification program for guard and TRT members in night firing with assigned weapons, and, for TRT members only, a description of the training program in response tactics, consistent with 10 CFR 73.46(b)(7) and (8). In addition, the applicant should describe the equipment to be used by members of the security force in providing effective response capabilities.

G. The applicant has described how scenarios for force-on-force exercises are developed, the design goals for conducting such exercises, and the frequency of exercises. The applicant should affirm that as a licensee it will permit NRC to observe one force-on-force exercise each year and that the NRC will receive a 60-day notice of the planned exercise, consistent with 10 CFR 73.46(b)(9).

H. The applicant has affirmed that the records required by 10 CFR 73.46(b)(3)(i), (4), (7), (8) and (9) will be maintained/retained and has described how they will be maintained/retained.

I. The applicant has described the physical fitness training program and medical examination for each guard, armed response person, or TRT member consistent with 10 CFR 3.46(b)(10)–(12) to ensure that these personnel are able to perform their assigned duties under conditions of strenuous tactical engagements.

13.1.4.3.5 Physical Barrier Subsystems (10 CFR 73.46(c))

A performance objective of physical barriers is to define areas within which authorized activities and conditions are permitted. Other performance objectives of barriers are to channel persons, vehicles, and material to or from entry/exit control points; to delay or deny unauthorized penetration attempts by persons, vehicles, or material; and to delay any unauthorized SSNM removal attempts sufficient to assist detection and assessment and permit a timely response by the security force to prevent the intended act. The reviewer should ensure that the applicant has clearly described the physical barrier subsystems that will be used at the facility. This section should be acceptable if the applicant's commitments are consistent with the requirements in 10 CFR 73.46(c) and the following criteria:

A. The applicant has described the facility's protected, controlled access, material access, and vital (if applicable) area barriers; discussed the purpose of each barrier; and described the spatial relationship between the protected area and material access or vital areas, consistent with 10 CFR 73.46(c)(2).

B. The applicant has affirmed that the perimeter of the protected area will be provided with two physical barriers, as defined in 10 CFR 73.2. The inner barrier must be positioned, constructed, and maintained to enhance assessment of penetration attempts and to delay attempts at unauthorized exit from the protected area, consistent with 10 CFR 73.46(c)(1). The applicant should commit to installing the protected area barrier fence so that it cannot be lifted to allow an individual to crawl under. The applicant should describe any access

points in the protected area barrier, their use, and how they are controlled and protected to ensure the integrity of the barrier.

C. The applicant has described the location and size of all isolation zones at the facility. Affirmation should be given that the isolation zones adjacent to the physical barriers at the perimeter of the protected area should be at least 6.1 m (20 ft) wide and be maintained clear of obstacles or structures on either side of the barriers to permit assessment, consistent with 10 CFR 73.46(c)(3).

D. The applicant has affirmed that the location and placement of vehicle barriers will provide protection against radiological sabotage by the design basis explosive (classified) or the use of a vehicle for transporting personnel and their equipment into the protected area to aid in the theft of SSNM. The applicant should include the physical description of the barrier system along with a commitment that the barrier can adequately counter the design basis vehicle (classified), consistent with 10 CFR 73.46(c)(1). If other than a commercially available barrier is used, the applicant should discuss any testing conducted to validate the penetration resistance of the barrier.

E. The applicant has described the lighting system provided to ensure illumination for all required monitoring, observation, and assessment activities for all exterior areas within the protected area. The commitment for illumination should be not less than 2.15 lumen per meter^2 (0.2 footcandle) measured horizontally at ground level, consistent with 10 CFR 73.46(c)(4). The applicant should discuss emergency backup power for protected area lighting and assessment capability if normal power is lost.

F. The applicant has described the purpose of each process material access area at the facility and the protection afforded SSNM (other than alloys, fuel elements, or fuel assemblies) while in these material access areas. Both physical and procedural protective measures should be described, consistent with 10 CFR 73.46(c)(5).

G. The applicant has affirmed that physical barrier subsystems will be in place to ensure that SSNM is stored or processed only in a material access area, vital equipment is located only within a vital area, and both vital and material access areas are located within a protected area. Physical barriers will be maintained for vital or material access areas that are separated from any physical barrier at the perimeter of the protected area. The applicant should describe the level of physical hardening for the walls, floors, and ceilings of these areas. The number, location, and types of entry/exit portals should be described. Methods used to provide hardening of the portals (during open and closed conditions) should be described. Hardening for ventilation and other openings greater than 619.4 cm^2 (96 square inches), with the smaller dimension of 15.2 cm (6 inches) or greater, should be described. Access to vital equipment or SSNM will require passage through at least three physical barriers.

H. The applicant has affirmed that SSNM other than alloys, fuel elements, or fuel assemblies shall be stored in a vault when not undergoing processing if the material can be used directly in the manufacture of a nuclear explosive device, consistent with

10 CFR 73.46(c)(5). The applicant should describe the purpose; the construction of the walls, ceiling, and floor; and the location and type of entry portal to each vault. The penetration delay time for the vault should be estimated by the applicant based on the vault construction method and materials and considering penetration by both tools and explosive techniques. The applicant should affirm that the penetration delay time will be greater than the time required for the TRT to respond.

I. The applicant has described the construction and use of tamper-indicating containers for the storage of SSNM (other than alloys, fuel elements, or fuel assemblies), consistent with 10 CFR 73.46(c)(5).

J. The applicant has described how fuel elements and fuel assemblies will be stored and protected.

13.1.4.3.6 Access Control Subsystems and Procedures (10 CFR 73.46(d))

The performance objective of access authorization controls and procedures is to provide current authorization lists and entry criteria. The performance objectives of entry controls and procedures are to verify the identity of persons, vehicles, and materials; assess such identities against current authorization lists and entry criteria before permitting entry; and initiate timely response measures to deny unauthorized entries. The reviewer should ensure that the applicant has clearly described the access control subsystems that will be used at the facility. This section should be acceptable if the applicant's commitments are consistent with the requirements in 10 CFR 73.46(d) and the following criteria:

A. The applicant has described the numbered picture badge identification system used at the facility, consistent with 10 CFR 73.46(d)(1). This description should include a discussion of procedures used for badging individuals authorized access to the protected area and for individuals whose are not employed by the applicant but require frequent and extended access to the protected area. Instructions that badged individuals receive in proper badge procedures should also be discussed, along with procedures for accommodating nonbadged emergency response individuals during emergency situations. Verification of authorization can be accomplished by use of systems such as biometrics, personal identification numbers, card readers, or combinations thereof. Badges should not be taken offsite unless the applicant commits to using a highly reliable method of verifying personal identity such as biometrics. The applicant should affirm that blank badge material will be controlled. The applicant should affirm that the badge of an employee terminated for cause should be immediately retrieved or deleted from the computerized access system.

B. The applicant has affirmed that badges will be required to be displayed by all individuals while inside the protected area, consistent with 10 CFR 73.46(d)(1).

C. The applicant has committed to procedures for determining an individual's need for access to a vital area, material access area, or controlled access area; procedures for distributing and maintaining lists of authorized individuals; procedures for ensuring the maintenance of the two-man rule within material access areas and vaults; procedures for ensuring that no

activities other than those that require access to SSNM or necessary maintenance are permitted within material access areas; and methods for visually identifying individuals authorized unescorted access to vital areas, material access areas, or controlled access areas, consistent with 10 CFR 73.46(d)(2). This discussion should note differences in procedures, if any, between working and nonworking hours (nights, weekends, and holidays) and normal versus emergency conditions. The applicant should commit that access to material access areas and vaults requires a minimum of two individuals to be present. The applicant should commit to allowing unescorted access to vital, material access, or controlled access areas only to individuals with a government security clearance and a need to know.

D. The applicant has described how it will control all points of personnel access into the protected area under both normal and emergency conditions, consistent with 10 CFR 73.46(d)(4). This description should include a discussion of methods used to identify individuals and to verify individuals' authorization; methods used to verify emergency conditions; and procedures for conducting searches of individuals for firearms, explosives, and incendiary devices. The search function for detecting both firearms and explosives must use detector equipment. The equipment used should represent the current state-of-the-art equipment that is commercially available. The capabilities of the search equipment should be described. The applicant should also describe what actions it takes, including the use of pat-down searches, if it suspects an individual of trying to introduce contraband into the protected area or if the search equipment is not operating satisfactorily. The applicant should describe how it will determine that the equipment is operating properly. The applicant should commit to having the individual responsible for the last access control point prior to the protected area to be protected by a bullet-resisting structure hardened to at least the Underwriters Laboratories Inc. (UL) 752/Class IV level and preferably to the 7.62 mm level of protection.

E. The applicant should identify individuals exempted from any of the aforementioned access controls. The distribution and maintenance of authorization lists should also be described.

F. The applicant has affirmed that it will establish and follow written procedures that will permit access-control personnel to identify materials in hand-carried packages that are not authorized entry to the protected area during both normal and emergency conditions, consistent with 10 CFR 73.46(d)(5). Further, the applicant should describe procedures for searching hand-carried packages at personnel and vehicle access points for firearms, explosives, and incendiary devices.

G. The applicant has affirmed that it will establish and follow written procedures that will permit access-control personnel to identify materials in delivered packages that are not authorized entry to the protected area during both normal and emergency conditions, consistent with 10 CFR 73.46(d)(6). Further, methods used to check for proper identification and authorization should be described, along with search procedures for firearms, explosives, and incendiary devices. Any activities exempted from the above procedures should be described. The development, distribution, and maintenance of authorized (or unauthorized) materials lists should be described.

H. The applicant has described procedures used for controlling all points of vehicle access (nonemergency and emergency) into the protected area and how written procedures are established and followed that will permit access-control personnel to identify vehicles that are authorized entry to the protected area, consistent with 10 CFR 73.46(d)(3). The distribution and maintenance of these procedures should be described. Search procedures of all vehicles requiring entry to the protected area for firearms, explosives, and incendiary devices should also be described. Any vehicles exempt from the aforementioned procedures should be described, consistent with 10 CFR 73.46(d)(7). Procedures used in escorting vehicles within the protected area, and areas where vehicles may have access, along with the purpose for the access, should be discussed.

I. The applicant has described the control and use of designated licensee vehicles within the protected area, consistent with 10 CFR 73.46(d)(8).

J. The applicant has described the methods it proposes to use to control all points of personnel access to material access areas, vital areas, and controlled access areas, including methods used to verify identification and authorization, consistent with 10 CFR 73.46(d)(9). The applicant shall affirm that at least two armed and appropriately trained guards shall be posted at each material access area control point whenever it is in use. Personnel exit searches from material access areas should also be discussed, and the applicant should affirm that at least two individuals who are not authorized access to that material access area will conduct separate, independent searches for concealed SSNM. The applicant should affirm that material access area exit searches for SNM and metal can detect within established standards, consistent with NRC classified criteria.

K. The applicant has described procedures for verifying material entry authorizations and procedures for verifying quantity and type of material, consistent with 10 CFR 73.46(d)(9). These descriptions should include the components to be used in the detection of unauthorized materials that are hand-carried by authorized individuals, or mailed or otherwise shipped as part of an authorized shipment. The applicant has described how normal conditions differ between regular working hours and nonworking hours (nights, weekends, and holidays).

L. The applicant has described methods used to control all points of vehicle access (nonemergency and emergency) to material access areas, vital areas, and controlled access areas, including the establishment and maintenance of written procedures that will permit access control personnel to identify those vehicles that are authorized entry to material access and vital areas, consistent with 10 CFR 73.46(d)(9). Vehicle exit searches should also be described, and the applicant should affirm that searches will be conducted by a team of at least two individuals.

M. The applicant has described procedures and areas used for searching contaminated wastes coming from a material access area, consistent with 10 CFR 73.46(d)(10).

N. The applicant has described containers, procedures, and areas used for shipping SSNM offsite, consistent with 10 CFR 73.46(d)(11) and (12). The applicant should affirm that the packaging and shipping process will be conducted by a team of at least two individuals.

O. The applicant has described by job function individuals who may be designated as escorts and procedures used for escorting individuals during both routine and emergency situations. Such procedures should describe individuals requiring escort, escort/visitor ratios, badging procedures, and escort training and recordkeeping, consistent with 10 CFR 73.46(d)(13). The applicant should commit to a maximum escort/visitor ratio of at least one escort to five visitors.

P. The applicant has described procedures for controlling all keys, locks, combinations, and related equipment used to control access to protected, material access, vital, and controlled access areas. The discussion should describe the circumstances under which such keys, locks, combinations, and related equipment are changed and procedures followed when the employment of an employee with access to such keys, locks, combinations, etc., is terminated, consistent with 10 CFR 73.46(d)(14). The applicant should commit to changing keys, locks, combinations, and related equipment at least when there is evidence of compromise to any of the items to which a terminated employee had access.

Q. The applicant has committed to controlling information regarding the presence of NRC safeguards inspectors, consistent with 10 CFR 73.46(d)(15).

R. The applicant should describe recordkeeping procedures for: (1) current written procedures that permit access-control personnel to identify vehicles that are authorized and those materials that are not authorized entry to protected, material access, and vital areas; (2) findings of drum-scanning and tamper-sealing of containers of contaminated wastes exiting from material access areas; and (3) the required log of escorted individuals, consistent with 10 CFR 73.46(d)(3), (10), and (13).

13.1.4.3.7 Detection, Surveillance and Alarm Subsystems and Procedures (10 CFR 73.46(e))

The performance objectives of detection, surveillance, and alarm subsystems and procedures are to detect, assess, and communicate any unauthorized access or penetrations or such attempts by persons, vehicles, or materials at the time of the act or attempt so that the response can be such as to prevent unauthorized access or penetration. The reviewer should ensure that the applicant has clearly described the detection, surveillance, and alarm subsystems that will be used at the facility. This section should be acceptable if the applicant's commitments are consistent with the requirements in 10 CFR 73.46(e) and the following criteria:

A. The applicant has described the intrusion detection system that will be installed in the isolation zone between the two barriers at the protected area perimeter, consistent with 10 CFR 73.46(e)(1). The applicant should commit to providing a volumetric intrusion detection system, which is capable of detecting an individual weighing a minimum of

35 kg (77 lb) whether the individual is running, walking, crawling, jumping, or rolling through the isolation zone of the protected area. The capabilities, installation, and testing of the intrusion detection equipment should be consistent with Revision 3 of Regulatory Guide 5.44.

B. The applicant has described the location of all emergency exits and described the protection afforded them, consistent with 10 CFR 73.46(e)(2). The applicant should commit to maintaining all emergency exits in the protected, material access, vital, and controlled access areas locked to prevent entry from outside and to equipping them with local audible and visible alarms.

C. The applicant has described the protection and surveillance afforded: (1) unoccupied material access and vital areas; (2) the location of SSNM within process material access areas; and (3) vaults and process areas that contain SSNM that has not been alloyed or encapsulated, including a description of procedures for access to these particular vaults and process areas, consistent with 10 CFR 73.46(e)(3). Equipment used to provide this protection, along with associated detection capabilities, should also be described. The applicant should commit to having all unoccupied material access areas where plutonium is located equipped with volumetric intrusion detection equipment and closed circuit television (CCTV) for remote assessment. The applicant should affirm that access to unoccupied vaults and process areas requires that an individual other than the alarm station operator be present or have knowledge of access.

D. The applicant has described how all security stations and individuals (by job position), consistent with 10 CFR 73.46(e)(4), will be provided with duress alarms. The type of duress alarms used, where they are monitored, and emergency backup power should be described.

E. The applicant has described the location, construction, and characteristics of the central and secondary alarm stations, consistent with 10 CFR 73.46(e)(5). The applicant should commit to having all required alarms annunciate in a continuously manned central alarm station located within the protected area and in at least one other continuously manned independent onsite station. Continuous manning of alarm stations and methods used for annunciation of required alarms should be described, along with protection afforded the stations (both procedural and physical), so that a single act cannot remove the capability of calling for assistance or responding to an alarm. Affirmation also should be provided that the alarm stations are bullet-resisting to at least the UL 752/Class IV level, and preferably to the 7.62 mm level of protection. If other than commercially available armoring material is used, any testing or engineering studies conducted to validate the penetration resistance of the barrier should be described. Affirmation should be given that access to the alarm stations is controlled on a strict need-to-know basis and the central alarm station not contain any operational activities that would interfere with the execution of alarm response functions. The applicant should describe the annunciation systems at the alarm stations and commit to indicating the status of all alarms and alarm zones in both alarm stations.

F. The applicant has described (1) how detection equipment and alarm annunciation shall remain operable from independent emergency power sources, (2) the duration of operation in the event of loss of normal power, and (3) the indications given upon loss of normal power and transfer to standby power, consistent with 10 CFR 73.46(e)(6). The applicant should also affirm that switchover to standby power will be automatic and not cause false alarms.

G. The applicant has described the physical protection afforded alarm systems, including transmission media, to ensure that the system is not being tampered with, compromised, or on standby power without the knowledge of the licensee, consistent with 10 CFR 73.46(e)(7). The applicant should affirm that all tamper alarms will annunciate in either the access or the secure mode.

H. The applicant has described methods used to monitor all exterior areas within the protected area for unauthorized persons, vehicles, materials, and activities, and the duration or periodicity of such monitoring, consistent with 10 CFR 73.46(e)(8). Criteria used in defining authorized and unauthorized activities and conditions within the protected area should be described, along with methods for developing, maintaining, and distributing lists of authorized activities and conditions. The applicant should commit to monitoring or conducting random patrols within the protected area at least several times each shift.

I. The applicant has described methods used to observe individuals within material access areas to ensure that SSNM is not moved to unauthorized locations or moved in an unauthorized manner, consistent with 10 CFR 73.46(e)(9). The duration or periodicity of such monitoring should be described, along with criteria used in defining authorized and unauthorized activities and conditions within the material access area. Methods for developing, maintaining, and distributing lists of authorized activities and conditions should be described. The applicant should commit to using CCTV to observe these areas periodically during working hours and for remote access during nonworking hours.

13.1.4.3.8 Communication Subsystems (10 CFR 73.46(f))

The performance objective of communication subsystems is to provide for notification of an attempted unauthorized or unconfirmed removal of SSNM or attempted act of radiological sabotage so that response can be such as to prevent the unauthorized act. The reviewer should ensure that the applicant has clearly described the communication subsystems that will be used at the facility. The communication subsystems should be acceptable if the applicant's commitments are consistent with the requirements in 10 CFR 73.46(f) and the following criteria:

A. The applicant has described how each guard, watchman, armed response person, or TRT member on duty will be capable of maintaining continuous communications with the individuals in each continuously manned alarm station, consistent with 10 CFR 73.46(f)(1). The applicant should also describe how the individuals in each continuously manned alarm station will be capable of calling for assistance from other guards, watchmen, armed response personnel, or TRT members and from local law enforcement authorities.

B. The applicant has described the redundant and diverse systems used to ensure the capability of communications with the local law enforcement authorities, consistent with 10 CFR 73.46(f)(2). Cellular phone service may be an acceptable alternative method of communications if the service is reliable and provides complete coverage of the area of concern.

C. The applicant has described methods used to keep the nonportable communications equipment it uses operable in the event of loss of normal power, consistent with 10 CFR 73.46(f)(3). The applicant should discuss the length of time the equipment will operate on the emergency power source. All sources of emergency power should be protected and located within the protected area.

13.1.4.3.9 Test and Maintenance Programs (10 CFR 73.46(g))

The performance objective of test and maintenance programs is to provide confidence that security equipment will be available and reliable to perform its function when needed. The review should ensure that the applicant has clearly described the test and maintenance programs that will be used at the facility. The test and maintenance programs should be acceptable if the applicant's commitments are consistent with the requirements in 10 CFR 73.46(g) and the following criteria:

A. The applicant has described the test and maintenance programs for (1) intrusion alarms; (2) emergency exit alarms; (3) communications equipment; (4) physical barriers; and (5) other physical protection-related devices and equipment such as CCTV, locks, emergency power sources, alarm annunciators, duress alarms, search equipment, etc. used pursuant to 10 CFR 73.46 during the installation and construction, preoperational and operational tests of the physical protection subsystems and components, consistent with 10 CFR 73.46(g)(1)–(3). This discussion should also include the purpose for and intended level of testing and maintenance programs. In addition, specific methods for testing each type of equipment should be discussed, along with periodicity of testing, consistent with 10 CFR 73.46(g)(3). The applicant should commit to having a testing program for the perimeter intrusion detection system consistent with Revision 3 of Regulatory Guide 5.44. The applicant should describe the sensitivity of the SNM, metal, explosive, and x-ray search equipment and the device used for calibration. The applicant should commit to using a device comparable to one which meets the American Society for Testing and Materials (ASTM) ASTM–F792 standard, "Standard Practice for Design and Use of Ionizing Radiation Equipment for the Detection of Items Prohibited in Controlled Access Areas," consistent with NRC classified criteria.

B. The applicant has described the preventive maintenance program established to ensure the maintenance of all physical protection-related subsystems and components in operable and reliable condition, consistent with 10 CFR 73.46(g)(4) and (5). The applicant should describe corrective actions or compensatory measures used in the event of component failure within physical protection systems.

C. The applicant has described procedures used in performing repairs and maintenance of physical protection systems, consistent with 10 CFR 73.46(g)(5). The applicant should commit that all repairs and maintenance will be performed by two individuals working as a team and that performance verification tests will be conducted after maintenance has been completed.

D. The applicant has described how it will review and audit its security program, consistent with 10 CFR 73.46(g)(6). This discussion should include the periodicity of the review and audit, a description of who will conduct the review and audit, items to be covered by the review and audit, how the review and audit will be documented, to whom the review and audit findings will be provided for review, and the recordkeeping associated with the review and audit program.

E. The commitment for the frequency of the annual audit should not vary by more than plus or minus 1 month.

13.1.4.3.10 Contingency and Response Plans and Procedures (10 CFR 73.46(h))

The performance objective of contingency and response plans and procedures is to provide for predetermined response to safeguards contingency events so that the adversary will be engaged and impeded until offsite assistance arrives. The reviewer should ensure that the applicant has clearly thought out potential contingencies and has clearly described contingency and response plans that will be used by the facility. The contingency and response plans should be acceptable if the applicant's plans are consistent with the requirements in 10 CFR 73.46(h) and developed in accordance with the criteria in Appendix C to Part 73 and the following criteria:

A. The applicant has established a safeguards contingency plan for dealing with threats, thefts, and radiological sabotage related to SSNM and its facility and commits to maintain and follow the plan, consistent with 10 CFR 73.46(h)(1).

B. The applicant has described the documented response arrangements it has made with local law enforcement agencies, consistent with 10 CFR 73.46(h)(2). This description should include estimated number of response individuals with specific response times of arrival that are consistent with NRC classified criteria.

C. The applicant has described the number of TRT members immediately available for response and the duties they will be assigned. TRT members may be physically located at the facility or at a nearby facility such that their response is timely, effective, and not easily interdicted to ensure protection against the design basis threats defined in 10 CFR 73.1(a). In addition, the required force of guards or armed responders available onsite to assist the TRT should be described, along with a discussion of the rationale for determining the number of individuals in this force of guards or armed responders and the availability of this force, consistent with 10 CFR 73.46(h)(3).

D. The applicant has described its planned response procedures for dealing with the detection of abnormal presence or activity of persons or vehicles within an isolation zone, the protected area, a material access area, or a vital area; or evidence or indication of intrusion into the protected area, material access area, or a vital area should be described. The applicant has also described the methods for assessing the threat and responding to the threat, consistent with 10 CFR 73.46(h)(4). The applicant should establish a defensive strategy that would deny unauthorized access to areas of the facility that contain plutonium. The applicant should commit to requiring guards to interpose themselves between vital and material access areas and any adversary attempting entry for purposes of radiological sabotage or theft of SSNM, to intercept any persons exiting with SSNM, and to inform local law enforcement of the threat and request assistance.

E. The applicant has described the instructions that guards and armed responders will receive in the use of force, including the use of deadly force, in preventing or impeding theft of SSNM, consistent with 10 CFR 73.46(h)(5).

F. The applicant has described the methods that will be used for providing assessment of all protected area alarms. The applicant should commit to using CCTV or other suitable means that limit exposure of responding personnel to possible attack and permit assessment of the protected area barrier and associated isolation zones, consistent with 10 CFR 73.46(h)(6). The applicant should commit to the CCTV providing unobstructed view of the protected area barrier and isolation zones with no blind spots.

G. The applicant has described methods that will be used for assessing alarms occurring within unoccupied vaults and unoccupied material access areas containing plutonium, and the timeliness of assessment. The applicant should commit to using at least two security personnel to assess alarms by CCTV or other remote means that occur within unoccupied vaults and unoccupied material access areas, consistent with 10 CFR 73.46(h)(7).

H. The applicant has described methods that will be used for assessing alarms occurring within unoccupied vaults and unoccupied material access areas containing alloyed or encapsulated SSNM, and the timeliness of assessment. The applicant should commit to using at least two security personnel to remotely assess alarms by CCTV, or by at least two security personnel who are searched before exiting the material access areas, consistent with 10 CFR 73.46(h)(8).

I. The applicant has described how it will establish, maintain, and retain as a record the current safeguards contingency plan, consistent with 10 CFR 73.46(h)(1) and (2).

13.1.4.3.11 Reporting of Safeguards Events (10 CFR 73.71)

Acceptance should be based on the fact that the applicant adequately addresses how and when it will report safeguards events to the NRC and follows the criteria in 10 CFR Part 73, Appendix G, "Reportable Safeguards Events."

13.1.5 REVIEW PROCEDURES

13.1.5.1 Acceptance Review

The primary reviewer should perform an acceptance review to determine if the application adequately addresses the items in Section 13.1.3, "Areas of Review," for either the construction approval review or the review for a license to possess and use SNM.

Guidance specific to the construction approval review and the review for a license to possess and use SNM is provided below.

A. Construction Approval

Although the applicant is not expected to submit a physical protection plan for construction approval, the applicant should commit to developing and implementing a physical protection system that meets or exceeds the acceptance criteria in Section 13.1.4. If provided by the applicant, the primary reviewer should evaluate the proposed location and construction technique and materials of the buildings; protected, vital, material access, and controlled access area barriers; vehicle barriers; alarm stations; security search or control points; and vaults to ensure that the commitments and program goals, as described in Section 13.1.3, are appropriate for physical protection at the design stage.

B. License To Possess and Use SNM

Specifically, the license application should address Section 13.1.3 in full. The applicant is expected to provide a physical protection plan with the application for a license to possess and use SNM.

If the primary reviewer verifies that physical protection is adequately addressed (construction approval or license to possess and use SNM), the primary reviewer should accept the application for the safety evaluation in Section 13.1.5.2. If the primary reviewer identifies significant deficiencies in the material provided, the primary reviewer should request that the applicant submit additional information prior to the start of the safety evaluation.

13.1.5.2 Safety Evaluation

After determining that the application is acceptable for review in accordance with either Section 13.1.5.1(A) (construction approval) or 13.1.5.1(B) (license to possess and use SNM), the primary reviewer should perform an evaluation against the acceptance criteria described in Section 13.1.4. On the basis of that review, the reviewer may request that the applicant provide additional information or modify the application to meet those acceptance criteria.

Guidance specific to the construction approval review and the review for a license to possess and use SNM is provided below.

A. Construction Approval

The primary reviewer should establish that the applicant's proposed design, location, construction technique, and material for elements of the physical protection system and related commitments will lead to a physical protection plan that will meet or exceed the regulatory acceptance criteria in Section 13.1.4.

B. License to Possess and Use SNM

The primary reviewer should verify that sufficient information has been provided under Section 13.1.4.3 with respect to the physical protection plan and that the information provided is consistent with the guidance in this section.

When the evaluation is complete, the primary reviewer should prepare the physical protection input for the Safety Evaluation Report (SER), as described in Section 13.1.6 using the acceptance criteria from Section 13.1.4.

13.1.6 EVALUATION FINDINGS

The primary reviewer should document the physical protection evaluation by preparing material suitable for inclusion in the SER. The primary reviewer should describe the review, identify any alternative measures that will be used, explain the basis for the findings, and state the conclusions.

The reviewer could document the safety evaluation for the construction approval review as follows:

The reviewer reviewed the license application for construction approval for [insert name of facility] according to Section 13.1 of NUREG–1718. The reviewer evaluated [Insert a summary statement of what was evaluated] and found that [summarize the findings].

The reviewer concluded that the applicant provided adequate commitments and goals for the design of a physical protection system and that these commitments and goals should result in a physical protection plan that will meet or exceed the requirements in 10 CFR 73.20, 73.45 and 73.46 and guidance outlined in NUREG–1718. As a result, the applicant meets the requirements under 10 CFR Part 70 for construction approval of the facility in the area of physical protection.

The reviewer could document the safety evaluation for the review for the license to possess and use SNM as follows:

The reviewer reviewed the license application for [insert facility name] according to Section 13.1 of NUREG–1718. The reviewer evaluated [Insert a summary statement of what was evaluated] and found [insert a description of the findings]. Based on the review of the license application, the reviewer concluded that the applicant adequately described and

documented the physical protection system and provided a plan to address the regulations in 10 CFR 73.20, 10 CFR 73.45, and 10 CFR 73.46. Meeting the requirements given above provides an acceptable basis for the finding that, insofar as physical protection is concerned, the applicant meets the associated requirements in 10 CFR 73.20, 73.45, and 73.46 and therefore the physical protection plan is acceptable to support licensed operation under 10 CFR Part 70.

13.1.7 REFERENCES

Code of Federal Regulations, *Title 10, Energy,* Part 11, "Criteria and Procedures for Determining Eligibility for Access to Or Control Over Special Nuclear Material."

———. *Title 10, Energy,* Part 25, "Access Authorization for Licensee Personnel."

———. *Title 10, Energy,* Section 73.20, "General Performance Objectives and Requirements."

———. *Title 10, Energy,* Section 73.45, "Performance Capabilities for Fixed Site Physical Protection Systems."

———. *Title 10, Energy,* Section 73.46, "Fixed Site Physical Protection Systems, Subsystems, Components, and Procedures."

———. *Title 10, Energy,* Section 73.71, "Reporting of Safeguards Events."

———. *Title 10, Energy,* Part 95, "Security Facility Approval and Safeguarding of National Security Information and Restricted Data."

Nuclear Regulatory Commission (U.S.) (NRC). NUREG/CR-5081, "Tactical Exercise Planning Handbook." NRC: Washington, D.C. April 1989.

———. NUREG/CR-5172, "Tactical Training Reference Manual." NRC: Washington, D.C. April 1989.

———. RG 5.7, Rev. 1, "Entry/Exit Control for Protected Areas, Vital Areas, and Material Access Areas." NRC: Washington, D.C. May 1980.

———. RG 5.44, Rev. 3, "Perimeter Intrusion Alarm Systems." NRC: Washington, D.C. October 1997.

———. RG 5.52, Rev. 3, "Standard Format and Content of a Licensee Physical Protection Plan for Strategic Special Nuclear Material at Fixed Sites (Other than Nuclear Power Plants)." NRC: Washington, D.C. December 1994.

———. RG 5.55, "Standard Format and Content of Safeguards Contingency Plans for Fuel Cycle Facilities." NRC: Washington, D.C. March 1978.

13.0 SAFEGUARDS

13.2 MATERIAL CONTROL AND ACCOUNTING (MC&A)

13.2.1 PURPOSE OF REVIEW

The purpose of this review is to ensure that the Fundamental Nuclear Material Control Plan (FNMCP) submitted by the applicant describes how an material control and accounting (MC&A) system will be established, implemented, and maintained, and to ensure that the FNMCP is adequate to protect against, detect, and respond to the loss or theft of strategic special nuclear material (SSNM) by achieving the following five performance objectives stated in 10 CFR 74.51(a):

A. Prompt investigation of anomalies potentially indicative of SSNM losses;

B. Timely detection of the possible abrupt loss of 5 or more formula kilograms (FKG) of SSNM from an individual unit process;

C. Rapid determination of whether an actual loss of 5 or more FKG occurred;

D. Ongoing confirmation of the presence of SSNM in assigned locations; and

E. Timely generation of information to aid in the recovery of SSNM in the event of an actual loss.

These objectives will be achieved by meeting the system capabilities requirements stated in 10 CFR 74.51(b).

13.2.2 RESPONSIBILITY FOR REVIEW

Primary: Safeguards Technical Analyst (MC&A Specialist)

Secondary: Project Manager

Supporting: MC&A Physical Scientist (MC&A Inspector)
Physical Protection Reviewer

13.2.3 AREAS OF REVIEW

The staff should review the applicant's FNMCP to ensure that the plan, in meeting the five performance objectives stated in Section 13.2.1, addresses:

A. Process Monitoring Program: For each unit process, the applicant's establishment of a production quality control program capable of monitoring the status of material in process;

B. Item Monitoring Program: The applicant's establishment of a process to verify the presence and integrity of SSNM items on a statistical sampling basis;

C. Alarm Resolution Program: The applicant's establishment of an alarm resolution program that is capable of:

   i. Resolving the nature and causes of any MC&A alarm within approved time periods;

   ii. Notifying NRC of any MC&A alarms that remain unresolved beyond the time periods;

   iii. Determining the amount of actual SSNM lost and taking corrective actions;

   iv. Providing an ability to rapidly assess the validity of alleged thefts; and

   v. Taking appropriate actions when the abrupt loss detection estimate exceeds 2 Kg of plutonium.

D. Quality Assurance and Accounting Programs: The applicant's establishment of a quality assurance and accounting capability to address the following 11 elements: management structure, personnel qualification and training, measurement, measurement control, physical inventory, accounting, shipping and receiving, scrap control, human error, independent assessment, and SSNM custodianship.

13.2.4 ACCEPTANCE CRITERIA

13.2.4.1 Regulatory Requirements

Regulatory requirements applicable to the MC&A program and the FNMCP are specified in 10 CFR Part 74, "Material Control and Accounting of Special Nuclear Material." Subpart E, "Formula Quantities of Strategic Special Nuclear Material," particularly applies to MOX fuel fabrication facilities.

13.2.4.2 Regulatory Guidance

Nuclear Regulatory Commission (U.S.) (NRC). NUREG–1280, Rev. 1, "Standard Format and Content Acceptance Criteria for the Material Control and Accounting (MC&A) Reform Amendment." NRC: Washington, D.C. April 1995.

13.2.4.3 Regulatory Acceptance Criteria

The performance objectives and acceptance criteria discussed below pertain to plutonium, both before and after processing into MOX. MOX contains uranium in the form of either depleted, natural, or low-enriched uranium (LEU). The reviewer must be aware of which type of uranium will be processed into MOX and verify that this is stated in the process description section of the FNMCP. If the applicant uses LEU to produce MOX, the reviewer must verify that, up until the

time of processing, the LEU feed material is adequately controlled to enable the MC&A system to meet the objectives and requirements of 10 CFR Part 74.31.

It is important that the applicant establish the basis for determining the formula quantity of SSNM for a facility processing MOX. FKG means SSNM in any combination in a quantity of 1,000 grams computed by the formula:

grams = (grams contained U–235) + 2.5 (grams U–233 + grams plutonium).

Formula quantity means SSNM in any combination in a quantity of 5,000 grams or more computed by the above formula. Where the uranium oxide used in the process has an enrichment level lower than 20 percent, the determination of FKG is based on the amount of plutonium only. Therefore, 2 Kg of plutonium yields 5 FKG or a formula quantity of SSNM.

13.2.4.3.1 Performance Objectives

Reviewers should use a risk-informed, performance-based approach to review the applicant's program and capability in meeting the performance objectives in 10 CFR 74.51(a). The reviewers should give high priority to the overall timely detection and resolution program. The reviewers should evaluate whether the applicant appropriately considered and incorporated a collusion protection program in the MC&A system (i.e., threats from an insider and potential diversion strategies during fuel processing, in material storage, or from recovery/recycling products). The primary reviewer of this section should coordinate with the primary reviewer of Section 13.1 where the applicant designed the detection program to be complimentary to the physical protection requirements in 10 CFR Part 73 to minimize redundant systems while maintaining adequate safeguards assurance.

13.2.4.3.2 Process Monitoring

Section 74.53 requires that licensees monitor internal transfers, storage, and processing of SSNM. The applicant's process monitoring program should be capable of (1) promptly detecting a significant abrupt loss, diversion, or theft of 2 Kg of plutonium with 95 percent power of detection; and (2) monitoring the status of material in process. The "prompt" detection is dependent upon the classification of the materials (i.e., Category IA or IB), as specified in 10 CFR 74.53.

The applicant's process monitoring program should at least consist of:

A. Clearly defined process subdivisions and measurement points to satisfy unit detection criteria and the category of material being processed;

B. Adequate material control tests for each unit process for detecting abrupt losses with at least 95 percent power of detection, evaluation and update of the action threshold on semiannual basis, and ability to detect losses involving material substitution;

C. Basis for material classification (i.e., Category IA and IB materials);

D. Clear classification of inaccessible locations;

E. Identification of all credible substitute materials and the methods of preventing substitution;

F. A listing of material types exempted from the abrupt loss detection tests with their locations and bases for exemption;

G. Adequate trend analysis techniques and decision criteria, especially for the indication of trickling diversions; and

H. Adequate material balance tests and evaluation for research and development operations.

It is necessary for the applicant to submit a study of potential diversion scenarios as supporting information. Such a study should include, but not be limited to, abrupt losses, trickle diversion, insider and/or outsider diversion, unauthorized production, and material substitution.

The applicant's process monitoring program should be found acceptable if it meets the criteria specified in Chapter 1 of Revision 1 to NUREG–1280. In addition, NUREG/CR–4604, "Statistical Methods for Nuclear Material Management," provides guidance on statistical tests in providing 95 percent power of detection.

13.2.4.3.3 Item Monitoring

Section 74.55 requires that licensees establish an item monitoring program capable of providing timely plant-wide detection of the loss of items that total 2 Kg of plutonium with 99 percent power of detection. The "timely" detection is dependent upon the classification of the material (i.e., Category IA or IB), and the degree of tamper-safing that is employed, as specified in 10 CFR 74.55. The applicant's item monitoring program should at least consist of:

A. A clear item identification system;
B. A basis for item classification (i.e., Category IA and IB materials);
C. A tamper-safing procedure and system;
D. Accessibility control;
E. Accounting and control procedures;
F. Item measurement systems;
G. Item verification procedures; and
H. Item sampling techniques.

The applicant's item monitoring program should be found acceptable if it meets the criteria specified in Chapter 2 of Revision 1 to NUREG–1280. In addition, NUREG/CR–4604, "Statistical Methods for Nuclear Material Management," provides guidance on statistical tests in providing 99 percent power of detection.

13.2.4.3.4 Alarm Resolution

Section 74.57 requires that the licensees' alarm resolution and reporting programs assure:

A. Resolution of the nature and cause of any MC&A alarm within approved time periods;

B. Reports to the NRC within 24 hours of any unresolved MC&A alarm beyond the specified time period;

C. Determination of the amount of SSNM lost and corrective actions when a material loss has occurred;

D. The ability to rapidly assess the validity of alleged thefts; and

E. The taking of appropriate actions when an abrupt loss detection estimate exceeds 2 Kg of plutonium.

Specifically, the programs should address alarm resolution procedures, decision rules and their basis, and response time.

The applicant's programs for resolving and reporting indications of missing SSNM should be found acceptable if they meet the criteria specified in Chapter 3 of Revision 1 to NUREG–1280. In addition, the applicant should establish the capability to respond rapidly to alarms occurring externally to the MC&A system, as stipulated in Chapter 3.3 of Revision 1 to NUREG–1280.

13.2.4.3.5 Quality Assurance and Accounting Programs

Section 74.59 requires that licensees establish a quality assurance and accounting capability to address the 11 areas discussed in Sections 13.2.4.3.5 (A) through (K).

A. Management Structure

   Section 74.59(b) establishes requirements for the licensees' MC&A management structure, organization, responsibilities, procedures, etc. The applicant's MC&A program's management structure should demonstrate the checks and balances of the program to ensure effective functioning of the MC&A program by providing:

   i. Clear overall responsibility for MC&A responsibilities;

   ii. Independence of MC&A functions from production responsibilities;

   iii. Separation of key MC&A responsibilities from each other to provide controls and checks; and

   iv. Adequate review, approval, and use of approved written MC&A procedures.

The applicant's organization for developing and implementing the MC&A program and procedures should be found acceptable if it meets the criteria specified in Chapter 4.1 of Revision 1 to NUREG–1280. (SRP Chapter 2.0 provides additional guidance on organization and administration, and SRP Chapter 11.5 provides additional guidance on procedures.)

B. Personnel Qualification and Training

Section 74.59(c) establishes qualifications and training requirements for key MC&A personnel. The applicant's personnel qualification and training programs should ensure that qualified and adequately trained personnel are implementing and maintaining an effective MC&A program by ensuring that:

i. Personnel who work in key positions where mistakes could degrade the effectiveness of the MC&A program are trained to maintain a high level of safeguards awareness and are qualified to perform their duties and/or responsibilities;

ii. Continuing qualification of key personnel will be verified on an ongoing basis or at least every 2 years; and

iii. The training program emphasizes the job purposes and scope and provides a balance between theory and practice.

The applicant's personnel qualification and training programs should be found acceptable if they meet the criteria specified in Chapter 4.2 of Revision 1 to NUREG–1280. (SRP Chapter 11.4 provides additional guidance on training and qualification.)

C. Measurements

Section 74.59(d) requires that licensees establish and maintain a system of measurements. The applicant's measurement program should ensure that:

i. All source material, SNM, and SSNM information in accounting records is based on measured values;

ii. Key measurement systems and measurement points are identified;

iii. At each measurement point, the appropriate measurement method and system are used for the accurate and precise determination of the material type;

iv. The MC&A system enables the estimation of the standard deviation associated with each measured quantity; and

v. Necessary data are provided for performing material control tests.

The applicant's measurement program should be found acceptable if it meets the criteria specified in Chapter 4.3 of Revision 1 to NUREG–1280. The following documents also provide additional guidance/information on measurement methods: NUREG–0228, "Calorimetric Assay of Plutonium;" NUREG–0256, "Methods for the Accountability of Mixed Oxide;" NUREG/CR–0602, "Active Nondestructive Assay of Nuclear Materials;" NUREG/CR–2078, "Handbook of Nuclear Safeguards Measurement Methods," September 1983; and NUREG/CR–5550, "Passive Nondestructive Assay of Nuclear Materials."

D. Measurement Control

Section 74.59(e) requires that licensees ensure the quality of measurement systems and material processing practices. The applicant's measurement control program should include:

i. Performing engineering analyses and evaluations on all MC&A measurement systems;

ii. Establishing and verifying procedures for mixing and sampling source material, SNM, and SSNM and maintaining sample integrity during transport and storage;

iii. Generating current data on the performance of measurement processes;

iv. Using the measurement control data for the estimation of standard errors of inventory difference (SEID) and the standard deviation associated with the process differences;

v. Ensuring SEID is less than 0.1 percent of the active inventory;

vi. Applying bias corrections in accordance with approved written procedures;

vii. Investigating and taking corrective actions when the associated measurement biases exceed limits; and

viii. Establishing and maintaining a statistical control system to monitor the quality of each type of program measurement.

The measurement control program applies to measurement systems used for inventory, shipper-receiver measurement, monitoring cumulative shipper-receiver differences, and detection and response purposes. In addition, the applicant should ensure the traceability of calibration and control standard measurements to a national standard or nationally accepted measurement system.

The applicant's measurement control program should be found acceptable if it meets the criteria specified in Chapter 4.4 of Revision 1 to NUREG–1280. NUREG/CR–4604 and TID 26298, "Statistical Methods in Nuclear Material Control," 1973, provide additional guidance on measurement error standard deviation.

E. Physical Inventory

Section 74.59(f) contains the basic requirements for scheduling, performing, and evaluating physical inventories. The applicant's physical inventory program should ensure that it provides for:

i. Performing a physical inventory at least every 6 calendar months (unless otherwise required to satisfy 10 CFR Part 75);

ii. Within 45 days after the start of the ending inventory:

   a. Calculating inventory difference (ID) and estimating SEID;
   b. Investigating, resolving, and reporting excessive ID and SEID;
   c. Reconciling and adjusting the book inventory; and
   d. Performing reinventory as necessary.

iii. Implementing policies, practices, and procedures designed to ensure the quality of physical inventories; and

iv. Controlling and maintaining records and documentation associated with the physical inventories.

The applicant should appropriately describe the procedures and/or processes for verifying the location and identity of all quantities of SSNM and for verifying that all quantities are based on measurements, inventory cutoff and cutoff verification, and reconciliation. It is critical that the applicant demonstrate its ability to eliminate holdup before physical inventory and to measure holdup if it cannot be eliminated.

The applicant's physical inventory program should be found acceptable if it meets the criteria specified in Chapter 4.5 of Revision 1 to NUREG–1280. NUREG/BR–0096, "Instructions and Guidance for Completing Physical Inventory Summary Reports," provides additional guidance on completing NRC Form 327, "SNM and SM Physical Inventory Summary Report."

F. Accounting

Section 74.59(g) requires that licensees establish auditable records sufficient to demonstrate that the requirements of 10 CFR 74.51, 74.53, 74.55, 74.57, and 74.59 have been met. The applicant's accounting programs should establish and maintain records in an auditable form, available for inspection, for at least 3 years, unless a longer retention time is required by 10 CFR Part 75. The programs should specify in what form those records will be kept. The programs should provide adequate safeguards against tampering with and loss of records. (SRP Chapter 11.8 provides additional guidance on records management.)

The applicant's programs for recordkeeping should be found acceptable if they meet the criteria specified in Chapter 4.6 of Revision 1 to NUREG–1280. NUREG/BR–0006,

"Instructions for Completing Nuclear Material Transaction Reports and Concise Note Forms (Form DOE/NRC 741, 741A, and 740M)," and NUREG/BR–0007, "Instructions for Completing Nuclear Balance Report and Physical Inventory Listing (Forms DOE/NRC 742 and 742C)," provide additional guidance on the use of NRC-required forms for reporting transactions involving nuclear materials.

G. Shipments and Receipts

Section 74.59(h)(1) requires that licensees establish procedures for the measurement of shipments and receipts and for the review, evaluation, and investigation of shipper-receiver differences (SRD). The applicant should establish a program to timely and accurately quantify the content of SSNM and other nuclear materials in shipments and receipts. The program should provide:

i. Accurate identification and measurements of the quantity shipped and received;
ii. Clear definition of statistically significant SRD;
iii. Review and evaluation of SRD;
iv. Investigation and corrective actions when SRD exceed the specified limit; and
v. Documentation of SRD evaluations, investigations, and corrective actions.

The program should identify a reasonable time frame for completing the verification measurements of receipts. The documentation of shipments and receipts should be completed and transmitted within the time frame specified in NUREG/BR-0006. The applicant's program for shipper-receiver comparisons should be found acceptable if it meets the criteria specified in Chapter 4.7 of Revision 1 to NUREG–1280.

H. Scrap Control

Section 74.59(h)(2) establishes requirements regarding the segregation of internally generated scrap from scrap received from other nuclear facilities and regarding the prompt recovery of scrap that cannot be measured to within ±5 percent. The applicant's scrap control program should ensure that:

i. Internally generated scrap and scrap from other licensees or contractors are segregated until accountability is established; and

ii. Any scrap measured with a standard deviation greater than 5 percent of the measured amount is recovered, so that the results are segregated by inventory period and received within 6 months of the end of the inventory period in which the scrap was generated, except where it can be demonstrated that the scrap measurement uncertainty will not cause noncompliance with 10 CFR 74.59(e)(5).

iii. Scrap and waste will be stored only in approved locations and disposed only by approved methods;

iv. The facility's recovery capability is adequate to preclude buildup of excess amounts of scrap;

v. Special handling procedures for waste or independent measurement verification are described;

vi. Scrap generated onsite and offsite are adequately separate, and the individuals performing measurements on scrap materials have the authority to reject containers that demonstrably violate segregation practices; and

vii. Procedures and processes for offsite scrap recovery are discussed.

The applicant's scrap control program should be found acceptable if it meets the criteria specified in Chapter 4.8 of Revision 1 to NUREG–1280.

I. Human Errors

Section 74.59(h)(3) requires that the licensees incorporate checks and balances in the MC&A system to control the rate of human errors in MC&A information. The applicant's program should minimize human errors in the following areas:

i. The development and management of MC&A procedures, especially procedures for processing MC&A data;

ii. The use of job performance aids, such as illustrations and graphs;

iii. The methods and technologies used to automate MC&A functions; and

iv. The quality control system used to monitor the frequency and types of human errors.

The applicant's human error controls should be found acceptable if they meet the format and criteria specified in Chapter 4.9 of Revision 1 to NUREG–1280. (SRP Chapter12 provides additional guidance on human factors.)

J. Independent Assessment

Section 74.59(h)(4) of Title 10 requires that the licensees independently assess the past performance of MC&A program. The applicant's audit and assessment program should be acceptable if it:

i. Independently assesses the effectiveness of the MC&A system at least every 12 months;

ii. Documents the results of the assessment;

iii. Documents management's findings on whether the MC&A system is effective;

iv. Documents any actions taken on recommendations from prior assessments; and

v. Assesses the measurement control program of any outside contractor laboratory performing MC&A measurements for the applicant.

The selection of assessment team members should ensure and balance independence and knowledge in the MC&A area. An assessment by a third-party organization is not required, but is often an effective way to bring both knowledge and independence to the assessment effort (SRP Section 11.6 provides additional guidance on audits & assessments).

The applicant's program for assessing and reviewing the MC&A program should be found acceptable if it meets the criteria in Chapter 4.10 of Revision 1 to NUREG–1280.

K. SSNM Custodianship

Section 74.59(h)(5) establishes requirements for assigning custodial responsibility for SSNM. The applicant's assignment of custodial responsibility should ensure that such responsibility is clearly defined and can be effectively executed. The applicant's SSNM custodial assignments should be found acceptable if they meet the criteria specified in Chapter 4.11 of Revision 1 to NUREG–1280.

13.2.5 REVIEW PROCEDURES

13.2.5.1 Acceptance Review

The primary reviewer should perform an acceptance review to determine if the license application adequately addresses the items in Section 13.2.3, "Areas of Review," for either the construction approval review or the review for a license to possess and use SNM.

Guidance specific to the construction approval review and the review for a license to possess and use SNM is provided below.

A. Construction Approval

Specifically, the safeguards assessment of the design basis should address Section 13.2.3 at the level of commitments and program goals.

B. License To Possess and Use SNM

Specifically, the application should address Section 13.2.3 in full and should include the fundamental nuclear material control plan (FNMCP). The secondary and supporting reviewers should confirm that the FNMCP is consistent with descriptions in other sections of the application. Information provided in the FNMCP should be of comparable quality and

detail, and should not contradict or adversely affect information contained in other sections of this application.

If the primary reviewer verifies that MC&A is adequately addressed (construction approval review or the license to posses and use SNM), the primary reviewer should accept the application for the safety evaluation in Section 13.2.5.2. If the primary reviewer identifies significant deficiencies in the material provided, the primary reviewer should request that the applicant submit additional information prior to the start of the safety evaluation.

13.2.5.2 Safety Evaluation

After determining that the application is acceptable for review in accordance with either Section 13.2.5.1(A) (construction approval) or 13.2.5.1(B) (license to possess and use SNM), the primary reviewer should perform a safety evaluation against the acceptance criteria described in Section 13.2.4. On the basis of its review, the staff may request that the applicant provide additional information or modify the application to meet those acceptance criteria.

Guidance specific to the construction approval review and the review for a license to possess and use SNM is provided below.

A. Construction Approval

The primary reviewer should establish that the applicant's design basis for MC&A and related commitments will lead to an FNMCP that will meet or exceed the regulatory acceptance criteria in Section 13.2.4.

B. License To Possess and Use SNM

The primary reviewer should establish that the applicant's FNMCP provides reasonable assurance in satisfying the acceptance criteria in Section 13.2.4. The primary reviewer should also ensure that adequate documentation is provided.

For an existing facility, the NRC reviewers may wish to visit the site and hold discussions with facility personnel to gain a better understanding of the safeguards systems. For a planned facility, the NRC reviewers may wish to meet with the design team to gain a better understanding of the process, its potential safeguards concerns, and safeguards system/design approaches.

When the evaluation is complete, the primary reviewer, with assistance from other reviewers, should prepare input for the SER as described in Section 13.2.6 using the acceptance criteria from Section 13.2.4.

13.2.6 EVALUATION FINDINGS

The primary reviewer should document the safety evaluation by preparing material suitable for inclusion in the SER. The primary reviewer should describe the review, explain the basis for the findings, and state the conclusions.

The staff could document the safety evaluation for the application for the construction approval review as follows:

> *The staff reviewed the license application for construction approval for [insert name of facility] according to Section 13.2 of NUREG–1718. The staff evaluated [Insert a summary statement of what was evaluated] and found that [summarize the findings].*
>
> *The staff concluded that the applicant provided adequate commitments and goals for the design basis as it applies to material control and accounting and that these commitments and goals should result in a MC&A program and an FNMCP that will meet or exceed the regulatory acceptance criteria outlined in NUREG–1718. As a result, the applicant meets the requirements in the area of MC&A to approve construction of the proposed facility under 10 CFR Part 70.*

The staff could document the safety evaluation for the review for the license to possess and use SNM as follows:

> *The staff reviewed the license application for [insert facility name] to possess and use SNM according to Section 13.2 of NUREG–1718. The staff evaluated [Insert a summary statement of what was evaluated] and found [insert a description of the findings]. Based on the review of the license application, the NRC staff concluded that the applicant's FNMCP satisfies the staff's acceptance criteria. Specifically, the applicant has satisfactorily addressed the applicable regulatory requirements in 10 CFR 74.51, 74.53, 74.55, 74.57, and 74.59.*

13.2.7 REFERENCES

Code of Federal Regulations, *Title 10, Energy,* Part 74, Subpart E, "Formula Quantities of Strategic Special Nuclear Material."

Jaech, John L. *Statistical Methods in Nuclear Material Control.* TID-26298. Washington, D.C: Technical Information Center, U.S. Atomic Energy Commission. 1973.

Nuclear Regulatory Commission (U.S.) (NRC). NUREG–0228, "Calorimetric Assay of Plutonium." NRC: Washington, D.C. May 1977.

———. NUREG–0256, " Methods for the Accountability of Mixed Oxide." NRC: Washington, D.C. April 1977.

———. NUREG–1280, Rev. 1, "Standard Format and Content Acceptance Criteria for the Material Control and Accounting (MC&A) Reform Amendment." NRC: Washington, D.C. April 1995.

———. NUREG/BR–0006, Revision 3, "Instructions for Completing Nuclear Material Transaction Reports and Concise Note Forms (Forms DOE/NRC 741, 741A, and 740M)." NRC: Washington, D.C. January 1989.

———. NUREG/BR–0007, Revision 2, "Instructions for Completing Nuclear Balance Report and Physical Inventory Listing (Forms DOE/NRC 742, and 742C)." NRC: Washington, D.C. July 1989.

———. NUREG/BR–0096, "Instructions and Guidance for Completing Physical Inventory Summary Reports (NRC Form 327)." NRC: Washington, D.C. October 1992.

———. NUREG/CR–0602, "Active Nondestructive Assay of Nuclear Materials." NRC: Washington, D.C. January 1981.

———. NUREG/CR–2078, "Handbook of Nuclear Safeguards Measurement Methods." NRC: Washington, D.C. September 1983.

———. NUREG/CR–4604, "Statistical Methods for Nuclear Material Management." NRC: Washington, D.C. December 1988.

———. NUREG/CR–5550, "Passive Nondestructive Assay of Nuclear Materials." NRC: Washington, D.C. March 1991.

13.2.8 DEFINITIONS

formula kilogram (FKG): SSNM in any combination in a quantity of 1,000 grams computed by the formula: grams = (grams contained U–235) + 2.5 (grams U–233 + grams plutonium).

formula quantity: SSNM in any combination in a quantity of 5,000 grams or more computed by the formula: grams = (grams contained U–235) + 2.5 (grams U–233 + grams plutonium).

14.0 EMERGENCY MANAGEMENT

14.1 PURPOSE OF REVIEW

The purpose of this review is to determine if the applicant established, before the start of operations, adequate emergency management facilities and procedures to protect the public, the workers, and the environment. The applicant should also show how the emergency management facilities and procedures comply with NRC regulations while coexisting with the U.S. Department of Energy's (DOE's) emergency planning requirements, as applicable.

An emergency plan is required when an evaluation shows that the maximum dose to a member of the public offsite due to a release of radioactive materials would exceed 0.01 Sv (1 rem) effective dose equivalent. This section applies to facilities authorized to possess enriched uranium (U) or plutonium (Pu) for which a criticality accident alarm system is required, uranium hexafluoride (UF_6) in excess of 50 kg (110 lb) in a single container or 1,000 kg (2,200 lb) total, or Pu in excess of 2 Ci in unsealed form or on foils or plated sources.

Emergency capability is incorporated into the baseline design criteria of 10 CFR Part 70, as revised, and is intended to ensure control of licensed material, evacuation of personnel, and availability of emergency facilities.

14.2 RESPONSIBILITY FOR REVIEW

Primary: Emergency Preparedness Specialist

Secondary: Project Manager

Supporting: Regional Emergency Preparedness Inspector
Fuel Facility Inspection staff

14.3 AREAS OF REVIEW

NRC staff should review the applicant's submittal for an acceptable level of evidence of planning for emergency preparedness directed at situations involving real or potential radiological hazards. The review should address those design features, facilities, functions, and equipment that may affect some aspect of emergency planning or the capability of an applicant to cope with plant emergencies. In addition, the review should address coordination with offsite organizations. The staff should either review the emergency plan made in accordance with 10 CFR 70.22(i)(1)(ii) and with the guidance contained in the acceptance criteria below, or should review the applicant's evaluation that demonstrates that the maximum dose to a member of the public would not exceed 0.01 Sv (1 rem) effective dose equivalent in accordance with 10 CFR 70.22(i)(1)(i).

The NRC staff reviewer should review the material presented, as described below.

14.3.1 Specific Items to be Reviewed When the Applicant Submits an Evaluation

If the applicant submits an evaluation to demonstrate that the maximum dose to a member of the public would not exceed 0.01 Sv (1 rem) effective dose equivalent, staff should review the evaluation against 10 CFR 70.22(i)(1)(i), and NUREG–1140, "A Regulatory Analysis of Emergency Preparedness for Fuel Cycle and Other Radioactive Material Licensees." NUREG/CR–6410, "Nuclear Fuel Cycle Facility Accident Analysis Handbook," also contains useful information. Areas to be evaluated should include the following:

A. A description of the facility and proposed licensed activities;
B. Types of materials used, including both radioactive material and hazardous chemicals;
C. Types of accidents;
D. Detection of accidents;
E. Site-specific information used to support the evaluation;
F. An evaluation of the consequences, both onsite and offsite; and
G. One or more of the factors provided in 10 CFR 70.22(i)(2).

14.3.2 Specific Items to be Reviewed When the Applicant Submits an Emergency Plan

If the applicant submits an emergency plan, staff should evaluate the emergency plan against 10 CFR 70.22(i)(1)(ii) and Regulatory Guide 3.67, "Standard Format and Content for Emergency Plans for Fuel Cycle and Materials Facilities," which provides a standard format and content for an emergency plan. Elements in the emergency plan should include:

A. Facility description (including both onsite and offsite emergency facilities);
B. Types of accidents;
C. Classification of accidents;
D. Detection of accidents;
E. Mitigation of consequences (and safe shutdown);
F. Assessment of releases (both radioactive materials and hazards chemicals);
G. Responsibilities of applicant;
H. Notification and coordination;
I. Information to be communicated and parties to be contacted;
J. Training;
K. Safe shutdown (recovery and plant restoration);
L. Exercises and drills;
M. Hazardous chemicals inventories and locations; and
N. Responsibilities for developing and maintaining the emergency program and its procedures.

14.4 ACCEPTANCE CRITERIA

14.4.1 Regulatory Requirements

10 CFR Part 70.22(i)(1)(i) specifies when an emergency plan does not have to be submitted to the NRC and, if an emergency plan is required to be submitted, 10 CFR Part 70.22(i)(3) contains the information that must be included in the emergency plan.

10 CFR Part 70.64(a)(6) requires that applicants address the control of licensed material, evacuation of personnel, and availability of onsite emergency facilities that facilitate the use of available offsite services.

14.4.2 Regulatory Guidance

Regulatory guidance for preparing an emergency plan includes:

Nuclear Regulatory Commission (U.S.) (NRC). NUREG–1140, "A Regulatory Analysis of Emergency Preparedness for Fuel Cycle and Other Radioactive Materials." NRC: Washington, D.C. 1988.

———. NUREG/CR–6410, "Nuclear Fuel Cycle Facility Accident Analysis Handbook." NRC: Washington, D.C. 1998.

———. Regulatory Guide 3.67, "Standard Format and Content for Emergency Plans for Fuel Cycle and Materials Facilities." NRC: Washington, D.C. 1992.

14.4.3 Regulatory Acceptance Criteria

If the applicant's proposed total possession limit for radioactive material exceeds the emergency plan threshold in 10 CFR 70.22(i)(1), the applicant may submit either a site-specific evaluation that demonstrates maximum public exposure is less that the limits in 70.22(i)(1)(i), or an emergency plan. If the applicant submits an evaluation, the regulatory acceptance criteria in Section 14.4.3.1 apply. If the applicant submits an emergency plan, the regulatory acceptance criteria in Section 14.4.3.2 apply.

14.4.3.1 Evaluation

The adequacy of the applicant's evaluation that the maximum dose to a member of the public offsite due to a release of radioactive materials would not exceed 0.01 Sv (1 rem) or an intake of 2 mg (7.04×10^{-5} ounces) of soluble uranium should be evaluated by the reviewer against the requirements in 10 CFR Part 70.22(i)(2) and the specific criteria given in this section of the SRP. The applicant's evaluation should be acceptable if the regulatory requirements and the following criteria are met:

14.4.3.1.1 Facility Description

The applicant's evaluation includes a description of the facility and site, the area near the site, and the licensed activities conducted at the facility sufficient to support the evaluation. The facility description should be acceptable if it includes:

A. A detailed drawing of the site showing (1) onsite and near offsite (within 1.6 km [1 mile]) structures with building numbers and labels, (2) roads and parking lots onsite and main roads near the site, (3) site boundaries showing fences and gates, (4) major site features, (5) water bodies within approximately 1.6 km (1mile), and (6) the location(s) of nearest residence(s);

B. The stack heights, typical stack flow rates, and the efficiencies of any emission control devices; and

C. A general description of the proposed licensed and other major activities conducted at the facility, and the type, form, solubility, and maximum quantities of radioactive and other hazardous material normally onsite.

14.4.3.1.2 Types of Accidents

The applicant's evaluation describes each type of accident identified by the Integrated Safety Analysis (ISA) Summary that has the maximum offsite consequences exceeding the limit of 10 CFR 70.22(i)(1)(i). The types of accidents should be acceptable if they include:

A. The process and physical location where each accident could occur;

B. Complicating factors and possible onsite and offsite consequences, including nonradioactive hazardous material released; and

C. The accident sequence that has the potential for the greatest radiological and toxic chemical impact.

14.4.3.1.3 Detection of Accidents

The applicant's evaluation should be acceptable if, for each type of accident identified, the applicant identifies:

A. The means of detecting the accident;
B. The means of detecting any release of radioactive or other hazardous material;
C. The means of alerting the operating staff; and
D. The anticipated response of the operating staff.

14.4.3.1.4 Maximum Public Exposure

In addition to the acceptance criteria in Sections 14.4.3.1–14.4.3.3, the applicant's evaluation should be acceptable if it includes a description of the following information sufficient to allow the primary reviewer to independently verify the calculations:

A. Type of accident (e.g., fire, exposure, chemical release, nuclear criticality);

B. Location of accident;

C. Maximum source term;

D. Solubility of material;

E. Facility design or engineered safety features in the facility and the proposed release fraction;

F. Location and distance of the nearest member of the public to the facility;

G. Dose model used and the process used to verify the reliability of the model and the validity of the assumptions;

H. Assumed worst case weather condition; and

I. Maximum calculated dose to a member of the public at the facility boundary.

The applicant's site-specific evaluation should include a list and a description of the factors in 10 CFR 70.22(i)(2) that the applicant considered in evaluating maximum dose to members of the public. The applicant should demonstrate why the factors used in the evaluation are appropriate when compared with the factors in NUREG–1140. If the factors and evaluation show that the maximum dose to a member of the public offsite due to a release of radioactive materials could not exceed 0.01 Sv (1 rem) effective dose equivalent or the intake of soluble uranium of 2 mg (7.04×10^{-5} ounces), no emergency plan is required in accordance with 10 CFR 70.22(i)(1)(i). If the primary reviewer finds that the maximum dose to a member of the public could exceed 0.01 Sv (1 rem), the applicant must either submit an emergency plan consistent with the requirements in Section 14.4.3.2, or decrease the total possession limit for radioactive material below the emergency plan threshold in 10 CFR 70.22(i)(1).

14.4.3.2 Criteria When an Emergency Plan is Required

The adequacy of the applicant's proposed emergency plan should be evaluated by the reviewer against the requirements in 10 CFR Part 70.22(i)(3) and the specific criteria given in Section 14.4.3.2 of the SRP. The applicant's emergency plan should be acceptable if the regulatory requirements and the criteria in the following sections are met.

14.4.3.2.1 Facility Description

14.4.3.2.1.1 Operational Facilities

The applicant's emergency plan includes a description of the facility and site, the area near the site, and the licensed activities conducted at the facility sufficient to support emergency management activities. The description should be acceptable if it includes:

A. A detailed drawing of the site showing:

   i. Onsite and near offsite (within 1.6 km [1 mile]) structures with building numbers and labels;

   ii. Roads and parking lots onsite and main roads near the site;

   iii. Site boundaries showing fences and gates;

   iv. Major site features; and

   v. Water bodies within approximately 1.6 km (1 mile).

B. A general area map (approximately 16 km [10 mile] radius), a United States Geological Survey topographical quadrangle (7½ minute series; including the adjacent quadrangle(s) if the site is located less than 1.6 km [1 mile] from the edge of the quadrangle), and a map or aerial photograph indicating onsite structures and near-site structures (about 1.6 km [1 mile] radius). The general area map indicates the location of sensitive facilities near the site, such as hospitals, schools, nursing homes, nearest residence(s), fire departments, prisons, environmental sampling locations, and other structures and facilities important to emergency management.

C. The stack heights, typical stack flow rates, and the efficiencies of any emission control devices.

D. A general description of licensed and other major activities conducted at the facility and the type, form, and quantities of radioactive and other hazardous materials normally onsite by location (use and storage) and building, including the hazardous characteristics (exposure rates, pH, temperature, and other characteristics) important to emergency management.

E. Certification that the applicant has met responsibilities under the Emergency Planning and Community Right To Know Act of 1986, Title III, Public Law 99–499, in accordance with 10 CFR 70.22(i)(3)(xiii).

14.4.3.2.2 Onsite and Offsite Emergency Facilities

The applicant's emergency plan includes a list and description of onsite and offsite facilities that could be relied upon in the event of an emergency. The onsite and offsite emergency facilities should be acceptable if they include:

A. A list and description of both onsite and offsite emergency facilities by location and purpose of the facility.

B. A description of emergency monitoring equipment that is available for personnel and area monitoring, as well as that for assessing the release of radioactive or hazardous materials to the environment.

C. A description of the onsite and offsite services that support emergency response operations, including:

   i. Decontamination facilities;
   ii. Medical treatment facilities;
   iii. First aid personnel;
   iv. Firefighters;
   v. Law enforcement assistance; and
   vi. Ambulance services.

D. In addition, the applicant's emergency facilities, equipment, and resources are ready to support emergency response operations, including:

   i. Facilities of adequate size and appropriate location that are designated, equipped, and ready for emergency use;

   ii. Adequate backup facilities required by the emergency plan and supporting documents that are available and ready for use;

   iii. Appropriate equipment and supplies necessary to support emergency response activities that are accessible during accident conditions;

   iv. Emergency equipment that is inventoried, tested, and serviced on a periodic basis to ensure accountability and reliability;

   v. Sufficient reliable primary and backup communications channels that are available to accommodate emergency needs;

   vi. Offsite emergency resources and services that are identified and are ready to ensure their timely mobilization and use;

   vii. Operational engineering information, such as current as-built drawings and procedures, that are readily available in the emergency facilities;

viii. Sufficient equipment for personnel protection and monitoring; and

ix. Systems in place to alert onsite and offsite personnel in the event of an emergency.

14.4.3.2.3 Types of Accidents

The applicant's emergency plan includes a description for each accident identified by the ISA Summary (e.g., by reference) for which protective actions may be needed. The types of accidents should be acceptable if they include:

A. The process and physical location(s) where accidents could occur;

B. Complicating factors and possible onsite and offsite consequences, including nonradioactive hazardous material releases that could affect emergency response efforts;

C. The accident sequence that has the potential for the greatest radiological and toxic chemical impact; and

D. Figure(s) projecting dose and toxic substance concentration as a function of distance and time for various meteorological stability classes.

14.4.3.2.4 Classification of Accidents

The applicant's emergency classification system for classifying events at the facility should be acceptable if it includes:

A. The following two event classifications:

   i. "Alert": Events that may occur, are in progress, or have occurred that could lead to a release of radioactive material or hazardous chemicals incident to the process, but the release is not expected to require a response by an offsite response organization to protect persons offsite; and

   ii. "Site area emergency": Events that may occur, are in progress, or have occurred that could lead to a significant release of radioactive material or hazardous chemicals incident to the process that could require a response by offsite emergency response organizations to protect persons offsite.

B. For each accident in the emergency plan, the classification (alert or site area emergency) that is expected for each accident is identified.

C. The emergency plan specifies emergency action levels (EALs) at which an alert or site area emergency will be declared. EALs are specific conditions that require emergency response measures to be performed. The applicant's EALs are consistent with Appendix A of Regulatory Guide 3.67 and are compared with the Environmental Protection Agency's

Protective Action Guides. Transportation accidents more than 1.6 km (1 mile) from the facility are not classified.

D. The emergency plan designates the personnel positions and alternates with the responsibility for accident classification during normal and backshift hours.

14.4.3.2.5 Detection of Accidents

The emergency plan should be acceptable if it describes, for each type of accident identified:

A. The means of detecting the accident;
B. The means of detecting any release of radioactive or other hazardous material;
C. The means of alerting the operating staff; and
D. The anticipated response of the operating staff.

14.4.3.2.6 Mitigation of Consequences

The applicant's emergency plan should be acceptable if it adequately describes mitigation of consequences, including the following:

A. The emergency plan describes for each accident identified, adequate measures and equipment for safe shutdown and for mitigating the consequences to workers onsite and offsite as well as to the public offsite.

B. For impending danger from an accident initiator, the emergency plan describes the following:

   i. The criteria that will be used to determine whether a single process or the entire facility will be shut down;

   ii. The steps that will be taken to ensure a safe, orderly shutdown of a single process or the entire facility;

   iii. The approximate time required to accomplish a safe shutdown of processes; and

   iv. The compensatory measures required for safety during the shutdown period following an accident.

14.4.3.2.7 Assessment of Releases

The applicant's emergency plan should be acceptable if it describes how the applicant assesses any radioactive material or hazardous chemical releases, including:

A. The applicant's procedures to promptly and effectively assess the release of radioactive material or hazardous chemicals associated with the processing of radioactive material, including:

i. The procedures for estimating or measuring the release rate or source term;

ii. Valid computer codes used to project doses or concentrations to the public or environment and associated assumptions, along with adequate justifications to show the validity of the assumptions;

iii. The types, methods, frequencies, implementation time, and other details of onsite and offsite sampling and monitoring that will be performed to assess a release of radioactive material or hazardous chemicals; and

iv. The method for assessing collateral damage to the facility, especially safety controls.

B. The applicant's procedure for validating any code used to assess releases of radioactive material or hazardous chemicals.

14.4.3.2.8 Responsibilities

The applicant's emergency plan should be acceptable if it describes the emergency response organization and administration that ensures effective planning, implementation, and control of emergency preparedness activities and meets the following criteria:

A. The organizational structure and chain of command are clearly defined;

B. Staffing and resources are sufficient to accomplish assigned tasks;

C. Responsibilities and authority for each management, supervisory, and professional position are clearly defined. Responsibility is assigned for the coordination of onsite and offsite radiation/hazardous material emergency response preparedness;

D. Interfaces with supporting groups, both onsite and offsite, are clearly defined;

E. Mutual cooperation agreements exist with local agencies such as fire, police, ambulance/rescue, and medical units;

F. Plant management measures include audit and assessment (SRP Section 15.6) of emergency preparedness to ensure site readiness to handle emergencies and to identify and correct problems;

G. The onsite emergency response organization as described provides reasonable assurance of effective command and control of the site during the assessment, mitigation, and recovery phase of an accident;

H. The emergency public information staff provides advance and ongoing information to the media and public on subjects that would be discussed during an emergency, such as radiation hazards, chemical hazards, site operation, and site emergency plans; and

I. The schedule of emergency preparedness procedure development provides for availability of procedures to support startup and operation of new processes/facilities onsite.

14.4.3.2.9 Notification and Coordination

The applicant's emergency plan should be acceptable if it adequately describes the applicant's notification and coordination procedures, including:

A. Reasonable assurance that emergency notification procedures will enable the emergency organization to correctly classify emergencies, notify emergency response personnel, and initiate or recommend appropriate actions in a timely manner, based on the following:

   i. Classification of emergency events are based on the current emergency plan;

   ii. Notification procedures minimize distractions of shift operating personnel and include concise, preformatted messages. Appropriate followup messages to offsite authorities are issued in a timely manner;

   iii. Information on the nature and magnitude of the hazards is made available to appropriate emergency response personnel;

   iv. Radiological and chemical source term data are available to the command post, technical support center, emergency operations center, and appropriate State personnel, in cooperation with NRC;

   v. When available, offsite field monitoring data are logged, compared with source term data, and used in the protective action recommendation process;

   vi. Protective Action Guides are available and used by appropriate personnel in a timely manner;

   vii. The emergency public information program ensures timely dissemination of accurate, reliable, and understandable information;

   viii. Systems are in place, if required, to alert, notify, and mobilize onsite and offsite response personnel in the event of an emergency;

   ix. Notification of and coordination with responsible parties when some personnel, equipment, and facility components are not available.

B. How and by whom the following actions will promptly and effectively be taken:

   i. Decision to declare an alert or site area emergency;

   ii. Activation of onsite emergency response organization during all shifts;

iii. Prompt notification of offsite response authorities that an alert or site area emergency has been declared, including the licensee's initial recommendation for offsite protective actions (normally within 15 minutes);

iv. Notification to the NRC Operations Center (as soon as possible and, in any case, no later than1 hour after a declared emergency);

v. Decision on what onsite protective actions to initiate;

vi. Decision on what offsite protective actions to recommend;

vii. Decision to request support from offsite organizations; and

viii. Decision to terminate the emergency or enter recovery mode.

14.4.3.2.10 Information To Be Communicated

The applicant's emergency plan should be acceptable if it describes the information to be communicated during an emergency and includes:

A. A standard reporting checklist to facilitate timely notification;

B. The types of information to be provided concerning facility status, radioactive or hazardous chemical releases, and protective action recommendations;

C. A description of preplanned protective action recommendations to be made to each appropriate offsite organization;

D. The offsite officials to be notified, as a function of the classification of the event; and

E. The recommended actions to be implemented by offsite organizations for each accident treated in the emergency plan.

14.4.3.2.11 Training

The applicant's emergency plan includes an adequate training program for onsite and offsite emergency response personnel to ensure knowledge of the emergency plan, assigned duties, and effective response to an actual emergency. The training program should be acceptable if it includes:

A. The topics and general content of training programs used for training the onsite and offsite emergency response personnel to satisfy the objectives described above;

B. The administration of the training program, including responsibility for training, the positions to be trained, the schedules for training, the frequency of retraining, the use of team training, and the estimated number of hours of initial training and retraining;

C. The training to be provided on the use of protective equipment such as respirators, protective clothing, monitoring devices, and other equipment used in emergency response;

D. The training program for onsite personnel who are not members of the emergency response staff; and

E. The instructions and tours that will be offered to fire, police, medical, and other emergency personnel to the extent necessary commensurate with the results of the ISA.

14.4.3.2.12 Safe Shutdown (Recovery and Plant Restoration)

The applicant's emergency plan describes the plans for adequately restoring the facility to a safe status after an accident and recovery after an emergency. The safe shutdown should be acceptable if it includes:

A. Appropriate methods and responsibilities for assessing the damage to and the status of the facility's capabilities to safely control radioactive material or hazardous chemicals associated with the process;

B. Procedures for promptly determining the actions necessary to reduce any ongoing releases of radioactive or other hazardous chemicals and to prevent further incidents;

C. Provisions for promptly and effectively accomplishing required restoration action; and

D. Descriptions of the key positions in the recovery organization.

14.4.3.2.13 Exercises and Drills

The applicant's emergency plan commits to conducting exercises and drills in a manner that demonstrates the capability of the organization to plan and perform an effective response to an emergency. The commitment should be acceptable if it demonstrates that:

A. Task-related knowledge is demonstrated through periodic participation by all qualified individuals for each position in the emergency response organization;

B. Drill performance is assessed against specific scenario objectives using postulated accidents that adequately test personnel, equipment, and resources, including previously identified weaknesses;

C. Effective player, controller, evaluator, and observer predrill briefings are conducted;

D. Scenario data and exercise messages provided by the controllers effectively maintain the timeline and do not interfere with the emergency organization's response to exercise scenario events, except where safety considerations are involved;

E. Trained evaluators are used to identify and record participant performance, scenario strengths and deficiencies, and equipment problems;

F. Prestaging of equipment and personnel is minimized to realistically test the activation and staffing of emergency facilities;

G. Critiques are conducted in a timely manner and include a followup plan for correcting identified weaknesses and improving training effectiveness;

H. Emergency drills demonstrate that resources are effectively used to control the site, to mitigate further damage, to control radiological/chemical releases, to perform required onsite activities under simulated radiation/airborne and other emergency conditions, to provide accurate assessments and status during an accident, and to initiate recovery;

I. Emergency drills demonstrate personnel protection measures, including controlling and minimizing hazards to individuals during events such as fires, medical emergencies, mitigation activities, search and rescue, and other similar events;

J. The emergency drill demonstrates that onsite communications effectively support emergency response activities;

K. The emergency drill demonstrates that the emergency public information organization disseminates accurate, reliable, timely, and understandable information;

L. Provisions are made for conducting quarterly communications checks with offsite response organizations; and

M. Offsite organizations are invited to participate in the biennial onsite exercise that tests the major elements of the emergency plan and response organizations.

14.4.3.2.14 Responsibilities for Developing and Maintaining the Emergency Program and Its Procedures

The applicant's emergency plan describes the responsibilities for developing and maintaining the emergency program and its procedures. The responsibilities should be acceptable if they include:

A. The means for ensuring that the revisions to the emergency plan and the procedures that implement the emergency plan are adequately prepared, kept up to date normally (within 30 days of any changes), and distributed to all affected parties, including the NRC.

B. The provisions for approving the implementing emergency procedures, making and distributing changes to the procedures, and ensuring that each person responsible for an emergency response function has immediate access to a current copy of emergency procedures.

C. The provisions for approval of changes to the emergency plan and procedures and a list of those individuals authorized to make these changes;

D. Procedures for allowing offsite response organizations 60 days to comment on the emergency plan (except those changes allowed by 10 CFR 70.69(o)) before submitting it to the NRC, and for providing NRC any comments received within 60 days along with the plan; and

E. Procedures for modifying the emergency plan in accordance with 10 CFR 70.32(i).

14.5 REVIEW PROCEDURES

14.5.1 Acceptance Review

The primary reviewer should perform an acceptance review to determine if the application (construction or license) adequately addresses the items in Section 14.1.3, "Areas of Review."

Guidance specific to the construction approval review and the review for the license to possess and use special nuclear material (SNM) is provided below.

A. Construction Approval

The applicant is not expected to submit either an emergency plan as described in Section 14.3.2 or an evaluation as described in Section 14.3.1 with the portion of the license application submitted for the construction approval review. However, the primary reviewer should evaluate the safety assessment of the design basis to ensure that the commitments and program goals are appropriate for emergency protection at the design stage.

B. License To Possess and Use SNM

Specifically, the license application should either contain an evaluation as described in Section 14.3.1 or an emergency plan as described in Section 14.3.2.

If the primary reviewer verifies that emergency protection is adequately addressed in the application for construction approval or the license application, the primary reviewer should accept the application for the safety evaluation in Section 13.1.5.2. If the primary reviewer identifies significant deficiencies in the material provided, the primary reviewer should request that the applicant submit additional information prior to the start of the safety evaluation.

14.5.2 Safety Evaluation

After determining that the application is acceptable for review in accordance with either Section 14.5.1(A) (construction approval) or 14.5.1(B) (license to possess and use SNM), the primary reviewer should perform a safety evaluation against the acceptance criteria described in Section 14.4. On the basis of its review, the staff may request that the applicant provide additional information or modify the application to meet those acceptance criteria.

Guidance specific to the construction approval review and the review for a license to possess and use SNM is provided below.

A. Construction Approval

The primary reviewer should ensure that the design basis includes appropriate commitments for emergency protection at the design stage. For example, if the safety assessment of the design basis shows a dose to a member of the public that exceeds the limits in 10 CFR 70.22(i)(1)(i), the applicant should commit to providing an emergency plan with the license application.

B. License To Possess and Use SNM

i. No Emergency Plan

The primary reviewer should verify that the applicant's evaluation is consistent with the potential accident sequences described in the ISA Summary. The ISA reviewer and the primary reviewer should coordinate to ensure the resolution of any issues concerning the evaluation relative to ISA information. The final step for the primary reviewer should be to prepare a Safety Evaluation Report (SER) in accordance with Section 14.6 which either agrees with the applicant's conclusion that no emergency plan is required or indicates that the staff does not accept the applicant's evaluation and recommends that an emergency plan be required by the applicant.

ii. Emergency Plan

After it is determined that an acceptable application containing an emergency plan has been received from the applicant, the primary reviewer should conduct a complete review of the emergency plan and determine its acceptability in accordance with Section 14.4.3.2. The reviewer should verify that emergency planning is consistent with the potential accident sequences described in the ISA Summary. The ISA reviewer and emergency plan reviewer should coordinate to ensure the resolution of any issues concerning the emergency plan relative to ISA information. This information may be supplemented by a personal visit to the site by the primary reviewer and meetings with the applicant. The final step for the primary reviewer should be to prepare an SER in accordance with Section 14.6, "Evaluation Findings."

14.6 EVALUATION FINDINGS

The primary reviewer should document the safety evaluation by preparing material suitable for inclusion in the SER. The primary reviewer should describe the review, explain the basis for the findings, and state the conclusions.

The staff could document the safety evaluation for the construction approval review as follows:

The staff evaluated the portion of the license application submitted for construction approval for [insert facility name] in accordance with Chapter 14.0 of NUREG–1718. The staff evaluated [insert a summary statement of what was evaluated] and found that [insert a summary statement of the findings]. The NRC staff determined that the applicant's commitments, including the commitment to provide an emergency plan with the license application [if the applicant's design basis safety assessment shows it is required], are adequate to meet the requirements for construction approval in accordance with 10 CFR Part 70.

The staff could document the safety evaluation for the review for the license to possess and use SNM, where the applicant submits an emergency plan, as follows:

The staff evaluated the emergency plan submitted as part of the license application for [insert facility name] to possess and use SNM in accordance with Chapter 14.0 of NUREG–1718. The staff evaluated [insert a summary statement of what was evaluated] and found that [insert a summary statement of the findings]. In accordance with 10 CFR 70.22(i), the licensee commits to maintaining and executing an emergency plan for responding to the radiological hazards resulting from a release of radioactive material and to any associated chemical process hazards. NRC staff determined that the applicant's emergency plan is adequate to demonstrate compliance with 10 CFR 70.22(i), including: (1) the plant is properly configured to limit releases of radioactive materials in the event of an accident, (2) a capability exists for measuring and assessing the significance of accidental releases of radioactive materials, (3) appropriate emergency equipment and procedures are provided onsite to protect workers against radiation and other chemical hazards that might be encountered following an accident, (4) a notification system has been established for notifying Federal, State, and local government agencies and recommending appropriate protective actions to protect members of the public, and (5) necessary recovery actions are established for returning the plant to a safe condition following an accident. The requirements of the emergency plan are implemented through approved written procedures. Changes that decrease the effectiveness of the emergency plan may not be made without NRC approval. The NRC will be notified of other changes that do not decrease the effectiveness of the emergency plan within 6 months of the changes.

The NRC staff concluded that the applicant's emergency plan meets the requirements of 10 CFR 70.22(i).

14.7 REFERENCES

Environmental Protection Agency (U.S.) (EPA). EPA 400-R-92-001, "Manual of Protective Action Guides and Protective Actions for Nuclear Incidents." EPA: Wahsington, D.C.1992.

Nuclear Regulatory Commission (U.S.), Washington, D.C. "Part 30 Statements of Consideration and Emergency Preparedness for Fuel Cycle and Other Radioactive Material Licensees," *Federal Register:* Vol. 54, p. 14051. 1989.

Nuclear Regulatory Commission (U.S.) (NRC). NUREG–1140, "A Regulatory Analysis of Emergency Preparedness for Fuel Cycle and Other Radioactive Materials." NRC: Washington, D.C. 1988.

———. NUREG/BR–0150, Vol. 1, Rev. 4, RTM–96, "Response Technical Manual." NRC: Washington, D.C. 1996.

———. NUREG/CR–6410, "Nuclear Fuel Cycle Accident Analysis Handbook." NRC: Washington, D.C. 1998.

———. Regulatory Guide 3.67, "Standard Format and Content for Emergency Plans for Fuel Cycle and Materials Facilities." NRC: Washington, D.C. 1992.

15.0 MANAGEMENT MEASURES
15.1 QUALITY ASSURANCE

15.1.1 PURPOSE OF REVIEW

The purpose of this review is to establish that the applicant has a quality assurance (QA) program that will provide reasonable assurance against natural phenomena and the consequences of potential accidents through the QA program's application to the design, fabrication, construction, testing, and operation of the applicant's structures, systems, and components[1] (SSCs); the applicant is required to describe the QA program for construction approval under 10 CFR 70.22(f). This review also establishes that the applicant has a QA program that will provide reasonable assurance that all items relied on for safety[2] (IROFS) will be available and reliable to perform their designated safety functions when needed, which the applicant is required to describe as part of its license application under 10 CFR Part 70.

15.1.2 RESPONSIBILITY FOR REVIEW

Primary: QA Engineer/Specialist

Secondary: Project Manager

Supporting: Fuel Cycle Facility Inspector
Primary Reviewers of applicable SRP Chapters 5.0 through 15.0

15.1.3 AREAS OF REVIEW

The applicant is required to submit a description of the QA program for construction approval and should update the QA program when it applies for a license to possess and use special nuclear material (SNM). The areas of review should include:

---

[1]The QA program should be appropriately applied to all SSCs pending design process identification of the applicable QA or other controls and designation of principal SSCs. "Principal structures, systems, and components" are, by definition, IROFS (see Footnote 2). For the purposes of the review guidance provided under this section, references to IROFS are intended to include the principal SSCs identified in the application for construction approval (see 10 CFR 70.4 or the glossary to this SRP).

[2]"Items relied on for safety" is defined in 10 CFR Part 70, as revised, as "structures, systems, equipment, components, and activities of personnel that are relied on to prevent potential accidents at the facility that could exceed the performance requirements specified in § 70.61 or to mitigate their potential consequences."

Management Measures

A. Organization.
B. QA Function[3].
C. Design control.
D. Procurement document control.
E. Instructions, procedures[4], and drawings.
F. Document control.
G. Control of purchased items.
H. Identification and control of items.
I. Control of special processes.
J. Inspection.
K. Test control.
L. Control of measuring and test equipment.
M. Handling, storage, and shipping.
N. Inspection, test, and operating status.
O. Nonconformances.
P. Corrective action.
Q. QA records.
R. Audits and assessments[5].
S. Applicant's provisions for continuing QA.

15.1.4 ACCEPTANCE CRITERIA

15.1.4.1 Regulatory Requirements

The regulation, 10 CFR Part 70, requires that the applicant establish an appropriate QA program to ensure that all IROFS perform their designated safety functions and are continually available and reliable. The regulatory requirements for QA are addressed in the following:

> Nuclear Regulatory Commission (U.S.), Washington, D.C. "Domestic Licensing of Special Nuclear Material (10 CFR Part 70)." *Federal Register:* Vol. 64, No. 146. pp. 41338–41357. July 30, 1999.

In addition, an applicant to possess and use special nuclear material in a plutonium processing and fuel fabrication facility such as the mixed oxide (MOX) fuel fabrication facility is required,

---

[3]SRP Section 15.4 addresses training and qualification of plant personnel. Section G2 of SRP Appendix G on QA addresses training and qualification of other personnel.

[4]SRP Section 15.5 addresses plant procedures. Section G5 of SRP Appendix G on QA addresses other procedures.

[5]Guidance for audits and assessments is given in SRP Section 15.6 as referenced in SRP Appendix G on QA.

pursuant to § 70.22(f), to describe the QA program to be applied to the design, fabrication, construction, testing, and operation of the structures, systems, and components of the facility.

The footnote of § 70.22(f) states that the description of the QA program should include a discussion of how the criteria in Appendix B of 10 CFR Part 50 will be met.

The footnote to § 70.23(b) states that the criteria in Appendix B of Part 50 of this chapter will be used by the Commission in determining the adequacy of the QA program.

Additional pertinent regulatory requirements for identifying, controlling, and reporting of defects with a facility, activity, or basic component supplied to a facility licensed under 10 CFR Part 70 are addressed in the following:

Code of Federal Regulations, *Title 10, Energy,* Part 21, "Reporting of Defects and Noncompliances."

15.1.4.2 Regulatory Guidance

Guidance for QA is addressed in the following:

American Society of Mechanical Engineers (ASME). ASME NQA–1–1994, "Quality Assurance Requirements for Nuclear Facility Applications, as revised by the ASME NQA–1a–1995 Addenda." ASME: New York. 1994/1995.

Nuclear Regulatory Commission (U.S.) (NRC). Regulatory Guide 1.28, Revision 3, "Quality Assurance Program Requirements (Design and Construction)," NRC: Washington, D.C. August 1985.

Note that while the above guidance has separate sections for "requirements" and "guidance," NRC's regulatory QA requirements exist only in the applicable Commission regulations.

15.1.4.3 Regulatory Acceptance Criteria

The NRC reviewers should find that the applicant's QA program adequately addresses and satisfies the regulatory acceptance criteria below. The applicant may reference material in other sections of the license application, or incorporate material by reference, provided these references are clear and specific.

The applicant should identify the principal SSCs (construction approval review) or IROFS (review for a license to possess and use SNM) and the degree of their importance. The graded approach for the application of QA should be described unless the applicant chooses to apply the highest level of QA and quality control to all principal SSCs and IROFS.

For principal SSCs (construction approval review) or IROFS (license to possess and use SNM), the applicant should apply either Option A or Option B (whichever the applicant chooses for the construction approval review) as described below.

Management Measures

Option A. Address the regulatory acceptance criteria given in this section and provide a commitment to implement and maintain the QA program in conformance with the applicable "requirements" of Parts I and II of ASME–NQA–1–1994[6], as revised by the ASME NQA–1a–1995 Addenda or equivalent.

OR

Option B. Address the checklist provided in SRP Appendix G on QA.

Depending on the option chosen, the applicant should address the criteria specified below. That is, if Option A is used, the applicant should (a) include a commitment that it will implement and maintain its QA program to comply with the applicable "requirements" of ASME NQA–1–1994, as revised by the ASME NQA–1a–1995 Addenda (that is, the basic and supplemental "requirements" of Parts I and II, including Subpart 2.7), or equivalent and should (b) be responsive to the five regulatory acceptance criteria given below.

A. Organization

The applicant should describe the organizational structure and functional responsibilities and provide charts of the lines of responsibilities, interrelationships, and areas of responsibility and authority for all organizations performing activities relied on for safety, including the applicant's organization and, if applicable, the organization of the applicant's principal contractors (architect/engineer, constructor, construction manager, and/or operator). Persons or organizations responsible for ensuring that appropriate QA has been established and verifying that activities affecting quality/safety have been correctly performed should have sufficient authority, access to work areas, and organizational independence to carry out their responsibilities.

B. QA Function

QA should be well documented, planned, implemented, and maintained to ensure the availability and reliability of controls relied on for safety. It should be implemented during all phases of the facility's life. It should be functional prior to performing the Integrated Safety Analysis required by 10 CFR Part 70, as revised.

C. Applicant's Provisions for Continuing QA

The applicant's provisions for continuing QA should address review and updates based on reorganizations, revised activities, lessons learned, changes to applicable regulations, and other QA changes.

---

[6]This SRP section refers to regulatory QA requirements and ASME–NQA–1 "requirements." Regulatory QA requirements are given in the Part 70, as revised. ASME–NQA–1 "requirements" are the Basic and Supplementary Requirements given in Parts I and II of ASME NQA–1–1994, including Subpart 2.7, as revised by the ASME NQA–1a–1995 Addenda.

D. Management Measures

The applicant's QA program should describe how the applicable QA criteria contained in Sections 15.2, 15.3, 15.4, 15.5, 15.6, 15.7, and 15.8 of this review plan will be met.

E. Regulatory Guide 1.28

The applicant should address the appropriate guidance and NRC positions for determining if its QA program adequately meets the requirements of Appendix B to 10 CFR Part 50 as described in RG 1.28, "Quality Assurance Program Requirements (Design and Construction)."

If Option B , as appropriate, is used, the application should address the checklist items in SRP Appendix G on QA, and the additional reviewer guidance and NRC positions for determining if the applicant's QA program adequately meets the requirements of Appendix B to 10 CFR Part 50 as described in RG 1.28, "Quality Assurance Program Requirements (Design and Construction)."

"If the applicant chooses to apply graded QA to principal SSCs, its QA program needs to describe the following four essential elements of the graded QA process (this applies whether the applicant selects Option A or Option B):

A. Categorization of SSCs: A process that determines the safety significance of SSCs in a reasonable and consistent manner, including the use of both traditional engineering (deterministic methods) and probabilistic evaluations.

B. Identification of QA Controls: The identification and implementation of appropriate QA controls for principal SSCs, or groups of SSCs, according to the safety function and safety significance. These controls need to maintain reasonable confidence in equipment performance and to support the graded QA corrective action feedback process.

C. Feedback Mechanisms: Provisions for a feedback process to adjust graded QA controls need to be described as well as provisions for reassessing the QA controls when new information becomes available through adverse trends or nonconformance reporting.

Provisions for an effective root cause analysis and corrective action process as a result of the feedback process should be described. Provisions should also be described for evaluating common cause/mode failures. The licensee corrective action efforts should determine, as a minimum, the apparent cause of repetitive failures of SSCs under the graded QA controls so that it can be decided whether graded QA controls should be adjusted. In some instances, a failure may result in an unanticipated event and may cause the categorization of the SSC to be changed.

D. Reassessing Safety Significance: A means for reassessing SSC safety significance and QA controls when new information becomes available through construction and operating experience, or from changes in plant design.

The applicant should also commit to update the QA program to reflect any changes between the construction approval and the license application to possess and use SNM.

In either case, the requirements of 10 CFR Part 21 should be addressed by the applicant.

Exceptions or alternatives to the QA acceptance criteria and positions contained in this review plan section may be adopted by the applicant or licensee provided adequate justification is given.

15.1.5 REVIEW PROCEDURES

15.1.5.1 Acceptance Review

The primary reviewer should perform an acceptance review to determine if the application adequately addresses the items in Section 15.1.3, "Areas of Review," for either the construction approval review or the review for a license to possess and use SNM.

Guidance specific to the construction approval review and the review for a license to possess and use SNM is provided below.

E. Construction Approval

Specifically, the application for construction approval should address Section 15.1.3 in full and should identify whether Option A or Option B of Section 15.1.4.3 has been chosen.

F. License To Possess and Use SNM

The areas of review for the updated material in the license application should include items A through S identified in Section 15.1.3., with special attention on the identification of any new or changed aspects of the QA program.

Note that the applicant's commitment to implement and maintain its QA in conformance with the applicable basic and supplemental "requirements" of Parts I and II of ASME–NQA–1–1994 or equivalent should satisfy the acceptance review criteria in item A or B of this section.

If the primary reviewer verifies that QA is adequately addressed in either the construction approval review or the review for a license to possess and use SNM, the primary reviewer should accept the application for the safety evaluation in Section 15.1.5.2. If the primary reviewer identifies significant deficiencies in the material provided, the primary reviewer should request that the applicant submit additional information prior to the start of the safety evaluation.

15.1.5.2 Safety Evaluation

After determining that the application is acceptable for review in accordance with either Section 15.1.5.1(A) (construction approval) or 15.1.5.1(B) (license to possess and use SNM), the primary reviewer should perform a safety evaluation against the acceptance criteria described in Section 15.1.4. On the basis of its review, the staff may request that the applicant provide additional information or modify the application to meet those acceptance criteria.

Guidance specific to the construction approval review and the review for a license to possess and use SNM is provided below.

A. Construction Approval

The primary reviewer should review material submitted for the construction approval review to determine whether the applicant has met either Option A or Option B as defined in Section 15.1.4.3.

In either case, the applicant should also (a) describe how the QA will be graded for items of lesser or no effect on consequences of concern (unless the applicant chooses to apply the highest level of QA and quality control to all principal SSCs) and (b) list the principal SSCs as determined in the safety assessment of the design basis. The primary reviewer should determine whether the applicant and its principal contractors have adequately planned for QA to be accomplished. Some of the information may be referenced to other sections of the application, or incorporated by reference, provided these references are clear and specific.

The secondary reviewer should confirm that the applicant's and the applicant's principal contractors' QA commitments are consistent with other sections of the application.

The other supporting reviewers should determine, within their areas of review, whether principal SSCs have been specified with the appropriate level of QA.

The review should result in a determination that there is reasonable assurance that the applicant's and the applicant's principal contractors' QA programs will provide reasonable assurance against natural phenomena and the consequences of potential accidents through the QA program's application to the design, fabrication, construction, testing and operation of the applicant's SSCs.

B. License To Possess and Use SNM

When the applicant updates the QA program for the license application, new or changed material should include any IROFS identified since the NRC approved construction of the principal SSCs. The primary reviewer should focus the review on any new or changed material and determine whether the necessary QA policies, procedures, and instructions will be in place and applied to IROFS before personnel begin activities relied on for safety. The

primary reviewer should also confirm that the material presented remains consistent with the material provided in the license application in support of other chapters of this SRP.

The supporting reviewer (Fuel Cycle Facility Inspector) should become familiar with the applicant's and principal contractors' QA commitments and determine whether ongoing activities are in agreement with them.

The review should result in a determination that there is reasonable assurance that the applicant's and the applicant's principal contractors' QA programs will provide reasonable assurance that IROFS will be available and reliable to perform their safety functions in a satisfactory manner when needed.

When the safety evaluation is complete, the primary reviewer, with assistance from the other reviewers, should prepare the QA input for the Safety Evaluation Report (SER) as described in Section 15.1.6 using the acceptance criteria from Section 15.1.4. The secondary reviewer should coordinate the QA input with the balance of the reviews and the SER.

15.1.6 EVALUATION FINDINGS

The primary reviewer should document the safety evaluation by preparing material suitable for inclusion in the SER. The primary reviewer should describe the review, explain the basis for the findings, and state the conclusions.

The staff could document a safety evaluation for the application for construction approval review as follows:

> *The staff reviewed the quality assurance (QA) program for construction approval for [insert facility name] according to Chapter 15.1 of NUREG–1718. [Here the primary reviewer provides a summary statement of what was evaluated and why the reviewer finds the application acceptable.] Based on its review of the application, the NRC staff concluded that the applicant has adequately described its QA program and the applicant's QA program meets the regulatory requirements of 10 CFR Part 70, as applied to structures, systems, and components, will provide reasonable assurance of protection against natural phenomena and the consequences of potential accidents.*

The staff could document a safety evaluation for the review for a license to possess and use SNM as follows:

> *The staff reviewed the quality assurance (QA) program for a license for [insert facility name] to possess and use special nuclear material according to Chapter 15.1 of NUREG-1718. [Here the primary reviewer provides a summary statement of what was evaluated and why the reviewer finds the application acceptable.] Based on its review of the license application, focusing on new or updated material when compared to the safety evaluation for the construction approval review, the NRC staff concludes that (A) the applicant has adequately described its updated QA program and (B) the applicant's updated QA program*

meets the regulatory requirements of 10 CFR Part 70 and thus provides reasonable assurance that all items relied on for safety will be available and reliable to perform their designated safety functions when needed.

15.1.7 REFERENCES

American Society of Mechanical Engineers (ASME). ASME–NQA–1–1994, as revisied by the ASME NQA-1a-1995 Addenda, "Quality Assurance Requirements for Nuclear Facility Applications." ASME: New York, NY.1994/1995.

Code of Federal Regulations, *Title 10, Energy,* Part 21, "Reporting of Defects and Noncompliances."

Code of Federal Regulations, *Title 10, Energy,* Part 70, "Domestic Licensing of Special Nuclear Material."

Nuclear Regulatory Commission (U.S.), Washington, D.C. "Domestic Licensing of Special Nuclear Material (10 CFR Part 70)," *Federal Register:* Vol. 64, No. 146. pp. 41338-41357. July 30, 1999.

Nuclear Regulatory Commission (U.S.) (NRC). Regulatory Guide 1.28, Revision 3, "Quality Assurance Program Requirements (Design and Construction)," NRC: Washington, D.C. August 1985.

15.0 MANAGEMENT MEASURES
15.2 CONFIGURATION MANAGEMENT

15.2.1 PURPOSE OF REVIEW

The purpose of this review is to establish with reasonable assurance that the applicant has a plan for or has implemented an acceptable configuration management (CM) system. The review should result in a determination that the applicant has described and committed to a CM system during design and construction (as described in the portion of the license application submitted for construction approval) and operations (as updated and described in the application for a license to possess and use special nuclear material [SNM]) that provides reasonable assurance that the applicant will maintain in a consistent and up-to-date manner design information, safety information, and modifications (both temporary and permanent for design and operations) information, that might affect the ability of the principal structures, systems, or components[1] (SSCs) or items relied on for safety (IROFS) to perform their function when needed. The review should also result in a determination that the applicant's CM system captures formal documentation governing the design and continued maintenance of the SSCs and IROFS and supporting management measures, as identified and described in the integrated safety analysis (ISA) programmatic commitments and ISA Summary (see Chapter 5.0). The review should ensure that the CM system is adequately coordinated and integrated with the other management measures, such as maintenance, quality assurance, training and qualifications, procedures, and audits and assessments.

15.2.2 RESPONSIBILITY FOR REVIEW

Primary: Project Manager

Secondary: Primary ISA Reviewer, Quality Assurance Reviewer, Records Management Reviewer, Organization and Administration Reviewer

Supporting: Fuel Cycle Facility Inspector

15.2.3 AREAS OF REVIEW

The applicant should submit a description of the CM system with the portion of the license application that it submits for construction approval and should submit updated information with the application for a license to possess and use SNM. The applicant's descriptions and commitments for CM should be reviewed with an emphasis on the processes for documenting an established baseline configuration and controlling changes to it to preclude inadvertent degradation of safety. An examination should be conducted of the descriptions of the organizational structure responsible for CM activities and the process, procedures, and documentation required by the applicant for modifying SSCs, principal SSCs, and IROFS and

[1] "Principal structures, systems, and components" are, by definition, items relied on for safety (see 10 CFR 70.4 or the glossary to this SRP).

the supporting management measures. The review should focus on the applicant's management level controls that ensure (a) the disciplined documentation of engineering, installation, and operation of modifications; (b) the training and qualification of affected staff; (c) revision and distribution of operating, test, calibration, surveillance, and maintenance procedures and drawings; (d) post-modification testing; and (e) operational readiness review.

The following topics should be reviewed:

A. CM Policy

The review should cover the applicant's description of overall CM systems, including at least the following topics: (a) the scope of the SSCs and IROFS to be included in the CM system, (b) objectives of each CM activity, (c) a description of each CM activity, and (d) the organizational structure and staffing interfaces.

The review should examine the applicant's establishment of a baseline CM policy applicable to all design and construction (construction approval review) and operations (review for a license to possess and use SNM). The review should also examine any reduced level of CM that the applicant may propose for certain principal SSCs or IROFS based on the safety assessment of the design bases or ISA results, respectively.

Specifically, the primary reviewer should review the CM plan that provides management commitments and policy directives and defines key responsibilities, terminology, and equipment scope. The method for initiating prompt corrective actions should be examined. The secondary reviewers should examine the safety assessment of the design bases (construction approval review) or the ISA Summary (review for a license to possess and use SNM) for the identification of dependence on CM of principal SSCs or IROFS. Appropriate interfaces both within the CM system and with other facility organizations and functions should be examined. In particular, the quality assurance (QA) reviewer should assist in examining the functional interfaces with QA, maintenance, and training (including qualification). The reviewers should look for the applicant's identification of required data bases and the rules for their maintenance. The reviewers should examine implementing procedures for the CM system.

B. Design Requirements

The review should cover the applicant's demonstration that design requirements and associated design bases have been established and are maintained by an appropriate organizational unit. The applicant's CM controls on the design requirements and the safety assessment of the design bases (construction approval review) or the ISA (review for a license to possess and use SNM) should be evaluated. The review should be coordinated with the primary reviewer of Chapter 5.0.

C. Document Control

The review should include the applicant's methods used to establish and control documents within the CM system.

D. Change Control

The review should examine the applicant's commitments to provide reasonable assurance that the CM system maintains strict consistency among the design requirements, the construction or physical configuration, and the facility documentation. An important component of this review is the applicant's process, within the CM system, for ensuring that the safety assessment of the design bases (construction approval review) or the ISA (review for a license to possess and use SNM) will be systematically reviewed and modified to reflect design or operational changes from an established safety basis, and that all other documents that are affected by safety basis changes will be properly modified, authoritatively approved, and made available to personnel.

E. Assessments

The review should examine the applicant's commitments to conduct initial and periodic assessments of the CM system to determine the system's effectiveness and to correct deficiencies, consistent with the acceptance criteria in SRP Section 15.6, "Audits and Assessments."

15.2.4 ACCEPTANCE CRITERIA

15.2.4.1 Regulatory Requirements

The staff's requirements applicable to CM are the following:

A. 10 CFR 70.62(d), relating to the requirement that the applicant or licensee is to establish management measures to provide continuing assurance of compliance with the performance requirements.

B. 10 CFR 70.64(a)(1), relating to the requirement that the design of new facilities or the design of new processes at existing facilities be developed and implemented in accordance with management measures.

C. 10 CFR 70.65(a), relating to the requirement that the application include a description of the management measures.

D. 10 CFR 70.72(a), relating to the requirement that the licensee establish a CM system.

15.2.4.2 Regulatory Guidance

None.

15.2.4.3 Regulatory Acceptance Criteria

The reviewers should determine that an applicant's CM system is acceptable if it satisfies the following criteria:

A. CM Policy

The applicant's description of its overall CM system describes at least the following topics: (a) the scope of the SSCs (construction approval review) or IROFS (review for a license to possess and use SNM) and supporting management measures to be included in the CM system (coordinate with the reviewer of Chapter 5.0), (b) a description of each CM system activity, (c) the objectives of each CM system activity, (d) any reduced level of CM that the applicant may propose for certain SSCs (construction approval review) or IROFS (review for a license to possess and use SNM) based on the safety assessment of the design bases or the ISA results, respectively, and (e) the organizational structure and staffing interfaces.

The scope of SSCs (construction approval review) or IROFS (review for a license to possess and use SNM) includes all those SSCs or IROFS as defined by the safety assessment of the design bases or the ISA, respectively; furthermore, those items are included in the QA, maintenance, and training and qualifications programs. The functional interfaces with QA, maintenance, and training and qualifications are of particular importance and should be addressed individually.

B. Design Requirements

The applicant demonstrates that design requirements and associated design bases have been established and are maintained by an appropriate organizational unit. The applicant demonstrates that the CM system provides for keeping design requirements and the safety assessment of the design bases (construction approval review) or the ISA (review for a license to possess and use SNM) current and that suitable hazard/accident analysis methods, including controlled computer codes, if applicable, are available to evaluate safety margins of proposed changes. Technical management review and approval procedures are described.

The design process leading to drawings and other statements of requirements proceeds logically from the design bases. Specific personnel are assigned the responsibility for maintaining the design bases and requirements. These may be the same personnel that maintain the safety assessment of the design bases (construction approval review) or the ISA (review for a license to possess and use SNM) and controlled computer codes. SSCs (construction approval review) or IROFS (review for a license to possess and use SNM) to be listed under CM are clearly defined in the requirements documents, along with the assignment of any grades or quality levels. The grades or quality levels, if specified, are

based on the qualitative risk associated with postulated accident sequences in which the SSCs (construction approval review) or IROFS (review for a license to possess and use SNM) are required to function. The applicant should have indicated in the safety assessment of the design bases (construction approval review) or the ISA (review for a license to possess and use SNM) the level of CM attributes that are applied to a particular item. However, in the safety assessment of the design bases or ISA, this indication may consist of only an index or category designation. The definition of the multiple CM levels, if used, should be in the CM chapter of the application.

C. Document Control

The applicant describes an acceptable method to establish and control documents within the CM system, including cataloging the document data base, the information content of the document data base, maintenance and distribution of documents, document retention policies, and document retrieval policies. A list of the types of documents controlled is established and includes key documents, such as drawings, procurement specifications, engineering analyses, operating procedures, training/qualification records, and maintenance procedures.

The applicant's material shows that the CM system will capture documents that are relevant and important to safety. This includes design requirements; the safety assessment of the design bases (application for construction) or the ISA (review for a license to possess and use SNM); as-built drawings; specifications; all safety-important operating procedures; procedures involving training, QA, maintenance, audits, and assessments; emergency operating procedures; emergency response plans; system modification documents; assessment reports; and others, as necessary, that the applicant may deem part of the CM system. A controlled document data base is used to control documents and track document change status. Rules of storage for originals or master copies of documents within the CM system should follow the guidance of "Records Management" discussed in SRP Section 15.8.

D. Change Control

The applicant demonstrates that the CM system will maintain strict consistency among the design requirements, the physical configuration, and the facility documentation. The applicant commits to an acceptable process for identifying and authorizing proposed changes; performing appropriate technical, management, and safety reviews of proposed changes in configurations of SSCs (construction approval review) or IROFS (review for a license to possess and use SNM); approving changes; tracking and implementing changes; and documenting changes (including placement of documentation in a document control center and dissemination to affected functions such as training, engineering, operations, maintenance, and QA). The applicant describes an acceptable process within the CM system for ensuring that the safety assessment of the design bases (construction approval review) or the ISA (review for a license to possess and use SNM) is systematically reviewed and modified to reflect design or operational changes from an established safety basis, and that all documents outside the safety assessment of the design bases (construction

approval review) or the ISA (review for a license to possess and use SNM) that are affected by safety basis changes are properly modified, authoritatively approved, and made available to personnel.

Post-modification testing of items (or procedure drills or walkthroughs) may be performed in conjunction with periodic item performance monitoring and normal maintenance functions.

E. Assessments

The applicant confirms that assessments, including initial and periodic examinations of the CM system, will be conducted to determine the system's effectiveness and to correct deficiencies. The applicant indicates that such assessments will be systematically planned and conducted in accordance with an overall facility audit and assessment program as described by the applicant and reviewed by the NRC in accordance with Section 15.6 of this SRP.

Both document assessments and physical assessments (system walkdowns) will be conducted periodically to check the adequacy of the CM system. All assessments and follow-ups are documented. These reports can provide a supporting basis for future changes. Assessments will include reviews of safety systems from design requirements through implementation.

The applicant should also commit to updating the CM system to reflect any changes between the construction approval review and application for a license.

15.2.5 REVIEW PROCEDURES

15.2.5.1 Acceptance Review

The primary reviewer should perform an acceptance review to determine if the application for construction approval or license application adequately addresses the items in Section 15.2.3, "Areas of Review."

Guidance specific to the construction approval review and the review for a license to possess and use SNM is provided below.

A. Construction Approval

The construction approval review should address each item in Section 15.2.3 with an emphasis on the CM for managing the design bases during design and construction. This should include a reviewer determination that the applicant committed to a formal CM system for establishing the design bases and reviewing proposed changes to SSCs.

B. License To Possess and Use SNM

The review for a license to possess and use SNM should address each item in Section 15.2.3 with an emphasis on the CM for operation (e.g., procedures, maintenance, and training) and any new or changed material in the CM program that will arise as a part of the transition from design and construction (design bases) to operations (integrated safety analysis). This should include a reviewer determination that the applicant committed to a formal CM system for establishing and managing the ISA and reviewing proposed changes to IROFS or items, procedures, and processes that may affect IROFS.

If the primary reviewer verifies that CM is adequately addressed in the construction approval review or the review for a license to possess and use SNM, the primary reviewer should accept the application for the safety evaluation in Section 15.2.5.2. If the primary reviewer identifies significant deficiencies in the material provided, the primary reviewer should request that the applicant submit additional information prior to the start of the safety evaluation.

15.2.5.2 Safety Evaluation

After determining that the application is acceptable for review in accordance with either Section 15.2.5.1(A) (construction approval review) or 15.2.5.1(B) (review for a license to possess and use SNM), the primary reviewer should perform a safety evaluation against the acceptance criteria described in Section 15.2.4. On the basis of its review, the staff may request that the applicant provide additional information or modify the application to meet those acceptance criteria.

Guidance specific to the construction approval review and the review for a license to possess and use SNM is provided below.

A. Construction Approval

The primary reviewer should determine whether the applicant has adequately planned for CM to be accomplished during design and construction and whether necessary policies, personnel, procedures, and instructions will be in place to begin CM early, that is, during the safety assessment of the design bases and the design and construction of the SSCs. The secondary reviewers should confirm that the applicant's CM commitments are consistent with other sections of the application.

B. License To Possess and Use SNM

When the applicant updates the CM system for the review for a license to possess and use SNM, the primary reviewer should focus the review on any new or changed material. Particularly, the primary reviewer should ensure that the applicant has adequately planned for CM to be accomplished during operations and whether necessary policies, personnel, procedures, and instructions will be in place to transition from CM during design and construction to CM during operations, that is, from the safety assessment of the design bases and the design and construction of the SSCs to the ISA and the IROFS.

The primary reviewer should also confirm that the material presented remains consistent with the material provided in the license application in support of other chapters of this SRP.

The supporting reviewer (Fuel Cycle Facility Inspector) should become familiar with the applicant's CM commitments and determine whether ongoing activities are in agreement with them.

The review for a license to possess and use SNM should result in a determination that there is reasonable assurance that the CM system will provide additional assurance that IROFS will perform satisfactorily in service and that activities relied on for safety will be performed satisfactorily.

When the safety evaluation is complete, the primary staff reviewer, with assistance from the other reviewers, should prepare the CM input for the safety evaluation report (SER) as described in Section 15.2.6 using the acceptance criteria from Section 15.2.4.

15.2.6 EVALUATION FINDINGS

The primary reviewer should document the safety evaluation by preparing material suitable for inclusion in the SER. The primary reviewer should describe the review, explain the basis for the findings, and state the conclusions.

The staff could document a safety evaluation for the construction approval review as follows:

The staff reviewed the configuration management (CM) system for (name of facility) according to Section 15.2 of NUREG–1718. [Insert a summary statement of what was evaluated and why the reviewer finds the submittal acceptable.]

Based on its review of the material submitted for construction approval, the NRC staff concluded that the applicant suitably and acceptably described its commitment to a proposed CM system, including the method for managing changes in procedures, facilities, activities, and equipment for SSCs identified in the safety assessment for the design bases. Management-level policies and procedures, including an analysis and independent safety review of any proposed activity involving SSCs, are described that will ensure that the relationship between design requirements, construction, and facility documentation is maintained as part of a new design or change in an existing design. The administrative control will ensure that the organizational structure, procedures, and responsibilities necessary to implement CM are in place or committed to; that the design requirements and bases are documented and supported by analyses and the documentation is maintained current; that documents, including drawings, are appropriately stored and accessible; that drawings and related documents adequately describe SSCs; that procedures adequately describe how the applicant will achieve and maintain strict consistency among the design requirements, facility construction, and facility documentation; and that methods are in place for suitable analysis, review, approval, and implementation of identified changes to SSCs.

In situations where the applicant proposes a graded CM system based on risk significance, the following can be added:

> *The applicant described its approach to applying at least two levels of CM attributes to SSCs and identified which SSCs involve lower risk and may receive the reduced level of CM requirements. The applicant's proposed reduced CM features are found adequate to contribute to the reliability and availability of the lesser risk items relied on for safety identified in the application.*

The staff could document a safety evaluation for the review for a license to possess and use SNM using paragraphs that are similar to those used for the construction approval but that encompass the new or updated material when compared to the safety evaluation for the construction approval and address CM as applied to IROFS during operations, including controls to assure configuration verification, correct functional tests, accurate documentation for equipment and procedures, adequate methods or plans for initial and periodic examination of the CM system's effectiveness, and thorough assessments and follow-up reports of corrective actions.

15.2.7 REFERENCES

Code of Federal Regulations, *Title 10, Energy,* Part 70, "Domestic Licensing of Special Nuclear Material."

Department of Energy (U.S.) (DOE). DOE–STD–1073–93–Pt.1 and –Pt.2, "DOE Standard Guide for Operational Configuration Management Program." DOE: Washington, D.C. 1993.

Nuclear Regulatory Commission (U.S.), Washington, D.C. "Domestic Licensing of Special Nuclear Material (10 CFR Part 70)." *Federal Register:* Vol. 64, No.146. pp. 41338–41357. July 30, 1999.

15.0 MANAGEMENT MEASURES
15.3 MAINTENANCE

15.3.1 PURPOSE OF REVIEW

The purpose of this review is to establish reasonable assurance that the facility will have an adequate maintenance program for items relied on for safety (IROFS)—with the exception of personnel activities—to ensure their availability and reliability to perform their intended safety functions when needed. The maintenance performed to meet the availability and reliability requirements for the IROFS should be commensurate with risk levels identified in the integrated safety analysis (ISA) Summary.

15.3.2 RESPONSIBILITY FOR REVIEW

Primary: Project Manager

Secondary: Quality Assurance, Criticality, Chemical, Fire, Radiation Protection, and Environmental Reviewers

Supporting: Fuel Cycle Facility Inspector

15.3.3 AREAS OF REVIEW

The applicant's description of its maintenance program should be reviewed during the license application with emphasis on demonstrating that IROFS with the exception of personnel activities (safety controls) are inspected, calibrated, tested, and maintained so as to ensure their ability to perform their safety functions when needed. The safety controls should be identified by the ISA Summary (discussed in Chapter 5.0 of this SRP). Individual components and support systems for the safety controls may have to be individually maintained to ensure the availability and reliability of the control function. The reviewers should review the applicant's description of how each of the following essential components is implemented within the site organization:

A. Surveillance/monitoring;
B. Corrective maintenance;
C. Preventive maintenance; and
D. Functional testing.

15.3.4 ACCEPTANCE CRITERIA

15.3.4.1 Regulatory Requirements

The requirement for maintenance is addressed in the following:

Nuclear Regulatory Commission (U.S.), Washington, D.C. "Domestic Licensing of Special Nuclear Material (10 CFR Part 70)." *Federal Register:* Vol. 64, No. 146. pp. 41338–41357. July 30, 1999.

Specific references are as follows:

A. In § 70.4, "Definitions," the term "management measures" is defined. Maintenance is included as a management measure.

B. In § 70.62(d), the applicant is required to establish management measures to provide continuing assurance of compliance with the performance requirements.

C. In § 70.64(a)(1), the design of new facilities or new processes at existing facilities is required to be developed and implemented in accordance with management measures.

D. In § 70.64(a)(8), inspection, testing, and maintenance are required to be addressed as one of the Baseline Design Criteria to provide reasonable assurance that IROFS will be designed to allow them to be adequately inspected, tested, and maintained to ensure their availability and reliability to perform their function when needed.

E. In § 70.65(a), the application is required to include a description of the management measures.

15.3.4.2 Regulatory Guidance

None.

15.3.4.3 Regulatory Acceptance Criteria

For the construction approval, the applicant should commit to establishing a maintenance program that meets or exceeds the acceptance criteria in Section 15.3.4.

The applicant's maintenance program should be considered acceptable (application for the license to possess and use special nuclear material [SNM]) if it adequately addresses the following:

A. Safety Controls Identified in the ISA

An assessment of whether components and support systems need to be individually maintained to ensure the availability and reliability of specific safety controls. The reliability

and availability of a particular item should be commensurate with the risk levels identified in the ISA.

B. Essential Components

i. Surveillance/monitoring: The surveillance/monitoring function, its responsible organization, and the conduct of surveillance/monitoring at specified frequencies to measure the degree to which safety functions or safety controls meet performance specifications. This activity is used in setting preventive maintenance frequencies for safety controls and the determination of performance trends for safety controls. How results from incident investigations (described in Section 15.7 of this SRP) and identified root causes are used to modify the affected maintenance function and eliminate or minimize the root cause from recurring should be addressed. For surveillance tests that can be done only while equipment is out of service, proper compensatory measures should be prescribed.

ii. Corrective maintenance: The documented approach used to perform corrective actions or repairs on safety controls. The maintenance function should provide a planned, systematic, integrated, and controlled approach for the repair and replacement activities associated with identified failures of safety controls.

iii. Preventive maintenance: A description of the preventive maintenance function that contains a commitment to conduct preplanned and scheduled periodic refurbishing or partial or complete overhaul for the purpose of providing reasonable assurance that the reliability and availability goals for the IROFS will continue to be met even with unplanned outages. This activity includes using the results of the surveillance/monitoring component of maintenance. Instrumentation calibration and testing should be addressed as part of this component.

iv. Functional testing: A description of the functional testing function that contains a commitment to the functional testing, as warranted, of safety controls after corrective or preventive maintenance or calibration. Functional testing should be conducted using approved procedures that include compensatory measures while the test is being conducted.

C. Work Control Methods

A list of maintenance-related work control methods.

D. Relationship of the Maintenance Elements to Other Management Control Sections Discussed in SRP Chapter 15.0

A discussion of how the maintenance function uses, interfaces with, or is linked to these elements.

15.3.5 REVIEW PROCEDURES

15.3.5.1 Acceptance Review

The primary reviewer should perform an acceptance review to determine if the application adequately addresses the items in Section 15.3.3, "Areas of Review," for either the construction approval review or the review for a license to possess and use SNM. If the primary reviewer verifies that maintenance is adequately addressed for the appropriate review, the primary reviewer should accept the application for the safety evaluation in Section 15.3.5.2. If the primary reviewer identifies significant deficiencies in the material provided, the primary reviewer should request that the applicant submit additional information prior to the start of the safety evaluation.

15.3.5.2 Safety Evaluation

For the construction approval review, the reviewer should determine that the applicant has committed to a maintenance program that will meet or exceed the acceptance criteria in Section 15.3.4.

For the review for a license to possess and use SNM, and after determining that the application is acceptable for review in accordance with Section 15.3.5.1, the primary reviewer should perform a safety evaluation against the acceptance criteria described in Section 15.3.4. On the basis of its review, the staff may request that the applicant provide additional information or modify the application to meet those acceptance criteria.

The primary reviewer should establish that the applicant's maintenance program meets or exceeds the acceptance criteria. The primary reviewer should determine if the applicant has adequately planned the work to be accomplished and whether necessary policies, procedures, and instructions either are in place or will be in place before work starts. The primary reviewer should also determine that there is reasonable assurance that the applicant's quality assurance, configuration management, and maintenance programs, as described in SRP Sections 15.1 through 15.3, are coordinated.

When an applicant's maintenance program references other sections of the application, the primary reviewer should confirm that these sections of the application are consistent with the applicant's selection of acceptance criteria and the proposed method for implementation.

The primary reviewer should coordinate with secondary staff reviewers to ensure there is no contradiction between maintenance and other areas of the application. The secondary staff reviewers should ensure that the scope of the applicant's maintenance program includes the IROFS that are in their primary review areas of the application. The supporting staff reviewer (Fuel Cycle Facility Inspector) should become familiar with the applicant's maintenance program and determine whether ongoing activities are in agreement with it.

15.3.6 EVALUATION FINDINGS

The primary reviewer should document the safety evaluation by preparing material suitable for inclusion in the Safety Evaluation Report (SER). The primary reviewer should describe the review, explain the basis for the findings, and state the conclusions.

The staff could document the safety evaluation for the construction approval review by stating that the applicant has committed to establishing a maintenance program that meets or exceeds the acceptance criteria contained in Section 15.3.4 of NUREG–1718.

The staff could document the safety evaluation for the review for a license to possess and use SNM as follows:

> *The staff reviewed the license application for [insert facility name] according to Section 15.3 of NUREG–1718. Based on the review of the license application, the staff concluded that the applicant committed to maintenance of items relied on for safety with the exception of personnel activities (safety controls). [Insert a summary statement of what was evaluated and why the reviewer finds the submittal acceptable.] The applicant's maintenance commitments contain the basic elements to ensure availability and reliability: surveillance/monitoring, corrective maintenance, preventive maintenance, and functional testing. The applicant's maintenance function is proactive, using surveillance/monitoring and maintenance records to analyze equipment performance and identify the root causes of repetitive failures.*
>
> *In addition, the surveillance/monitoring activities described in this section of the application provide assurance of the validity of the ISA by examination and calibration and testing of equipment that monitors process safety parameters and acts to prevent or mitigate accident consequences.*
>
> *The maintenance function: (1) is based on approved procedures; (2) employs work control methods that properly consider personnel safety, awareness of facility operating groups, quality assurance, and the rules of configuration management; (3) links items relied on for safety requiring maintenance to the ISA; (4) justifies the preventive maintenance intervals in the terms of equipment reliability goals; (5) provides for training that emphasizes importance of ISA identified controls, regulations, codes, and personal safety; and (6) creates documentation that includes detailed records of all surveillances, inspections, equipment failures, repairs, and replacements.*
>
> *The staff concludes that the applicant's maintenance function meets the requirements of 10 CFR Part 70 and provides reasonable assurance that the environment and the health and safety of the public are protected.*

15.3.7 REFERENCES

Code of Federal Regulations, *Title 10, Energy,* Part 70, "Domestic Licensing of Special Nuclear Material."

———. *Title 10, Energy*, Section 50.65, "Requirements for Monitoring the Effectiveness of Maintenance at Nuclear Power Plants."

———. *Title 29, Labor,* Section 1910.119, "Process Safety Management of Highly Hazardous Chemicals."

———. *Title 40, Protection of Environment*, Part 68, "Risk Management Program for Chemical Accidental Release Prevention."

Nuclear Regulatory Commission (U.S.), Washington, D.C. "Guidance on Management Controls/Quality Assurance, Requirements for Operation, Chemical Safety, and Fire Protection for Fuel Cycle Facilities." *Federal Register:* Vol. 54, No. 53. pp. 11590–11598. March 21, 1989.

———. "Domestic Licensing of Special Nuclear Material (10 CFR Part 70)," *Federal Register:* Vol. 64, No. 146. pp. 41338-41357. July 30, 1999.

Nuclear Regulatory Commission (U.S.) (NRC). Inspection Manual, Procedure 88025, "Maintenance and Surveillance Testing." NRC: Washington, D.C. May 23, 1984.

———. Inspection Manual, Procedure 88062, "Maintenance and Inspection." NRC: Washington, D.C. January 1996.

———. Regulatory Guide 1.160, Rev. 2, "Monitoring the Effectiveness of Maintenance at Nuclear Power Plants." NRC: Washington, D.C. March 1997.

15.0 MANAGEMENT MEASURES
15.4 TRAINING AND QUALIFICATION OF PLANT PERSONNEL

15.4.1 PURPOSE OF REVIEW

The purpose of this review is to establish that there is reasonable assurance that personnel who perform activities relied on for safety at the plant[1] will understand, recognize the importance of, and be qualified to perform these activities as required by 10 CFR Part 70 in a manner that adequately protects the public and worker health and safety and the environment.

15.4.2 RESPONSIBILITY FOR REVIEW

Primary: Training, Quality Assurance, or Human Factors Engineer/Specialist

Secondary: Licensing Project Manager

Supporting: Fuel Cycle Facility Inspector

15.4.3 AREAS OF REVIEW

Personnel who perform activities relied on for safety are required by 10 CFR Part 70 to be trained and qualified as necessary. The applicant should train, test, and qualify personnel to provide adequate assurance that they understand, recognize the importance of, and are qualified to perform these activities in a manner that adequately protects the public and worker health and safety and the environment. The training and qualification should be commensurate with the assigned functional responsibility, authority, and activities relied on for safety of the respective personnel. The application of training and qualification may be graded and should be adequate to fulfill the objectives as identified by the licensee, especially when human factors are relied on for safety (see Chapter 12.0 of this SRP). Personnel at the facility should have the knowledge and skills necessary to start-up, operate, maintain, modify, and decommission the facility in a safe manner. The applicant should address the training and qualification of plant personnel for the construction approval review and should submit updated information for the application for a license to possess and use special nuclear material (SNM).

The training, testing, and qualification of these personnel as described for the construction approval should be reviewed. This should include the training, testing, retesting, and qualification of managers, supervisors, designers, technical staff, construction personnel, plant operators, technicians, maintenance personnel, and other personnel whose level of knowledge is relied on for safety.

---

[1] This SRP section provides guidance for the review of information on the training and qualification of plant personnel who perform activities relied on for safety. Section G2 of SRP Appendix G on quality assurance and Supplement 2S–4 of ASME–NQA–1–1994 provide review guidance on the subject of training and qualification of other personnel (for example, construction personnel) who perform activities relied on for safety.

The following areas should be reviewed:

A. Organization and management of training;
B. Analysis and identification of functional areas requiring training;
C. Position training requirements;
D. Development of the basis for training, including objectives;
E. Organization of instruction using lesson plans and other training guides;
F. Evaluation of trainee learning;
G. Conduct of on-the-job training;
H. Evaluation of training effectiveness;
I. Personnel qualification; and
J. Applicant's provisions for continuing assurance, including the needs for retraining or reevaluation of qualification.

15.4.4 ACCEPTANCE CRITERIA

15.4.4.1 Regulatory Requirements

The requirement for training and qualification is addressed in the following:

Nuclear Regulatory Commission (U.S.), Washington, D.C. "Domestic Licensing of Special Nuclear Material (10 CFR Part 70)." *Federal Register*: Vol. 64, No. 146. pp. 41338-41357. July 30, 1999.

Specific references are as follows:

A. In § 70.4, "Definitions," the term "management measures" is defined. Training and qualification are included as management measures.

B. In § 70.62(d), the applicant is required to establish management measures to provide continuing assurance of compliance with the performance requirements.

C. In § 70.64(a)(1), the design of new facilities or new processes at existing facilities is required to be developed and implemented in accordance with management measures.

D. In § 70.65(a), the application is required to include a description of the management measures.

An additional requirement for training and qualification is addressed in the following:

Code of Federal Regulations, *Title 10, Energy,* Part 19, "Notices, Instructions and Reports to Workers: Inspection and Investigations." (The specific reference is to § 9.12, "Instructions to Workers.")

15.4.4.2 Regulatory Guidance

NRC guidance applicable to training and qualification of personnel that provide guidance for implementing and satisfying the regulatory requirements and acceptance criteria is:

Nuclear Regulatory Commission (U.S.) (NRC). NUREG-1220, Rev.1, "Training Review Criteria and Procedures." NRC: Washington, D.C. January 1993.

15.4.4.3 Regulatory Acceptance Criteria

For the construction approval, the applicant should commit to meet or exceed the acceptance criteria in Section 15.4.4 and to update the training and qualification of plant personnel descriptions to reflect any changes between the construction approval review and the review for a license to possess and use special nuclear material (SNM).

The NRC reviewers should find that the applicant's submittal regarding training and qualification of plant personnel provides reasonable assurance that the regulatory acceptance criteria below are adequately addressed and satisfied.

In addition to the regulatory acceptance criteria given below, SRP Sections 9.2.4.4 and 9.2.4.6 provide criteria for training and qualification of plant personnel for radiation safety functions.

A. Organization and Management of Training

The organization and management of training of plant personnel should be acceptable if the training functions are organized, staffed, and managed to facilitate planning, directing, evaluating, and controlling a training process that fulfills the objectives for the training as identified by the licensee, especially where human factors are relied on for safety for start-up, operation, maintenance, and modification of the facility. The training and qualification should be commensurate with the assigned functional responsibility, authority, and activities relied on for safety of the respective personnel. The application of training and qualification may be graded and should be adequate to fulfill the objectives as identified by the licensee, especially when human factors are relied on for safety. Formal training should be provided for each position or activity for which the required performance is relied on for safety. The application should state what training will be conducted and which personnel will be provided this training. Training should include retraining of previously trained and qualified personnel based on specified criteria.

The following commitments should be in the application regarding organization and management of training.

i. Line management should be responsible for the content and effective conduct of the training.

ii. The job function, responsibility, authority, and accountability of personnel involved in managing, supervising, and implementing training should be clearly defined.

iii. Performance-based training should be used as the primary management tool for analyzing, designing, developing, conducting, and evaluating training.

iv. Training procedures should be documented and implemented to provide reasonable assurance that all phases of training are conducted reliably and consistently.

v. Training documents should be linked to the configuration management system to provide reasonable assurance that design changes and plant modifications are accounted for in the training.

vi. Exceptions from training may be granted to trainees and incumbents when justified, documented, and approved by management.

vii. Auditable training records should be maintained. Training records, both programmatic and individual, should support management information needs and provide required data on each individual's training, job performance, and qualifications. (Refer to Section 15.8 and Appendix I for detailed guidance on records management.)

B. Analysis and Identification of Functional Areas Requiring Training

Analysis and identification of areas requiring training should be acceptable if the areas required for competent and safe job performance are identified, documented, and addressed by the training.

Operations personnel, training staff, and other subject matter experts, as appropriate, should have conducted or should conduct a needs/job analysis to develop a valid task list for specific jobs. The jobs treated in this manner should include, as a minimum, those responsible for managing, supervising, performing, and verifying the activities relied on for safety and those specified in the Integrated Safety Analysis Summary (ISA; see SRP Chapter 5.0) that prevent or mitigate accidents. Each task selected for training (initial or continuing) from the facility-specific task list should be matrixed to supporting procedures and training materials. The facility-specific list of tasks selected for training and the comparison to training materials should be reviewed on an established schedule and updated as necessitated by changes in procedures, facility systems/equipment, or job scope.

C. Position Training Requirements

Position training requirements are acceptable if minimum requirements for positions are specified for candidates whose activities are relied on for safety or who perform actions that prevent/mitigate accident sequences described in the ISA Summary. Trainees should meet entry-level criteria defined for the position, including minimum educational, technical, experience, and physical fitness (if necessary) requirements.

D. Development of the Basis for Training, Including Objectives

The development of the basis for training, including the objectives, is acceptable if the basis identifies training content, defines satisfactory trainee performance, and identifies objectives from the analysis of activities and performance requirements. Objectives should state the knowledge, skills, and abilities the trainee should demonstrate; the conditions under which required actions will take place; and the standards of performance the trainee should achieve on completion of the training activity.

E. Organization of Instruction Using Lesson Plans and Other Training Guides

The organization of instruction using lesson plans and other training guides should be acceptable if the plans/guides are based on the required learning objectives derived from specific job performance requirements and the needs/job analysis. Plans/guides should be used for in-class training and on-the-job training and should include standards for evaluating proper trainee performance. Review and approval requirements should be established for all plans/guides and other training materials before their issue and use.

F. Evaluation of Trainee Learning

The evaluation of trainee accomplishment of learning should be acceptable if trainees are evaluated during training, when appropriate, to determine their progress toward mastery of job performance requirements and at the completion of training to determine their mastery of job performance requirements.

G. Conduct of On-the-Job Training

The conduct of on-the-job training should be acceptable if on-the-job training used for activities identified in the ISA Summary is fully described. On-the-job training should be conducted using well-organized and current performance-based training materials. On-the-job training should be conducted by designated personnel who are competent in the program standards and methods of conducting the training. Completion of on-the-job training should be by actual task performance. When the actual task cannot be performed by the trainee and is therefore "walked-down," the conditions of task performance, references, tools, and equipment should reflect the actual task to the extent possible.

H. Systematic Evaluation of Training Effectiveness

An evaluation of training effectiveness and its relation to on-the-job performance should be acceptable if it provides reasonable assurance that the training program conveys the required skills and knowledge and is used to revise the training, where necessary, based on the performance of trained personnel in the job setting. A comprehensive evaluation of individual training programs should be conducted periodically by qualified individuals to identify program strengths and weaknesses. Feedback from trainee performance during training and from former trainees and their supervisors should be used to evaluate and refine the training. Change actions (for example, procedure changes, equipment changes, and facility modifications) should be monitored and evaluated for their impact on the

modification to a system, an appropriate review of all applicable written plant procedures will take place.

I. The applicant should indicate how technical accuracy of plant procedures will be ensured as written. The discussion should identify who is responsible for verification.

J. The applicant should indicate how documents will be distributed in accordance with current distribution lists. A process limiting the use of outdated plant procedures should be addressed.

K. The applicant should describe how formal requirements governing temporary changes to plant procedures will be developed and implemented.

L. Formal requirements for design control of items relied on for safety should be provided and should identify who is responsible for design inputs, processes, outputs, changes, interfaces, and records.

M. A description of the test control program should be provided and should indicate that an effective program has been established for tests, including commissioning and preoperational tests. Acceptable plant procedures for test control should provide criteria for determining when a test is required or how and when testing activities are performed.

   i. Tests should be performed under conditions that simulate the most adverse design conditions, as determined by analysis.

   ii. Test results should be documented and evaluated, and their acceptability should be determined by a responsible individual or group.

N. Plant procedures for maintenance involving safety controls should commit to the topics listed below for corrective and preventive maintenance, functional testing after maintenance, and surveillance/monitoring of maintenance activities:

   i. Premaintenance activity involving reviews of the work to be performed, including appropriate reviews of facility procedures for maintenance for accuracy and completeness.

   ii. Steps that require notification of all affected parties (operators and supervisors) prior to performing work and upon completion of maintenance work.

   iii. Control of work by comprehensive facility procedures to be followed by maintenance technicians.

O. The applicant should commit to conducting periodic reviews of plant procedures to ensure their continued accuracy and usefulness. The applicant should establish the time frame for these reviews. At minimum, all procedures should be reviewed every 5 years. Emergency procedures should be reviewed every year initially and, if experience warrants,

15.4.5 REVIEW PROCEDURES

15.4.5.1 Acceptance Review

The primary reviewer should perform an acceptance review to determine if the application adequately addresses the items in Section 15.4.3, "Areas of Review," for either the construction approval review or the review for a license to possess and use SNM.

Guidance specific to the construction approval review and the review for a license to possess and use SNM is provided below.

A. Construction Approval

Specifically, the safety assessment of the design basis should address Section 15.4.3 consistent with the level of design. Where information is under development or not yet available, the applicant may include a commitment to provide the material with the license application in lieu of the actual material. The primary reviewer should also verify that the applicant has committed to meeting or exceeding the acceptance criteria of Section 15.4.4.

B. License To Possess and Use SNM

Specifically, the license application should address Section 15.4.3 in full. The applicant is expected to have developed a program for the training and qualification of plant personnel prior to facility licensing for operations.

If the primary reviewer verifies that the training and qualification of plant personnel is adequately addressed, the primary reviewer should accept the application for the safety evaluation in Section 15.4.5.2. If the primary reviewer identifies significant deficiencies in the material provided, the primary reviewer should request that the applicant submit additional information prior to the start of the safety evaluation.

15.4.5.2 Safety Evaluation

After determining that the application is acceptable for review in accordance with Section 15.4.5.1(A) (construction approval) or 15.4.5.1(B) (license to possess and use SNM), the primary reviewer should perform a safety evaluation against the acceptance criteria described in Section 15.4.4. On the basis of its review, the staff may request that the applicant provide additional information or modify the application to meet those acceptance criteria.

Guidance specific to the construction approval review and the review for a license to possess and use SNM is provided below.

A. Construction Approval

Management Measures

The primary reviewer should verify that the applicant's commitments and goals as they relate to the training and qualification of plant personnel are adequate to meet or exceed the acceptance criteria in Section 15.4.3.

B. License To Possess and Use SNM

The primary reviewer should focus the review on any new or changed material covering the training and qualification of plant personnel that the applicant updated with the license application. The primary reviewer should also confirm that the material remains consistent with the material provided in the license application in support of other chapters of this SRP.

The primary reviewer should recognize that the training objectives and methods and the required qualification of plant personnel may be graded to correspond to the hazard potential of the facility, the items relied on for safety (IROFS), and the complexity of the training needed. The review should evaluate the adequacy of training and qualification on the basis of how well it fulfills the objectives for the training as identified by the applicant, especially when human factors are relied on for safety. The primary reviewer should determine whether the applicant has adequately planned for the training and qualification of plant personnel to be accomplished and whether necessary policies, procedures, and instructions will be in place and appropriate training and qualification will be accomplished before these personnel begin activities relied on for safety. Some of the information may be referenced to other sections of the application, or incorporated by reference, provided that these references are clear and specific.

The secondary reviewer should confirm that the applicant's commitments regarding the training and qualification of plant personnel are consistent with other sections of the applicant's submittal.

The supporting reviewer (Fuel Cycle Facility Inspector) should become familiar with the applicant's commitments for the training and qualification of plant personnel and determine whether ongoing activities are in agreement with them.

The review should result in a determination that there is reasonable assurance that the applicant's training and qualification of plant personnel will ensure that only properly trained and qualified personnel will perform activities relied on for safety.

15.4.6 EVALUATION FINDINGS

The primary reviewer should document the safety evaluation by preparing material suitable for inclusion in the Safety Evaluation Report (SER). The primary reviewer should describe the review, explain the basis for the findings, and state the conclusions.

The staff could document a safety evaluation for the application for the construction approval review as follows:

The staff reviewed the application for [insert facility name] according to Section 15.4 of NUREG–1718. [Here the primary reviewer provides a summary statement of what was evaluated (including the applicant's commitments) and why the reviewer finds the applicant's submittal acceptable.] Based on its review of the application, the NRC staff concludes that the applicant adequately described its training and qualification of plant personnel (or made commitments to meet the acceptance criteria of Section 15.4.4 of NUREG–1718) and that the applicant's training and qualification of plant personnel will, based on commitments, meet the requirements of 10 CFR Part 70 and provide reasonable assurance of protection of public health and safety and of the environment.

The staff could document a safety evaluation for the license application using a similar paragraph as that used for the construction approval, but encompassing any new or updated material (and possible fulfilled commitments) when compared with the safety evaluation for the construction approval review.

15.4.7 REFERENCES

American Society of Mechanical Engineers (ASME). ASME–NQA–1–1994, "Quality Assurance Requirements for Nuclear Facility Applications." ASME: New York, New York. 1994.

Code of Federal Regulations, *Title 10, Energy,* Part 70, "Domestic Licensing of Special Nuclear Material."

———. *Title 10, Energy,* Part 19, "Notices, Instructions and Reports to Workers: Inspection and Investigations."

Nuclear Regulatory Commission (U.S.), Washington, D.C. "Domestic Licensing of Special Nuclear Material, (10 CFR Part 70)." *Federal Register:* Vol. 64, No. 146. pp. 41338-41357. July 30, 1999.

Nuclear Regulatory Commission (U.S.) (NRC). NUREG-1220, Rev. 1, "Training Review Criteria and Procedures." NRC: Washington, D.C. January 1993.

15.0 MANAGEMENT MEASURES
15.5 PLANT PROCEDURES

15.5.1 PURPOSE OF REVIEW

The purpose of this review is to establish that there is reasonable assurance that the applicant is capable of and committed to providing management control of facility operations identified as items relied on for safety (IROFS) through the development, review, approval, control, and implementation of written plant procedures[1] that will protect the workers, the public, and the environment during testing, startup, and operation of the facility.

15.5.2 RESPONSIBILITY FOR REVIEW

Primary: Project Manager

Secondary: Primary staff reviewers of other management measures
Human Factors Engineer

Supporting: Fuel Cycle Facility Inspector

15.5.3 AREAS OF REVIEW

The staff's review of the license application should address the process the applicant has developed for the production, use, and management control of written plant procedures. This should include the basic elements of identification, development, verification, initial review, comment resolution, approval, validation, issuance, change control, and periodic review. There should be two general types of plant procedures:

A. Plant procedures used to directly control process operations, commonly called "operating procedures." These are procedures for workstation operators and they should include directions for normal operations as well as off-normal incidents caused by human error or equipment failure. Procedures of this type should include required actions to ensure nuclear criticality safety, chemical safety, fire protection, emergency planning, and environmental protection.

B. Plant procedures used to perform activities that support the process operations, commonly referred to as "management control procedures." These are procedures used to manage the conduct of activities such as configuration management, radiation safety, maintenance, human-systems interface, quality assurance, design control, test control,

---

[1] This SRP section provides guidance for the review of information on plant procedures identified as IROFS. Section G5 of SRP Appendix G on quality assurance and Basic Requirement 5 of ASME–NQA–1–1994 provide review guidance for other procedures (for example, construction procedures) relied on for safety.

startup, plant personnel training and qualification, audits and assessments, incident investigations, recordkeeping, and reporting.

15.5.4 ACCEPTANCE CRITERIA

15.5.4.1 Regulatory Requirements

The requirement for plant procedures is addressed in the following:

Nuclear Regulatory Commission (U.S.), Washington, D.C. "Domestic Licensing of Special Nuclear Material (10 CFR Part 70)." *Federal Register:* Vol. 64, No. 145. pp. 41338-41357. July 30, 1999.

Specific references are as follows:

A. In § 70.4, "Definitions," the term "management measures" is defined. Procedures are included as a management measure.

B. In § 70.22(a)(8), the application is required to include proposed procedures to protect health and minimize danger to life or property.

C. In § 70.62(d), the applicant or licensee is required to establish management measures to provide continuing assurance of compliance with the performance requirements.

D. In § 70.64(a)(1), the design of new facilities or new processes at existing facilities is required to be developed and implemented in accordance with management measures.

E. In § 70.65(a), the application is required to include a description of the management measures.

15.5.4.2 Regulatory Guidance

None.

15.5.4.3 Regulatory Acceptance Criteria

For the construction approval, the applicant should commit to establish a process for the production, use, and management control of written plant procedures that meets or exceeds the acceptance criteria in Section 15.5.4.

The reviewers should determine that the applicant's process for developing and implementing plant procedures is acceptable (for license approval) if the process satisfies the following:

A. Plant procedures should be written or planned for the conduct of all operations involving controls identified in the Integrated Safety Analysis (ISA) as activities relied on for safety and for all management control systems supporting those controls.

B. Operating procedures contain the following elements:

i. Purpose of the activity;
ii. Regulations, polices, and guidelines governing the procedure;
iii. Type of procedure;
iv. Steps for each operating process phase;
v. Initial startup;
vi. Normal operations;
vii. Temporary operations;
viii. Emergency shutdown;
ix. Emergency operations;
x. Normal shutdown;
xi. Startup following an emergency or extended downtime;
xii. Hazards and safety considerations;
xiii. Operating limits;
xiv. Precautions necessary to prevent exposure of hazardous chemicals or licensed special nuclear material (SNM);
xv. Measures to be taken if contact or exposure occurs;
xvi. Safety controls associated with the process and their functions; and
xvii. Specified time period or other limitations, if applicable, on the validity of the procedure.

C. Management control procedures reflect the important elements of the functions described in the applicable chapters of this SRP. Management control procedures should exist for the following activities:

i. Configuration management;
ii. Radiation safety;
iii. Maintenance;
iv. Human-systems interface;
v. Quality assurance;
vi. Training and qualification;
vii. Audits and assessments;
viii. Incident investigations;
ix. Records management;
x. Nuclear criticality safety;
xi. Fire safety;
xii. Chemical process safety;
xiii. Design control;
xiv. Test control;
xv. Startup; and
xvi. Reporting requirements.

D. The applicant's method for identifying plant procedures includes using ISA results to identify needed procedures. Operating procedures should provide specific direction regarding administrative controls to ensure operational safety.

E. The applicant's method for identifying, developing, approving, implementing, and controlling plant procedures should include, as a minimum:

   i. Operating limits and controls are specified in the procedure;

   ii. Procedures include required actions for off-normal conditions of operation as well as normal operations;

   iii. If needed, safety checkpoints are identified at appropriate steps in the procedure;

   iv. Procedures are validated through field tests or other methods where appropriate;

   v. Procedures are approved by management personnel responsible and accountable for the operation;

   vi. A mechanism is specified for revising and reissuing procedures in a controlled manner;

   vii. The quality assurance and configuration management programs at the facility provide reasonable assurance that current procedures are available at all work locations or, where not feasible for specific work locations, are readily accessible by all personnel and are used for all work.

   viii. The facility training program ensures that the required persons are trained in the use of the latest procedures.

F. The application should include the following statement regarding adherence to plant procedures: "Activities involving special licensed nuclear material will be conducted in accordance with approved procedures."

G. The applicant should discuss plant procedure categories used at the facility. An acceptable discussion should clearly state areas for which a plant procedure is required. The applicant should provide a list of the types of activities that are covered by the plant procedures. This list should include the topics of administrative plant procedures; system plant procedures that address startup, operation, and shutdown; abnormal operation/alarm response; maintenance activities that address system repair, calibration, inspection, and testing; and emergency procedures. Appendix H to this SRP provides an acceptable list of the items to be included under each topic.

H. The applicant should indicate that following an incident—such as an accident, unexpected transient, significant operator error, or equipment malfunction—or following any

modification to a system, an appropriate review of all applicable written plant procedures will take place.

I. The applicant should indicate how technical accuracy of plant procedures will be ensured as written. The discussion should identify who is responsible for verification.

J. The applicant should indicate how documents will be distributed in accordance with current distribution lists. A process limiting the use of outdated plant procedures should be addressed.

K. The applicant should describe how formal requirements governing temporary changes to plant procedures will be developed and implemented.

L. Formal requirements for design control of items relied on for safety should be provided and should identify who is responsible for design inputs, processes, outputs, changes, interfaces, and records.

M. A description of the test control program should be provided and should indicate that an effective program has been established for tests, including commissioning and preoperational tests. Acceptable plant procedures for test control should provide criteria for determining when a test is required or how and when testing activities are performed.

   i. Tests should be performed under conditions that simulate the most adverse design conditions, as determined by analysis.

   ii. Test results should be documented and evaluated, and their acceptability should be determined by a responsible individual or group.

N. Plant procedures for maintenance involving safety controls should commit to the topics listed below for corrective and preventive maintenance, functional testing after maintenance, and surveillance/monitoring of maintenance activities:

   i. Premaintenance activity involving reviews of the work to be performed, including appropriate reviews of facility procedures for maintenance for accuracy and completeness.

   ii. Steps that require notification of all affected parties (operators and supervisors) prior to performing work and upon completion of maintenance work.

   iii. Control of work by comprehensive facility procedures to be followed by maintenance technicians.

O. The applicant should commit to conducting periodic reviews of plant procedures to ensure their continued accuracy and usefulness. The applicant should establish the time frame for these reviews. At minimum, all procedures should be reviewed every 5 years. Emergency procedures should be reviewed every year initially and, if experience warrants,

subsequently reviewed at least every 2 years. All applicable procedures should be reviewed for major facility or process modifications.

P. The applicant should describe the use and control of procedures.

Q. A preoperational testing (startup) program should be described. Information pertaining to how, and to what extent, the facility operating, emergency, and surveillance procedures will be user-tested during this test program should be provided.

15.5.5 REVIEW PROCEDURES

15.5.5.1 Acceptance Review

The primary reviewer should perform an acceptance review to determine if the application adequately addresses the items in Section 15.5.3, "Areas of Review," for either the construction approval review or the review for a license to possess and use SNM. If the primary reviewer verifies that procedures are adequately addressed, the primary reviewer should accept the application for the safety evaluation in Section 15.5.5.2. If the primary reviewer identifies significant deficiencies in the material provided, the primary reviewer should request that the applicant submit additional information prior to the start of the safety evaluation.

15.5.5.2 Safety Evaluation

For the construction approval review, the reviewer should determine that the applicant has committed to management control of written plant procedures that will meet or exceed the acceptance criteria in Section 15.5.4.

After determining that the application for license approval is acceptable for review in accordance with Section 15.5.5.1, the primary reviewer should perform a safety evaluation against the acceptance criteria described in Section 15.5.4. On the basis of its review, the staff may request that the applicant provide additional information or modify the application to meet those acceptance criteria.

The safety evaluation forms the basis for staff findings and supports the reviewers' conclusions that the applicant has committed to:

A. Controls that are identified in the ISA for facility safety procedures (i.e., procedures that constitute administrative controls for safety).

B. Appropriate independent verification and validation of procedures for IROFS before use.

C. The independent review and approval, and, where appropriate, review and approval by an independent multidisciplinary safety review, and control by the configuration management function of any change to facility procedures.

D. Following approved procedures while processing licensed SNM.

E. Having procedures for the notification of operations personnel before and after maintenance is performed on safety controls.

Secondary staff reviewers should ensure that the applicant's facility procedures do not conflict with their primary review areas.

The supporting staff reviewer (Fuel Cycle Facility Inspector) should become familiar with the applicant's written plant procedures and determine whether ongoing activities are in agreement with them.

15.5.6 EVALUATION FINDINGS

The primary reviewer should document the safety evaluation by preparing material suitable for inclusion in the Safety Evaluation Report (SER). The primary reviewer should describe the review, explain the basis for the findings, and state the conclusions.

The staff could document the safety evaluation for the construction approval review by stating that the applicant has committed to establish a process for the production, use, and management control of written plant procedures that meets or exceeds the acceptance criteria in Section 15.5.4.

The staff could document the safety evaluation for the review for the license to possess and use SNM as follows:

> *The staff reviewed the license application for [insert facility name] according to Section 15.5 of NUREG–1718. The applicant has described suitably detailed processes for the development, review, approval, control, and implementation of procedures. [Insert a summary statement of what was evaluated and why the reviewer finds the submittal acceptable.] Special attention has been paid to items relied on for safety, as well as to systems important to the health of workers and the public and to the protection of the environment during testing, startup, and operation of the facility.*

15.5.7 REFERENCES

American Society of Mechanical Engineers (ASME). NQA–1–1994, "Quality Assurance Requirements for Nuclear Facility Applications." ASME: New York, New York. 1994.

Code of Federal Regulations, *Title 10, Energy,* Part 70, "Domestic Licensing of Special Nuclear Material."

Nuclear Regulatory Commission (U.S.), Washington, D.C. "Domestic Licensing of Special Nuclear Material (10 CFR Part 70)." *Federal Register:* Vol. 64, No. 146. pp. 41338– 1357. July 30, 1999.

———. "Guidance on Management Controls/Quality Assurance, Requirements for Operation, Chemical Safety, and Fire Protection for Fuel Cycle Facilities." *Federal Register:* Vol. 54, No. 53. pp. 11590–11598. March 21, 1989.

Nuclear Regulatory Commission (U.S.) (NRC). Regulatory Guide 1.33, Rev. 2, "Quality Assurance Program Requirements (Operation)." NRC: Washington, D.C. February 1978.

15.0 MANAGEMENT MEASURES
15.6 AUDITS AND ASSESSMENTS

15.6.1 PURPOSE OF REVIEW

The purpose of this review is to establish that the applicant developed and adequately described a system of audits and assessments that provides reasonable assurance that the items relied on for safety (IROFS) will be available and reliable to perform their safety function when needed, as required by 10 CFR Part 70.

15.6.2 RESPONSIBILITY FOR REVIEW

Primary: Quality Assurance (QA) Engineer/Specialist

Secondary: Project Manager

Supporting: Fuel Cycle Facility Inspector

15.6.3 AREAS OF REVIEW

The applicant should submit a description of the system of audits and assessments for the construction approval review and should submit updated information with the application for a license to possess and use special nuclear material (SNM). The applicant's system of audits and assessments should consist of two distinct levels of activities:

A. An independent internal or external audit is a QA organization activity to evaluate the scope, status, adequacy, programmatic compliance, and implementation effectiveness of QA and other management measures that provide reasonable assurance of continued availability and reliability of IROFS.

B. An internal or external assessment is a management activity to evaluate the scope, status, adequacy, programmatic compliance, and implementation effectiveness of QA and other management measures that provide reasonable assurance of continued availability and reliability of IROFS.

The following areas should be reviewed (construction approval):

A. Audits and assessments–general;
B. Audits;
C. Assessments; and
D. The applicant's provisions for continuing assurance.

15.6.4 ACCEPTANCE CRITERIA

15.6.4.1 Regulatory Requirements

The requirement for audits and assessments is addressed in the following:

Nuclear Regulatory Commission (U.S.), Washington, DC. "Domestic Licensing of Special Nuclear Material (10 CFR Part 70)." *Federal Register*: Vol. 64, No. 146. pp. 41338–41357. July 30, 1999.

Specific references are as follows:

A. In § 70.4, "Definitions," the term "management measures" is defined. Audits and assessments are included as a management measure.

B. In § 70.62(d), the applicant or licensee is required to establish management measures to provide continuing assurance of compliance with the performance requirements.

C. In § 70.64(a)(1), the design of new facilities or new processes at existing facilities is required to be developed and implemented in accordance with management measures.

D. In § 70.65(a), each application is required to include a description of the management measures.

15.6.4.2 Regulatory Guidance

None.

15.6.4.3 Regulatory Acceptance Criteria

The NRC reviewers should find that the applicant's audits and assessments provide reasonable assurance that the regulatory acceptance criteria below are adequately addressed and satisfied.

A. Audits and Assessments

General: Audits and assessments should be acceptable if:

i. Internal audits, external audits, and assessments are to be conducted with a graded approach based on the results of the integrated safety analysis (ISA; see SRP Chapter 5.0). The stated objective of the audits and assessments should be to objectively evaluate the effectiveness and proper implementation of QA and other management measures for IROFS and to address the technical adequacy of the items being audited/assessed.

ii. The applicant describes, commits to, and provides justification for a frequency and scope of audits and assessments of IROFS. A commitment to perform audits and assessments in all areas where the requirements for QA and other management measures are applicable should be provided. Audits and assessments will be regularly scheduled on the basis of the status and the safety significance of the items being audited/assessed and will be initiated early enough to ensure the implementation of effective QA and other management measures.

iii. Policy directives are established for audits and assessments. Policy directives cover schedules, guidance for conducting the audits and assessments, assigned responsibilities, and procedures for recording the audit/assessment results and ensuring that identified deficiencies are corrected in a timely and effective manner for each activity audited/assessed.

iv. The applicant identifies the position title, qualifications, and responsibilities of the manager responsible for the overall success of the audits and assessments. Other organizational responsibilities for audits and assessments should be identified in the application.

v. The applicant describes the training and qualification requirements for audit and assessment personnel. (SRP Section 15.4 addresses training and qualification requirements in detail.)

vi. The applicant describes the authority each audit and assessment team has to investigate any aspect of the audited/assessed items with access to all relevant information.

vii. Performance indicators are established so that audit and assessment personnel can determine the degree to which IROFS are meeting performance requirements.

viii. Audits and assessments are conducted according to written procedures/checklists. (SRP Section 15.5 provides procedure guidance.)

ix. Audits and assessments include detailed walkdowns of plant areas, including out-of-the-way and limited-access areas, with provisions for accurate, documented descriptions of any deficiencies.

x. The applicant describes provisions for on-the-spot corrective actions with appropriate documentation.

xi. Audit and assessment results are reviewed by management having responsibility in the area audited/assessed.

xii. Audit and assessment findings and recommendations are documented and distributed to appropriate management for review and response. As described in SRP

Section 15.1, a corrective action program is administered to ensure timely and effective corrective action.

xiii. Audit and assessment deficiency data are analyzed and trended and resultant reports, which indicate quality trends and the effectiveness of management measures, are given to appropriate management for review, response, corrective action, and follow-up.

B. Audits

Audits should be acceptable if, in addition to addressing the acceptance criteria in Section 15.6.4.3.1 above:

i. Audit personnel have no direct responsibility for the items they audit.

ii. Audits are led by appropriately qualified and certified audit personnel from the QA organization.

iii. Audit team membership may include personnel (not necessarily from the QA organization) who have technical expertise in the areas being audited.

iv. Technical and programmatic audits are performed internally (that is, within the applicant's organization) and externally (that is, within the organization of suppliers, contractors, and subcontractors) and these audits provide a comprehensive independent verification and evaluation of procedures and activities for IROFS.

v. Auditing organizations schedule and conduct appropriate follow-up to ensure timely and effective corrective action.

vi. Audit reports are issued to appropriate management on a timely basis.

vii. Reports on the status of corrective actions for audit findings are issued periodically to appropriate management.

viii. Internal audits address compliance with selected operating limits during facility operation.

C. Assessments

Assessments should be acceptable if, in addition to addressing the acceptance criteria in Section 15.6.4.3.1 above, the application indicates that responsible management personnel (or that qualified, but not necessarily certified, personnel with no direct responsibility for the items being assessed who are designated by the responsible management) perform the assessments.

D. Applicant's Provisions for Continuing Assurance

The applicant's provisions for continuing audits and assessments should be acceptable if changes to the program of audits and assessments due to reorganizations, revised activities, lessons learned, changes to applicable regulations, and other changes are reviewed and reflected in the program description.

The applicant should also commit to update the system of audits and assessments to reflect any changes in the license application between the construction approval review and the review for a license to possess and use SNM.

15.6.5 REVIEW PROCEDURES

15.6.5.1 Acceptance Review

The primary reviewer should perform an acceptance review to determine if the application adequately addresses the items in Section 15.6.3, "Areas of Review," for either the construction approval review or the review for a license to possess and use SNM. If the primary reviewer verifies that audits and assessments are adequately addressed, the primary reviewer should accept the application for the safety evaluation in Section 15.6.5.2. If the primary reviewer identifies significant deficiencies in the material provided, the primary reviewer should request that the applicant submit additional information prior to the start of the safety evaluation.

15.6.5.2 Safety Evaluation

After determining that the application is acceptable for review in accordance with Section 15.6.5.1, the primary reviewer should perform a safety evaluation against the acceptance criteria described in Section 15.6.4. On the basis of its review, the staff may request that the applicant provide additional information or modify the application to meet those acceptance criteria.

The primary reviewer should determine whether the applicant has adequately planned for audits and assessments to be accomplished and whether necessary policies, personnel, procedures, and instructions will be in place to begin audits and assessments early, that is, during the ISA process and the design of IROFS.

The secondary reviewer should confirm that the applicant's audit and assessment commitments are consistent with other sections of the submittal.

The supporting reviewer should become familiar with the applicant's audit and assessment commitments and determine whether the ongoing audits and assessments of the applicant and the applicant's suppliers, contractors, and subcontractors are in agreement with them.

The review should result in a determination that the audits and assessments will provide additional assurance that IROFS will perform satisfactorily in service and that activities relied on for safety will be performed satisfactorily.

Management Measures

When the applicant updates the system of audits and assessments, the primary reviewer should focus the review on any new or changed material. The primary reviewer should also confirm that the material presented remains consistent with the material provided in the license application for operations in support of other chapters of this SRP.

15.6.6 EVALUATION FINDINGS

The primary reviewer should document the safety evaluation by preparing material suitable for inclusion in the Safety Evaluation Report (SER). The primary reviewer should describe the review, explain the basis for the findings, and state the conclusions.

The staff could document a safety evaluation of the application for the construction approval review as follows:

> *The staff reviewed the license application for construction approval for [insert facility name] according to Section 15.6 of NUREG–1718. [Here the primary reviewer provides a summary statement of what was evaluated and why the reviewer finds the submittal acceptable.] Based on its review of the application, the NRC staff concludes that the applicant has adequately described its system of audits and assessments, and the applicant's system of audits and assessments meets the requirements of 10 CFR Part 70 and provides reasonable assurance of protection of public health and safety and of the environment.*

The staff could document a safety evaluation for the license to possess and use SNM as follows:

> *[Here the primary reviewer provides a summary statement of what was evaluated and why the reviewer finds the submittal acceptable.] Based on its review of the application for a license to possess and use special nuclear material, focusing on new or updated material when compared with the safety evaluation for construction approval, the NRC staff concludes that the applicant has adequately described its updated system of audits and assessments, and the applicant's updated system of audits and assessments meets the requirements of 10 CFR Part 70 and thus provides reasonable assurance of protection of public health and safety and of the environment.*

15.6.7 REFERENCES

Code of Federal Regulations, *Title 10, Energy*, Part 70, "Domestic Licensing of Special Nuclear Material."

Nuclear Regulatory Commission (U.S.), Washington, D.C. "Domestic Licensing of Special Nuclear Material (10 CFR Part 70)." *Federal Register:* Vol. 64, No. 146. pp. 41338-41357. July 30, 1999.

15.0 MANAGEMENT MEASURES
15.7 INCIDENT INVESTIGATIONS

15.7.1 PURPOSE OF REVIEW

The purpose of this review is to establish, with reasonable assurance, that the applicant will have a system in place for the systematic investigation of incidents[1], assignment and acceptance of corrective actions, and follow-up to ensure completion of the actions. The review should confirm that incidents will be investigated and corrective action taken to prevent (or minimize) their recurrence or their leading to more serious consequences. Furthermore, the review should find that the results of incident investigations will be compared against the Integrated Safety Analysis (ISA) Summary (see SRP Chapter 5.0) to provide assurance that there is continued compliance with the performance requirements contained in 10 CFR Part 70.

15.7.2 RESPONSIBILITY FOR REVIEW

Primary: Project Manager

Secondary: Quality Assurance (QA) Engineer/Specialist and ISA Reviewers

Supporting: Fuel Cycle Facility Inspector

15.7.3 AREAS OF REVIEW

The staff's review of the license application should encompass the following areas:

A. The description of the functions, qualifications, and responsibilities of the management person who would lead the investigation and those of team members[2], the scope of the investigation person or team's authority and responsibilities, the process for determining the need for an investigation team rather than an individual investigator, and assurance of cooperation of management.

B. The investigation person's or team's ability to obtain all the information considered necessary and independence from responsibility for or to the functional area involved in the incident under investigation.

C. The maintenance of documentation consistent with SRP Section 15.8, "Records Management."

---

[1] Incidents are unplanned events such as accidents, unexpected transients, equipment malfunctions, operator error, and unacceptable performance deficiencies.

[2] Individual members of the team may have responsibility for the functional area provided that they had no involvement in the incident being investigated. The team leader or individual investigator is independent of the functional area involved in the incident.

D. Guidance for the person or team conducting the investigation on how to apply a reasonable, systematic, structured approach to determine the root cause(s) of the incident and any generic implications.

E. The system for comparing the results of the investigation against the ISA.

F. The system for monitoring to ensure completion of any corrective measures specified, including revisions to the ISA.

15.7.4 ACCEPTANCE CRITERIA

15.7.4.1 Regulatory Requirements

Nuclear Regulatory Commission (U.S.), Washington, D.C. "Domestic Licensing of Special Nuclear Material (10 CFR Part 70)." *Federal Register*: Vol. 64, No. 146. pp. 41338–41357. July 30, 1999.

Specific references are as follows:

A. In § 70.4, "Definitions," the term "management measures" is defined. Incident investigations are included as a management measure.

B. In § 70.62(d), the applicant or licensee is required to establish management measures to provide continuing assurance of compliance with the performance requirements.

C. In § 70.64(a)(1), the design of new facilities or the design of new processes at existing facilities is required to be developed and implemented in accordance with management measures.

D. In § 70.65(a), the application is required to include a description of the management measures.

15.7.4.2 Regulatory Guidance

See the references listed in Section 15.7.7 for useful background information on specific aspects of incident management, such as corrective action and root cause analysis.

15.7.4.3 Regulatory Acceptance Criteria

For the construction approval review, the applicant should commit to establishing a system for the systematic investigation of incidents, assignment and acceptance of corrective actions, and follow-up to ensure completion of the actions that meets or exceeds the acceptance criteria in Section 15.7.4.

The NRC reviewers should find the license application for operations acceptable if the applicant's system of incident investigations provides reasonable assurance that the regulatory acceptance criteria below are adequately addressed and satisfied. Some of the information may be referenced to other sections of the SRP, or incorporated by reference, provided that these references are clear and specific.

A. Acceptability should be based on commitments for the prompt investigation of incidents that include the following elements:

   i. The establishment of teams to investigate incidents that may occur during operation of the facility, to determine the root cause(s) of the incident and any generic implications, and to recommend corrective actions.

   ii. The monitoring and documenting of corrective actions (including effectiveness) through completion.

   iii. The maintenance of documentation so that "lessons learned" may be applied to future operations of the facility. Details of the incident sequence should be compared with incident sequences already considered in the ISA, and actions should be taken to ensure that the ISA includes the evaluation of the risk associated with incidents of the type actually experienced.

B. Acceptability should be based on the adequacy of the applicant's commitments to establish and use a plan for the investigation of incidents. Acceptability should also be based on the following acceptance criteria:

   i. The licensee has described the overall plan and method for investigating incidents. The plan is separate from any required emergency plan.

   ii. The functions, responsibilities, and scope of authority of investigation teams are documented in the plan.

   iii. Qualified internal or external investigators are appointed to serve on investigation teams. Each team should include at least one process expert and one team member trained in root cause analysis.

   iv. The investigation process and investigation person or team members are independent of the line function(s) involved with the incident under investigation[2], and participants are assured of protection from retribution for participating in investigations.

   v. A reasonable, systematic, structured approach is used to determine the root cause(s) of incidents. The level of investigation should be based on a graded approach relative to the severity of the incident.

   vi. Auditable records and documentation related to incidents, investigations, and root cause analysis are maintained.

vii. For each incident, an incident report is prepared that includes a description of the incident, contributing factors, root cause analysis, findings, and recommendations. Relevant findings should be reviewed with all affected personnel, and the reports should be made available to the NRC on request.

viii. Documented corrective actions are taken within a reasonable period to resolve findings from incident investigations.

15.7.5 REVIEW PROCEDURES

15.7.5.1 Acceptance Review

The primary reviewer should perform an acceptance review to determine if the application adequately addresses the items in Section 15.7.3, "Areas of Review," for either the construction approval review or the review for a license to possess and use special nuclear material (SNM). If the primary reviewer verifies that incident investigations are adequately addressed, the primary reviewer should accept the application for the safety evaluation in Section 15.7.5.2. If the primary reviewer identifies significant deficiencies in the material provided, the primary reviewer should request that the applicant submit additional information prior to the start of the safety evaluation.

15.7.5.2 Safety Evaluation

For construction approval, the reviewer should determine that the applicant has committed to a system for the systematic investigation of incidents, assignment and acceptance of corrective actions, and follow-up to ensure completion of the actions that will meet or exceed the acceptance criteria in Section 15.7.4.

For a license application for operations, after determining that the application is acceptable for review in accordance with Section 15.7.5.1, the primary reviewer should perform a safety evaluation against the acceptance criteria described in Section 15.7.4. On the basis of its review, the staff may request that the applicant provide additional information or modify the application to meet those acceptance criteria.

The review should determine if the applicant has adequately planned for incident investigations to be conducted and resulting corrective actions to be appropriately implemented.

The primary reviewer should confirm that the organizational structure for incident investigations is consistent with SRP Chapter 4.0, "Organization and Administration."

The QA secondary reviewer should verify that methods used for determining root causes and any generic implications, procedures for tracking and implementing the corrective actions, and the process of applying the "lessons learned" to the other operations are appropriate for incident investigations.

The ISA reviewers should verify that the applicant ensures that the results of the investigation are compared against the ISA and that the necessary follow-up actions occur.

The supporting reviewer(s) should become familiar with pertinent procedures and determine whether planned future and ongoing activities are consistent with them.

15.7.6 EVALUATION FINDINGS

The primary reviewer should document the safety evaluation by preparing material suitable for inclusion in the Safety Evaluation Report (SER). The primary reviewer should describe the review, explain the basis for the findings, and state the conclusions.

The staff could document the safety evaluation for the construction approval review by stating that the applicant has committed to establishing a system for the systematic investigation of incidents, the assignment and acceptance of corrective actions, and follow-up to ensure completion of the actions that meets or exceeds the acceptance criteria in Section 15.7.4.

The staff could document a safety evaluation for the review for the license to possess and use SNM as follows:

> *The staff reviewed the license application for [insert facility name] according to Section 15.7 of NUREG–1718. Based on its review, [Insert a summary statement of what was evaluated and why the reviewer finds the submittal acceptable.] The NRC staff concluded that the applicant has committed to and established an organization responsible for investigating incidents that occur during operation of the facility, determining the root cause(s) and any generic implications of each incident, and taking corrective actions for ensuring a safe facility and safe facility operations in accordance with the acceptance criteria of Section 15.7.4 of the SRP; committed to review the results of the investigation against the ISA; committed to monitoring and documenting corrective actions through completion; and committed to the maintenance of related documentation and the application of "lessons learned" to future operations of the facility.*

Accordingly, the staff concludes that the applicant's description of the incident investigation process complies with applicable NRC regulations and is adequate.

15.7.7 REFERENCES

Code of Federal Regulations, *Title 10, Energy,* Part 70, "Domestic Licensing of Special Nuclear Material."

Department of Energy (U.S.) (DOE). DOE–STD–1010–92, "Guide to Good Practices for Incorporating Operating Experiences." DOE: Washington, D.C. July 1992.

———. DOE–NE–STD–1004–92, "Root Cause Analysis Guidance Document." DOE: Washington, D.C. February 1992.

Nuclear Regulatory Commission (U.S.), Washington, D.C. "Domestic Licensing of Special Nuclear Material (10 CFR Part 70)." *Federal Register:* Vol. 64, No. 146. pp. 41338-41357. July 30, 1999.

Nuclear Regulatory Commission (U.S.) (NRC). Information Notice 96–28, "Suggested Guidance Relating to Development and Implementation of Corrective Action." NRC: Washington, D.C. May 1996.

———. NUREG/CR–4616, "Root Causes of Component Failures Program: Methods and Applications." NRC: Washington, D.C. December 1986.

———. NUREG/CR–5665, "A Systematic Approach to Repetitive Failures." NRC: Washington, D.C. February 1991.

15.0 MANAGEMENT MEASURES
15.8 RECORDS MANAGEMENT

15.8.1 PURPOSE OF REVIEW

The purpose of this review is to verify that the applicant has established a facility records management system that complies with NRC requirements.

15.8.2 RESPONSIBILITY FOR REVIEW

Primary: Project Manager

Secondary: None

Supporting: Primary reviewers of SRP Sections 15.1, "Quality Assurance," and 15.2, "Configuration Management"

15.8.3 AREAS OF REVIEW

The applicant should submit a description of the facility records management system for the construction approval review and should submit updated information with the application for a license to possess and use special nuclear material (SNM).

Areas related to the handling and storing of records generated or needed in the design, construction, and operation phases of the facility, including the following, should be reviewed for construction approval.

A. The process whereby records—such as training records, dosimetry records, effluent records, and records regarding the facility structures, systems, or components that are items relied on for safety—are specified, created, verified, categorized, indexed, inventoried, protected, stored, maintained, distributed, and deleted or preserved. The process may be linked with or be a part of the facility quality assurance and configuration management systems.

B. The handling and control of various kinds of records and the methods of recording media that comprise the records, including contaminated and classified records.

C. The physical characteristics of the record storage facilities with respect to the preservation and protection of the records for their designated lifetimes.

15.8.4 ACCEPTANCE CRITERIA

15.8.4.1 Regulatory Requirements

The requirements for records management are addressed in the following:

A. Code of Federal Regulations, *Title 10, Energy*, Part 19, "Notices, Instructions and Reports to Workers: Inspection and Investigations."

B. ———, *Title 10, Energy*, Part 20, "Standards for Protection Against Radiation."

C. ———, *Title 10, Energy*, Part 21, "Reporting of Defects and Noncompliance."

D. ———, *Title 10, Energy*, Part 25, "Access Authorization for Licensee Personnel."

E. Nuclear Regulatory Commission (U.S.), Washington, D.C. "Domestic Licensing of Special Nuclear Material (10 CFR Part 70)." *Federal Register:* Vol. 64, No. 146. pp. 41338-41357. July 30, 1999.

15.8.4.2 Regulatory Guidance[1]

Regulatory guidance applicable to the area of records management is as follows:

U.S. Nuclear Regulatory Commission (U.S.) (NRC). NUREG-1460, Rev. 1, "Guide to NRC Reporting and Recordkeeping Requirements." NRC: Washington, D.C. July 1994.

15.8.4.3 Regulatory Acceptance Criteria

The reviewer should find the applicant's records management system acceptable if it satisfies the following criteria:

A. Records are specified, prepared, verified, characterized, and maintained.

B. Records are legible, identifiable, and retrievable for their designated lifetimes.

C. Records are protected against tampering, theft, loss, unauthorized access, damage, or deterioration for the time they are in storage.

---

[1] Additional guidance for records is given in SRP Appendix G on quality assurance (Section G17) and in ASME–NQA–1–1994 (Basic Requirement 17 and Supplement 17S–1) as referenced in SRP Section 15.1, "Quality Assurance."

D. Procedures are established and documented specifying the requirements and responsibilities for record selection, verification, protection, transmittal, distribution, retention, maintenance, and disposition.

E. The organization and procedures are in place to promptly detect and correct any deficiencies in the records management system or its implementation.

Examples of the types of records that could be included in the system and that contribute to providing reasonable assurance of protection of worker and public health and safety and of the environment are listed in Appendix I to this SRP. Records should be categorized by relative safety importance to identify record protection and storage needs and to designate the retention period for individual kinds of records. The procedures should assign responsibilities for records management; specify the authority needed for records retention or disposal; specify which records must have controlled access and provide the controls needed; provide for the protection of records from loss, damage, tampering, or theft during an emergency; and specify procedures for ensuring that the records management system remains effective.

For records consisting of computer codes/computerized data relied on for safety, the application should establish and describe procedure(s) for maintaining readability and usability of older codes/data as computing technology changes.

The applicant should also commit to update the facility records management system to reflect any changes in the license application between the construction approval review and the review for a license to possess and use SNM.

15.8.5 REVIEW PROCEDURES

15.8.5.1 Acceptance Review

The primary reviewer should perform an acceptance review to determine if the application adequately addresses the items in Section 15.8.3, "Areas of Review," for either the construction approval review or the review for a license to possess and use SNM. If the primary reviewer verifies that the records management system is adequately addressed, the primary reviewer should accept the application for the safety evaluation in Section 15.8.5.2. If the primary reviewer identifies significant deficiencies in the material provided, the primary reviewer should request that the applicant submit additional information prior to the start of the safety evaluation.

15.8.5.2 Safety Evaluation

After determining that the application is acceptable for review in accordance with Section 15.8.5.1, the primary reviewer should perform a safety evaluation against the acceptance criteria described in Section 15.8.4. On the basis of its review, the staff may request that the applicant provide additional information or modify the application to meet those

acceptance criteria. The primary reviewer should coordinate this review with the primary reviewers of SRP Sections 15.1, "Quality Assurance," and 15.2, "Configuration Management."

When the applicant updates the facility records management system in the application for a license to possess and use SNM, the primary reviewer should focus the review on any new or changed material. The primary reviewer should also confirm that the material presented remains consistent with the material provided in the license application for operations in support of other chapters of this SRP.

15.8.6 EVALUATION FINDINGS

The primary reviewer should document the safety evaluation by preparing material suitable for inclusion in the Safety Evaluation Report (SER). The primary reviewer should describe the review, explain the basis for the findings, and state the conclusions.

The staff could document a safety evaluation for the construction approval review as follows:

> *The staff reviewed the application for a construction approval for [insert facility name] according to Section 15.8 of NUREG–1718. The staff reviewed the applicant's records management system [Insert a summary statement of what was evaluated] and concluded that there is reasonable assurance that the system will (1) be effective in collecting, verifying, protecting, and storing information about the health and safety aspects of the facility and its operations and will be able to retrieve the information in readable form for the designated lifetimes of the records; (2) provide record storage facilities capable of protecting and preserving records that are stored there during the mandated periods, including protecting the stored records against loss, theft, tampering, or damage during and after emergencies; and (3) ensure that any deficiencies in the records management system or its implementation will be detected and corrected in a timely manner. The staff concludes that the applicant's facility records management system meets the requirements of 10 CFR Part 70 and is acceptable.*

The staff could document a safety evaluation for review for a license to possess and use SNM using a paragraph similar to the one used for the construction approval review, but encompassing the new or changed material when compared with the safety evaluation for the construction approval.

15.8.7 REFERENCES

American Society of Mechanical Engineers (ASME). NQA–1–1994, "Quality Assurance Requirements for Nuclear Facility Applications." ASME: New York, New York. 1994.

Code of Federal Regulations, *Title 10, Energy,* Part 19, "Notices, Instructions and Reports to Workers: Inspection and Investigations."

———. *Title 10, Energy*, Part 20, "Standards for Protection Against Radiation."

———. *Title 10, Energy*, Part 21, "Reporting of Defects and Noncompliance."

———. *Title 10, Energy*, Part 25, "Access Authorization for Licensee Personnel."

———. *Title 10, Energy*, Part 70, "Domestic Licensing of Special Nuclear Material."

Nuclear Regulatory Commission (U.S.), Washington, D.C. "Domestic Licensing of Special Nuclear Material, (10 CFR Part 70)." *Federal Register:* Vol. 64, No. 146. pp. 41338-31357. July 30, 1999.

Nuclear Regulatory Commission (U.S.) (NRC). NUREG-1460, Rev. 1, "Guide to NRC Reporting and Recordkeeping Requirements." NRC: Washington, D.C. July 1994.

APPENDIX A
EXAMPLE PROCEDURE FOR RISK EVALUATION

NRC requires that an applicant evaluate its compliance with the performance requirements defined in 10 CFR 70.61, which stipulate that certain consequences must be sufficiently unlikely. In addition, 10 CFR 70.62(c) requires that the applicant perform an Integrated Safety Analysis (ISA) to identify all potential accident sequences and to assess their consequences. These two requirements are related. The consequences result from accident sequences identified in the ISA. Thus, to show that the likelihood of occurrence of the consequences is sufficiently low, the applicant must show that for each of the accident sequences identified in the ISA, the resulting consequences are sufficiently unlikely.

As defined in 10 CFR 70.61, the required likelihood is graded according to the severity of the consequences of the accident. Accidents in the intermediate consequence category of § 70.61(c) must be "unlikely," while those in the high consequence category of § 70.61(b) must be "highly unlikely." The procedure described in this appendix is one way by which the applicant may use the ISA results to demonstrate that the requirements of 10 CFR 70.61 have been met. If the applicant evaluates accidents using a different method, the method should produce similar results in terms of how accidents are categorized. This method should be regarded as a screening method, not as a definitive method of proving the adequacy or inadequacy of the controls for any particular accident. The method requires the applicant to identify and evaluate the characteristics of controls used to limit accident sequences in a consistent manner. This will permit identification of accident sequences with defects in the combination of controls used. Such controls can then be further evaluated or improved to establish adequacy. The procedure also ensures the consistent evaluation of similar controls by different ISA teams. Sequences or controls that have risk significance and are evaluated as marginally acceptable are good candidates for more detailed evaluation by the applicant and the reviewer.

The tabular accident summary resulting from the ISA should identify, for each sequence, what safety controls must fail to exceed the consequence defined in the performance requirements of 10 CFR 70.61. Chapter 5.0 specifies acceptance criteria for these safety controls, such that the performance requirements of § 70.61 are met. These criteria require that safety controls be sufficiently unlikely to fail. However, the criteria of Chapter 5.0 do not provide for a method for assessing likelihood. This appendix describes an acceptable procedure for this required assessment of likelihood.

A1. DETERMINING COMPLIANCE WITH GRADED PROTECTION REQUIREMENTS

The regulations in 10 CFR Part 70.61 describe requirements for a graded system of protection sufficient to bound the risk of identified accidents by making accidents with a higher potential for consequences have a proportionately lower likelihood of occurrence. The performance requirements designate two categories of consequences into which an accident may fall. The first category is referred to in § 70.61 as "high consequences," the second as "intermediate consequences." Implicitly there is a third category, namely, those accidents that produce consequences less than "intermediate." These will be referred to as "low consequence" accidents. Since the primary purpose of process hazard analysis is to identify all accidents

having consequences that do not comply with the performance requirements, it will, in some cases, be necessary to identify accidents that produce radioactive or chemical exposures, then subsequently determine that some of these exceed the threshold values of the regulation. For this reason, the list of accidents resulting from such analysis will include such low consequence accidents to show that they have been considered. Otherwise the analysis will not have demonstrated its completeness.

The limits defining the three accident consequence categories are given in Table A–1. The categories are numbered in ascending order of the magnitude of their consequences. The usefulness of this numbering will be evident later. The symbols CHEM3, CHEM2, and CHEM1 refer to quantitative standards selected by the applicant in accordance with 10 CFR 70.61(b)(4)(ii) or 70.61(c)(4)(ii) – *e.g.*, AEGL or ERPG, as appropriate.

Consequence Category 3—High Consequences

An accident resulting in any consequence specified in § 70.61(b); that is: an acute worker exposure of 1 Sv (100 rem)[1] or greater TEDE[2], or a chemical exposure that could endanger the life of a worker (as defined by the applicant); or acute exposure of a member of the public outside the controlled area to a radiation dose (D) of 0.25 Sv (25 rem) or greater TEDE, a 30 mg soluble uranium intake, or a chemical exposure that could lead to irreversible or other serious long-lasting health effects, as defined by the applicant (represented herein as CHEM3).

Consequence Category 2—Intermediate Consequences

An accident resulting in any consequence specified in § 70.61(c). That is, acute exposure of a worker to a radiation dose of 0.25 Sv (25 rem) or greater but less than 1 Sv (100 rem) TEDE, or chemical exposure that could lead to irreversible or other serious long-lasting health effects, as defined by the applicant (represented herein as CHEM2); or acute exposure of a member of the public outside the controlled area to a radiation dose of 0.05 (5 rem) or greater but less than 0.25 Sv (25 rem) TEDE, or a chemical exposure that could cause mild transient health effects, as defined by the applicant (represented herein as CHEM1); or prompt release of radiation outside the restricted area that would, if averaged over a 24-hour period, exceed 5,000 times the values specified in Table 2 of Appendix B to 10 CFR Part 20.

Consequence Category 1—Low Consequences

Any accident with potential adverse radiological or chemical consequences but at exposures less than consequence Categories 3 and 2 above.

---

[1] A nuclear criticality would normally be considered a high consequence event because of the potential for producing a high radiation dose to a worker.

[2] TEDE is Total Effective Dose Equivalent (see 10 CFR Part 20), represented by 'D'.

TABLE A–1: Consequence Severity Categories Based on 10 CFR 70.61

	Workers	Offsite Public	Environment
Consequence Category 3: High	$D^2 \geq 1$ Sv (100 rem) $\geq$ CHEM3	D $\geq$ 0.25 Sv (25 rem) 30 mg sol U intake $\geq$ CHEM2	
Consequence Category 2: Intermediate	0.25 Sv $\leq$ D < 1 Sv $\geq$ CHEM2 but < CHEM3	0.05 Sv$\leq$D < 0.25 Sv $\geq$CHEM1 but < CHEM2	radioactive release > 5,000 x Table 2 App. B 10 CFR 20
Consequence Category 1: Low	Accidents of lesser radiological and chemical exposures to workers than those above in this column	Accidents of lesser radiological and chemical exposures to the public than those above in this column	Radioactive releases producing effects less than those specified above in this column

Corresponding to the two consequence categories of the rule (Categories 2 and 3 above), § 70.61 requires corresponding levels of graded protection, that is, engineered or administrative controls (or a combination thereof), sufficient to ensure that the likelihood of these adverse events is correspondingly low. The two categories of likelihood thus prescribed are:

Likelihood Category 1: Consequence Category 3 accidents must be "highly unlikely."

Likelihood Category 2: Consequence Category 2 accidents must be "unlikely."

Implicitly there is a third category into which an accident could fall, that is, it could fail to be "unlikely." This category will be referred to in this document as:

Likelihood Category 3: "Not unlikely." Although this likelihood category includes unintended events that might actually be expected to happen, others might be less frequent. For this reason, the term "likely" was not used for these events.

Per 10 CFR 70.61, the applicant must use the ISA is to document its compliance with the performance requirements. This evaluation should be done using a tabular summary of identified accident sequences. One acceptable way of doing so is for the applicant to assign two category numbers to each accident sequence, one based on its consequences and one for likelihood. The product of these two category numbers is then used as a risk index. Listing this calculated risk index in the tabular summary provides a simple method for showing that the graded protection requirements have been met for each accident sequence. A risk index value less than or equal to "4" means the sequence is acceptable. If the applicant provides this risk

index in one column of the tabular summary, the reviewer can quickly scan this column to confirm that each accident conforms to the safety performance requirements of 10 CFR 70.61. This system is equivalent to assigning each accident to a cell in a three by three matrix. This conceptual matrix is shown in Table A-2. The values in the risk matrix cells are the risk index numbers.

TABLE A–2: Risk Matrix

	Likelihood Category 1: Highly Unlikely	Likelihood Category 2: Unlikely	Likelihood Category 3: Not Unlikely
Consequence Category 3: High	3 acceptable	6 unacceptable	9 unacceptable
Consequence Category 2: Intermediate	2 acceptable	4 acceptable	6 unacceptable
Consequence Category 1: Low	1 acceptable	2 acceptable	3 acceptable

To demonstrate compliance with the system described above, the applicant needs to assign consequence categories to each identified accident to determine which likelihood requirement applies. Those accident sequences identified as high or intermediate consequences must then be assigned to a likelihood category. To be acceptable, these assigned consequences and likelihoods must have a valid basis, and the applicant must demonstrate this basis in the documentation submitted in the application. The following sections describe an acceptable method for making these assignments.

A2. CONSEQUENCE CATEGORY ASSIGNMENT

The assignment of consequence categories is based on estimated consequences of prototype accidents. Criteria for the presentation of these estimates by the applicant is described in SRP Section 5.4.3.2(B)(iv). Although consequences of accidents can be determined by actual calculations, it is not necessary that such a calculation be performed for each individual accident sequence listed. Accident consequences may be estimated by comparison to similar events for which reasonably bounding conservative calculations have been made. The applicant should document the bases for bounding calculations of the consequence assignment in the submittal. NUREG/CR–6410, "Nuclear Fuel Cycle Facility Accident Analysis Handbook," describes valid methods and data to be used by the applicant and may be used for confirmatory evaluations by the reviewer.

A3. LIKELIHOOD CATEGORY ASSIGNMENT

An assignment of an accident sequence to a likelihood category is acceptable if it is based on the record of failures at the facility or other methods that have objective validity. Failure data from other facilities may also be used, but care should be taken to ensure its applicability. Because the sequences leading to accidents often involve multiple failures, a combination of failure frequency and probability values determines the likelihood of the whole accident sequence. These values include the frequencies of initiating events and failure likelihoods of safety controls. As described below, the applicant may estimate an approximate likelihood category for an accident sequence by considering all the events involved. This method uses the number, type, independence, and observed failure history of safety controls. However, correctly evaluating the appropriate likelihood of accidents using such a qualitative approach depends on the informed judgement of the analyst. Safety controls, even those of the same type, have a wide range of reliability. The ultimate criterion for acceptability is that the frequencies of initiating events and the likelihood of failure of safety controls involved is sufficiently low so that the entire accident sequence is "highly unlikely" or "unlikely" as required by 10 CFR 70.61. The virtue of the approach is that it requires explicit consideration of some of the underlying events and factors that affect the likelihood of the accident. Another virtue is that the more explicit the criteria for assignment are, the more consistent are the results.

Underlying any evaluation of an accident sequence as "unlikely" or "highly unlikely" is an implied assessment of its "likelihood" or frequency of occurrence. The structured procedure described below will indicate which likelihood category may be appropriate for an event. To maintain internal consistency in evaluating different control systems and accidents, it was necessary to derive this structured procedure based on the underlying frequencies of events. The following numerical guidelines are used for the purposes of this example. The underlying frequencies are based on definite assumptions about the numbers of intermediate and high consequence events, as discussed in SRP Section 5.4.3.2.

Likelihood Category 1: Highly unlikely, a frequency of less than 10^{-5} per year per accident.

Likelihood Category 2: Unlikely[3], a frequency of less than 4×10^{-4} per year per accident (but more frequent than 10^{-5}).

Likelihood Category 3: Not unlikely, more frequent than 4×10^{-4} per year per accident.

In assigning specific numerical values to these likelihood categories, we are making definitive assumptions about the number of accident sequences. The Commission's strategic goals are stated in terms of total industry risk, so that the per accident probabilities must be expressed as the cumulative likelihood divided by the total number of accident sequences. For the purposes

[3] A distinction must be drawn between the concept of "unlikely" in regard to intermediate consequence events and "unlikely" in regard to the double contingency principle. The above definition of unlikely does not apply to a nuclear criticality (which should be regarded as a high consequence event in unshielded facilities in most instances). In meeting double contingency, "unlikely" typically means $\leq 10^{-2}$.

of this example, it will be assumed throughout the remainder of this appendix that there are 100 intermediate consequence accidents and 1,000 high consequence accidents throughout the industry (these numbers provide results that are consistent with those stated in SRP Section 5.4.3.2 (p. 5.0–28)).

With this assumption, each individual accident sequence in this likelihood category should have a frequency no greater than 10^{-5} per year (i.e., one accident of this type every 100,000 years). This number can be multiplied by the total number of accident sequences to give the cumulative likelihood of all accident sequences in a given category at the facility, in units of yr^{-1}.

In assessing the adequacy of safety controls, individual accident frequencies greater than 10^{-5} per year may not be assigned a likelihood Category 1, that is, "highly unlikely." The NRC has a strategic safety performance measure of no inadvertent nuclear criticalities. For this reason, the acceptability of any given frequency depends on the total number of accidents that may be identified. Since the total number and consequences of all potential accidents at a facility is not accurately known until its ISA is completed, it is difficult to establish a definitive acceptable frequency. Individual accidents may need to be limited to lower frequencies to meet the performance requirements. On the other hand, the fact that a particular accident sequence is below this value does not automatically mean that it is clearly acceptable. The frequencies should be used as a guideline in developing more consistent and objective standards for safety goals. These likelihoods may be derived by considering the Commission goal that there should be no accidental criticalities at any regulated facility.

As an example, the value of 10^{-5} per year per accident in a facility with 100 potential accident sequences (Consequence Category 3) would yield a cumulative frequency for Consequence Category 3 accidents of:

$$100 \text{ accidents} \times 10^{-5} \text{ per year per accident} = 10^{-3} \text{ per year.} \qquad \text{(Eq. A-0)}$$

These Category 3 accidents generally result in fatalities. The average statistic for all manufacturing industries is that a facility with 250 manufacturing workers would expect 10^{-2} on-the-job deaths per year (see Census Bureau (U.S.), "Statistical Abstract of the United States," Table No. 716, 1999). The number of 10^{-3} per year is consistent with the Commission goal that there should be no accidental criticalities at regulated facilities. With approximately 10 regulated facilities in the United States, this should ensure that the likelihood of an accidental criticality anywhere in the country is no greater than 10^{-2}. A recurrence period of 100 years is sufficient to provide reasonable assurance that a criticality accident will not occur during the lifetime of any regulated facility.

Similarly, accident sequences having frequencies more than 4×10^{-4} per year per accident are considered "not unlikely" (assuming on the order of 100 accident sequences of this type in the industry). Again, this value should not be taken as a definitive criterion for acceptability. It is a guideline value to ensure consistency. It may need to be adjusted based on the numbers and severity of accidents. The rationale for the value 4×10^{-4} is that accidents of the corresponding severity, Consequence Category 2, are not common and should remain so. This is based on a Commission strategic goal, that there should be no increase in reportable radiation releases, as

discussed in SRP Section 5.4.3.2(B)(ix). To achieve this, the product of this frequency per accident per year with the assessed number of potential accidents should provide adequate confidence that such accidents will not occur. Note again that these values of 10^{-5} and $4x10^{-4}$ are per year per accident.

The accident evaluation method described below does not preclude the need to comply with the double contingency principle for sequences leading to criticality. Although exceptions are permitted with compensatory measures, double contingency, should be applied. The reason double contingency is needed is the fact that there is usually insufficient firm data as to the reliability of the control equipment and administrative control procedures used in criticality safety. If only one item were relied on to prevent a criticality and it proved to be less reliable than expected, then the first time it failed, a criticality accident could result. For this reason, it is prudent to require two independent controls. Inadequate controls can then be determined by observing their failure, without also suffering the consequence of a criticality. Even with double contingency, it is essential that each of the items relied on for safety (IROFS) be sufficiently unlikely to fail, so if one of the two items that establish double contingency is actually ineffective, criticality will still not be likely.

A4. RISK INDEX EVALUATION SUMMARY

As mentioned in Section A3, an acceptable way for the applicant to present the results of the ISA is a tabular summary of the identified accident sequences. Table A–9 is an acceptable format for such a table. This table lists several example accident sequences for a powder blender at a mixed oxide (MOX) facility. Table A–9 summarizes two sets of information: (1) the accident sequences identified in the ISA and (2) a risk index calculated for each sequence to show compliance with the regulation.

A fault tree is another acceptable method of presenting the results. As shown by the example, for the purposes of documenting compliance with the double contingency principle, a fault tree provides a fuller description of the control systems, and the logical progression of the accident, than a tabular format can, and is thus considered the preferred method. Both of these methods will be presented in the tables that follow.

Accident sequences result from initiating events, followed by failure of one or more controls. Thus, there are columns in Table A–9 for the initiating event and for controls that may be mitigative or preventive. In most cases, the initiating event will be the failure of one of the preventive controls. There may also be accident sequences resulting from external events such as fires or earthquakes.

With redundant safety controls, and in certain other cases, there are sequences where an initiating event occurs that places the system in a vulnerable state. While the system is in this vulnerable state, a safety control must fail for the accident to result. Thus, the frequency of the accident depends on the frequency of the first event, the duration of vulnerability, and the frequency of the (second) control failure. For this reason, it is necessary to consider the duration of the vulnerable state and to assign it a duration index. The values of all index numbers for a sequence are added to obtain a total likelihood index, T. Sequences are then

assigned to one of the three likelihood categories of the Risk Matrix depending on the value of this index in accordance with Table A–3.

Table A–3: Determination of Likelihood Category

LIKELIHOOD CATEGORY	LIKELIHOOD INDEX T (= sum of index numbers)
1	$T \leq -5$
2	$-5 < T \leq -4$
3	$-4 < T$

The likelihood category in Table A–3 applies to the accident sequence of a whole and is used to assess the overall likelihood of the sequence, not the likelihood of individual controls used in meeting double contingency.

The values of index numbers in sequences are assigned considering the criteria in Tables A–4 through A–6. Each table applies to a different type of event. Table A–4 applies to events that have frequencies of occurrence, such as initiating events and certain control failures. When failure probabilities are required for the event, Table A–5 provides the index values. Table A–6 provides index numbers for durations of failure. These are used in certain accident sequences where two controls must simultaneously be in a failed state. In this case, one of the two controlled parameters will fail first. It is then necessary to consider the duration that the system remains susceptible to failure of the second. The reverse sequence, where the second control fails first, should also be considered as a separate accident sequence. (Since the example chosen mainly concerns criticality safety, the failure of each control relied on to meet the double contingency principle must be considered as the initiating event of an accident sequence.) This is necessary because the duration of failure of the second control will usually differ from that of the first. The values of these duration indices are not merely judgmental. They are directly related to the time interval of surveillance monitoring for failures. That is, the duration of a failure is the time until it is detected plus the time to restore the system to a state in which it is not vulnerable to the second failure.

If the probability of failure for the first preventive control is P_1 (in units of events per year), its duration of failure is d_1 (in years), and the probability and duration of failure of the second control is P_2 and d_2, then P_1P_2 is the probability that both controls will fail within the year. The probability that both controls will be in a failed state simultaneously is $P_1P_2(d_1+d_2)$. The two terms $P_1P_2d_1$ and $P_1P_2d_2$ correspond to the direct and reverse accident sequences (that is, where Control 1 fails first followed by Control 2, and vice versa). Given that the first event has occurred (with probability P_1), the probability that the second control will fail while the first control is in a failed state is P_2d_1, assuming the two events are truly independent. Although this is a simplistic model, using an approximate constant failure and repair period (P_1^{-1} and d_1), rather than a realistic distribution, this gives a reasonable estimate of the long-term failure probability of the combined control system. The applicant may also use more sophisticated and

rigorous reliability models to determine these quantities. Thus, we see that taking the duration index into account can produce a substantial reduction in the overall likelihood of the accident sequence.

For all these index numbers, the more negative the number is, the less likely the failure. Accident sequences may consist of varying numbers of events, starting with an initiating event. The total likelihood index is the sum of the indices for all the events in the sequence, including those for duration.

Consequences are assigned to one of the three consequence categories of the Risk Matrix based on calculations or estimates of the actual consequences of the accident sequence (see Table A–1). Multiple types of consequences can result from the same event. The consequence category for an event is chosen for the most severe consequence.

As shown in the first row of Table A–9, the failure duration index can make a large contribution to the total likelihood index. Therefore, the reviewer should verify that there is adequate justification that the failure will be corrected in the time ascribed to the duration index. In general, duration indices with values less than minus one (-1), corresponding to 36 days (about 1 month), to be acceptable, should be based on the intentional monitoring frequency of the process. The failure duration for an unmonitored process will typically be more difficult to determine; the duration should be estimated with sufficient conservatism to fully account for the uncertainty in the duration (the time needed to notice and correct the event).

Table A–7 provides a more detailed description of the accident sequences used in the example of Table A–9. The reviewer needs the information in Table A–7 to understand the nature of the accident sequences listed in Table A–9. Table A–9 lacks sufficient room to explain any but the simplest failure events.

Table A–8 is used to explain the safety controls and external initiating events that appear in the accident sequences in Table A–9. The reviewer needs the information in Table A–8 to understand why the initiating events and safety controls listed in Table A–9 have the low likelihood indices assigned. Thus, Table A–8 needs to address such information as the margins to safety limits, the redundancy of a control, and the measures taken to assure adequate reliability of a control. Table A–8 must also justify why those external events, which are not obviously extremely unlikely, have the low likelihoods that are being relied on for safety. The applicant should provide *separate* tables to list the controls for criticality, chemical, fire, radiological, and environmental accidents.

Table A–4: Failure Frequency Index Numbers

FREQUENCY INDEX NUMBER	BASED ON EVIDENCE	BASED ON TYPE OF CONTROL**	COMMENTS
-6*	External event with frequency < 10^{-6} per yr		If initiating event, no controls needed
-4*	No failures in 30 years for hundreds of similar controls in industry	Exceptionally robust passive engineered control (PEC), or an inherently safe process, or two independent active engineered controls (AECs), PEC, or enhanced administrative controls	Rarely justified by evidence, since few systems are found in such large numbers. Further, most types of single control have been observed to fail.
-3*	No failures in 30 years for tens of similar controls in industry	A single control with redundant parts, each a PEC or AEC	
-2*	No failure of this type in this facility in 30 years	A single PEC	
-1	A few failures may occur during facility lifetime	A single AEC, an enhanced administrative control, an administrative control with large margin, or a redundant administrative control	
0	Failures occur every 1-3 years	A single administrative control	
1	Several occurrences per year	A frequent event	Not for safety controls, just initiating events
2	Occurs every week or more often	Frequent event, an inadequate control	Not for safety controls, just initiating events

* Numbers less than (more negative than) -1 should not be assigned to controls unless the configuration management, auditing, and other management measures are of high quality, because without these measures, the controls may be changed or not maintained.
** The failure frequency index assigned to a control of a given type in column three may be one value higher or lower than the value given in column one, since the reliability of different types of controls can vary widely. Criteria justifying assignment of the lower (more negative) failure frequency index should be given in the narrative describing ISA methods. Exceptions should be individually justified.

Table A–5: Failure Probability Index Numbers

PROBABILITY INDEX NUMBER	PROBABILITY OF FAILURE ON DEMAND	BASED ON TYPE OF CONTROL	COMMENTS
-6*	10^{-6}		If initiating event, no controls needed
-4 or -5*	10^{-4}–10^{-5}	Exceptionally robust PEC or an inherently safe process, or two redundant controls better than simple administrative controls (AEC, PEC, or enhanced administrative)	Rarely can be justified by evidence, since few systems are found in such large numbers. Further, most types of single controls have been observed to fail.
-3 or -4*	10^{-3}–10^{-4}	A single PEC or an AEC with high availability	
-2 or -3*	10^{-2}–10^{-3}	A single AEC, an enhanced administrative control, or an administrative control for routine planned operations	
-1 or -2	10^{-1}–10^{-2}	An administrative control that must be performed in response to a rare, unplanned demand	

* Probability index numbers less than (more negative than) -1 should not be assigned to controls unless the configuration management, auditing, and other management measures are of high quality because without these measures, the controls may be changed or not maintained.

Figure A–2 presents the same information as a set of fault tree diagrams. A discussion and comparison of the two methods follows the example.

Definitions and explanations of the terms used in the following tables and figures will follow the example.

As an understanding of the example systems is important, process descriptions for hypothetical MOX processes follow. These hypothetical systems were chosen because of their relatively high degree of importance for nuclear criticality and because they represent the extremes in terms of operational and control complexity. The first example, the solvent extraction system, is a complex chemical operation that is most amenable to a fault tree presentation of the results of the ISA Summary (though to compare the strengths and weaknesses of the two methods, both fault trees and a tabular format are presented). The second example, MOX blending, is much more straightforward in terms of controls and the results of the ISA can be summarized more effectively in terms of a table of accident sequences.

These examples should only be considered typical of the degree of information required and the ways in which it may be displayed. It is anticipated that the applicant's ISA Summary and process description may differ markedly from the example. These examples should not be construed to preclude other methods of presenting the ISA Summary results.

A5. OVERALL PROCESS DESCRIPTION

The purpose of the front-end plutonium purification process (P^3) is to remove impurities such as gallium and americium from the plutonium oxide feed, producing a more suitable plutonium feed stream for the oxide blending process. This process description is for illustrative purposes only and should not be expected to conform to any particular applicant's process. The actual license application would require a more detailed process description than that presented below, but the following brief summary is presented to aid in understanding the example:

Raw plutonium oxide (PuO_2) powder is received from the shipper and batched into a glovebox at the front end of the Aqueous Polishing (AP) processing line. The containers of PuO_2 are fed into an electrically-heated dissolver unit in the glovebox, consisting of a favorable geometry recirculation loop with electrodes at either end. The PuO_2 is digested by the addition of nitric acid in the presence of Ag^{++} ions, resulting in the formation of an impure plutonium nitrate ($Pu(NO_3)_4$) solution at a concentration of ~250 gPu/l. Plutonium can exist in several oxidation states in nitric solutions simultaneously, which complicates the process chemistry considerably. Although the plutonium in PuO_2 is tetravalent (Pu(IV)), it undergoes disproportionation, or self-oxidation and reduction, to both Pu(III) and Pu(VI) through the reaction

$$3Pu^{4+}\ (IV) + 2H_2O = 2Pu^{3+}\ (III) + PuO_2^{2+}\ (VI) + 4H^+ \qquad \text{(Eq. A–1)}$$

Table A–6: Failure Duration Index Numbers

DURATION INDEX NUMBER	AVG. FAILURE DURATION	DURATION IN YEARS	COMMENTS
-5	5 minutes	10^{-5}	
-4	1 hour	10^{-4}	
-3	8 hours	0.001	
-2	A few days	0.01	
-1	1 month	0.1	Formal monitoring to justify indices less than -1
0	1 year	1	
1	More than 3 years	10	

The plutonium must be adjusted to the tetravalent state to ensure effective extraction. This is done as a two-step process. First, Ag^{++} is generated at the cathode and acts as an oxidation agent to drive both Pu(III) and Pu(IV) to Pu(VI). Tetravalent plutonium is oxidized through the reaction $Pu(IV) + Ag^{++} = Pu(VI) + Ag$.

After the operators determine that complete PuO_2 dissolution is achieved by means of independent dual sampling, the $Pu(NO_3)_4$ is fed through a favorable geometry inline filter into the solvent extraction feed preparation slab tank. (*N.B.* Plutonium in $Pu(NO_3)_4$ is actually in the tetravalent state; the chemical form after oxidation is more accurately characterized as a mixture of Pu(VI) cations in a NO_3^- -rich solution.) The free Pu(VI), or PuO_2^{+2} plutonyl ions, must be adjusted from the hexavalent to the tetravalent state Pu(IV) by the addition of excess HNO_3 and H_2O_2 (a reducing agent) at a low plutonium concentration. This is done in the favorable geometry preparation tank. The entire aqueous polishing process is conducted on a batch basis, with approximately 14 kg (30.8 lb) Pu processed through dissolution, solvent extraction, precipitation, and calcination in each batch. The powder is then mixed together with natural uranium oxide to form the master blend.

A6. SOLVENT EXTRACTION PROCESS (PLUTONIUM PURIFICATION)

The solvent extraction, scrub, and strip columns consist of identical long (~20 feet [6.1 m]), 5-inch (12.7 cm) diameter Pyrex columns containing a series of stationary perforated plates. For solvent extraction, the aqueous $Pu(NO_3)_4$ solution is added at the top of the column and a mixture of TBP, or tributyl phosphate (chemical formula $(C_4H_9)_3PO_4$), and a diluent (30 percent hydrogenated tetrapropylene, or HTP) is added at the bottom of the column. The difference between the relative specific gravities of the two streams causes the aqueous solution to sink to the bottom and the organic mixture to rise to the top of the column. The immiscible fluids are pulsed in the columns by means of positive-displacement pumps. This pulsing breaks up the interface between the fluids and increases the surface area, resulting in intimate mixing to increase the efficiency of extraction. The tetravalent plutonium ion Pu^{4+} becomes complexed to the organic through the reaction.

$$Pu^{4+}(aq) + 4NO_3^-(aq) + 2TBP(o) = Pu(NO_3)_4 \cdot 2TBP(o) \qquad \text{(Eq. A–2)}$$

The existence of a salting agent such as HNO_3 or $Al(NO_3)_3$ increases the acid molarity of the excess nitric ion and causes the above reaction to be shifted to the right.

In the scrub column, the fissile-bearing organic stream from the top of the solvent extraction column is fed into the bottom of the scrub column. Additional nitric acid is added to the top of the scrub column and the same countercurrent operation repeated to remove additional impurities from the organic into the aqueous phase. The plutonium remains in the organic phase at the end of the scrub operation. The aqueous raffinate stream—which should now contain low levels of plutonium but concentrated fission products—is transferred to raffinate storage while the fissile-bearing organic stream is fed into the bottom of the strip column.

In the strip column, de-ionized water is added to reduce the acid molarity, causing the left-hand side of equation A–2 to be favored. The aqueous product stream containing purified plutonium

nitrate is then transferred to the first-pass evaporator; the spent organic phase must be reconditioned for reuse in the first-pass solvent extraction. The evaporator consists of a tube-and-shell heat exchanger in which the concentration of the $Pu(NO_3)_4$ increases from 40 gPu/l to approximately 250 gPu/l. The second- and third-pass solvent extraction lines are nearly identical to the first, except that the $Pu(NO_3)_4$ is at a higher concentration.

Raffinate and solvent conditioning streams attach to the process at various points. The first-, second-, and third-pass raffinate streams are transferred to a bank of favorable geometry columns (from the extraction and scrub columns, solvent regeneration, and evaporator condensate), where they are sampled (by dual independent sampling) for Pu content. Only after they meet the release criteria of 0.015 gPu/l are the contents discharged (through an inline monitor that is interlocked to the waste tank isolation valves) to a set of unfavorable geometry wastewater tanks for wastewater treatment and eventual discharge from the site. In addition, organic solvent from the strip columns must be regenerated because it contains a buildup of metallic impurities (primarily gallium and americium), nitric acid (acquired through the reaction $H^+(aq) + NO_3^-(aq) + 2TBP(o) \rightleftharpoons HNO_3{\cdot}TBP(o)$), and various radiolytic decomposition products of TBP and kerosene, such as dibutyl phosphate (DBP). The solvent is washed with Na_2CO_3, NaOH, and HNO_3 in a series of favorable geometry mixer/settlers (M/Ss) to remove impurities, filtered, and recycled to the solvent extraction columns. Gallium and americium are further removed by electrolytic deposition on charged plates in the M/S units. Makeup solvent from bulk chemical tanks is added as needed to maintain the solvent inventory. The M/Ss consist of a safe geometry box partitioned by a short wall into a mixing chamber and a settling chamber. The mixing chamber contains a rotary impeller that draws the heavier liquid (aqueous wash solution) from the bottom of the mixing chamber and emulsifies it into the lighter liquid (organic solvent) in the top of the mixing chamber. Following this intimate mixing (which operates under the same principle as the pulsed extraction columns), the solution gravity drains into the settling chamber, where it separates into two distinct layers. The organic is drawn off to the next wash stage or to the fresh solvent column, while the aqueous is discharged to the raffinate storage columns.

Following third-pass solvent extraction, the purified $Pu(NO_3)_4$ must be reconverted to PuO_2 for blending with UO_2. This is accomplished by the addition of oxalic acid ($H_2C_2O_4$) to cause the precipitation of plutonium as plutonium oxalate ($Pu(C_2O_4)_2$). Hydrogen peroxide (H_2O_2) is added to the plutonium nitrate solution to ensure that it is in the proper oxidation state. After sampling, the solution is transferred to the precipitation column, a short 4-inch (10.2 cm) diameter glass column contained within a glovebox, in which the plutonium oxalate is prepared. Precipitation proceeds through the reaction.

$$Pu(IV)(NO_3)_4 + 2H_2C_2O_4 \rightleftharpoons Pu(C_2O_4)_2 + 4HNO_3 \qquad \text{(Eq. A–3)}$$

The resulting precipitate is prepared through the slow addition of oxalic acid to the column, and is thixotropic in nature. The nitric acid content must also be adjusted to obtain the desired level of consistency. The resultant plutonium oxalate slurry collects at the bottom of the column. The residual nitric-water solution contains only low levels of plutonium nitrate and is sampled for discharge. Solutions that contain greater than the release criteria of 0.015 gPu/l are recycled to solvent extraction for re-extraction. This dilute nitric solution is decanted and filtered before

transfer to acid recovery, and the material at the bottom of the bowl is drained out before being air-dried in the glovebox. When the material is dried, it forms a cake containing plutonium oxalate hydrates (such as $Pu(C_2O_4)_2 \cdot 6H_2O$). The material is gravity drained from the bottom of the precipitator, where it is automatically dropped through a chute into an inclined, rotary-kiln calciner in a continuous process. The slurry is then calcined in an electrically heated oxidation furnace at 300 °C and then converted to PuO_2 at 900 °C in an oxygen-rich atmosphere in the same furnace. The PuO_2 is collected into a moderation-controlled hopper, which is connected to a favorable geometry tumbling mixer to achieve proper homogenization. The mixer consists of two rotating drums with a spiral blade in the intervening space with a cadmium shaft for neutron poison. After homogenization, the material is transferred to a glovebox where it is sampled, bottled, and transferred to the mixed oxide blending operation of the MOX process (MP) line.

The overall process flow is shown in Figure A–1.

Controlled parameters in the solvent extraction process are geometry, concentration, spacing, interstitial moderation, and process variables (material form). The solvent extraction columns were modeled using an optimal plutonium nitrate concentration of 140 GPU/l, without taking credit for the presence of gallium—a mild neutron poison—or excess nitric acid. The solution was modeled to the outer diameter of the columns, and thus took credit for the diameter but not the column thickness. Credit was not taken for the plutonium isotonic (~4 wt% ^{240}Pu), as the models assume the feed consists solely of ^{239}Pu. Concentration was not controlled for the extraction columns, but was credited for keeping the waste tanks subclinical upon solution transfer from the refined storage columns.

Because the design relies primarily on passive engineered features (i.e., fixed geometry and spacing), the potential for nuclear criticality in the solvent extraction system itself is extremely unlikely. The main accidents of concern are transfer of concentrated solution to unfavorable geometry process equipment. As shown in Figure A–1, the unfavorable geometry systems that are connected to the process consist of (i) steam supply for the evaporators; (ii) deionize water, nitric acid, and solvent regeneration bulk chemical supply tanks; (iii) wastewater system tanks; and (iv) the floor.

The example shown in the following tables is for the second-pass solvent extraction (2SX) in the P^3 process node. The list of accident sequences and controls is for illustrative purposes only and is not meant to be exhaustive.

1. Process Criticality Flow Diagram

Figure A–1 is an example of one method of describing the process flow. A good understanding of the process flow and the criticality control systems that exist at each node in the process is essential to evaluating the results contained in the ISA Summary. The information contained in this process criticality flow diagram (PCFD) is a more condensed form of the information that would be expected in the process description, process flow diagrams (PFDs), and criticality safety evaluations. Presenting the information in this way is advantageous to the applicant, as it is a more

efficient means of providing needed process knowledge to the ISA or safety discipline reviewer. Basically, the PCFD is a PFD modified to contain the features relied on for criticality safety. Note several useful features of this diagram:

The different process steps are divided into two categories by shape, those relying on favorable geometry and those that are unfavorable geometry. Distinguishing between these two types of systems may be done by several other means. Geometry control is typically ranked as the most preferable control due to its inherent stability and robustness, and it is the primary control relied on in most of this particular system. In certain other systems, it may be somewhat more advantageous to draw a distinction between process steps that are moderation controlled and uncontrolled areas, or between concentration-controlled and uncontrolled areas. By reviewing this diagram, it is immediately apparent where the transition from favorable to unfavorable geometry takes place.

Another feature of this diagram is that the engineered features relied on for criticality safety are clearly identified by shading. There is a simple graphic representation of the barriers that exist between favorable and unfavorable geometry equipment, which are drawn as bars across the flow path between these systems. This makes readily apparent the features that prevent the backflow of concentrated fissile solution to unfavorable geometry equipment, among other scenarios. Adding the labels that correspond to each of the IROFS (as in Table A–8) would provide a ready cross-reference, but may result in too much added complexity for such a system.

The use of different line patterns to distinguish between the various streams—particularly with respect to different fissile compositions—facilitates understanding of the process flow. Another useful feature is the division of the entire diagram into different zones corresponding to various process nodes. This provides a clearer boundary definition and allows the reviewer to see how the system functions together as an integrated whole, including how perturbations in criticality controls in one process node or piece of equipment flow down into the next. The engineered controls tabulated in the ISA Summary (such as Table A–8) should include all features relied on for safety within the boundary of that process node. Finally, this diagram displays the actual controlled parameters at each process step; to the degree possible, this should be extended to display the actual controlled values of those parameters.

This diagram should be consulted in reviewing the sample tables.

Figure A-1: Criticality Flow Diagram for P 3 Operation

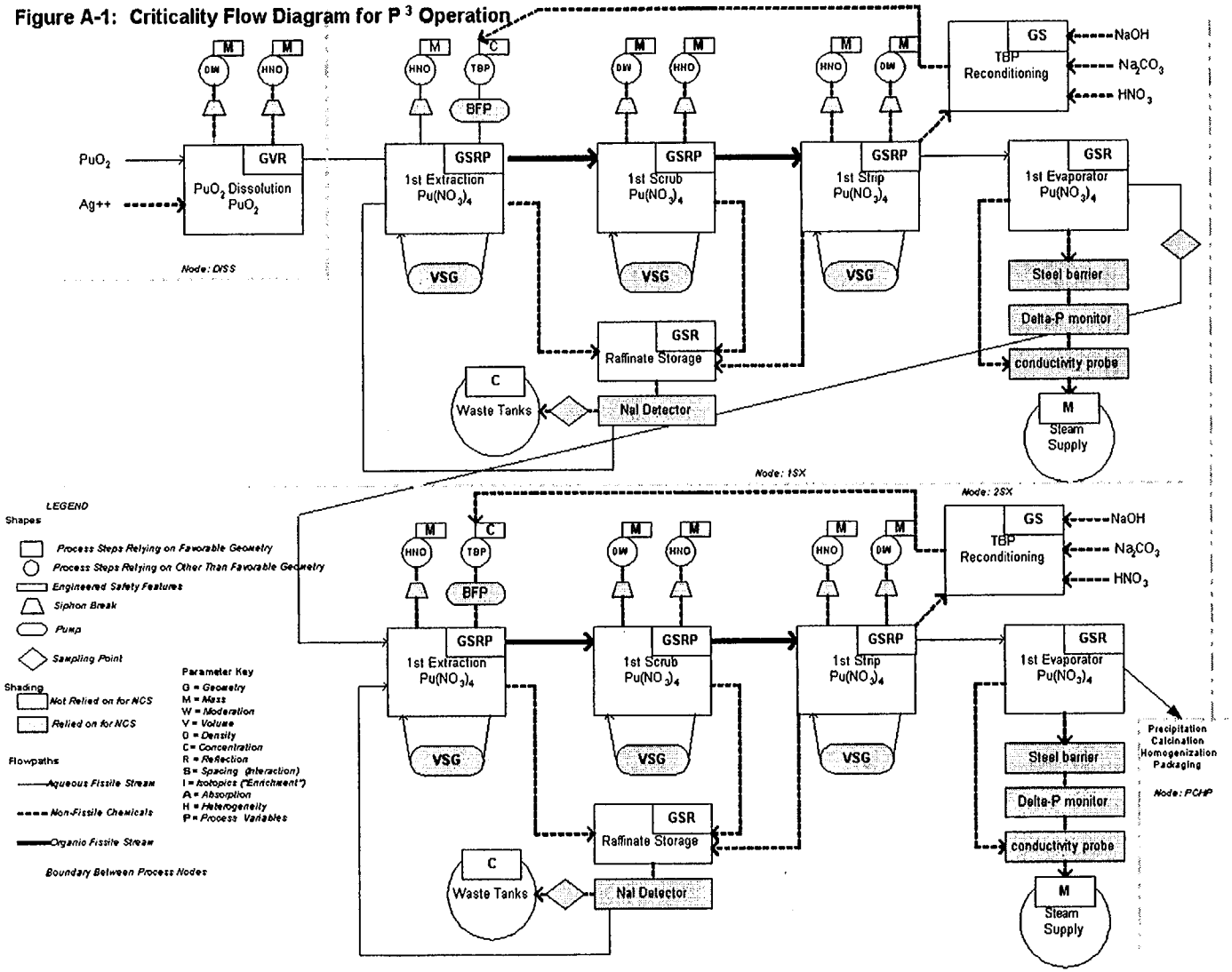

Table A–7: Accident Sequence Descriptions

Accident Sequence (see Table A–9)	DESCRIPTION
Loss of Geometry	
2SX–001	The initiating event is the leakage of concentrated plutonium nitrate solution through the safe geometry chamber of the column pulsing pumps into the oil reservoir, where it becomes moderated by oil. This cannot result in a criticality without failure of the oil reservoir level switch.
2SX–002	The initiating event is the leakage of concentrated plutonium nitrate solution through the shell side of the heat exchanger in the second-pass evaporator. Concentrated solution could ultimately reach the unfavorable geometry steam supply after multiple failures, leading to criticality.
2SX–003	The initiating event is the backflow of concentrated plutonium nitrate solution to the unfavorable geometry nitric acid supply, which could lead to criticality after multiple failures. The backflow could result from a leak of the heat exchanger through the tube side of the second-pass evaporator, from over-addition of de-ionized water or other reagents, from double batching of plutonium nitrate into the columns, or from vigorous chemical reactions within the columns.
2SX–004	The initiating event is the backflow of concentrated plutonium nitrate solution to the unfavorable geometry de-ionized water supply, which could lead to criticality after multiple failures. (See 2SX–003 for a discussion of possible backflow mechanisms.)
2SX–005	The initiating event is the failure to strip the plutonium from the spent organic solvent, resulting in the presence of concentrated plutonium in the solvent regeneration. Although this equipment is analyzed safe at optimal concentration, the initial upset, followed by backflow to the fresh solvent bulk chemical supply, could lead to criticality.
2SX–006	The initiating event is the failure of the solvent extraction columns, leading to buildup of concentrated plutonium nitrate solution on the process floor. This would have to be followed by collection in an unfavorable geometry container to lead to criticality.
Loss of Concentration	
2SX–007	The initiating event is the failure to extract the plutonium from the aqueous raffinate stream. Although the raffinate storage columns are analyzed safe at optimal concentration, the initial upset, followed by failure of the concentration controls, could lead to criticality due to transfer of concentrated solution to the wastewater tanks.
Loss of Spacing	
2SX–008	The initiating event is an earthquake, fire, or other catastrophic event causing two or more columns to come together through structural failure. This would have to be followed by complete flooding to achieve criticality.
2SX–009	The initiating event is that columns are installed closer together than that analyzed as safe. This would have to be followed by complete flooding to achieve criticality.

Accident Sequence (see Table A–9)	DESCRIPTION
2SX–10	The initiating event is the placement of a container with plutonium nitrate or oxide placed next to a column or pump filled with plutonium nitrate solution. This would have to be followed by complete flooding to achieve criticality.
Loss of Interstitial Moderation/Reflection	
2SX–11	The initiating event is the increase in reflection above nominal values. Optimal interstitial moderation is shown to be safe under normal conditions. However, certain upset conditions require limited interstitial moderation to demonstrate subcriticality.
Loss of Material Form	
2SX–12	The initiating event is the introduction of more reactive forms of plutonium in the solvent extraction process, through the intrusion of oil from the pulsed column pumps' oil reservoirs. As a single failure this would not lead to criticality. However, it could result in nuclear criticality if followed by loss of interstitial moderation control.
2SX–13	The initiating event is the introduction of more reactive forms of plutonium in the solvent extraction process through the addition of precipitating agents (such as oxalic acid) into the plutonium nitrate feed.
2SX–14	The initiating event is the introduction of more reactive forms of plutonium in the solvent extraction process through the backflow of precipitating agents from the precipitation columns.

2. Determination of Likelihood Category in Table A–3

The likelihood category is determined by calculating the likelihood index, T, then using this table. The term "T" is calculated as the sum of the indices for the events in the accident sequence.

3. Determination of Failure Frequency Index Numbers in Table A–4

Table A–4 is used to assign frequency index numbers to facility initiating events and control system failures as found in the columns of Table A–9. The term "failure" is understood to mean not merely failure of the control device or procedure, but also the violation of the safety limit by the process. Since the controls are designed to maintain the system within its safety limits, any violation of the safety limits would also involve violation of the associated controls. The converse, however, is not necessarily true. In the example in Table A–9, accident sequence 2SX–001 involves loss of volume control due to pump failure. If criticality is the concern, failure leading to a criticality does not occur unless an unsafe volume of uranium-oil mixture actually collects in the oil reservoir before the leak is stopped. Upon violation of the control, there is some finite likelihood that the safety limit on the associated controlled parameter will be exceeded, and this should be considered when estimating the overall probability that an accident sequence will actually lead to criticality. (In practice, there are often cases for which the probability distribution of parameter values upon failure of the control is not well known, and the likelihood of the failure is then often conservatively assumed to be equivalent to the likelihood of the control failure.) This credit should be based on hard process data. In assessing the frequency index, this factor should be considered because many control failures do not cause safety limits to be exceeded. For radiological consequences, any amount leaked may cause exposure.

Table A–4 provides two columns with two sets of criteria for assigning an index value, one based on type of control, the other based directly on observed failure frequencies. The types of controls are administrative, active engineered, passive engineered, etc. Since controls of a given type have a wide range of failure frequencies, assignment of index values based on this table should be done with caution. Due consideration should be given to whether the control will actually achieve the corresponding failure frequency in the next column. Based on operational experience, more refined criteria for judging failure frequencies may be developed by an individual applicant. In the column labeled "Based on Type of Control," references to redundancy allow for controls that may themselves have internal redundancy to achieve a necessary level of reliability.

Another objective basis for assignment of an index value is actual observations of failure events. These actual events may have occurred in a comparable process elsewhere or in the licensed facility. Justification for specific assignments may be noted in the Comments column of Table A–9.

As previously noted, the definition of failure of a safety control to be used in assigning indices is, for nonredundant controls, a failure severe enough to cause an accident with consequences. For redundant controls, it is a failure such that, if no credit is taken for functionality of the other control, an accident with consequences would result. If most control malfunctions would qualify as such failures, then the index assignments of this table are appropriate. If true failure is substantially less frequent, then credit should be taken and adequate justification provided.

Note that indices less than (more negative than) -1 should not be assigned to controls unless the configuration management, auditing, and other required management measures are of high quality because, without these measures, the controls may be changed or inadequately maintained. The reviewer should be able to determine this from a tabular summary of safety controls provided in the application. This summary should include identification of the process parameters to be controlled and their safety limits and a thorough description of the control and its applied management measures.

4. Determination of Failure Probability Index Numbers in Table A–5

Occasionally, information concerning the reliability of a safety control may be available as a probability on demand. That is, a history may exist of tests or incidents during which the system in question is demanded to function. To quantify such accident sequences, the applicant must know the demand frequency, the initiating event, and the demand failure probability of the safety control. This table provides an assignment of index numbers for such controls in a way that is consistent with Table A–4. The probability of failure on demand may be the likelihood that it is in a failed state when demanded (availability), or that it fails to remain functional for a sufficient time to complete its mission.

5. Determination of Failure Duration Index Numbers in Table A–6

The failure duration index is important because of reasons discussed above. It represents the window of opportunity after failure of the first preventive control, during which the failure of the second could lead to adverse consequences. Cases in which the loss of the first control may remain undetected for long periods of time (such as leakage of hidden or baffled piping when credited as primary containment, or failure of items tested only when challenged) will typically not credit the failure duration in reducing the probability of the accident scenario. In this case, the duration index *D* should be taken as 0. Duration indices of less than -1 should be based on periodic surveillance and/or maintenance periods, or the fact that failure would be readily apparent within a certain time frame. For example, a failure duration index of -2 would be based on the fact that a weekly surveillance requirement has been established for that item. A failure duration index of -3 may be based on a requirement to perform a certain measurement once per shift, or the fact that failure would immediately reveal itself to operators who are required to be continually present.

Table A–8: Criticality Safety Limits and Controls

IROFS for the Second-Pass Solvent Extraction system

IROFS Identifier*	Parameters and Limits**	IROFS Description	Management Measures***	QA Grade****
2SX–PE1	VOLUME: < 4.5 l (1.2 gal)	SX Pump PMPX–001 has a safe volume chamber.	Configuration control	B
2SX–AE1	GEOMETRY: < 7.6 cm (3") depth	SX Pump PMPX–001 has an active level switch on the oil reservoir, which automatically shuts the recirculation valve and sounds an audible alarm in the control room if the slab depth is exceeded.	1. Configuration control 2. Control room constantly monitored 3. Biweekly functional check	A
2SX–AE2	PROCESS VAR: ΔP < 0.34 atm (5 psi)	Pressure differential gauge on heat exchanger HX–001 is set to alarm if P_{tube} - P_{shell} < 0.34 atm (5 psi).	1. Configuration control 2. Control room constantly monitored 3. Functional check each shift	A
2SX–AE3	PROCESS VAR: not applicable.	Conductivity probe on heat exchanger shell side to detect intrusion of plutonium. Setpoint will be sufficient to detect a concentration of 0.1 gPu/l.	1. Configuration control 2. Functional test weekly	A
2SX–ADM1	PROCESS VAR: ΔP < -0.34 atm (-5psi)	Procedures require operator response to differential pressure gauge alarm.	1. SOP 5349 2. Training/postings	B
2SX–PE2	MASS: 0 mass in nitric acid supply	Siphon break installed in nitric acid supply line.	1. Configuration control	C
2SX–ADM2	MASS: 0 mass in nitric acid supply	Utility (in this case, nitric acid) supply gauges are continually monitored in the control room whenever fissionable material is being processed. Facility procedures require shutdown when utility pressure lost.	1. SOP 9483 2. Training/postings	B
2SX–PE3	MASS: 0 mass in DIW supply	Siphon break installed on Deionize Water (DIW) line.	1. Configuration control	C
2SX-ADM3	MASS: 0 mass in DIW supply	Utility (in this case, DIW) supply gauges are continually monitored in the control room whenever fissionable material is being processed. Facility procedures require shut down when utility pressure lost.	1. SOP 6879 2. Training/postings	A
2SX-ADM4	PROCESS VAR: Acid molarity≤0.05.	Acid molarity is adjusted to ≤0.1M in the strip column. This ensures the plutonium will be stripped back into the aqueous phase.	1. SOP 0292 2. Training/postings	A

IROFS Identifier*	Parameters and Limits**	IROFS Description	Management Measures***	QA Grade****
2SX–ADM5	CONCENTR: < 0.1 gPu/l in the solvent regeneration columns	Procedures require weekly check of solvent regeneration columns by dual independent sampling. In addition, at the start of each batch, a checklist requires operators to visually check the columns for observed plutonium intrusion (greenish color).	1. SOP1929 2. Training/postings 3. QA Lab procedure ensures independent	B
2SX–PE4	MASS: 0 mass in bulk chemical supply	Backflow preventer (BFP) installed on bulk chemical and DIW lines to prevent backflow to organic solvent supply tanks.	1. Configuration control 2. Annual surveillance	B
2SX–PE5	GEOMETRY: diam < 10.2 cm (4")	Columns must be composed of no greater than 10.2 cm (4") diameter glass (extraction, scrub, strip, and precipitation).	1. Configuration control	C
2SX–PE6	GEOMETRY: depth < 5.2 cm (2") Area > 4.65 m^2 (50 ft^2)	Catch pans beneath columns must be no more than 5.2 cm (2") deep. In addition, they must have an area of 4.65 m^2 (50 ft^2) or more to ensure that they are capable of handling the largest spill from the columns.	1. Configuration control	C
2SX–PE7	SPACING: columns > 61 cm (24") center-to-center (c-to-c)	Drawings require columns be installed no more than 61 cm (24") c-to-c.	1. Configuration control	C
2SX–ADM6	MODERATION: water not allowed in fighting fires	Facility emergency response procedures prohibit the use of water in fighting fires in the solvent extraction area when plutonium is being processed. There is no automatic sprinkler system in this area. Foams and fogging agents may be used.	1. Emergency Plan. 2. Training/postings. 3. Annual drill. 4. Configuration control.	C
2SX–PE8	MODERATION: no overhead lines in SX area	Overhead water lines are prohibited in the solvent extraction area.	1. Configuration control.	C
2SX–PE9	GEOMETRY: width < 7.6 cm (3")	Width of the solvent regeneration M/Ss must be less than 7.6 cm (3").	1. Configuration control.	C
2SX–PE10	GEOMETRY: diameter < 7.6 cm (3")	Diameter of the floor drains must be less than 7.6 cm (3").	1. Configuration control.	C
2SX–PE11	GEOMETRY: depth < 2.54 cm (1")	Floor must be sloped to drain into the favorable geometry floor drains; variation in floor level must not allow solution more than 2.54 cm (1") deep to accumulate.	1. Configuration control. 2. Annual audit.	C
2SX–AE4	CONCEPT: < 0.015 gPu/l	Inline monitor interlocked to isolation valve to terminate feed if concentration exceeds limit. Safety grade items are the monitor, the interlock electronics, and the isolation valve.	1. Weekly calibration and functional source check. 2. Configuration control.	A

IROFS Identifier*	Parameters and Limits**	IROFS Description	Management Measures***	QA Grade****
2SX-ADM7	CONCEPT: < 0.015 gPu/l	Dual independent samples must be drawn and confirmed before transfer of refined to the wastewater tanks is permitted. The results of sampling must be reviewed by the operator and a supervisor (who maintains control of the key to the valve lock).	1. SOP 9045 2. QA Lab procedure 3. Training/postings	A
2SX–PE12	SPACING: columns > 61 cm (24") c-to-c	Structural supports must be designed to withstand credible loads with a safety factor ≥ 2. Must be designed to withstand seismic loads >0.1g.	1. Prestart-up load testing. 2. Configuration control.	C
2SX–ADM8	CONCEPT: < 0.015 gPu/l	Acid molarity is adjusted to approximately 3M (via grab sample) in the strip column to ensure Pu separation. PH may be used as a secondary measurement. Needed to keep refined concentration at a sufficiently low level.	1. SOP 3934 2. Lab QA procedure	B
2SX–ADM9	CONCEPT: < 0.015 gPu/l	Concentration in second pass extraction limited to 350 gPu/l. Along with 2SX–ADM8, needed to ensure extraction efficiency to keep refined concentration sufficiently low.	1. SOP 0945 2. Lab QA procedure	B
2SX–ADM10	SPACING: containers > 30.5 cm (12") from columns	Facility procedures require that fissile material containers and portable equipment be maintained at least 30.5 cm (12") from columns and pumps. Reinforced by postings and blue lines painted on floor (Limited Movement Areas).	1. Supervisor walk-through during each shift. 2. Facility directive 07. 3. Training/postings.	C
2SX–ADM11	MATERIAL FORM: oil < 4 l (1.1 gal)	The amount of oil in the oil reservoir of any pump shall be limited to 4 l (1.1 gal). This limits the concentration of hydrogenous moderators other than water to ensure subclinical calculations are bounding.	1. Configuration control.	C
2SX–ADM12	MATATERIAL FORM: no precipitating agents	Lids to bulk chemical supply tanks must be locked and controlled by supervisors, to ensure against the inadvertent addition of precipitating agents. Addition of all reagents must be certified by a facility chemical engineer prior to fissionable material processing.	1. Facility directive 29. 2. Training/postings.	C
2SX–PE13	MATATERIAL FORM: no precipitating agents	BFP installed on the line connecting the precipitation columns and the second pass evaporator. This prevents the backflow of oxalic acid into the SX operation.	1. Configuration control. 2. Annual surveill.	B

* IROFS Identifier: cross-referenced with Preventive Controls in Table A–9.
** Parameters and Limits: describe actual parameter limits, and all attributes of the IROFS that are important to criticality safety.
*** Management Measures: These are the measures needed to ensure IROFS availability and reliability.
**** QA Grade: This is optional; all controls may be classified as Grade A. If there is a graded QA Program, this signifies not the relative safety significance of the control, but the degree of management attention needed once the item is installed to ensure its availability and reliability (e.g., the siphon break is Grade C, not because its failure is of minor NCS significance, but because once installed it requires essentially no maintenance.)

Note: Engineered features such as alarms and instrumentation needed to trigger an administrative response should be categorized as separate IROFS from the administrative controls; these design features are required to be maintained as IROFS.

6. Determining Management Measures for Safety Controls

Table A–8 is an acceptable way of listing those IROFS in all the accident sequences leading to consequences that do not comply with the performance requirements. The IROFS listed should include all safety controls and all external events whose low likelihood is relied on to meet the performance requirements of 10 CFR 70.61. Staff reviews this list to determine whether measures have been applied to each safety control adequate to ensure their continual availability and reliability in conformance to 10 CFR 70.62(d). The types of management measures include maintenance, training, configuration management, audits and assessments, quality assurance, etc. These management measures are indicated in the Baseline Design Criteria (BDC) and described in greater detail in SRP Chapters 6.0 through 12.0 and 15.0. Safety controls meeting all the provisions of these chapters have acceptable management measures, that is, they comply with § 70.62(d). Safety controls may, with justification, have lesser management measures than those described. However, every item relied on for safety in accident sequences leading to consequence categories 2 or 3 should be assigned at least a minimal set of management measures. Specifically, to defend against common mode failure of all controls on a process, this minimal set of measures must include an adequate degree of: (a) configuration management; (b) regular auditing for the continued effectiveness of the control; (c) adequate labeling, training, or written procedures to assure the awareness of the operating staff of the safety function performed; (d) surveillance and corrective maintenance; and (e) preventive maintenance, if applicable.

If lesser or graded management measures are applied to some controls, Tables A–8 and A–9 and the narratives preceding them, to be acceptable, must identify to which controls these lesser measures are applied. In addition, information indicating that acceptable reliability can be achieved with these lesser measures must be presented. It is not necessary that the specifics of these measures, such as the surveillance interval, type of maintenance, or type of testing, be described as applied to each control. It is recognized that such specific measures must be applied differently to each control to whatever degree is necessary to achieve adequate reliability. It is the formality, documentation, and QA requirements applied to these direct management measures that may be graded generically in a risk-informed manner.

The following describes the application of management measures to IROFS based on the risk importance of the item in an accident sequence, as defined by (1) the risk index, and (2) the failure likelihood index, "T." In summary, items relied on to prevent or mitigate accidents with consequences in the two highest categories identified in § 70.61 should satisfy the applicable BDC of § 70.64.

For each of the accident sequences evaluated in Table A–9 as being in an acceptable risk category (a risk index of less than or equal to 4):

(1) If the initiating event is *not* a control failure, then management measures for that event are not necessary. For sequences claimed to be highly unlikely or unlikely, the assessment that the initiating event has such a low frequency must be adequately justified in the application.

(2) Regardless of the degree to which this initiating event is relied on in the accident sequence, for accident sequences resulting in nuclear criticality, double contingency should still be established. This requires at least one more IROFS in the accident sequence, in addition to the initiating event, that requires management measures to ensure compliance with the double contingency principle.

(3) If the initiating event *is* a control failure, management measures for that IROFS should be applied sufficient to maintain the claimed failure frequency. The selection of management measures should take into consideration the failure likelihood assumed in finding the accident sequence risk acceptable, as well as the inherent nature of the control.

[Basis: If the required failure frequency index for a control with management measures applied (assumed in the accident sequence) is comparable to the failure index without management measures, such as for rigid dimensions of equipment not susceptible to changing, a relatively low level of management measures may be warranted.]

(4) If the initiating event *is* a control failure, management measures may be graded less than the highest level depending on the importance of the control to the overall risk of the accident sequence.

[Basis: If the unavailability of the IROFS makes a negligible increase in the overall risk, then that IROFS has a relatively low importance in the accident sequence. Assigning weights to the various IROFS in terms of management measures may be done by comparing the overall risk with and without (mitigated versus unmitigated) that particular IROFS.]

7. Risk-Informed Review of Safety Controls

The staff reviews the safety controls and external events listed in Table A–8 in a risk-informed manner as described in Section 5.5. The procedure for identifying systems of safety controls having higher risk significance is described in Section 5.5. These controls will be subject to a more detailed review by staff to ensure their adequacy.

Table A–9: Example Accident Sequence Summary and Risk Index Assignment

Process: P^3 (Plutonium Purification Process) Node: 2SX (Second-Pass Solvent Extraction)

Accident Sequence	Initiating Event (a)	Preventive Control 1 (b)	Preventive Control 2 (c)	Likelihood* Index T and Category C (d)	Conse-quence Category (e)	Risk Indices (f = d x e)	Comments & Recommendations
2SX–001	Pump chamber leaks	2SX–PE1: Pump chamber is safe volume F1 = -1. Regular maintenance prevents frequent pump failure. D1 = -3. Pump failure would be detected by oil presence in the solution in clear glass columns. Process continually monitored by operators.	2SX–AE1: Level switch keeps oil level at safe slab depth. Automatically actuates isolation valve and alarms if level exceeded. F2 = -2. Regular maintenance ensures low failure rate. D2 = -2. Biweekly surveillance.	T = -5 C = 1	3	3	
2SX–002	Heat exchanger tube leaks	2SX–AE2: Differential gauge alarms if pressure differential across evaporator not maintained. F1 = -1. Regular maintenance ensures low failure rate. D1 = -3. Failure would be detected during one shift because concentration monitored frequently for QA.	2SX–ADM1: Operator required to respond to alarm if pressure differential lost. F2 = -2. Failure to evaporate would be noticed by operators on floor, and control room operator required by training and procedure to respond to alarm. Control room manned by two operators at all times. D2 = 0. Failure of this control may not be readily noted. Credit not taken.	T = -4 C = 2	3	6	This scenario requires other controls to ensure adequate low likelihood. Recommend installation of a drain line on the steam supply to prevent liquid accumulation.
2SX–003	Motive force causes potential backflow to nitric acid	2SX–PE2: Siphon break installed on supply line. F1 = -4. The most likely scenario is that the siphon break was never installed in the first place. There is a rigorous configuration control program for safety grade items. D1 = 0. All safety grade items audited annually to confirm their continued presence.	2SX–ADM2: Utility supply pressure not maintained above atmospheric. F2 = -2. Utilities used throughout facility for many different purposes. They are used frequently and so are tested on a continual basis. D2 = -2. Control room continually manned; these process variables are monitored constantly for QA purposes.	T = -5 C = 1	3	3	
2SX–004	Motive force causes potential backflow to DIW	2SX–PE3: Siphon break installed on supply line. see 2SX–003 for explanation.	2SX–ADM3: Utility supply pressure not maintained above atmospheric. see 2SX–003 for explanation.	T = -5 C = 1	3	3	

Accident Sequence	Initiating Event (a)	Preventive Control 1 (b)	Preventive Control 2 (c)	Likelihood* Index T and Category C (d)	Conse-quence Category (e)	Risk Indices (f = d x e)	Comments & Recommendations
2SX–005	Concentrated plutonium not stripped from organic	2SX–ADM4: Sufficient DIW added to ensure acid molarity low enough to guarantee stripping. Must be sampled and checked before stripping. 2SX–ADM5: Solvent regeneration columns M/Ss monitored weekly for uranium buildup. F1 = -2. Process variables (acid molarity and concentration) monitored shiftly and monitored continuously for QA purposes, ensuring their reliability D1 = -3. Major process upset would be noted by operators almost immediately.	2SX–PE4: BFP on organic bulk chemical supply line. F2 = -2. Regular maintenance ensures low failure rate. D2 = -2. Failure would be detected during weekly surveillance.	T = -8 C = 1	3	3	
2SX–006	Solution spills from column	2SX–PE5: Columns are favorable geometry glass. F1 = -1. Columns have capacity to break even though they are sealed within a steel scaffold; operational history shows that this is an infrequent occurrence. D1 = -3. Breakage would be readily apparent. The process floor is continually manned and good housekeeping practices are instituted.	2SX–PE6: Catch pans are safe slab and have sufficient area to hold the contents of more than two columns when filled to the maximum. F2 = -4. For this control to fail would require either improper installation, or the breakage of several columns. Configuration management reliability is judged to be -4. D2 = -3. See Control 1 explanation.	T = -7 C = 1	3	3	
...additional accident sequences would follow this...							
2SX–008	Earthquake occurs of sufficient strength to cause structural failure F = -5.	2SX–PE7: Columns separated at sufficient distance to ensure subcriticality. 2SX-PE5: Columns are favorable geometry. F1 = -3. If columns are subjected to extreme stresses they will tend to break rather than displace. Probability of displacing so that the columns would come to rest with their axes parallel is very low. D1 = -2. Several days is the longest that the condition would be likely to persist before control of the site was reestablished.	2SX–PE8: There are no water lines or other sources of water installed to burst in the event of an earthquake. F2 = -4. This is the standard frequency used elsewhere where a passive design feature that relies only on configuration management is used, when there are no other failure mechanisms. D2 = -2. The presence of water would be readily detected by responders following the earthquake.	T = -12 C = 1	3	3	This scenario takes credit for an external event. Site characteristics provide the likelihood of seismic activity and flood levels quoted.

* Likelihood index T is a sum. Uncontrolled: T=frqi or frq1; Controlled: includes all indices T=a+b+c+d

Note 1: For these sequences, the initiating event is failure of one of the controls, hence the frequency is assigned under that control.

The final results column of Table A–9 gives the risk index for each accident sequence that was identified in the ISA. The risk index will be used by staff to identify all risk significant sets of controls. These sets of controls will be reviewed with greater scrutiny than controls established to prevent or mitigate accident sequences of low risk.

8. Accident Summary and Risk Index Assignment for Table A–9

The definitions for the contents of each column in the accident summary tabulation, Table A–9, are provided below.

(1) Accident Sequence

This column is provided to list the accident sequences identified by the applicant in the ISA. It is important to the proper documentation of the ISA that the applicant subdivides the facility into a set of uniquely identified units, referred to here as "nodes." The applicant should give symbols, names, or numbers to these nodes that permit them to be uniquely identified. For example, the Plutonium Purification process described in Section A6 has the unique identifying symbol P^3. The specific node corresponding to second-pass solvent extraction has the unique identifier 2SX. Additional identifier characters have been added to form the identifier, 2SX–001, to identify the first accident sequence identified in that node. Because the applicant should list all the facility safety controls of significance used elsewhere in the ISA, tabulations of the unique node (and accident) identifiers can be used to find the accidents that these safety controls have been shown to prevent. By reviewing this table, the reviewer can then evaluate (1) the adequacy of the controls for preventing accidents and (2) the bases for making the consequence and likelihood assignments in the table.

(2) Initiating Event or Control Failure

This column is provided to list initiating events or control failures, typically identified in the process hazard analysis phase of the ISA, that may lead to consequences that do not comply with the performance requirements. Initiating events are of several distinct types: (1) external events such as hurricanes and earthquakes, (2) facility events external to the node being analyzed (e.g., fires, explosions, failures of other equipment, flooding from facility water sources), (3) deviations from normal of the process in the node (i.e., credible abnormal events), and (4) failures of safety controls of the node. The tabulated initiating events should consist only of those that involve an actual or threatened failure of safety controls, or that cause a demand requiring controls to function in order to prevent consequences that do not comply with the performance requirements. The frequency index number for initiating events is referred to in the table using the symbol "F." Table A–4 provides criteria for assigning a value to F. Usually, insufficient room is present in a tabular presentation like Table A–9 to describe accurately the events indicated. Consequently, the applicant should provide

supplementary narrative information to adequately describe each accident sequence of Table A–7. Cross-referencing between this information and the table should be adequate; for instance, the unique symbolic accident sequence identifiers can be used. Table A–7 is an example of a list of supplementary accident sequence descriptions corresponding to Table A–9.

(3) Preventive Control 1

This column is provided to list a control designed to prevent consequences that do not comply with the performance requirements. If separate controls are used to prevent different consequences, separate rows in the table should be defined corresponding to each type of consequence. Sequences in which two controls must simultaneously be in a failed state require assignment of three index numbers: the failure frequency of the first control, F_1, the duration of this failure, D_1, and the failure frequency of the second control, F_2. For such sequences, the initiating event is failure of the first control. In these cases, F_1 is assigned using Table A–4. The failure duration of the first control is assigned using Table A–6. Other sequences may be more easily described as a failure of the safety controls on demand after the occurrence of an initiating event. In these cases, the failure probability index number, prf1, is assigned using Table A–5. The symbol "b" is used in the column heading for the indices associated with this control.

(4) Preventive Control 2

This column is provided in case a second preventive control exists. The failure frequency or failure probability on demand is assigned as for Preventive Control 1. The symbol "c" is used in the column heading for the indices associated with this control.

In cases where no second preventive control exists (especially when the BDC requires double contingency), this column should contain a description of the consequences resulting from the first control failure. For example, there are generally two ways to demonstrate double contingency; either by i) specifying a second independent control that has to fail concurrently before criticality is credible, or ii) showing by calculation that the worst credible physical conditions resulting from the control failure remain subclinical. References identifying the consequence calculations that relate to the accident sequences should be included somewhere in the table, such as in column "c" or "e."

(5) Likelihood Category

This column is provided to list the likelihood category number for the risk matrix, which is based on the total likelihood index for a sequence. The total likelihood index, T, is the sum of the indices for those events that comprise a sequence These events normally consist of the initiating event and failure of one or more controls, including any failure duration indices. However, accident sequences may

consist of varying numbers and types of undesired events. Methods for deciding what frequencies and failure durations need to be considered will be described later in this appendix. Based on the sum of these indices, the likelihood category number for the risk matrix is assigned using Table A–3. The symbol "d" is used for this category number in the column heading.

(6) Consequence Category

This column is provided to assign the consequence category numbers based on estimating the consequences of all types (i.e., radiological, criticality, chemical, and environmental) that may occur. Based on this estimate, accidents can be assigned to the categories defined in 10 CFR 70.61. The symbol "e" is used for this category number in the column heading.

(7) Risk Index

This column is provided to list the risk index, which is calculated as the product of the likelihood category and consequence category numbers. This is shown in the column heading by the formula "f = d x e." Sequences with values of "f" less than or equal to 4 are acceptable. The risk index can be calculated as the product of the consequence category with the failure index of the first preventive control, giving a measure of the unmitigated risk, in the case where the second control is not available to perform its function. This is a way to assess the risk significance of the second control.

For sequences in which there is no second control specified, the unmitigated risk may be used to demonstrate an acceptable risk category. There may, however, be cases in which this is not possible; where there is a continuum of possible consequences resulting from occurrence of the accident sequence up to that point, credit may be taken for the unlikelihood of achieving an unacceptable physical state (e.g., probability that the upset exceeds a subclinical mass). This will require a thorough, documented justification for the reviewer to find this approach acceptable.

(8) Comments and Recommendations

This column is needed to record ISA team recommendations, especially when the existing system of controls is evaluated as being deficient. This may happen because a newly identified accident sequence is not addressed by existing controls, or because a deficiency has been found in the existing controls.

9. Alternate Methods of Presentation (Fault Trees)

Table A–9 displays the results of the ISA Summary in a tabular format by accident sequence. This approach is commonly developed from a What-If hazard evaluation technique, which is but one of several methods available. The methods that may be

used include What-If, HazOp, Failure Modes and Effects Analysis (FMEA), Fault Trees, and other methods. The What-If approach may be considered the least preferable of these approaches, particularly when there are a large number of accident sequences, as it is difficult to demonstrate completeness. That is, it will be difficult for the reviewer to verify that all credible accident sequences have been included in the hazard evaluation for a very complex process.

There are additional reasons why a tabular format (Table A–9) may not be the best method of displaying the results of the ISA Summary for all processes. A variety of different techniques may be used rather than rigidly adhering to one format, if the multimethod approach enhances the clarity of the presented data. One of the main weaknesses of the tabular format is that it considers the accident sequence to consist of the failure of only two discrete controls. The establishment of double contingency may require more than two controls to ensure that at least two unlikely and concurrent upsets must occur before criticality is possible (and that the overall likelihood of criticality is highly unlikely). Several distinct controls may in general be combined into a single control system. When grouped as shown in Figure A–2, there may be several distinct controls that must be grouped together to ensure each "leg" of double contingency is unlikely to fail. This definition of unlikely is in the context of the double contingency principle, which numerically is approximately $\leq 10^{-2}$, rather than the more restrictive value of $\leq 4 \times 10^{-4}$ as used in SRP Section 5.4.3.2(B)(ix). Use of this more conservative value would of course be acceptable, although it is highly doubtful that many operations would be able to meet this without the virtual elimination of administrative criticality controls. Although this information may be presented in the table by listing multiple controls in each bin (e.g., scenarios 2SX–005 and –008), it would be more efficacious to use a fault tree (Figure A–2).

In addition, each accident sequence in the table considers the failure of the first control followed by failure of the second. Therefore there are actually two complementary accident sequences that must be considered in different rows of the table. This particular aspect of the logic—and the general logical flow of the accident as it unfolds—is masked by using an approach that follows a simple linear development of the sequence from initiating event to completion. In addition, the What-If approach often does not consider the control failure at a sufficiently high level. The answer to the question "*What if the pump chamber leaks into the oil reservoir?*" is often "*The pump cannot leak because....*" Considering the next-to-the- top-level event in the tree to be the loss of volume control ensures that the system will remain adequately subclinical even in the event that the pump failure occurs.

Figure A-2: Fault Tree for SX Operation

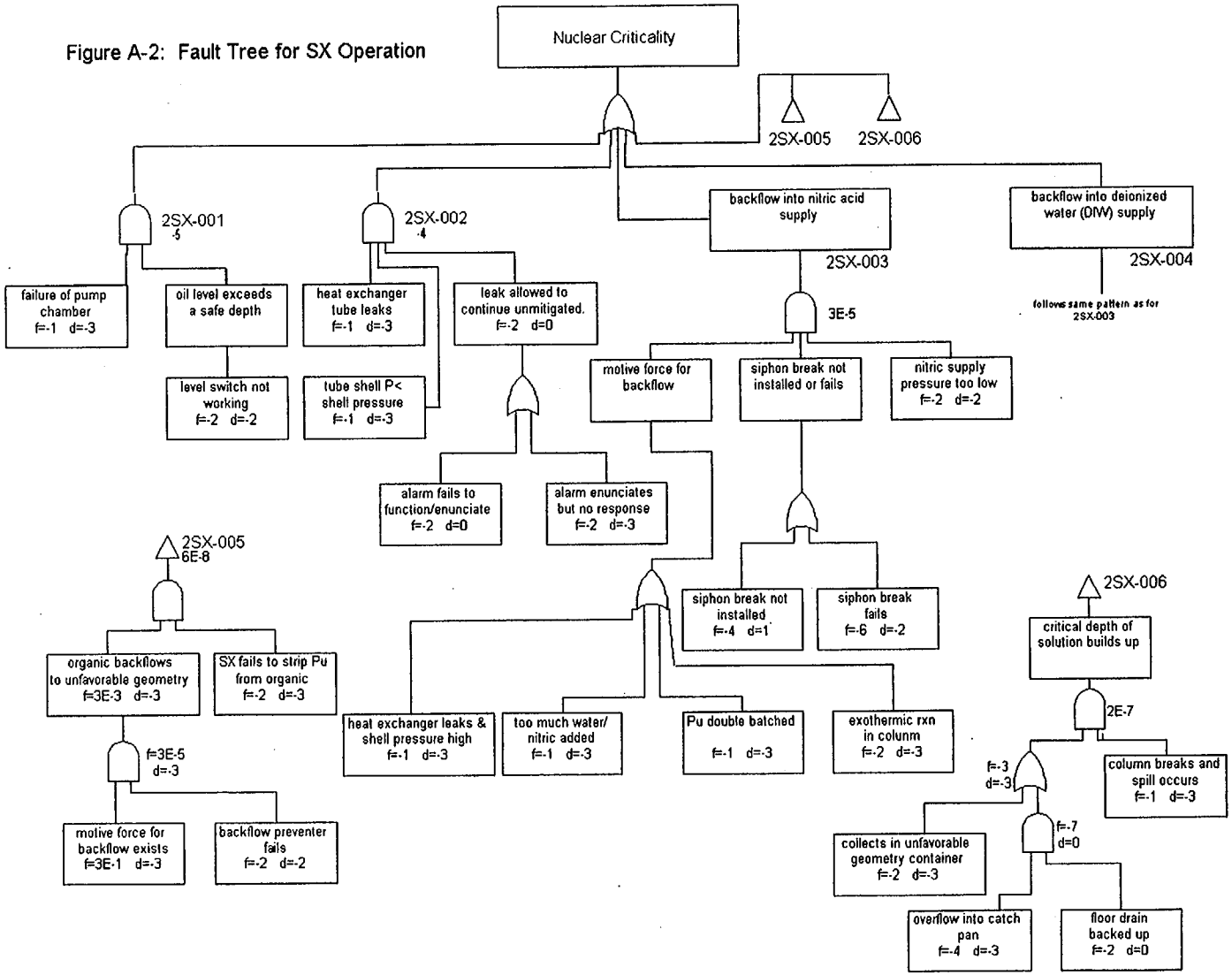

Figure A-2: Fault Tree for SX Operation (cont.)

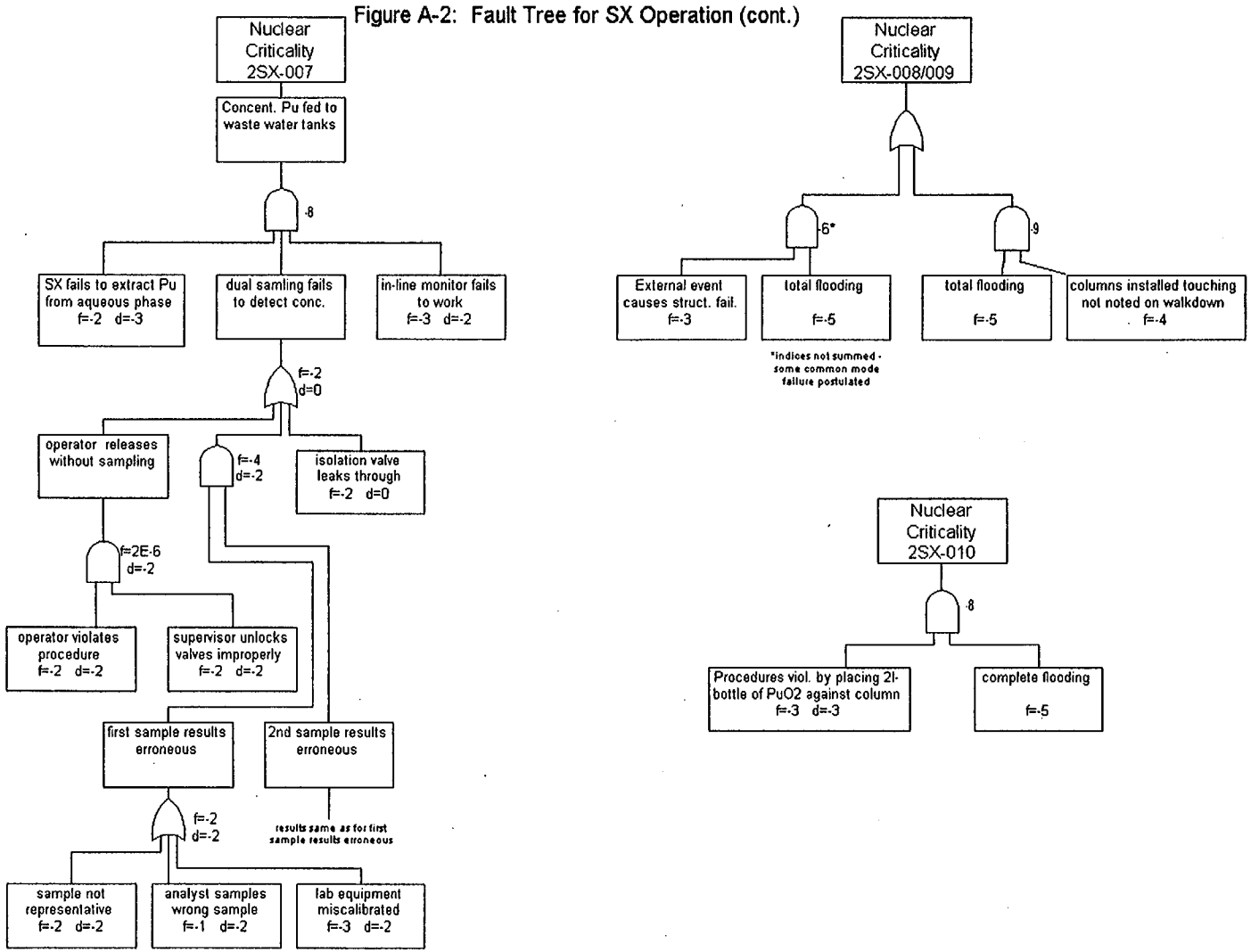

The advantages of using a fault tree to present the ISA Summary data include: (1) the top-down approach of a fault tree (as opposed to the bottom-up approach of What-If) ensures that all credible changes in process conditions—or loss of controlled parameters—are considered; (2) robustness is ensured by considering the control failures at a sufficiently high level; and (3) the logical sequence of events that must occur to cause a criticality cannot be described thoroughly using the tabular approach. Figure A–2 shows a fault tree for the accident sequences that are described in Table A–9; a cursory review demonstrates that these diagrams present a much higher level of information than is contained in Table A–9. For example, in order to have a criticality due to leakage through the heat exchanger into the steam supply, the following events would have occur: (1) the heat exchanger tubes would have to leak; and (2) the pressure on the tube side would have to drop below the pressure on the shell side; and (3) the leak would have to continue without being noticed, either by failure of the alarm to enunciate (mechanical) or failure of the operator to take appropriate actions (human error). This combination of events is then required to ensure that the overall consequence–getting concentrated uranium solution into the unfavorable geometry steam supply–is sufficiently unlikely (in fact, other controls are then recommended to reduce the likelihood index below -4). In addition, one can see that the loss of integrity of the evaporator tubes and loss of steam pressure are comparable events, and that reducing the frequency of mechanical failure of these items or the duration of alarm failure would result in the greatest drop in overall likelihood. In the event that other controls are credited in this scenario as a result of the recommendation, it would be difficult to convey the full amount of all the above information in the table.

A7. Mixed Oxide Blending Operation

Oxide blending is a process whereby dry UO_2 and PuO_2 powders are combined to produce a homogeneous blend suitable for fabrication into mixed oxide (MOX) fuel pellets and assemblies. The final mix consists of 20wt% PuO_2 (isotopically, ~96% ^{239}Pu and ~4wt% ^{240}Pu) and 80wt% U(0.7wt%)O_2. Process equipment downstream of the blending operation is designed with subclinical dimensions for 30wt% PuO_2 MOX. The main criticality controls in the blending operation are mass, moderation, and plutonium "enrichment" (defined for the purpose of this example as the weight percent of PuO_2 relative to the PuO_2-UO_2 blend).

A batch of UO_2 blendstock (~112 kg [246 lb]) is measured out into a favorable geometry feed hopper attached to a safety-grade scale. The material in the hopper is weighed and sampled for moisture, after which it is gravity fed into the favorable geometry blending hopper. This is a conical-bottom hopper which gravity drains into the cylindrical homogenizer. The low feed rate of the blendstock and plutonium oxide ensures that the powder attains a high degree of homogeneity as the two oxides are blended together. Homogeneity is not credited for criticality safety, however, until after the material passes through the homogenizer. In addition to ensuring criticality safety, moisture control is important to ensure that the powder will flow smoothly to ensure proper transfer and mixing.

PuO_2 powder is emptied from the 2-liter (0.45 gal) bottles into a plutonium oxide feed hopper through a hole in the bottom of a glovebox. This hopper is a 4-inch (10.2 cm) diameter cylindrical stainless steel vessel, which is heated to 150 °C (302 °F) to drive off residual moisture that may have accumulated. Several containers are emptied into the hopper until a mass of ~28 kg (61.6 lb) is reached. The powder is sampled and then gravity fed down a chute into the blending hopper. The flow rate of the plutonium oxide powder is controlled using a mass flow totalizer (MFT), which is interlocked to the plutonium feed valve; the feed rate is maintained at a slow rate using a stopcock on the input line. If the preset mass of plutonium oxide is exceeded, the MFT shuts the valve and prevents the overall plutonium enrichment in the blender from exceeding the safety limit of 22wt% PuO_2. After blending, the material is agitated for 30 minutes before being sampled; only after two independent samples confirm the correct enrichment may the material be transferred to the cylindrical homogenizer for further processing. Following this, the master mix is ball-milled and sieved to ensure proper consistency before being combined with additional U(0.7wt%)O_2, which results in a final mix of ~4wt% Pu.

Table A–10 presents the main accident sequences in the oxide blending operation. Table A–11 shows the IROFS credited for double contingency during oxide blending. Table A–12 shows the main accident sequences and the preventive controls used.

A table of accident sequences is used to communicate the ISA Summary information for the oxide blending operation; this operation is a simpler process from a criticality safety standpoint than the solvent extraction. Since the double contingency logic is based on a relatively simple set of controls on moderation, mass, and plutonium isotonic, this system is much more amenable to a tabular approach. Fault trees could be used profitably for this system, but there is a much lower level of complexity than in the first example, and tables may be adequately used. Several tables will in general be needed to summarize the information that must be presented; these should be cross-referenced to allow clear traceability of the control logic. The contents of the tables and figure for the oxide blending process are summarized below:

1. **Process Criticality Flow Diagram in Figure A–3**

   This process is inherently much simpler than the solvent extraction example considered above, from the standpoint of criticality safety. Note that in this case, the entire operation is conducted in favorable geometry equipment, so there is no attempt to distinguish between favorable and unfavorable process steps graphically. One should note that labels have been attached to each piece of equipment relied on for safety, so that this diagram may be cross-referenced with the tables. Each component relied on for safety must be identified for incorporation into the configuration management program. For example, not only the mass flow totalizer, but also the interlock back to the PuO_2 supply valve, and the valve itself, must be controlled to ensure that the active feature that prevents too high a plutonium enrichment in the blend hopper remains available and reliable to perform its function.

2. Accident Sequences in Table A–10

By displaying the accident sequences in the manner shown, it is immediately apparent that the criticality controls on the process are mass, moderation, and plutonium isotonic. Each of the accident sequences describes the initiating event and presents such information as the controls that prevent the loss of that controlled parameter, the safety significance of the initiating event, the probable cause, and so forth. The information should be succinctly provided in the ISA Summary to immediately put the accident sequences into the proper viewpoint.

3. Items Relied on for Double Contingency in Table A–11

Figure A–3 shows how a criticality flow diagram may be used effectively to summarize the contents of Table A–11. Please see Section A6 for a fuller discussion of this type of table.

4. Summary of Accident Scenarios and Risk Evaluation in Table A–12

Note that Scenario MOB–001 has a consequence category of 0 (no consequences) instead of 3 (for criticality). This is not actually needed, because the likelihood index is sufficiently low based on the two preventive controls. However, this was done for illustrative purposes. As described in the first entry in Table A–10, the loss of mass control due to the failure of both of these preventive controls cannot lead to criticality without a concurrent loss of moderation control. This should be documented in criticality calculations that would be referenced in the table. This is an acceptable way to treat accident scenarios for which there is sufficient defense-in-depth that criticality cannot be achieved without the occurrence of additional events. In other words, the accident sequence defined by the failure of two preventive controls does not result in a criticality.

Scenarios MOB–006a and –006b (and MOB–010a and –010b) represent cases in which a single initiating event may occur due to two different causes. Generally deeper level events than the initiating event are not treated, but in this case it made sense to separate the sequences MOB–006 and –010 into more than one subsequence because different controls are needed for each pathway. Accident scenarios should be considered separate sequences if the controls relied on for safety are different, if the consequences are different (two scenarios leading to loss of mass control may result in different physical amounts and configurations), or likelihoods are different. Two accident sequences may have the same initiating events and the same consequences but different intermediate conditions or steps.

Figure A-3: Oxide Blending Operation

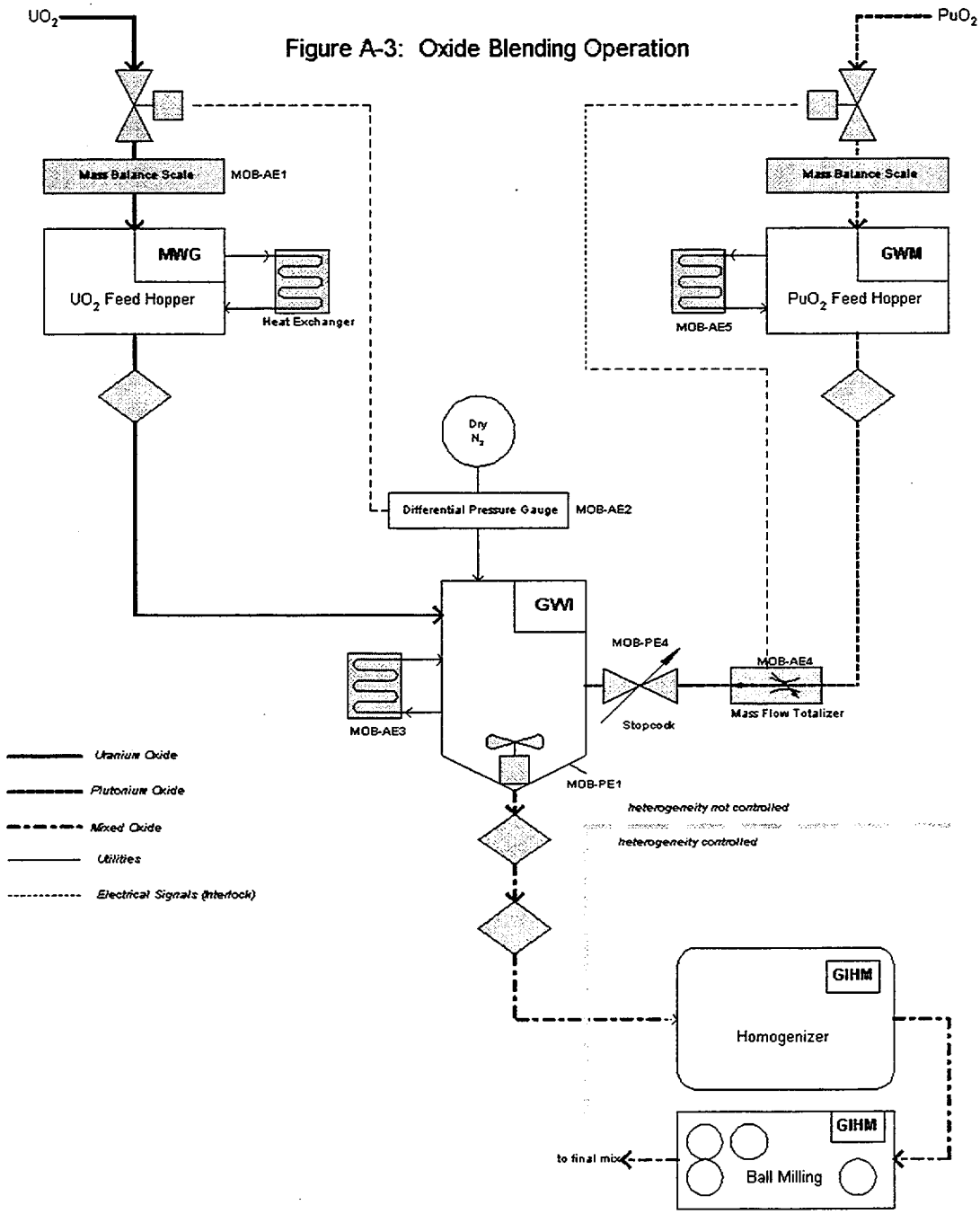

Table A–10: Accident Sequence Descriptions

Accident Sequence	Description
Loss of Mass	
MOB–001	The initiating event is exceeding the mass limit of the blend tank by adding too much UO_2 blendstock. This will have the effect of increasing the overall mass present, but will simultaneously decrease the plutonium enrichment. The overall effect of this is to increase the distance from the subclinical curve of mass as a function of plutonium enrichment as more blendstock is added. The system is adequately subclinical under conditions of double-batching uranium. To achieve criticality, this would have to be followed by a loss of moderation control.
MOB–002	The initiating event is exceeding the mass limit of the blend tank, by adding too much PuO_2. This will have the effect of increasing both the overall mass and plutonium "enrichment." At ~33 kg PuO_2 (72.6 lb) (and 23 wt%), the subclinical mass limit will be exceeded. Therefore, this could lead to criticality without any additional upsets and therefore dual controls are established on the plutonium mass.
MOB–003	The initiating event is exceeding the mass limit of the blend tank by performing the blending operation while there is still blended oxide present from the previous batch in the tank. Assuming the previous batch was properly mixed, it would require an additional 50 kg (110 lb) of PuO_2+UO_2 to exceed the subclinical mass limit. This could lead to criticality without any additional upsets and therefore dual controls are established to ensure the blend tank is empty of material before another batch is started.
Loss of Moderation	
MOB–004	The initiating event is exceeding the moderation limit (1 wt% H_2O) by adding UO_2 that has not been properly sampled. This could lead to criticality without any additional failures. Dual independent sampling is required to ensure moisture limits are adhered to. Also, material will not freely flow through orifice if wet.
MOB–005	The initiating event is exceeding the moderation limit (1 wt% H_2O) by adding PuO_2 that has not been properly sampled. This could lead to criticality without any additional failures. Dual independent sampling is required to ensure moisture limits are adhered to. Also, material will not freely flow through orifice if wet. In addition, both the plutonium feed hopper and the blend hopper are heated. Material is added at a sufficiently slow rate that contact with the heated blendstock will cause moisture in the plutonium to be driven off.
MOB–006	The initiating event is exceeding the moderation limit (1 wt% H_2O) by introduction of liquid water from overhead waterlines or roof leaks. The blend tank is completely enclosed within an airtight and watertight enclosure. There are no overhead waterlines allowed. The most likely cause of this scenario is backflow of condensate from the ventilation header, which serves to remove evolved water from the heated material. The ventilation header is sloped and equipped with drain lines to ensure against condensate backflow. Even in the event of water intrusion, the heating is sufficient to drive off any realistic accumulation of liquid water.

Accident Sequence	Description
Loss of Plutonium Enrichment	
MOB–07	The initiating event is exceeding the plutonium enrichment by adding too little blendstock to the blending hopper. This will have the effect of increasing plutonium enrichment while decreasing the overall mass. This will eventually reach criticality without any additional failures, but only when more than half the original UO_2 blendstock is omitted.
MOB–08	The initiating event is exceeding the plutonium enrichment by adding too much PuO_2 feed to the blending hopper. This is identical to Scenario MOB–02 and will be discussed as a loss of mass control.
MOB–09	The initiating event is exceeding the plutonium enrichment by adding PuO_2 to the blending hopper without first adding blendstock. This is the bounding case of scenario MOB–007. Controls are established to ensure that blendstock is added and in the correct proportion before addition of PuO_2 feed is allowed.
MOB–10	The initiating event is exceeding the plutonium enrichment by the formation of clumps of higher enrichment PuO_2 in the blending hopper. This can be caused by i) too high a plutonium feed rate, ii) failure of the magnetic stirrer, iii) failure of the deflection plate, or iv) failure of moderation control, resulting in a more cohesive mix. Calculations show there are sufficient controls such that homogeneity is not necessary to ensure subcriticality. However, criticality could occur if this were followed by a loss of moderation control.

Table A–11: Criticality Safety Limits and Controls

IROFS Identifier	Parameters and Limits	IROFS Description	Management Measures	QA Grade
MOB–ADM1	MASS: UO_2 feed ~112 kg (246 lb)	Procedures, training, and postings require that the mass be checked and certified by an operator and supervisor prior to PuO_2 feed allowed.	1. Procedures and training. 2. Operator/supervisor must sign material balance sheets.	NA
MOB–AE1	MASS: UO_2 feed ~112 kg (246 lb)	Safety grade scale attached to feed hopper.	1. Weekly calibration using mass standards. 2. Tare weight re-certified whenever hopper is emptied.	A
MOB–PE1	MODERATION: Blend hopper is limited to 1wt% H_2O.	Blend tank comprises a welded stainless-steel barrier. Blending required to be under dry nitrogen atmosphere.		
MOB–AE2	MODERATION: Blend hopper is limited to 1wt% H_2O.	Blending required to be under a dry nitrogen atmosphere. IROFS is a differential pressure gauge interlocked to the feed supply valves and system alarm.	1. Monthly functional test. 2. Configuration control.	B
MOB–AE3	MODERATION: Blend hopper is limited to 1wt% H_2O.	Electric heater maintains powder at 150 °C (302 °F) in blend hopper. Low-T gauge and alarm interlocked to supply valves.	1. Weekly functional test. 2. Configuration control.	A
MOB–AE4	MASS: PuO_2 feed ~28 kg (61.6 lb)	Mass flow totalizer (MFT) interlocked to PuO_2 supply valve.	1. Configuration control. 2. Weekly function test.	A
MOB–PE2	GEOMETRY: diameter < 12.7 cm (5")	Diameter of oxide blender must be less than 12.7 cm (5").	Configuration control.	C
MOB–PE3	GEOMETRY: diameter < 10.2 cm (4")	Diameter of PuO_2 feed hopper must be less than 10.2 cm (4").	Configuration control.	C
MOB–ADM2	MODERATION: Blend hopper is limited to 1 wt% H_2O	Procedures, postings, and training require the material in the UO_2 feed hopper to be sampled for moisture before it is released to the blending hopper. Supervisor concurrence required. Dual independent samples are required.	1. Procedures and training. 2. Lab QA procedures must be followed.	NA

IROFS Identifier	Parameters and Limits	IROFS Description	Management Measures	QA Grade
MOB–AE5	MODERATION: Blend hopper is limited to 1 wt% H_2O	Electric heater maintains powder at 150 °C (302 °F) in PuO_2 feed hopper. Low-T gauge and alarm interlocked to supply valves.	1. Weekly functional test. 2. Configuration control.	A
MOB–ADM3	MODERATION: Blend hopper is limited to 1 wt% H_2O	Procedures, postings, and training require the material in the PuO_2 feed hopper to be sampled for moisture before it is released to the blending hopper. Supervisor concurrence required. Dual independent samples are required.	1. Procedures and training. 2. Lab QA procedures must be followed.	NA
MOB–ADM4	MASS: PuO_2 feed ~28 kg (61.6 lb)	Only a limited number of 2-liter (0.5 gal) bottles may be emptied into the PuO_2 feed hopper, such that the total mass does not exceed 28 kg (61.6 lb) as indicated on material balance sheets.	1. Procedures and training. 2. Material control program; the feed hopper is a process measurement node.	NA
MOB–ADM5	MASS: Total blend hopper mass < 140 kg (308 lb)	Operators are required to check visually that the blend hopper is devoid of more than surface contamination after each campaign.	Procedures and training.	NA
MOB–ADM6	MASS: Total blend hopper mass < 140 kg (308 lb)	Blend hopper must be NDA scanned after each campaign.	Procedures and training.	NA
MOB–PE4	MODERATION: Blend hopper is limited to 1wt% H_2O.	Stopcock on PuO_2 feed line controls feed rate to 800 g/hr (1.8 lb/hr). This slow flow rate ensures that any moisture will be driven off on contact with the heated blendstock.	1. Flow rate checked during run by monitoring MFT. 2. Configuration control.	B
VEN–PE13	MODERATION: Blend hopper is limited to 1wt% H_2O.	Ventilation header must be sloped away from the blend hopper.	Configuration control.	C
VEN–PE15	MODERATION: Blend hopper is limited to 1wt% H_2O.	Ventilation header must be equipped with condensate drains at its lowest point to prevent condensate backflow to the blend hopper.	1. Configuration control. 2. Periodic monitoring.	B
BLD16–65	MODERATION: Blend hopper is limited to 1wt% H_2O.	No overhead waterlines are allowed in Building 16.	Configuration control.	C

IROFS Identifier	Parameters and Limits	IROFS Description	Management Measures	QA Grade
MOB–ADM7	ISOTOPIC: PuO_2 content 20wt%	Supervisor must check that UO_2 feed hopper is empty and that the appropriate mass has been added before PuO_2 transfer is authorized.	1. Procedures and training. 2. Material control program; the blendstock feed hopper is a process measurement node.	NA

Table A–12: Accident Sequence Summary and Risk Index Assignment

Accident Sequence	Initiating Event (a)	Preventive Control 1 (b)	Preventive Control 2 (c)	Likelihood* Index T and Category C (d)	Conse-quence Category (e)	Risk Indices (g=d x e)	Comments & Recommendations
MOB–001	Too much blendstock added.	MOB–ADM1: Blendstock mass certified before introduction of PuO_2. F1 = -3. Material control sensitivity ensures this receives appropriate attention and supervisor oversight. D1 = -2. Process is a batch process, campaign is running several days. Failure would be detected at start of subsequent campaign.	MOB–ADM7: Supervisor must ensure that the appropriate mass was emptied from the blendstock feed hopper. F2 = -2. Required on checklist and reinforced by training and postings. D2 = -2. See MOB–001, Control 1.	T = -7 C = 1	0	0	Criticality not possible without an additional failure.
MOB–002	Too much PuO_2 added.	MOB–ADM4: No more than 28kg (61.6 lb) PuO_2 may be charged into the feed hopper. F1 = -3. Material control sensitivity ensures this receives appropriate attention and supervisor oversight. D1 = -2. See MOB-001, Control 1.	MOB–AE4: MFT limits total integrated PuO_2, which is transferred to the blend hopper. F2 = -3. Regular maintenance and testing ensures reliability. D2 = -2. Functionally tested weekly.	T = -8 C = 1	3	3	
MOB–003	MOX not cleaned out before next batch started.	MOB–ADM5: Visual check that blend hopper is empty before each campaign. F1 = -2. Required on checklist and reinforced by training and postings. D1 = -2. See MOB–001, Control 1.	MOB–ADM6: Blend hopper must be NDA scanned before each campaign. F2 = -2. Required on checklist and reinforced by training and postings. D2 = -2. See MOB–001, Control 1.	T = -5 C = 1	3	3	
MOB–004	Moderated blendstock added.	MOB–ADM2: Dual independent samples taken to confirm moisture level of blendstock. F1 = -3. Requires failure of two operators to follow procedures, and independence of sampling and lab analysis ensures reliability. D1 = -2. See MOB-001, Control 1.	MOB–AE3: Electric heater maintains temperature sufficient to drive off moisture in the blend hopper. F2 =-4. Past history with this model of heater shows it to be very reliable. D2 = -2. Functionally tested weekly.	T = -8 C = 1	3	3	
MOB–005	Moderated PuO_2 added.	MOB–AE5: Electric heater maintains temperature sufficient to drive off moisture in feed hopper. F1 = -4. Past history with this model of heater shows it to be very reliable. D1 = -2. Functionally tested weekly.	MOB–AE3: Electric heater maintains temperature sufficient to drive off moisture in the blend hopper. F2 = -4. Past history with this model of heater shows it to be very reliable. D2 = -2. Functionally tested weekly.	T = -10 C = 1	3	3	

Accident Sequence	Initiating Event (a)	Preventive Control 1 (b)	Preventive Control 2 (c)	Likelihood* Index T and Category C (d)	Conse-quence Category (e)	Risk Indices (g=d x e)	Comments & Recommendations
MOB–006a	Water backflow from ventilation condensate.	VEN–PE13: Ventilation header sloped away from blend hopper. F1 = -3. The configuration control program requires installation according to design drawings and prestartup verification. Several layers of management controls would have to fail to allow this to happen. D1 = 0. Would be checked during annual audit.	VEN–PE15: Ventilation header has condensate drains to prevent backflow. F2 = -3. The configuration control program requires installation according to design drawings and pre-startup verification. Several layers of management controls would have to fail to allow this to happen. D2 = 0. Would be checked during annual audit.	T = -6 C = 1	3	3	
MOB–006b	Water intrusion from external source.	MOB–PE1: Blend tank is watertight. F1 = -3. The ability of certified welders to ensure the integrity of welded vessels has been demonstrated. D1 = 0. Would be checked during annual audit.	MOB–AE2: Differential pressure gauge with interlock prevents introduction of feed if containment is breached. F2 = -2. Based on past failure rate data when used in combination with high efficiency particulate air (HEPA) filters. D2 = -1. Though sufficient to detect breach of the containment immediately (D~-5), its failure would be detected during monthly functional test. High demonstrated reliability means that D = -5 is actually more realistic.	T = -5 C = 1	3	3	
MOB–007	Too little blendstock added.	MOB–ADM1: Blendstock mass certified before introduction of PuO_2. F1 = -3. Material control sensitivity ensures this receives appropriate attention and supervisor oversight. D1 = -2. See MOB-001, Control 1.	MOB-ADM7: Supervisor must ensure that the appropriate mass was emptied from blendstock feed hopper. F2 = -2. Required on checklist and reinforced by training and postings. D2 = -2. See MOB-001, Control 1.	T = -7 C = 1	3	3	
MOB–008	same as MOB-002 (q.v.)						
MOB–009	PuO_2 added before blendstock.	MOB–ADM1: Blendstock mass certified before introduction of PuO_2. F1 = -3. Material control sensitivity ensures this receives appropriate attention and supervisor oversight. D1 = -2. See MOB-001, Control 1.	MOB–ADM7: Supervisor must ensure that the appropriate mass was emptied from blendstock feed hopper. F2 =-2. Required on checklist and reinforced by training and postings. D2 = -2. See MOB–001, Control 1.n	T = -7 C = 1	3	3	

Accident Sequence	Initiating Event (a)	Preventive Control 1 (b)	Preventive Control 2 (c)	Likelihood* Index T and Category C (d)	Conse-quence Category (e)	Risk Indices (g=d x e)	Comments & Recommendations
MOB-010a	PuO_2 clump develops by: feed rate too high	MOB-PE4: Feed rate controlled by stopcock. F1 = -3. This is locked into place and tested before start-up. Has no moving or wear parts. D1 = -3. Failure would be detected during the course of one shift. Process is continually monitored by operators.		T = -6 C = 1	3	3	
MOB-010b	PuO_2 clump develops by: failure of moderation control	MOB-AE5: Electric heater maintains temperature sufficient to drive off moisture in feed hopper. F1 = -4. Past history with this model of heater shows it to be very reliable. D1 = -2. Functionally tested weekly.	MOB-PE4: Feed rate controlled by stopcock. F2 = -3. This is locked into place and tested before start-up. Has no moving or wear parts. D2 = -3. Failure would be detected during the course of one shift. Process is continually monitored by operators.	T = -9 C = 1	3	3	

*Likelihood index T is a sum. Uncontrolled: T=frqi or frq1; Controlled: includes all indices T=a+b+c+d

Note 1: For these sequences the initiating event is failure of one of the controls, hence the frequency is assigned under that control.

APPENDIX B
NATURAL PHENOMENA/OTHER EXTERNAL EVENTS

B1. General Discussion

Natural phenomena events (i.e., earthquakes, high winds, tornadoes, tornado missiles, floods) and other external events (e.g., transportation accidents, airplane crashes, industrial accidents, and fires external to the facility) should be addressed in the integrated safety analysis (ISA) as initiating events.

Currently, no regulatory guides (RGs) in Division 3, Fuels and Materials Facilities, address natural phenomena events and other external events. Therefore, sections of NUREG–0800, Standard Review Plan (SRP), and Division 1 RGs for power reactors describe methods for performing evaluations for natural phenomena events and other external events and provide useful reference information (See B.2 References).

The applicant's approach for evaluating natural phenomena events and other external events should be in concert with the risk-informed approach described in 10 CFR Part 70, Subpart H. Although the references provide useful information for staff use in the review, if consulted, some of the analysis methods described therein would need to be adapted to be risk-informed and to agree with the approach described in 10 CFR Part 70, Subpart H.

The applicant's risk from natural phenomena events and other external events shall meet the performance requirements described in 10 CFR Part 70, Subpart H. For each external event, the goal is to identify the largest magnitude event (i.e., lowest probability of occurrence) for which the consequences in 10 CFR 70.61 are met. Once this event is identified, an assessment should be performed to determine whether the performance requirements in 10 CFR 70.61 are met. The applicant's evaluation to determine whether the performance requirements are met should be iterative. First, the applicant should perform evaluations to describe the likelihoods associated with a suite of magnitudes for each type of natural phenomenon or other external event. For example, when assessing earthquakes, the applicant should describe likelihoods associated with a suite of maximum accelerations ("g" values); when assessing tornadoes or high winds, the applicant should describe likelihoods associated with a suite of maximum windspeeds; when assessing floods, the applicant should describe likelihoods associated with a suite of maximum water levels and velocities.

Next, the applicant should select a likelihood for each external event and identify the associated magnitude (e.g., water level, windspeed, acceleration level). For each external event, the applicant should identify failures of items relied on for safety associated with the magnitude of the event, taking into consideration common-cause failures and the likelihoods of the failures, given the event. This step involves developing and applying intermediate assessment tools such as response spectra and floor response spectra for seismic analysis. The applicant should determine the consequences, in terms of radiation and chemical exposures to the public and workers and any nuclear criticalities, for each external event. The applicant should compare the consequences and the associated likelihoods to the performance requirements in 10 CFR Part 70, Subpart H. If the likelihood and consequences of the external event

satisfy the performance requirements, then the process should be repeated using a less likely event in order to identify the lowest likelihood event (i.e., largest magnitude event) for which the consequences in 10 CFR 70.61 are met. At this point, it should be determined whether the performance requirements are met. If the performance requirements are met, then the value (i.e., acceleration value; windspeed; water level) of the external event magnitude is acceptable. Otherwise, if the performance requirements are not satisfied, modifications should be identified and the process repeated until the performance requirements are satisfied. This process should be performed for each natural phenomenon event and for other external events.

For example, first a preliminary (or final) design is developed. Then, assume that the magnitude associated with a 1E-3 event is selected as a starting point and applied to the facility design. The failures of structures, systems, and components and the resulting consequences are determined. If the performance requirements in 10 CFR 70.61 are not met, then the facility should be designed for a larger magnitude event and the process repeated. If the performance requirements are met, this does not mean, however, that the process is completed since the performance requirements may still not be met for a higher magnitude event (i.e., less likely event). In this case, no redesign is necessary (since the performance requirements were met) but a larger magnitude event (i.e., less likely event) should be selected and the process repeated in order to identify the largest magnitude event for which the consequences in 10 CFR 70.61 are met. At this point, it should be determined whether the performance requirements in 10 CFR 70.61 are met. If the performance requirements are met, then the value (i.e., acceleration value; windspeed; water level) of the external event magnitude is acceptable. Otherwise, if the performance requirements are not satisfied, modifications should be identified and the process repeated until the performance requirements are satisfied.

B2. References

1. Floods

Nuclear Regulatory Commission (U.S.) (NRC). NUREG-0800, Standard Review Plan, Section 2.4.1, "Hydrologic Description." NRC: Washington, D.C.

———. NUREG-0800, Standard Review Plan, Section 2.4.2, "Floods." NRC: Washington, D.C.

———. NUREG-0800, Standard Review Plan, Section 2.4.3, "Probable Maximum Flood (PMF) on Streams and Rivers." NRC: Washington, D.C.

———. NUREG-0800, Standard Review Plan, Section 3.4.1, "Flood Protection." NRC: Washington, D.C.

———. Regulatory Guide 1.59, "Design Basis Floods for Nuclear Power Plants." NRC: Washington, D.C.

———. Regulatory Guide 1.102, "Flood Protection Plan for Nuclear Power Plants." NRC: Washington, D.C.

2. Wind and Tornadoes

———. NUREG-0800, Standard Review Plan, Section 3.3.1, "Wind Loadings." NRC: Washington, D.C.

———. NUREG-0800, Standard Review Plan, Section 3.3.2, "Tornado Loadings." NRC: Washington, D.C.

———. Regulatory Guide 1.76, "Design Basis Tornado for Nuclear Power Plants." NRC: Washington, D.C.

———. Regulatory Guide 1.117, "Tornado Design Classification." NRC: Washington, D.C.

3. Earthquakes

———. NUREG-0800, Standard Review Plan, Section 3.7.1, "Seismic Design Parameters." NRC: Washington, D.C.

———. NUREG-0800, Standard Review Plan, Section 3.7.2, "Seismic System Analysis." NRC: Washington, D.C.

———. NUREG-0800, Standard Review Plan, Section 3.7.3, "Seismic Subsystem Analysis." NRC: Washington, D.C.

———. Regulatory Guide 1.60, "Design Basis Response Spectra for Seismic Design of Nuclear Power Plants." NRC: Washington, D.C.

———. Regulatory Guide 1.92, "Combining Modal Responses and Spatial Components in Seismic Response Analysis." NRC: Washington, D.C.

———. Regulatory Guide 1.122, "Development of Floor Design Response Spectra for Seismic Design of Floor Supported Equipment and Components." NRC: Washington, D.C.

———. Regulatory Guide 1.161, "Damping Values for Seismic Design of Nuclear Power Plants." NRC: Washington, D.C.

———. Regulatory Guide 1.165, "Identification and Characterization of Seismic Sources and Determination of Safe Shutdown Earthquake Ground Motion." NRC: Washington, D.C.

4. Other External Events

———. NUREG-0800, Standard Review Plan, Section 2.2.1-2.2.2, "Identification of Potential Hazards in Site Vicinity." NRC: Washington, D.C.

———. NUREG-0800, Standard Review Plan, Section 3.5.1.6, "Aircraft Hazards." NRC: Washington, D.C.

———. Regulatory Guide 1.91, "Evaluation of Explosions Postulated to Occur on Transportation Routes Near Nuclear Power Plants." NRC: Washington, D.C.

APPENDIX C
NUCLEAR CRITICALITY SAFETY EXAMPLES

Nuclear criticality safety (NCS) has become one of the disciplines of greatest safety focus by the NRC and the nuclear fuel industry. Many of the safety and regulatory issues that arise at the various fuel cycle facilities involve NCS, which has consequently received a considerable amount of interest and management attention. This appendix therefore contains examples of how the acceptance criteria in the NCS Chapter (Chapter 6.0) of this SRP may be applied at a hypothetical mixed oxide (MOX) fuel fabrication facility.

The examples should not be treated as acceptance criteria by the reviewer or the applicant, but provide additional guidance to both the reviewer and the applicant in how the criteria could be applied in the context of an actual MOX fuel fabrication facility. The purpose of this appendix is to provide examples that illustrate the general and abstract concepts in Chapter 6.0 concretely and elucidate the acceptance criteria by showing how they may be applied in a real MOX plant. This is based on an imperfect knowledge of the principles of operation of a MOX fuel fabrication plant, such as that described in Appendix A, "Example Procedure for Risk Evaluation."

Thus the examples presented merely give a hypothetical instance of how a given acceptance criterion may be applied on a particular process. The details of how the acceptance criterion is met may be very different in the actual design or in another process.

C1. SRP Section 6.4.3.3.1(G) states:

> The applicant should commit to consider the variability and uncertainty in a process and the NCS subcritical limit when setting NCS safety limits. If a controlled parameter is dependent on other physical parameters (such as mass controlled indirectly by concentration and volume), then the uncertainties in each of the independent parameters should be folded into the estimated uncertainty of the dependent parameter.
>
> *Suppose the applicant has an unfavorable geometry waste tank, relying on maintaining less than a minimum critical mass for NCS. If the mass is controlled indirectly on the basis of measurements of concentration of material transferred to the tank, then the uncertainties in the volume of the tank, the identity of the solutions transferred, and the precision on any in-line monitors or sampling methods (uncertainty in the concentration measurement) would be taken into consideration in setting the mass limit. The mass safety limit would be set sufficiently low so that subcriticality would be ensured even under a worst-case combination of these uncertainties.*

C2. SRP Section 6.4.3.3.2(B) states:

> Based on the performance requirements in 10 CFR 70.61, the applicant should commit to the policy that: "No single credible event or failure could result in a criticality accident." This commitment should involve an evaluation to identify common-mode failures that may simultaneously defeat two or more controls.

Suppose the applicant has a metering pump that controls the flow of plutonium nitrate to a uranyl nitrate-plutonium nitrate blending tank. This pump may be credited with controlling both concentration in the tank and the "enrichment" (plutonium isotopics) in the tank. The applicant would evaluate the accident scenario resulting from failure of the pump and this evaluation would include a determination of possible common-mode failures due to simultaneous loss of both concentration and enrichment control. The failure could constitute a single contingency that could defeat both controls. If any such common-mode failure is identified, then additional controls besides concentration and enrichment are needed to meet the double contingency principle.

C3. SRP Section 6.4.3.3.2.1 contains requirements for the use of mass control for NCS. Application of criteria (A) and (B) are illustrated below:

Suppose the applicant has a filter press, and there is a safety limit to remove and handle filtercake on a safe batch basis. If the mass limit derived from criticality calculations is based on assumptions about the weight percentage of plutonium in the filtercake, then the applicant would first measure the proportion of plutonium before the filtercake could be removed and packaged. This would be done using calibrated instrumentation, such as non-destructive assay (NDA) equipment, through dual independent sampling, or by other direct measurement techniques. Reliance could not be placed on historical data or the process design in lieu of direct mass measurement, because there is always the potential for process upsets. These controls would be unnecessary if the filtercake were assumed to be 100% plutonium when deriving the mass limits. The equipment used to perform the measurements would be considered safety-related and would be placed in the plant's quality assurance program for regular testing and calibration.

C4. SRP Section 6.4.3.3.2.2 contains requirements for the use of geometry control for NCS. Application of criteria (A), (C), and (D) are illustrated below:

Suppose the applicant establishes a geometry limit on a tray of fuel rods by limiting the height of the rods to less than a safe depth. The applicant could use the minimum safe slab thickness in setting the safety limit, or could explicitly model the array of rods and demonstrate that a certain depth would be subcritical. If the applicant bases its limits on computer calculations of the actual configuration, the diameter and any other credited attributes of the rods should be conservatively taken into account. Field measurements should be performed and the geometrical tolerance should be added to the measured dimensions when comparing to the modeled value. If the basis of the slab thickness is handbook data, the safety limit should be no more than some specified percentage (say, 85%) of the minimum critical slab thickness. The depth of the restraining device should be designed so as to take any mounding of the fuel rods into account. When all these variations are added cumulatively the maximum depth should still be less than the established safety limit.[2]

---

[2]When geometry control is used in conjunction with other controls–such as dimensional limits specific to a particular uranium compound or when certain poisons are present–then this hybrid control should be considered one control. One could not take credit for a hybrid control (such as geometry-neutron poison) as one leg of double contingency, and then credit neutron poison as the second leg. An additional independent control is needed to meet the double

C5. SRP Section 6.4.3.3.2.3 contains requirements for the use of density control for NCS. Application of criterion (A) is illustrated below:

Suppose the applicant takes credit for an oxide density less than maximum theoretical density in the criticality calculations. Then process variables that could affect the density of pellets removed from the oxide sintering furnace may include: the length of residence time in the furnace, the temperature of the furnace, the atmosphere in the furnace, the additives added to the fuel, the force applied by the pellet press, and the reduction in effective density due to geometrical packing of pellets in trays. The applicant would be expected to provide assurance that there were sufficient controls on process conditions to ensure that the density credited in the evaluation would not be exceeded.

C6. SRP Section 6.4.3.3.2.7 contains requirements for the use of concentration control for NCS. Application of criteria (E) and (F) are illustrated below:

Suppose the applicant credits concentration control in a large geometry plutonium nitrate tank containing more than a minimum critical mass. Any process variables which are needed to maintain the plutonium in solution form should be specifically identified as NCS controls. These may include: acid molarity (excess nitric acid), electric heaters, or an air sparger or mechanical stirrer. Also, if precipitating agents are used in the facility, then the tank lid should be locked to prevent inadvertent manual introduction, and there should be no hard-piped connections of such materials to the tanks. Concentration should also be sampled periodically to ensure against accumulation of an unsafe mass.

C7. SRP Section 6.4.3.3.2.9 contains requirements for the use of neutron absorber control for NCS. Application of criterion (B) is illustrated below:

Suppose the applicant takes credit for the percentage of gadolinium in the oxide pellets in setting mass and/or geometry limits. Then the concentration of ^{64}Gd in the fuel would be measured and all process variables that could affect this parameter would be controlled. If the presence of fixed poison rods are credited for fuel assemblies, then the poison loading and dimensions of these rods would be declared as IROFS. If they are subjected to an environment (such as an acid pickling operation) where the poison could be degraded over time, then they should be placed on a periodic surveillance program to monitor its continued effectiveness.

C8. SRP Section 6.4.3.3.2.11 contains requirements for the use of heterogeneity control for NCS. Application of criteria (A), (B), and (C) are illustrated below:

Suppose the applicant takes credit for maintaining a low-enriched uranium solution in homogeneous form in a uranium oxide dissolution tank. Process features that ensure the uranium remains in solution and not in suspension, such as a motorized stirrer or heater, acid molarity, and post-dissolution filters, should be declared IROFS. Then the

---

contingency principle. For true geometry control, the system must still be subcritical when all other process parameters are at their worst credible conditions.

system should be evaluated over the entire range of particulate sizes, if heterogeneity is an important effect, to determine the optimal configuration.

C9. SRP Section 6.4.3.3.4(B)(i) discusses the setting of minimum subcritical margins for normal and credible abnormal conditions. This paragraph states, in part, "A condition that occurs on a regular basis during facility operations would not be considered abnormal."

Example of conditions that would be considered abnormal include mechanical failure or the defeat of rigorous administrative controls. Spills outside the tube of a favorable geometry sintering furnace due to mechanical breakdown would probably be considered abnormal. A spill of SNM when open containers of powder are manually handled would not be considered an abnormal occurrence. However, there may be engineered failures that could not be classified as abnormal occurrences. An example would be failure of evaporator tubing when operational data shows that this occurs on a regular basis (several failures per year).

SRP Section 6.4.3.3.4(B)(i) also states, in part, when discussing crediting abnormal events in setting minimum subcritical margins: "the increased risk associated with the less conservative margin should be commensurate with and offset by the unlikelihood of achieving the condition to begin with."

As an example of this, the applicant may choose to use a minimum subcritical margin of 0.05 (with no bias, $k_{eff} + 2\sigma \leq 0.95$), without further justification than having an validation study showing there is no measurable bias. However, the applicant may propose using a k_{eff} limit of 0.95 for normal conditions and 0.97 for abnormal conditions (without bias). The applicant would have to justify that the risk associated with reducing the margin by 0.02 is offset by the restrictions imposed on what events may be considered abnormal.

Suppose the square root of the pooled variance of the benchmark experiments is 0.02. A k_{eff} of 0.97 represents 1.5σ and 0.95 represents 2.5σ below the mean $k_{eff} = 1.0$. Using the assumption that the benchmarks are normally distributed, this permits a quantitative evaluation of the increase in risk due to the reduction in margin. Only 6.7×10^{-2} of critical systems will result in a k_{eff} more than 1.5σ below the mean; only 6×10^{-3} will result in a k_{eff} more than 2.5σ below the mean. Therefore, increasing the upper safety limit from 0.95 to 0.97 would result in approximately ten times the risk that a system calculated safe at this limit is actually critical. Normal conditions are expected to occur with a frequency on the order of ~1 /yr. Thus, to compensate for the increase in risk due to the degraded margin, abnormal conditions should have a frequency $\leq$ 0.1 /yr if the upper limit of 0.97 is to be used.

C10. SRP Section 6.4.3.3.4(E) addresses the determination of the code's area of applicability (AOA).

As an example of what would be included in the AOA, it would include a range of the chemical and physical forms of materials in the benchmark experiments, isotopic concentrations, moderation range, other materials and non-fissionable isotopes present, neutron energy ranges, and any codes options and statistics used. For example, an

AOA could be defined as: thermal mixed oxide cases with 4-10 wt% plutonium, H/Pu > 500, fuel-pin lattices in water, gadolinium and zirconium poisons, etc. The benchmarks could have been run with 500 generations and 1000 neutrons per generation, using 24-inch water albedos, no code biasing, and 27-group neutron cross sections. All of this information would be specified in the definition of the AOA.

C11. SRP Section 6.4.3.3.5 describes the requirement to comply with the double contingency principle and the need to evaluate common-mode failures.

Suppose a process depends on both geometry and moderation control, or on two independent controls on moderation (such as the integrity of the roof and enclosed gloveboxes). As an example of possible common cause effects, a major fire in the facility may have the potential to defeat both controls on moderation and geometry by sprinkler activation and by bringing material together into a more reactive configuration. Or dual moderation controls could be defeated by sprinkler activation and burning through of material gloveboxes. Such common-mode accident scenarios would be considered in the ISA and in the criticality safety evaluations.

As an example of possible justification for exceptions to the double contingency principle, suppose the applicant has a process requiring the processing of large quantities of uranium or plutonium oxide. It may not be economically feasible to limit throughput to less than several tons of oxide. In this instance, the only practical means of preventing criticality may be moderation control. Multiple controls on moderation in a large geometry hopper or fluidized bed reactor may be sufficient to ensure double contingency for most cases. However, there may be a single almost incredible event–such as a catastrophic breach in all layers of containment due to an explosion–that could lead to criticality. This would not be double contingency since a single event that could lead to criticality exists. However, single contingency may be authorized based on the extreme unlikelihood of such an event. Another example may be a system that relies only on an unusually rigorous passive geometry control, where there is no identifiable accident scenario that could credibly lead to criticality.

C12. SRP Section 6.4.3.3.7 discusses facility change requirements. Examples of changes that would or would not require prior NRC approval are presented below:

Suppose the applicant has a uranium solution pump with certain controlled attributes, such as volume and oil inventory. The attributes important to criticality safety are the plenum volume (pump is safe volume) and diameter, volume of the oil reservoir (safe volume and limited moderator into process), and pump capacity (required to prevent overflowing downstream equipment). A change that would not require prior NRC approval would be changing the manufacturer or model number of the pump, provided this did not affect any of the above attributes. Changing from a centrifugal to a positive displacement pump may not require prior approval, unless this introduces additional accident sequences (new failure modes) or reduced the reliability of the pump or any of the pump's characteristics important to NCS.

Replacement of a backflow preventer with a check valve would typically require prior approval, because although this did not change any controlled parameters or introduce

any new accident sequences, it reduced the margin of safety by replacing a robust control with one which is more likely to fail.

C13. SRP Section 6.4.3.3.8 discusses criteria for reportable criticality safety events.

Suppose the applicant has an unfavorable geometry waste water tank that relies solely on mass control for criticality safety. An unauthorized transfer to this tank would be reportable as a one-hour report, even if it were unknown whether an unsafe mass had been transferred (since mass is what is maintaining subcriticality). Even if it were later determined that an unsafe mass did not accumulate in the tank, this report should not be retracted. In this case, the mass control was lost even if the mass did not physically exceed a safe value, because the multiplicity of positive controls needed for double contingency was not maintained - thus, it would be reportable under Items C and D above.

As a second example, consider the case of a slab of molybdenum boats containing green MOX pellets, which are heat-treated in a sintering furnace. Typical criticality controls for this example would include the mass in each boat, the depth of pellets in the boat, and moderation. The depth of pellets is controlled (in this hypothetical example) by the boat's dimensions, although the boats are demonstrated to be adequately subcritical when filled up to the top with pellets at theoretical density. An applicant controlling mass in these boats may establish an operating limit lower than the actual capacity of the boats in order to ensure that the material is processed uniformly and to give the operators a certain amount of margin in filling the boats. The formal subcritical limit established in criticality safety evaluations typically exceeds this operating limit by a substantial amount. When controls are established with such conservatism, it may take several events before criticality is possible, including exceeding the analyzed safe slab depth of the boat and adding moderator. Because several events are needed for criticality even after an upset occurs, merely exceeding the operating limit would not be reportable as an immediate report under Appendix A Paragraph (a)(5). Double contingency would not be lost in this hypothetical case. The filling of a boat to two grams more than that allowed in the operating limit would not be considered significant (since the boats had been shown adequately subcritical even when overfilled well beyond this) and would not require reporting. This of course requires a significance determination as to what constitutes a significant loss of mass control in the criticality safety evaluation.

However, the filling of a boat until the material mounded over the top would violate both geometry and mass control and would be a significant loss of the control, since the mass would exceed the pre-analyzed condition. The resultant condition, and that of exceeding the subcritical limit, would constitute a twenty-four hour reportable events since the IROFS failed to meet the performance requirements of 10 CFR 70.61(e). Overflowing the material out of the boat and onto the floor, however, if it were not analyzed and shown to be subcritical as an upset condition in the criticality safety evaluation, would be reportable as an unanalyzed condition.

The information to be submitted in these reports would include, to the extent known at the time of the event, the quantities and isotopics of the materials involved, their moderation levels, and any other pertinent information needed to assess their k_{eff}, the

particular procedural failure that led to the event, and the condition of the remaining geometry and moderation controls to allow NRC to determine the actual and potential significance of the event.

APPENDIX D
FIRE HAZARDS ANALYSIS PROCEDURES

D1. The purpose of the fire hazards analysis (FHA) is to document specific fire hazards, fire protection features proposed to control those hazards, and the overall adequacy of facility fire safety. The FHA consists of a systematic analysis of the fire hazards, an identification of specific areas and systems important to facility fire safety, the development of design-basis fire scenarios, an evaluation of anticipated consequences, and a determination of the adequacy of facility fire safety.

D2. A preliminary FHA should be performed for the mixed oxide (MOX) facility early in the design phase to ensure incorporation of an acceptable level of protection in the evolving design.

D3. The FHA should be performed under the direction of a qualified fire protection engineer, with support from chemical, electrical, mechanical, and systems engineers, as well as operations staff as needed.

D4. The FHA should contain, but not be limited to, a conservative assessment of the following items and safety issues:

- Descriptions:
    - Construction (type);
    - Fire hazards;
    - Fire protection features;
    - Critical process equipment; and
    - Operations.
- Potential for a hazardous chemical incident[1] or radiation incident from a fire;
- Impact of natural hazards (earthquake, flood, or wind) on fire safety;
- Protection of items relied on for safety (IROFS);
- Life safety considerations that affect radiation safety;
- Emergency planning;
- Fire department/brigade response;
- Security and safeguards considerations related to fire protection; and
- Exposure fire potential and the potential for fire spread between two fire areas.

D5. The FHA should assume and evaluate the consequences of a single, worst-case automatic fire protection system malfunction during a fire. This could be a detection system that also functions to activate a pre-action-type sprinkler system. The failures and/or events postulated in the analysis should be consistent with the probability criteria in the ISA.

---

[1]For the definition of a hazardous chemical, refer to 10 CFR 70.4.

D6. If redundant automatic fire protection systems are provided in the fire area being analyzed under D5 of this appendix, only the system that causes the most vulnerable condition is assumed to fail. Passive fire protection features, such as blank fire-rated walls or continuous fire-rated cable wraps are assumed to remain viable in accordance with their fire endurance rating to the extent that they are properly constructed and maintained.

D7. The FHA is normally organized by the individual fire areas that comprise the facility. As defined in Section 7.7, a fire area is a location bounded by fire-rated construction, having a minimum fire resistance rating of 2 hours. The FHA through fire modeling (if necessary) and fire loading analysis should document that the fire ratings are appropriate for each fire area boundary. Where a facility is not subdivided by fire-rated construction, the fire area should be defined by the exterior walls and roof of the facility.

D8. The FHA should contain an inventory of IROFS that are susceptible to fire damage from credible fires (taking into account transient and temporary conditions) within each fire area. Loss of systems such as ventilation, cooling, or electrical power that could cause failures elsewhere in the facility should be evaluated. The FHA should also consider the improper operation of equipment due to spurious signals induced by fire damage. In addition, the effects of combustion products, manual firefighting efforts, and the activation of automatic fire suppression systems should be assessed.

D9. The FHA may need to produce fire-related parameters (temperatures, pressures, and air velocities) for evaluating radioactive material dispersion through the facility air distribution system as a result of fire. The radiological consequences should then be determined as part of the ISA.

D10. The quantity and associated hazards of flammable and combustible material that can be expected to be found within each fire area should be factored into the analyses. Consideration should also be given to the presence of transient combustibles associated with maintenance activities and storage. Average combustible loading, by itself, should not be used to estimate fire area fire severity. At minimum, for each designated fire area, the following fire hazards should be evaluated for potential fire severity and consequent damage:

1. Fire load from solid combustible materials (both quantity and configuration) including those materials of construction, in-situ materials, and anticipated transient combustible materials. Combustibles are defined as materials that do not meet the definition of noncombustible material as presented in National Fire Protection Association (NFPA) Standard 220. For the purposes of the fire load survey, combustibles that can be classified as limited-combustible (as per NFPA 220) may be so classified. In performing the fire loading survey, the end uses of the survey in the FHA and/or ISA should be kept in mind. These uses may include, but not be limited to: determining or verifying the proper design basis of the fire suppression system, determining the minimum required fire resistance for barriers, ensuring adequate prefire planning, and input to fire propagation or radionuclide transport

modeling. Each of these uses may require the data to be presented in different formats or level of detail.

2. Flammable and combustible liquids and gases used in the processes within the fire area (quantities or flow rates).

3. Process chemicals and materials (both quantity and location) that could present a toxic or radiological hazard, or that could significantly affect health or the quality of the environment through a release as a result of a fire emergency.

4. Potential ignition sources.

D11. The FHA should contain an assessment of facility fire water requirements including capacity, pressure, and storage requirements. The assessment should include a list of water-based automatic suppression systems and their maximum demands, interior hose stream requirements, and exterior hydrant requirements. With this assessment, the facility fire water system layout should also be provided, including the locations and characteristics of pumps, lines, tanks, towers, and sectionalizing valves.

D12. For each designated fire area determined to be important to facility fire safety, or for each fire area that contains IROFS, the FHA should provide input to the ISA regarding the postulated accident sequences caused or aggravated by fire. Either quantitative or qualitative methods may be used. Where quantitative analytical methods are used, all input data and assumptions are documented.

D13. The FHA should define those fire protection systems and procedures that provide reasonable assurance that the defined consequences of an accident sequence will not occur or will be mitigated. The coverage of fire detection and suppression systems should be shown within each fire area. For the identified fire protection measures, the applicant should specify compensatory measures to be implemented on a temporary basis in the event the identified systems are not operable. Both the compensatory measure(s) and the time schedule for implementation should be established.

Most of the guidance in this appendix originated from, "The Implementation Guide for Use with DOE Orders 420.1 and 440.1—Fire Safety Program," (G–420.1/B–0, G–440.1/E–0, September 30, 1995). In some cases, the original guidance was modified to reflect specific needs for the MOX facility.

D14. References

Department of Energy (U.S.) (DOE). G–420.1/B–0, G–440.1/E–0, "Implementation Guide for use with DOE Orders 420.1 and 440.1—Fire Safety Program." DOE: Washington, D.C. September 30, 1995.

National Fire Protection Association, Inc. (NFPA). Standard 220, "Standard on Types of Building Construction."

APPENDIX E
FIRE PROTECTION GUIDANCE FOR NUCLEAR FILTER PLENUMS

E1. Filter Plenum Construction

All high-efficiency particulate air (HEPA) filters should meet the requirements of American Society of Mechanical Engineers (ASME) ASME–AG–1, Section FC, and be listed as tested in accordance with Underwriters Laboratories, Inc. (UL) 586. Entrance filters and prefilters located upstream or made part of final HEPA filter exhaust plenums should be listed as Class 1 air filter units as tested in accordance with UL 900. Filter framing systems and filter plenum housing should be of noncombustible construction.

E2. Fire Rating Requirements for Plenum Housing, Openings, and Dampers

1. Filter plenum enclosures inside buildings or located less than 1.5 m (5 ft) from an adjacent building should be of 2-hour fire-rated construction. For enclosures greater than 1.5 m (5 ft) from an existing building, the fire rating may be either 1 hour or as determined by the fire hazard analysis (FHA).

2. Door openings into a 2-hour fire-rated filter plenum enclosure should be 1.5-hour minimum fire rated. Door openings into a 1-hour fire-rated filter plenum enclosure should be 0.75-hour minimum fire rated.

3. For ducts not required to function as a nuclear confinement system:

   (a) A 1.5-hour damper should be used where the duct penetrates a 2-hour fire-rated barrier.

   (b) A fire damper is not necessary where the duct penetrates a 1-hour barrier provided that automatic fire suppression is provided on both sides of the barrier and the duct passes through the wall and extends into the area outside the enclosure. Transfer grills and similar openings without ducting should be provided with an approved damper.

4. Fire dampers should not be used when penetrating fire-rated construction where ducting is an integral part of the air filter system equipment that is required to continuously function as part of the confinement system. Such duct material may be made part of the fire-rated construction by wrapping, spraying, or enclosing the duct with an approved material to provide a minimum 2-hour rating, or be qualified for a 2-hour fire-rated exposure to the duct at the penetration location using the fire damper criteria as specified in UL 555.

5. All mechanical and electrical penetrations made into fire-rated plenum enclosures should be fire stopped by listed materials meeting the requirements of American Society for Testing and Materials (ASTM) ASTM–E–814.

E3. Materials and Hazards Inside Plenums

1. Filter plenum enclosures should be used only for ventilation control equipment. The storage and accumulation of combustible materials (including spare filters) as well as combustible and flammable liquids should not be permitted.

2. Electrical equipment should comply with National Fire Protection Association (NFPA) Standard 70, and all electrical wiring inside the enclosure should be in metal conduit.

3. The concentration of flammable vapors inside the final filter plenum should not exceed 25 percent of their lower flammable limit. If flammable and combustible gases are expected as a result of facility processes, fixed combustible gas analyzers should be provided with analyzer alarms set to sound at 25 percent of the lower flammable limit and transmitted to a continuously manned position.

E4. Fire Screens for Filter Plenums

1. Fire screens should be located upstream from the prefilters and final filter plenums.

2. Fire screens with metal meshes from 3 to 6 openings per cm (8 to 16 openings per inch) should be provided and located at least 1.2 m (4 ft) upstream from all prefilters and at least 6.1 m (20 ft) upstream from all final filter plenum enclosures.

3. Where prefilters are located in final filter enclosures, fire screens should be located at least 6.1 m (20 ft) upstream from the prefilters.

E5. Fire Detection Systems

1. Automatic fire detectors should be rate-compensated-type heat detectors, approved for the specific use and in conformance with NFPA Standard 72. The detectors should be of the 88°C (190°F) temperature range unless operations require higher temperature air flows.

2. Heat detectors or pilot sprinkler heads should be provided in the final filter enclosure and in ducting prior to the final filter enclosure. Airflow should be considered when determining detector or pilot head location in ducting.

3. Detector installations should be engineered and installed for testing over the life of the detector. Where contamination levels permit, detectors can be removed and tested externally.

E6. Deluge Spray Suppression Systems

1. Automatic and manual water deluge spray systems should be provided inside all final filter plenums for protection of the filters where there is a leading filter surface area greater than 1.5 m^2 (16 ft^2).

2. Automatic deluge systems should be designed as per the applicable provisions of NFPA Standard 13 and Standard 15 and as follows:

   (a) Water spray density should be 10.2 lpm per m^2 (0.25 gpm per ft^2) over the entire filter area or 3.8 lpm per 14 m^3 per min (1.0 gpm per 500 ft^3 per min) airflow, whichever is greater.

   (b) Spray heads should be deluge-type sprinkler heads.

   (c) The spray pattern of the deluge head should be in the form of a downward vertical water curtain approximately 15 cm (6 in) in front of the filter. Heads should be spaced so that each head does not exceed 1.2 linear m (4 linear ft) of curtain coverage.

3. Manual spray systems should be designed as per the applicable provisions of NFPA Standard 15 and modified as follows:

   (a) Water spray density should be 10.2 lpm per m^2 (0.25 gpm per ft^2) over the entire filter area.

   (b) Nozzles should be deluge spray nozzles that form a full circle, solid cone discharge.

   (c) Spray nozzles should be horizontally directed at the face of the HEPA filters so that all areas of the first-stage filters and framing support system are wetted.

4. If provided, automatic and manual water spray system water supplies should be hydraulically calculated and capable of supplying a simultaneous flow of the automatic and manual water spray systems as well as the overhead ceiling automatic fire sprinkler systems for the fire area, providing air to the plenum for a minimum period of 2 hours.

5. Water for the deluge spray system should be provided by two separate water supply connections for reliability. One connection may be a fire department connection.

6. Demisters should be installed to protect the final stage of HEPA filters from being wetted by operation of the deluge water spray system.

Most of the guidance presented here is taken from Department of Energy (U.S.) (DOE) Standard, "Fire Protection Design Criteria" (DOE–STD–1066–97). The items of guidance presented are considered to be pertinent to the filter systems likely to be used at the mixed oxide facility. The items presented also represent the NRC responsibility for fire safety as related to facility nuclear safety rather than property protection. A more comprehensive discussion of nuclear filter plenum fire protection can be found in Chapter 14 of the DOE Standard and the references cited in the standard.

E7. References

American Society of Mechanical Engineers (ASME). ASME–AG–1, "Code on Nuclear Air and Gas Treatment."

American Society for Testing and Materials (ASTM). ASTM–E–814, "Fire Test of Through Penetration Stops."

Department of Energy (U.S.) (DOE). DOE–STD–1066–97, "Fire Protection Design Criteria." DOE: Washington, D.C. March 1997.

National Fire Protection Association, Inc. (NFPA). Standard 13, "Standard for the Installation of Sprinkler Systems."

———. Standard 15, "Standard for Water Spray Fixed Systems for Fire Protection."

———. Standard 70, "National Electric Code."

———. Standard 72, "National Fire Alarm Code."

Underwriters Laboratories, Inc. Standard 555, "Standard for Fire Dampers and Ceiling Dampers."

———. Standard 586, "High Efficiency Air Filtration Units."

———. Standard 900, "Standard for Test Performance of Air Filter Units."

APPENDIX F
THE NATIONAL ENVIRONMENTAL POLICY ACT AND ENVIRONMENTAL REPORTS

F1. Introduction

The Commission promulgated 10 CFR Part 51 to implement the National Environmental Policy Act (NEPA) of 1969, which requires an assessment of the environmental impacts for all major Federal actions. The NRC staff conducts an independent assessment for all licensing actions that may have a significant effect on the environment, based on the information provided by the applicant in an environmental report. An environmental report is required for actions listed in 10 CFR 51.60(b). This assessment is documented in an Environmental Assessment (EA) and Finding of No Significant Impact (FONSI) or Environmental Impact Statement (EIS).

The Commission determined that the actions listed in 10 CFR 51.22(c) have insignificant environmental impacts, and these actions are categorically excluded from the requirement for an EA and an environmental report. However, if pursuant to 10 CFR 51.23(c)(11), the action involves an amendment that involves changes in process operations or equipment, the applicant must justify that the action will not result in significant effects on the environment.

The Office of Nuclear Material Safety and Safeguards (NMSS) consolidated environmental review work into the Division of Waste Management (DWM) on May 17, 1999. DWM is responsible for preparing all NMSS EIS and reviewing each EA prepared in NMSS. The Division of Fuel Cycle Safety and Safeguards (FCSS) retains the responsibility to prepare each EA and FONSI and make determinations regarding the applicability of categorical exclusions. As a result, DWM is responsible for determining whether the applicant's environmental report is adequate to allow the preparation of an EIS. FCSS is responsible for determining if the applicant's environmental report is adequate to support the preparation of an EA and a FONSI or, as applicable, to make a determination regarding a categorical exclusion.

Staff coordination on the review of environmental reports used to prepare an EIS should be obtained through DWM. Supplementary guidance for FCSS staff use on determining the adequacy of environmental reports for an EA and FONSI or to justify the applicability of a categorical exclusion is provided in Section F2 for licensing actions after receipt of a license to possess and use special nuclear material (SNM).

Information in Section F2 is presented in parallel with the content of an environmental report, as specified in 10 CFR 51.45. This includes:

- Date of application.
  - Environmental considerations.
  - Description of the proposed action.
  - Purpose of the proposed action.
  - Description of the affected environment.
  - Discussion of considerations.

- Analysis of environmental effects of the proposed action and alternatives.
- Status of compliance.
- Adverse information.

The environmental report may include, reference, or supplement the information submitted to the NRC for prior licensing actions.

Section F3 discusses environmental reports for categorical exclusions and Section F4 reviews the NEPA documentation and coordination necessary for license amendments.

F2. Environmental Report Content

1. Date of Application

   The date of an application for a license to possess and use SNM for processing and fuel fabrication, scrap recovery, conversion of uranium hexafluoride, or the conduct of any other activity, that the NRC has determined pursuant to 10 CFR Part 51, Subpart A, will significantly affect the quality of the environment, is acceptable if the application is submitted at least 9 months before the commencement of construction, as required by 10 CFR Part 70.21(f).

2. Environmental Considerations

   An adequate environmental report addresses the requirements of 10 CFR 51.45(b), as described below.

   (a) Description of the Proposed Action

   The description of the proposed action includes a brief summary of the significant characteristics of the proposed facility, including the major site features and the major plant design and operating parameters. The description includes a complete discussion about how SNM will be processed at the facility. If future construction or expansion is proposed, the description includes a proposed project schedule showing the dates for initiation of site preparation, plant construction, and operation.

   (b) Purpose of the Proposed Action

   The statement of purpose demonstrates a need for the proposed project. This demonstration provides at least the following information: (1) the quantities of SNM used for domestic benefit, (2) a projection of national and foreign requirements for the services, and (3) alternative sources of supply for the proposed facility's services. If delay of the proposed project would have effects on the nation's material disposition program or on the applicant's business (such as loss of contracts, jobs, or future business), the applicant should discuss these effects.

(c) Description of the Affected Environment

The description of the affected environment includes:

(i) Site location (including longitude and latitude) and facility layout;

(ii) Regional demography and land use;

(iii) Socioeconomic information, including that for low-income and minority populations within a 50-mile radius;

(iv) Regional historic, archaeological, architectural, scenic, cultural, and natural landmarks;

(v) Local meteorology and air quality;

(vi) Local surface water and groundwater hydrology;

(vii) Regional geology and seismology; and

(viii) Local terrestrial and aquatic ecology.

To the extent possible, this information is current and reflects observations and measurements made over a period of years, especially for conditions that are expected to vary seasonally (e.g., precipitation, wind speed and direction, and groundwater levels).

(d) Discussion of Considerations

The reviewer should find that the discussion of considerations is acceptable if it includes:

(i) Impacts of the proposed action on the environment, such as the:

- Effects of site preparation and construction on land use and water use;
- Effects of plant operation on the human population (including consideration of occupational and public radiation exposure) and important biota;
- Any irreversible commitments of resources because of site preparation and plant construction and operation, such as destruction of wildlife habitat, removal of land from agricultural use, and diversion of electrical power;

- Plans and policies regarding deactivation, decommissioning, and dismantling at the end of the plant's useful life;
- Environmental effects of the transportation of radioactive materials to and from the site;
- Environmental effects of accidents;
- Impacts on air and water quality; and
- Impacts on cultural and historic resources.

The environmental report discusses the impacts on the environment in proportion to their significance and considers the cumulative impacts of the proposed action. In addition, accident analyses provided in the environmental report are consistent with the accident scenarios and consequences described in the applicant's Integrated Safety Analysis Summary.

(ii) Adverse environmental effects

The applicant describes any adverse environmental effects that cannot be avoided should the proposal be implemented. This description is presented in quantitative terms to the maximum extent possible. This discussion makes clear which of these effects are unavoidable and subject to later amelioration and which are unavoidable and irreversible. The description includes specific measures that the applicant could take or plan to take to mitigate adverse effects.

(iii) Alternatives to the proposed action

The discussion of alternatives to the proposed action is sufficiently complete to aid NRC in developing and exploring, pursuant to Section 102(2)(E) of NEPA, "appropriate alternatives to recommended courses of action in any proposal which involves unresolved conflicts concerning alternative uses of available resources." To the extent practicable, the environmental impacts of the proposal and the alternatives are presented in comparative form.

The discussion of alternatives includes siting alternatives and design alternatives. Comparable levels of information on each site need not be presented as long as the applicant presents sufficient information to facilitate a fair and reasonable comparison. As appropriate, the following factors are considered when comparing alternative sites:

- Physical characteristics of the area, including demographic, geological, hydrological, meteorological, and seismological conditions of the site and surrounding area;
- Location of power sources and transmission lines;
- Location of the major product market;
- Location of raw materials, components, and sources of supply;
- Availability of air, rail, roads, and water for transport of raw materials and supplies, finished products, and solid wastes;
- Commitment of natural resources for site preparation and plant construction, including but not limited to the destruction or diminution of wildlife habitats, flora, woodlands, and marshlands;
- Commitment of capital for site preparation and plant construction;
- Cost of operation, including consideration of labor supply, prevailing wage rates, and other recurring or nonrecurring costs;
- Availability of municipal services or, conversely, the cost of providing services such as water and sewage treatment;
- Requirements for relocating homes and families; and
- Existing and projected land use and economic status of the community (e.g., urban, industrial, stable).

(iv) Relationship between short-term uses and long-term productivity

The relationship between local short-term uses of the environment and the maintenance and enhancement of long-term productivity is discussed. Short-term uses are considered to be those that occur during the active life of the facility. Long-term productivity represents the use of the environment beyond deactivation and decommissioning of the facility.

(v) Irreversible or irretrievable commitments of resources

Any irreversible environmental commitments and irretrievable material resources that would be involved in the proposed action are discussed.

3. Analysis of Environmental Effects of the Proposed Action and Alternatives

An adequate environmental report analyzes the environmental effects of the proposed action and alternatives. In accordance with 10 CFR 51.45(c), the analysis considers and balances the environmental effects of the proposed action and the alternatives available for reducing or avoiding adverse environmental effects, as well as the environmental, economic, social, and other benefits of the proposed action.

This analysis quantifies, to the fullest extent practicable, the various factors considered. If the application involves renewal or amendment of a current license, environmental impacts are quantified using environmental monitoring data collected by the licensee. To the extent that there are important qualitative considerations or factors that cannot be quantified, the analysis discusses those considerations and factors in qualitative terms. The analysis contains sufficient data to aid the staff in its development of an independent analysis.

4. Status of Compliance

As required by 10 CFR 51.45(d), the applicant should list all Federal permits, licenses, approvals, and other entitlements, which must be obtained in connection with the proposed action. The list is acceptable if it is complete and current as of the application date.

In addition, 10 CFR 51.45(d) requires that the environmental report include a discussion of the status of compliance with applicable environmental quality standards and requirements including, but not limited to, applicable zoning and land-use regulations, and thermal and other water pollution limitations or requirements that have been imposed by Federal, State, regional, and local agencies having responsibility for environmental protection. The discussion is acceptable if it includes a discussion of whether each alternative will comply with such applicable environmental quality standards and requirements. The discussion includes, but is not limited to, the following Federal laws:

(a) The National Historic Preservation Act of 1966;
(b) The Fish and Wildlife Coordination Act of 1966;
(c) The Wild and Scenic Rivers Act of 1968;
(d) The Endangered Species Act Amendments of 1978; and
(e) The Coastal Zone Management and Improvement Act of 1990.

5. Adverse Information

In accordance with 10 CFR 51.45(e), the preceding discussions and analyses are acceptable if they include information that is adverse to the proposed actions as well as information supporting the proposed action.

F3. Categorical Exclusion

An environmental report is not required for actions identified in 10 CFR 51.60(b)(1) that involve amendments to the mixed oxide (MOX) fuel fabrication facility that are not expected to result in significant environmental impacts. However, when these amendments involve changes in process operations or equipment, the applicant needs to justify that the changes will not result in significant environmental effects.

The information provided by the applicant to justify the categorical exclusion determination for changes in process operations or equipment is acceptable if it demonstrates the following as specified in 10 CFR 51.22(c)(11):

- There is no significant change in the types or significant increase in the amounts of any effluents that may be released offsite;
- There is no significant increase in individual or cumulative occupational radiation exposure;
- There is no significant construction impact; and
- There is no significant increase in the potential for or consequences from radiological incidents.

Review of the environmental report or information presented to support a categorical exclusion includes review of occupational exposure information. This review should be coordinated with the health physics reviewer to assess the adequacy of the information provided by the applicant.

F4. NEPA Documentation and Coordination

Before taking a licensing action such as a license amendment, the NRC will determine whether the proposed action qualifies for a categorical exclusion under 10 CFR 51.22 or whether an EA or EIS should be prepared.

1. An EIS will be prepared if the action meets the criteria in 10 CFR Part 51.20. An EA is not necessary if an EIS will be prepared. Coordination with DWM must be initiated to prepare the EIS.

2. A categorical exclusion will suffice if the action meets the criteria for categorical exclusions as defined in 10 CFR Part 51.22(c). (An action that qualifies for a categorical exclusion is usually identified at the start of the licensing review, and an EA is not required.) No coordination with DWM is necessary.

3. An EA will be prepared if the action meets the criteria in 10 CFR Part 51.21. DWM will be informed that an EA will be prepared. DWM should review the completed EA. On completion, the NRC determines whether to prepare an EIS or a FONSI.

Requirements for the preparation of an EIS, EA, or FONSI are described in detail in 10 CFR Part 51. Documents prepared in accordance with NEPA will follow pertinent NMSS procedures.

F5. Environmental Assessment (EA)

The Special Projects Branch (SPB) staff will prepare an EA that identifies the proposed action and includes the following, in accordance with 10 CFR 51.30:

1. A brief discussion of:

   (a) The need for the proposed action;

   (b) Alternatives to the proposed action as required by Section 102(2)(E) of NEPA;

   (c) The environmental impacts of the proposed action and alternatives, as appropriate; and

   (d) As required for special case EAs, as defined by NMSS Policy and Procedures Letter 1–50, Revision 2, 1999, disproportionately high and adverse human health or environmental effects on low-income and minority populations.

2. A list of agencies and persons consulted and identification of sources used. During preparation of an EA, the staff will consult with affected States on environmental issues and will document such contact in the EA. This documentation will include the following information identified in NMSS Policy and Procedures Letter 1–48, January 1995:

   (a) The name of each State, agency (including contacted individual's name), or person consulted;

   (b) The date of consultation(s);

   (c) The purpose of the consultation;

   (d) A brief summary of the views or comments expressed by the consulted party and the staff's resolution; and

   (e) References to publicly available documents containing additional information, if applicable.

   Much of the information used to prepare the EA is provided by the applicant in the environmental report. However, the staff will perform independent analyses of the environmental impacts of the proposed action and will discuss the conclusions of these analyses in the EA. The EA should focus on the impacts of the proposed

action and should be no more than 15 pages, unless necessary to explain any complicated environmental issues associated with the proposed action.

On completion, the EA should be forwarded to DWM for review. DWM reviews the EA to ensure consistency among all EAs prepared by NMSS. When DWM completes its review, the staff will determine whether to prepare an EIS or a FONSI on the proposed action. As provided in 10 CFR 51.33, a determination to prepare a draft FONSI may be made. As provided in 10 CFR 51.25, an EA is not necessary if it is determined that an EIS will be prepared.

F6. Finding of No Significant Impact (FONSI)

When the staff makes a final finding that there are no significant environmental impacts of the proposed action, a final FONSI will be published in the *Federal Register.* The Commission will not take the proposed action until after the FONSI is published. Requirements for the preparation of a FONSI for materials licensing actions are contained in 10 CFR 51.32-51.35. A FONSI will include the following:

1. Identification of the proposed action;

2. A statement that the Commission has determined not to prepare an EIS for the proposed action;

3. A brief presentation of the reasons why the proposed action will not have a significant impact on the quality of the human environment;

4. The EA or a summary of the EA;

5. A note of any other related environmental documents; and

6. A statement that the finding and any related environmental documents are available for public inspection and where the documents may be inspected.

NRC may make a determination to prepare and issue a draft FONSI for public review and comment before making a final determination whether to prepare an EIS or a final FONSI on the proposed action. A draft FONSI may be prepared if a FONSI appears warranted, but the proposed action is similar to one that normally requires an EIS or is without precedent.

The draft FONSI will be identified as a draft and will contain the information specified above for a final FONSI. The draft FONSI will be accompanied by or will include a request for comments on the proposed action and the draft findings within 30 days, or a longer period as may be specified in the notice of the draft findings. This draft FONSI will be published in the *Federal Register*, distributed as provided in 10 CFR 51.74(a), and made available in accordance with 10 CFR 51.123.

When a draft FONSI is issued, a final determination to prepare an EIS or final FONSI will not be made until the last day of the public comment period has expired.

F7. Environmental Impact Statement (EIS)

When the NRC determines that an EIS will be prepared for the licensing action, coordination should be initiated with DWM, which will review the environmental report and prepare the EIS. The environmental reviewer should coordinate with the FCSS Project Manager and DWM to ensure consistency between the environmental review for licensing and the preparation of the EIS. This coordination minimizes potential issues between the safety evaluation and the NEPA analysis, and ensures the results of the NEPA analysis are appropriately incorporated into the Safety Evaluation Report (SER) for the construction approval review and the SER for the review for the license to possess and use SNM.

APPENDIX G
CHECKLIST FOR EVALUATING ACCEPTANCE OF QUALITY ASSURANCE ELEMENTS

G1. Organization

The organizational elements responsible for Quality Assurance (QA) are acceptable if:

1. The responsibility for the overall QA is retained and exercised by the applicant.

2. The applicant identifies and describes the major delegation of work involved in establishing and implementing its QA program or any part thereof to other organizations.

3. When major portions of the applicant's QA program are delegated:

   (a) The applicant describes how responsibility is exercised for overall QA. The extent of management supervision should be given, including the position location, qualifications, and criteria for determining the number of personnel performing these functions.

   (b) The applicant evaluates the performance of work by the delegated organization. Method and frequency—once per year, although a longer cycle is acceptable with other evaluations of individual elements—are stated.

   (c) Qualified individuals or organizational elements are identified by position title within the applicant's organization as responsible for the quality of the delegated work before activities are started.

4. Clear management controls and effective lines of communication exist for QA activities among the applicant, contractors, and suppliers to ensure direction of QA.

5. Organizational charts clearly identify all the onsite and offsite organizational elements that function under the purview of QA (such as design, engineering, procurement, manufacturing, construction, inspection, testing, instrumentation, control, operation, and maintenance), the lines of responsibility, and the criteria for determining the size of the QA organization, including the inspection staff.

6. The applicant describes the QA responsibilities of each of the organizational elements noted on the organization charts.

7. The applicant identifies a management position that retains overall authority and responsibility for QA. This position may be filled by a person having the title "QA Manager" or another individual performing that function. This position has the following characteristics:

   (a) The position resides at least at the same organizational level as the position of the highest line manager directly responsible for performing activities that

affect the quality/safety of facility operations (such as engineering, procurement, construction, and operation) and is independent of operational restraints.

(b) The person in the position has effective communication channels with other senior management personnel.

(c) The person in the position has responsibility for approval of QA manuals.

8. Conformance to established requirements (except for designs) is verified by individuals or groups within the QA organization who do not have direct responsibility for performing the work being verified or by individuals or groups trained and qualified in QA concepts and practices who are independent of the organization responsible for performing the task.

9. Persons and organizations performing QA functions have sufficient access to management at a level necessary to ensure the capability to:

   (a) Identify quality/safety problems.

   (b) Initiate, recommend, or provide solutions through designated channels.

   (c) Verify implementation of solutions.

   Positions with the above authority are identified by position title and a description of how the above actions are carried out is provided.

10. When work contributes to a situation adverse to safety and has to be stopped, the following provisions apply:

    (a) Designated QA personnel, sufficiently free from direct pressures resulting from operational concerns, have the responsibility, delineated in writing, to stop work in unsafe situations and to control further operations until the conditions that created the unsafe condition are corrected.

    (b) The organizational positions with stop-work authority are identified.

11. Provisions are established for the resolution of disputes involving quality of items relied on for safety arising from a difference of opinion between QA personnel and personnel from other departments (engineering, procurement, manufacturing, etc.).

12. Designated QA individuals are involved in day-to-day activities relied on for safety of facility conditions and operations. QA staff members routinely attend and participate in status meetings to ensure that they are kept abreast of day-to-day activities and that there is adequate QA coverage of those activities.

13. Policies regarding the implementation of QA are documented and made mandatory. These policies are established at the facility management or corporate level.

14. The position description ensures that the individual directly responsible for the definition, direction, and effectiveness of overall QA has sufficient authority to effectively implement responsibilities. This position is to be sufficiently free from operational responsibilities to ensure independence of action. Qualification requirements for this individual are established in a position description that includes the following prerequisites:

    (a) Management experience through assignments to responsible positions.

    (b) Knowledge of QA regulations, policies, practices, and standards.

    (c) Experience in performing QA or QA-related activities in design, construction, or operation in a fuel cycle plant, a power reactor, a low-level waste facility, or in a similar high-technology industry.

15. The person responsible for onsite QA is identified by position and has the appropriate organizational position, responsibilities, and authority to exercise proper control over QA. The duties of this individual are structured such that adequate attention can be given to ensuring that QA at the plant site is being effectively implemented.

Additional guidance for organization is given in SRP Section 4.0, "Organization and Administration."

G2. QA Function

The QA function for items relied on for safety is acceptable if:

1. The scope of QA includes:

    (a) A commitment that activities affecting the quality of design, construction, and operation will be subject to the applicable controls of QA. Activities covered by QA are identified on QA-defining documents.

    (b) A commitment that any test program for items relied on for safety (IROFS) will be conducted with QA controls and a description of how QA will be applied.

    (c) A commitment that computer programs for functions related to safety will be procured/developed, modified, maintained, and used in accordance with QA controls and a description of how QA will be applied.

(d) A commitment that special items, environmental conditions, skills, or processes will be provided as necessary to ensure the quality of activities having an effect on safety.

2. A brief summary of the applicant's corporate QA policies is given.

3. The following provisions are established to ensure that quality-affecting procedures required to implement QA are consistent with QA commitments and corporate policies and are properly documented, controlled, and made mandatory through a policy statement or equivalent document signed by the responsible official:

   (a) The QA organization reviews and documents concurrence in the quality-affecting procedures.

   (b) The organizational group or individual responsible for the policy statement is identified.

   (c) The quality-affecting procedural controls of the principal contractors are provided for the applicant's review with documented agreement of acceptance before the initiation of activities relied on for safety.

4. Provisions are included for notifying the NRC of changes in the implementation of QA from that described in the application.

5. The QA organization and the necessary technical organizations participate early in the QA definition stage to determine and identify QA controls and the extent to which they are to be applied to items as they relate to safety. This effort may involve applying a defined, graded approach to the items in accordance with their importance to safety.

6. A description is provided that emphasizes how the detailed QA will be properly implemented and carried out.

7. A description is provided of how management (above or outside the QA organization) regularly assesses the scope, status, adequacy, and compliance of QA. These measures should include:

   (a) Frequent appraisals of QA status through reports, meetings, audits and/or self assessments.

   (b) Performance of an annual, preplanned, and documented assessment.

   (c) Identification and tracking of corrective actions based on assessment findings.

8. Activities that are IROFS (such as design, procurement, and site investigation) initiated prior to formal NRC acceptance of the QA program are controlled by a QA program in accordance with this SRP section. Approved procedures and appropriately trained personnel should be available to implement the applicable portion of the QA program prior to the initiation of the activity.

9. A summary description is provided on how responsibilities and control of quality-affecting activities are transferred from the principal contractors to the applicant as the design and construction phase is completed.

10. Indoctrination, training, and qualification[1] are established so that:

    (a) Personnel responsible for performing and verifying activities affecting quality are instructed as to the purpose, scope, and implementation of the applicable manuals, instructions, and procedures.

    (b) Personnel performing and verifying activities affecting safety and/or quality are trained and qualified in the principles, techniques, and requirements of the activity being performed.

    (c) For formal training and qualification, documentation includes a statement of the training objective and its content, the attendees, and the date of attendance.

    (d) Proficiency tests are given to those personnel performing and verifying activities affecting quality, and acceptance criteria are developed to determine if individuals are properly trained and qualified.

    (e) The certificate of qualifications clearly delineates the specific functions personnel are qualified to perform and the criteria used to qualify personnel in each function.

    (f) Proficiency of personnel performing and verifying activities affecting safety/quality is maintained by retraining, reexamining, and/or recertifying, as determined by management or program commitment.

11. The applicant's ISA is developed and maintained under QA controls.

G3. Design Control[2]

Control of the design of items relied on for safety is acceptable if:

---

[1] Guidance for training and qualification of plant personnel is given in SRP Section 15.4.

[2] Guidance for configuration management is given in SRP Section 15.2.

1. The scope of design control includes design activities associated with the preparation and review of design documents, including the correct translation of applicable regulatory safety requirements and associated design bases into design, procurement, and procedural documents.

2. Organizational responsibilities are described for preparing, reviewing, approving, and verifying design documents related to an item or its processes, such as system descriptions, design input and criteria, design drawings, design analyses, computer programs, specifications, and procedures.

3. Organizational responsibilities are described for planning and conducting site characterization, including reviewing, approving, and verifying analyses and conclusions.

4. Errors and deficiencies in approved design documents, including design methods (such as computer codes) that could adversely affect the performance of items and processes are documented, and action is taken to ensure that all errors and deficiencies are corrected.

5. Deviations from specified quality standards are identified, and procedures are established to ensure their control.

6. Internal and external design interface controls, procedures, and lines of communication among participating design organizations and across technical disciplines are established and described for the review, approval, release, distribution, and revision of documents involving design interfaces to ensure that items are compatible geometrically and functionally.

7. Procedures are established and described requiring documented verification of the dimensional accuracy and completeness of design drawings and specifications.

8. Procedures are established and described requiring that design drawings and specifications for items relied on for safety be reviewed by the QA organization to ensure that the documents are prepared, reviewed, and approved in accordance with company procedures and that the documents contain necessary QA requirements, such as inspection and test requirements, acceptance requirements, and those pertaining to the extent of documenting inspection and test results. These reviews are documented.

9. Guidelines or criteria are established and described for determining the method of design verification (design review, alternate calculations, or tests).

10. Procedures are established and described for design verification activities that ensure the following:

(a) The verifier is qualified, and neither the verifier nor the verifier's immediate supervisor is directly responsible for the design. In exceptional circumstances, the designer's immediate supervisor may perform the verification provided:

(i) The supervisor is the only technically qualified individual;

(ii) The need is individually documented and approved in advance by the supervisor's management; and

(iii) QA audits and self-assessments cover frequency and effectiveness of the use of supervisors as design verifiers to guard against abuse.

(b) Design verification is completed before release of procurement, manufacturing, or construction to another organization for use in other design activities. When this schedule cannot be met, the design verification may be deferred, provided the justification for this action is documented and the unverified portion of the design output document and all design output documents, based on the unverified data, are appropriately identified and controlled. Construction site activities associated with a design or design change should not proceed without verification past the point where the installation would become irreversible (i.e., require extensive demolition and rework).

(c) Procedural control is established for design documents that reflect the commitments for construction approval and the license to possess and use special nuclear material. Procedural control differentiates between documents that undergo formal design verification by interdisciplinary or multiorganizational teams and those that can be reviewed by a single individual (a signature and date are acceptable documentation for personnel certification). Design documents that pertain to plant safety and are subject to procedural control include, but are not limited to, specifications, calculations, computer programs, system descriptions, and drawings (including flow diagrams, piping and instrument diagrams, control logic diagrams, electrical single-line diagrams, diagrams of structural systems for major facilities, site arrangements, and equipment locations). Specialized reviews should be used when uniqueness or special design considerations warrant them.

(d) The responsibilities of the verifier, the areas and features to be verified, the pertinent considerations to be verified, and the extent of documentation are identified in procedures.

11. The following provisions are included if the verification method is only by test:

(a) Procedures provide criteria that specify when verification should be by test.

(b) Prototype, component, or feature testing is performed as early as possible before installation of plant items or before such installation would become irreversible.

(c) Verification by test is performed under conditions that simulate the most adverse design conditions as determined by analysis.

12. Procedures are established to ensure that verified computer codes are certified for use and that their use is specified.

13. Design and specification changes, including field changes, are subject to the same design controls that were applicable to the original design.

G4. Procurement Document Control

Control of procurement documents for the procurement of IROFS is acceptable if:

1. Procedures are established for the review of procurement documents to determine that quality requirements are correctly stated, inspectable, and controllable; that there are adequate acceptance and rejection criteria; and that procurement documents have been prepared, reviewed, and approved in accordance with QA requirements. To the extent necessary, procurement documents should require that contractors and subcontractors provide acceptable QA. The review and documented concurrence of the adequacy of quality requirements stated in procurement documents are performed by independent personnel trained and qualified in QA practices and concepts.

2. Procedures are established to ensure that procurement documents identify applicable regulatory, technical, administrative, and reporting requirements; drawings; specifications; codes or industry standards; inspection and test requirements; and special process instructions that must be met by suppliers.

3. Organizational responsibilities are described for procurement planning; the preparation, review, approval, and control of procurement documents; supplier selection; bid evaluations; and the review of and concurrence with supplier QA before initiation of activities relied on for safety. The involvement of the QA organization is described.

G5. Instructions, Procedures[3], and Drawings

Activities related to instructions, procedures, and drawings pertaining to items relied on for safety are acceptable if:

---

[3] Guidance for plant procedures is given in SRP Section 15.5.

1. Organizational responsibilities are described for ensuring that activities affecting the quality of IROFS are prescribed by documented instructions, procedures, and drawings and accomplished through implementation of these documents.

2. Procedures are established to ensure that instructions, procedures, and drawings that could affect safety include quantitative acceptance criteria (such as those pertaining to dimensions, tolerances, and operating limits) for determining that activities relied on for the safety of plant operations have been satisfactorily performed.

G6. Document Control

Control of documents related to IROFS is acceptable if:

1. The scope of document control is described and the types of controlled documents are identified. As a minimum, controlled documents include:

   (a) Design documents (e.g., calculations, drawings, specifications, analyses), including documents related to computer codes;

   (b) Procurement documents;

   (c) Instructions and procedures for such activities as fabrication, construction, modification, installation, maintenance, testing, and inspection;

   (d) Documents pertaining to as-built conditions;

   (e) QA and quality control manuals, procedures, and reports; and

   (f) Technical reports.

2. Procedures for the review, approval, and issuance of documents and changes thereto are established and described to ensure technical adequacy and inclusion of appropriate safety/quality requirements before implementation. The QA organization, or an individual other than the person who generated the document but who is qualified in QA, reviews and concurs with these documents in regard to QA-related aspects.

3. Procedures are established to ensure that changes to documents are reviewed and approved by the same organizations as those that performed the initial review and approval or by other qualified, responsible organizations delegated by the applicant.

4. Before commencing work, procedures are established to provide adequate assurance that documents are available at the location where the activity will be performed or that procedures are readily accessible to all personnel performing the work.

5. Procedures are established and described to provide adequate assurance that obsolete or superseded documents are removed and replaced by applicable revisions in work areas in a timely manner.

6. A master list or equivalent document control system is established to identify the current revision of instructions, procedures, specifications, drawings, and procurement documents. When such a list is used, it should be updated and distributed to predetermined responsible personnel.

7. Procedures are established and described to provide for the preparation of drawings pertaining to as-built conditions and related documentation in a timely manner to accurately reflect the actual design.

G7. Control of Purchased Items

Control of purchased IROFS is acceptable if:

1. Organizational responsibilities are described for the control of purchased items including interactions between design, procurement, and QA organizations.

2. Verification of suppliers' activities during fabrication, inspection, testing, and shipment of IROFS is planned and performed with QA organization participation in accordance with written procedures to ensure conformance to the purchase order requirements. The procedures, as applicable to the method of procurement, provide for:

   (a) The specification of the characteristics or processes to be witnessed, inspected, or otherwise verified; the method of verification and the required documentation; and the personnel responsible for implementing these procedures; and

   (b) Audits, surveillances, or inspections that ensure that the supplier complies with the quality requirements.

3. Procurement of spare or replacement parts for IROFS is subject to QA controls, to codes or standards, and to technical requirements equal to or better than the original technical requirements, or as required to prevent the procurement of defective items.

4. Selection of suppliers is documented and filed.

5. Items are inspected when received to ensure:

   (a) The item is properly identified and corresponds with the identification on the purchase document and the documentation when the item is received.

(b) The item and acceptance records satisfy the inspection instructions before installation or use of the item.

(c) Specified inspection, test, and other records (such as certificates of conformance attesting that the item conforms to specified requirements) are available at the facility before installation or use of the item.

6. Items accepted and released are identified as to their inspection status before they are forwarded to a controlled storage area or released for installation or further work.

7. The supplier furnishes the following records to the purchaser:

   (a) Documentation that identifies the purchased item and the specific procurement requirements (e.g., codes, standards, specifications) met by the IROFS;

   (b) Documentation that identifies any procurement requirements that have not been met; and

   (c) A description of those items that do not conform to the procurement requirements and that are designated "accept as is" or "repair."

   The procedure for review and acceptance of these documents is described.

8. For commercial "off-the-shelf" items for which specific QA controls cannot be imposed in a practicable manner, special quality verification requirements are established and described to ensure that an acceptable item has been received by the purchaser.

9. Suppliers' certificates of conformance are periodically evaluated by audits, independent inspections, or tests to ensure that they are valid and that the results are documented.

G8. Identification and Control of Items

Identification and control of IROFS are acceptable if:

1. Controls are established and described to identify and control IROFS. The description should include organizational responsibilities.

2. Procedures are established that ensure that identification is maintained either on the IROFS or on records traceable to the item, to preclude use of incorrect or defective items.

3. Identification of IROFS can be traced to the appropriate documentation, such as drawings, specifications, purchase orders, manufacturing and inspection documents, deviation reports, and physical and chemical test reports.

4. Correct identification of items is verified and documented before they are released for fabrication, assembling, shipping, and installation.

G9. Control of Special Processes

Control of special processes related to IROFS is acceptable if:

1. Organizational responsibilities, including those for the QA organization, are described for the qualification of special processes, equipment, and personnel.

2. Procedures are established for recording evidence of an acceptable level of quality for special processes, using qualified procedures, equipment, and personnel.

3. Qualification records of procedures, equipment, and personnel associated with special processes are established, filed, and kept current.

G10. Inspection

Inspection of items relied on for plant or process safety is acceptable if:

1. The scope of inspection indicates that an effective inspection program has been established. Procedures provide criteria for determining the accuracy requirements of inspection equipment and criteria for determining when inspections are required or for defining how and when inspections are performed. The QA organization participates in these functions.

2. Organizational responsibilities for inspection are described. Individuals performing inspections are other than those who performed or directly supervised the item/activity being inspected and do not report directly to the immediate supervisors who are responsible for the item/activity being inspected. If the individuals performing inspections are not part of the QA organization, the inspection procedures, personnel qualification criteria, and independence from undue pressure, such as operational needs, should be reviewed and found acceptable by the QA organization before the initiation of the activity.

3. A qualification plan for inspectors is established and documented and the qualifications and certifications of inspectors are kept current.

4. Inspection procedures, instructions, or checklists provide for the following:

   (a) Identification of characteristics and activities to be inspected;

(b) A description of the method of inspection;

(c) Identification of the individuals or groups responsible for performing the inspection in accordance with the provisions of Item 2 in this section;

(d) Acceptance and rejection criteria;

(e) Identification of required procedures, drawings, specifications, and revisions;

(f) Identification of inspection personnel, measuring and test equipment used (including any data recorders), and the results of the inspection; and

(g) Specification of the necessary measuring and test equipment, including accuracy requirements.

5. Inspection results are documented and evaluated and their acceptability is determined by a responsible individual or group.

G11. Test Control

Control of tests of IROFS is acceptable if:

1. The description of the scope of test control indicates that an effective test program has been established for tests, including proof tests before installation and preoperational tests. Procedures provide criteria for determining the accuracy requirements of test equipment and for determining when a test is required or how and when testing activities should be performed.

2. Test procedures or instructions provide, as required, for the following:

   (a) The requirements and acceptance limits in applicable design and procurement documents;

   (b) Instructions for performing the test;

   (c) Test prerequisites such as calibrated instrumentation, adequate test equipment and instrumentation, including their accuracy requirements, completeness of items to be tested, suitable and controlled environmental conditions, and provisions for data collection and storage;

   (d) Test acceptance and rejection criteria;

   (e) Mandatory inspection hold points for witness by owner, contractor, or inspector (as applicable);

   (f) Methods of documenting or recording test data and results; and

(g) Provisions for ensuring that test prerequisites have been met.

3. Test results are documented and evaluated and their acceptability is determined by a responsible individual or group.

4. A qualification plan is established and documented for those individuals conducting the tests, so that certifications for those individuals performing the tests are kept current.

G12. Control of Measuring and Test Equipment

Control of measuring and test equipment (such as instruments, tools, gauges, fixtures, reference and transfer standards, and nondestructive test equipment) identified as IROFS or used to measure or test other IROFS is acceptable if:

1. The scope for the control of measuring and test equipment is described, along with the types of equipment to be controlled. This information indicates that effective calibrations and adjustments have been established.

2. QA and other organizations' responsibilities are described for establishing, implementing, and ensuring the effectiveness of the calibrations and adjustments.

3. Procedures are established and described for calibration (technique and frequency), maintenance, and control of measuring and test equipment. The review of and documented concurrence with these procedures are described and the organization responsible for these functions is identified.

4. Measuring and test equipment is identified and traceable to the calibration data.

5. Measuring and test equipment is labeled, tagged, or otherwise controlled to indicate the due date of the next calibration. The method to "otherwise control" measuring and test equipment should be described.

6. Measuring and test equipment is calibrated at specified intervals on the basis of the required accuracy, purpose, degree of usage, stability characteristics, and other conditions affecting the measurement. The test equipment should have sufficient accuracy to ensure that the equipment being calibrated is within required tolerance, and the basis of acceptance is documented and authorized by responsible management. The management authorized to perform this function is identified.

7. Calibrating standards have greater accuracy than standards being calibrated. Calibrating standards with the same accuracy may be used if they can be shown to be adequate to meet the requirements, and the basis of acceptance is documented and authorized by a responsible member of the management staff. The management staff member authorized to perform this function is documented.

8. Reference and transfer standards are traceable to nationally recognized standards; where national standards do not exist, provisions are established to document the basis for calibration.

9. Measurements are taken and documented to determine the validity of previous inspections and the acceptability of items inspected or tested since the last calibration when measuring and test equipment is found to be out of calibration. Inspections or tests are repeated on items determined to be suspect.

G13. Handling, Storage, and Shipping

Handling, storage, and shipping of IROFS are acceptable if:

1. Special handling, preservation, storage, cleaning, packaging, and shipping requirements are established and implemented by suitably trained individuals in accordance with predetermined work and inspection instructions.

2. Procedures are established and described to control the cleaning, handling, storage, packaging, and shipping of items in accordance with design and procedure requirements.

G14. Inspection, Test, and Operating Status

Inspection, test, and operating status of IROFS are acceptable if:

1. Procedures are established to indicate the inspection, test, and operating status of items.

2. Procedures are established and described to control the application and removal of inspection and welding stamps and status indicators such as tags, markings, labels, and stamps.

3. Procedures are established and described to control the alteration of the sequence of required tests, inspections, and other operations relied on for safety. Such actions should be subject to the same controls as those for the original review and approval.

4. The status of nonconforming, inoperative, or malfunctioning items and processes is documented and identified to prevent inadvertent use. The organization responsible for this function is identified.

G15. Nonconforming Items

Control of nonconforming IROFS is acceptable if:

1. Procedures are established and described for the identification, documentation, segregation, review, disposition, and notification to affected organizations of nonconforming items (including computer codes) if disposition is other than to scrap. The procedures identify authorized individuals responsible for the independent review of nonconforming items, including their disposition and closeout.

2. QA and other organizational responsibilities are described for the definition and implementation of activities related to nonconformance control. This includes identifying those individuals or groups with authority for the disposition of nonconformance.

3. Documentation identifies the nonconforming item; describes the nonconformance, the disposition of the nonconforming item, and the inspection requirements; and includes signature approval of the disposition. Nonconformances are corrected or resolved before the initiation of preoperational testing of the item.

4. Reworked, repaired, and replacement items are inspected and tested in accordance with the original inspection and test requirements or acceptable alternatives.

5. Nonconformance reports are periodically analyzed by the QA organization to show quality trends, and significant results are reported to upper management for review and assessment.

G16. Corrective Action

Corrective actions that affect or support IROFS are acceptable if:

1. Procedures are established and described indicating that effective corrective actions have been established. The QA organization reviews and documents concurrence with the procedures.

2. Corrective action is documented and initiated after the determination of a condition adverse to safety/quality (i.e., nonconformance, failure, malfunction, deficiency, deviation, defective item, a failure to follow operating procedures, or a human error) to preclude recurrence. The QA organization concurrence is required regarding the adequacy of the corrective action.

3. Followup action is taken by the QA organization to verify proper implementation of corrective action and to close out the corrective action in a timely manner.

4. Significant conditions adverse to safety, the root cause of the conditions, and the corrective action taken to preclude repetition are documented and reported to immediate management and upper levels of management for review and assessment.

G17. QA Records[4]

Control of QA records is acceptable if:

1. QA and other organizations are identified and their responsibilities are described for the definition and implementation of QA records.

2. Inspection and test records contain the following, where applicable:

   (a) A description of the type of observation;

   (b) The date and results of the inspection or test;

   (c) Information on conditions adverse to quality;

   (d) Identification of the inspector or data recorder;

   (e) Evidence as to the acceptability of the results; and

   (f) Action taken to resolve any discrepancies noted.

3. Suitable facilities for the storage of the records are described.

G18. Audits and Assessments

Guidance for audits and assessments is given in SRP Section 15.6.

G19. Applicant's Provisions for Continuing QA

The applicant's provisions for continuing QA are acceptable if the submittal addresses reviews and updates based on reorganizations, revised activities, lessons learned, changes to applicable regulations, and other QA changes that should be reflected in the license application's QA program description to keep it current.

[4] Additional guidance for records management is given in SRP Section 15.8.

APPENDIX H
CHECKLIST FOR PLANT PROCEDURES

The list below shows activities that should be covered by written procedures. The list is not intended to be all inclusive, nor is it intended to imply that procedures be developed with the same titles as those on the list.

H1. Operating Procedures

1. Procedures that address startup, operation, shutdown, control of process operations, and recovery after a process upset include:

   (a) Ventilation;
   (b) Criticality alarms;
   (c) Shift routines, shift turnover, and operating practices;
   (d) Decontamination operations;
   (e) Plant utilities (air, other gases, cooling water, firewater, steam);
   (f) Temporary changes in operating procedures; and
   (g) Abnormal operation/alarm response:

      (i) Loss of cooling water;
      (ii) Loss of instrument air;
      (iii) Loss of electrical power;
      (iv) Loss of criticality alarm system;
      (v) Loss of containment;
      (vi) Fires; and
      (vii) Chemical process releases.

2. Maintenance activities that address repair, calibration, surveillance, and functional testing include:

   (a) Repairs and preventive repairs of items relied on for safety (IROFS);
   (b) Testing of criticality alarm units;
   (c) Calibration of IROFS;
   (d) High efficiency air particulate (HEPA) filter maintenance;
   (e) Functional testing of IROFS;
   (f) Relief valve replacement/testing;
   (g) Surveillance/monitoring;
   (h) Pressure vessel testing;
   (i) Piping integrity testing; and
   (j) Containment device testing.

3. Emergency procedures include:

   (a) Response to a criticality, and
   (b) Hazardous process chemical releases.

H2. Management Control Procedures

1. Training;
2. Audits and assessments;
3. Incident investigation;
4. Records management;
5. Configuration management;
6. Quality assurance;
7. Equipment control (lockout/tagout);
8. Shift turnover;
9. Work control;
10. Management control;
11. Procedure management;
12. Nuclear criticality safety;
13. Fire protection;
14. Radiation protection;
15. Radioactive waste management;
16. Maintenance;
17. Environmental protection;
18. Chemical process safety;
19. Operations;
20. Calibration control;
21. Preventive maintenance;
22. Design control; and
23. Test control.

APPENDIX I
HEALTH AND SAFETY RECORDS

The requirements for records management will depend on the applicable hazards and risks determined for the facility. Examples of the types of records that should be included in the system required by 10 CFR Parts 19, 20, 21, 25, and 70 are listed in Section I1 below. Section I2 lists examples of the types of records that should be established and maintained to provide reasonable assurance that items relied on for safety (IROFS) will be available and reliable to perform their function when needed, as required by 10 CFR 70.64(1). Section I2 is organized under the chapter headings of the SRP.

Although Sections I1 and I2 lists examples of records, the lists are not intended to be exhaustive or prescriptive in format. Furthermore, the applicant may choose to organize the records in ways other than shown here.

I1. Examples of Records Required by 10 CFR Parts 19, 20, 21, 25, and 70

(1) Audits;
(2) Access authorization for personnel;
(3) Administrative procedures with safety implications;
(4) Air sample data;
(5) Bioassay data;
(6) Change control records for material control and accounting program;
(7) Radiation dose to individuals of the public;
(8) Radiation exposure history;
(9) Individual radiation monitoring data;
(10) Individual radiation monitoring results;
(11) Individual intakes of radioactive material;
(12) Radioactive material storage records;
(13) Planned special radiation exposures;
(14) Radiation protection (and contamination control) recordsp;
(15) Radiation training records;
(16) Radiation work permits;
(17) Records of cumulative occupational radiation dose;
(18) Records of receipt, transfer, and disposal of radioactive material;
(19) Records of radioactive waste disposal;
(20) Reports of theft/loss of licensed material;
(21) Results of radiation surveys/calibrations;
(22) Results of measurements used to calculate radioactive effluents;
(23) Health and safety compliance records, medical records, personnel exposure records, etc.

I2. Examples of Records that Should Provide Reasonable Assurance that IROFS Will Be Available and Reliable to Perform their Function (Listed by SRP Section)

(1) General information:

(a) Construction records;
(b) Facility and equipment descriptions and drawings;
(c) Design criteria, requirements, and bases for safety-related structures, systems, or components, as specified by the facility configuration management system;
(d) Records of facility changes and associated integrated safety analyses, as specified by the facility configuration management system;
(e) Safety analyses, reports, and assessments;
(f) Records of site characterization measurements and data;
(g) Records pertaining to onsite disposal of radioactive or mixed wastes in surface landfills; and
(h) Specifications for items relied on for safety.

(2) Financial qualifications: None.

(3) Protection of classified matter:

(a) Procedures to prevent tampering and loss of classified/sensitive records; and
(b) Employee access authorization lists.

(4) Organization and administration:

(a) Administrative procedures with safety implications;
(b) Change control records for material control and accounting (MC&A) program;
(c) Organization charts, position descriptions, and qualifications records;
(d) Health and safety compliance records, medical records, personnel exposure records;
(e) Quality assurance records (see Section I2.15(1) of this appendix);
(f) Safety inspections, audits, assessments, and investigations; and
(g) Safety statistics and trends.

(5) Integrated safety analysis (ISA):

(a) ISA and revisions; and
(b) ISA summary.

(6) Nuclear criticality safety:

(a) Nuclear criticality control written procedures and statistics;
(b) Nuclear criticality safety analyses;
(c) Records pertaining to nuclear criticality inspections, audits, investigations, and assessments;
(d) Records pertaining to nuclear criticality incidents, unusual occurrences, or accidents; and
(e) Records pertaining to nuclear criticality safety analyses.

(7) Fire protection:

(a) Fire hazard analysis;
(b) Fire prevention measures, including hot-work permits and firewatch records;
(c) Records pertaining to inspection, maintenance, and testing of fire protection equipment;
(d) Records pertaining to fire protection training and retraining of response teams; and
(e) Prefire emergency plans.

(8) Chemical safety:

(a) Chemical process safety procedures and plans;
(b) Records pertaining to chemical process inspections, audits, investigations, and assessments;
(c) Diagrams, charts, and drawings;
(d) Records pertaining to chemical process incidents, unusual occurrences, or accidents;
(e) Chemical process safety reports and analyses; and
(f) Chemical process safety training.

(9) Radiation safety:

(a) Bioassay data;
(b) Exposure records;
(c) Radiation protection (and contamination control) records;
(d) Radiation training records; and
(e) Radiation work permits.

(10) Environmental protection:

(a) Environmental release and monitoring records; and
(b) Environmental report and supplements to the environmental report, as applicable.

(11) Plant systems:

(a) Written procedures and statistics for plant systems;
(b) Safety analyses and management measures for plant systems;
(c) Records pertaining to inspections, audits, investigations, and assessments of plant systems; and
(d) Records pertaining to a description of equipment and facilities design (electrical systems, structures and components, cooling water systems, containment and confinement systems, ventilation systems, etc.).

(12) Human factors:

(a) Personnel performance trend analyses; and
(b) Human factor improvements.

(13) Security and safeguards:

(a) Physical protection plans;
(b) Fundamental nuclear material control plans;
(c) Transportation plans;
(d) Records pertaining to granting unescorted access; and
(e) Records pertaining to material control and accounting of special nuclear material.

(14) Emergency protection:

(a) Emergency plan(s) and procedures;
(b) Comments on emergency plan(s) from outside emergency response organizations;
(c) Emergency drill records;
(d) Memorandum of understanding with outside emergency response organizations;
(e) Records of actual events;
(f) Records pertaining to the training and retraining of personnel involved in emergency preparedness functions; and
(g) Records pertaining to the inspection and maintenance of emergency response equipment and supplies.

(15) Management measures:

(a) Quality assurance:

(i) Table 1 in the reference listed second in Section I3 contains a list of QA records generated during design and construction of a nuclear power plant that should be maintained as QA records. Although that reference was developed for nuclear power plants, the QA recordkeeping requirements for the design and construction of this facility should be comparable in many areas; and

(ii) Appendix A of the reference listed third in Section I3 contains a list of typical procedures for the operation of nuclear power plants. Although that reference was developed for nuclear power plants, the QA procedure requirements for the operation of this facility should be comparable in many areas.

(b) Configuration management:

(i) Safety analyses, reports, and assessments that support the physical configuration of process designs and changes to those designs;
(ii) Validation records for computer software used for safety analysis or MC&A;

(iii) ISA documents including facility drawings, specifications, and purchase specifications for IROFS; and
(iv) Approved, current operating procedures and emergency operating procedures.

(c) Maintenance:

(i) Preventive maintenance records, including trending and root cause analysis;

(ii) Calibration and testing data for IROFS; and
(iii) Corrective maintenance records.

(d) Training and qualification of plant personnel:

(i) Personnel training and qualification records; and
(ii) Procedures.

(e) Plant procedures:

(i) Standard operating procedures; and
(ii) Functional test procedures.

(f) Audits and assessments:

(i) Audits of safety and environmental activities; and
(ii) Assessments of safety and environmental activities.

(g) Incident investigations:

(i) Investigation reports;
(ii) Discussion of how and when changes recommended by investigation reports are implemented;
(iii) Summary of reportable events for the term of the license; and
(iv) Incident investigation policy.

(h) Records management:

(i) Policy;

(ii) Material storage records; and
(iii) Records of receipt, transfer, and disposal of radioactive material.

I3. References

Nuclear Regulatory Commission (U.S.), Washington, DC. "Domestic Licensing of Special Nuclear Material, (10 CFR Part 70)." *Federal Register:* Vol. 64, No. 146. pp. 41338-31357. July 30, 1999.

Nuclear Regulatory Commission (U.S.) (NRC). Regulatory Guide 1.28, Rev. 3, "Quality Assurance Program Requirements (Design and Construction)." NRC: Washington, D.C. August 1985.

———. Regulatory Guide 1.33, Rev. 2, "Quality Assurance Program Requirements (Operation)." NRC: Washington, D.C. February 1978.

NRC FORM 335
(2-89)
NRCM 1102,
3201, 3202

U.S. NUCLEAR REGULATORY COMMISSION

BIBLIOGRAPHIC DATA SHEET

(See instructions on the reverse)

1. REPORT NUMBER
(Assigned by NRC, Add Vol., Supp., Rev., and Addendum Numbers, if any.)

NUREG-1718

2. TITLE AND SUBTITLE

Standard Review Plan for the Review of an Application for a Mixed Oxide (MOX) Fuel Fabrication Facility

Final Report

3. DATE REPORT PUBLISHED

MONTH	YEAR
August	2000

4. FIN OR GRANT NUMBER

5. AUTHOR(S)

Enrichment Section
Special Projects Branch

6. TYPE OF REPORT

Final

7. PERIOD COVERED *(Inclusive Dates)*

8. PERFORMING ORGANIZATION - NAME AND ADDRESS *(If NRC, provide Division, Office or Region, U.S. Nuclear Regulatory Commission, and mailing address; if contractor, provide name and mailing address.)*

Division of Fuel Cycle Safety and Safeguards
Office of Nuclear Material Safety and Safeguards
U.S. Nuclear Regulatory Commission
Washington, DC 20555-001

9. SPONSORING ORGANIZATION - NAME AND ADDRESS *(If NRC, type "Same as above"; if contractor, provide NRC Division, Office or Region, U.S. Nuclear Regulatory Commission, and mailing address.)*

Same as 8. above.

10. SUPPLEMENTARY NOTES

11. ABSTRACT *(200 words or less)*

This NUREG provides guidance to the NRC staff reviewers in the Office of Nuclear Material Safety and Safeguards who will perform safety and environmental impact reviews of the anticipated application for construction approval and license application for operations for the Mixed Oxide (MOX) Fuel Fabrication Facility under 10 CFR Part 70 specifically as related to plutonium processing and fuel fabrication. The standard review plan (SRP) presented in this NUREG ensures the quality, uniformity, stability, and predictability of the staff reviews. It presents a defined basis from which to evaluate proposed changes in the scope and requirements of the staff reviews. The SRP makes information about NRC acceptance criteria widely available to interested members of the public and the regulated industry. Each SRP section addresses the responsibilities of the persons performing the review, the review areas, the Commission's regulations pertinent to specific technical matters, the acceptance criteria used by the staff, how the review is accomplished, and the conclusions that are appropriate for the Safety Evaluation Report (SER).

12. KEY WORDS/DESCRIPTORS *(List words or phrases that will assist researchers in locating the report.)*

mixed oxide fuel fabrication plants
mixed oxide fuels
plutonium

13. AVAILABILITY STATEMENT

unlimited

14. SECURITY CLASSIFICATION

(This Page)
unclassified

(This Report)
unclassified

15. NUMBER OF PAGES

16. PRICE

This form was electronically produced by Elite Federal Forms, Inc.

Printed on recycled paper

Federal Recycling Program