NUREG-1640, Vol. 2

Radiological Assessments for Clearance of Materials from Nuclear Facilities

Appendices A through E

U.S. Nuclear Regulatory Commission
Office of Nuclear Regulatory Research
Washington, DC 20555-0001

NUREG-1640, Vol. 2

Radiological Assessments for Clearance of Materials from Nuclear Facilities

Appendices A through E

Manuscript Completed: May 2004
Date Published: October 2004

Prepared by
R. Anigstein*, H.J. Chmelynski*, D.A. Loomis*,
S.F. Marschke**, J.J. Mauro*, R.H. Olsher*,
W.C. Thurber*, R.A. Meck

*SC&A, Inc.
6858 Old Dominion Drive
Suite 301
McLean, VA 22101

**Gemini Consulting Company
19 River Run Way
Oak Ridge, TN 37830

R.A. Meck, NRC Project Manager

Prepared for
Division of Systems Analysis and Regulatory Effectiveness
Office of Nuclear Regulatory Research
U.S. Nuclear Regulatory Commission
Washington, DC 20555-0001
NRC Job Code Number Y6407

ABSTRACT

This report provides a complete description of calculations and their results estimating potential annual doses, normalized to a unit concentration, to an individual following the clearance of specific materials. These materials are scrap iron and steel, copper, aluminum, and concrete rubble from licensed nuclear facilities. Clearance means the removal of radiological controls by the licensing authority. The estimated potential doses are calculated probabilistically to account for a large number of possible variations in each of the 86 scenarios. These scenarios encompass the full range of realistic situations likely to yield the greatest normalized doses. Each scenario was analyzed with the 115 radionuclides considered most likely to be associated with materials from licensed nuclear facilities. The design basis of the analyses is to realistically model current processes, to identify critical groups on a nuclide-by-nuclide basis, and to enable the conversion of a dose criterion to a concentration.

Material for recycle or disposal was evaluated using material flow models and dose assessment models. Both models are based on probabilistic methods. This resulted in distributions of nuclide-by-nuclide normalized doses from one year of exposure per mass- or surface-based concentrations. The means and the 5th, 50th, 90th, and 95th percentiles are reported. These percentiles can be used to generically evaluate the likelihood that the derived mean concentration would correspond to a particular dose criterion. Additionally, they can be used to quantify the confidence that a safety goal is not exceeded.

CONTENTS

Appendices

A Inventory of Materials from NRC and Agreement State Licensees
B Parameter Values
C External Exposure Dose Coefficients
D Mixing of Cleared Materials
E Ingrowth of Radioactive Progeny

APPENDIX A

INVENTORY OF MATERIALS FROM NRC AND AGREEMENT STATE LICENSEES

CONTENTS

Page

Appendix A Inventory of Materials from NRC and Agreement State Licensees A-1
A.1 Introduction A-1
A.1.1 Types of Material A-2
A.1.2 Scope of Licensed Community A-2

A.2 Commercial Nuclear Power Reactors A-3
A.2.1 Decommissioning Policies A-3
A.2.2 Scaling Factors for Commercial Nuclear Power Reactors A-4
A.2.3 Mass of Materials in Reference BWR A-5
A.2.3.1 General BWR Description A-5
A.2.3.2 Ferrous Metals in Reference BWR A-7
A.2.3.3 Concrete in the Reference BWR A-10
A.2.3.4 Copper and Aluminum in the Reference BWR A-12
A.2.3.5 Reference BWR Mass Summary A-13
A.2.4 Mass of Materials in Reference PWR A-15
A.2.4.1 General Description of Reference PWR A-15
A.2.4.2 Mass of Systems and Components in Reference PWR A-17
A.2.4.3 Concrete in Reference PWR A-19
A.2.4.4 Reference PWR Mass Summary A-22
A.2.4.4.1 Ferrous Metals A-22
A.2.4.4.2 Copper A-24
A.2.4.4.3 Aluminum A-24
A.2.5 Materials Inventories of Operating Nuclear Power Plants A-25

A.3 NRC Fuel Cycle Facility Licensees A-25
A.3.1 Uranium Mills A-25
A.3.2 Uranium Hexafluoride Production Facilities A-26
A.3.2.1 Reference UF_6 Production Facility A-26
A.3.2.2 Inventory Summary - UF_6 Production Facilities A-28
A.3.3 Fuel Fabrication Facilities A-29
A.3.3.1 Reference Fuel Fabrication Facility A-30
A.3.3.2 Inventory Summary – Fuel Fabrication Facilities A-30
A.3.4 Uranium Enrichment Facilities A-33
A.3.5 Spent Fuel Storage Facilities A-34
A.3.5.1 Concrete Casks A-36
A.3.5.2 Horizontal Modular Storage (NUHOMS) A-38
A.3.5.3 Metal Casks A-40
A.3.5.4 Modular Vault Dry Store A-42
A.3.5.5 Pool (Wet) Storage A-43
A.3.5.6 Inventory Summary—Spent Fuel Storage Facilities A-44

Contents (continued)

Page

A.4 Non-Power Reactors A-45
A.4.1 Reference Non-Power Reactor A-46
A.4.2 Scaling Factors for Non-Power Reactors A-46
A.4.3 Inventory Summary—Non-Power Reactors A-49

A.5 Non-Fuel-Cycle Facilities A-50

A.6 Estimates of Mass-to-Surface Area Ratios A-51
A.6.1 Ferrous Metals A-51
A.6.1.1 Reinforcing Steel (Rebar) A-51
A.6.1.2 Structural Steel A-52
A.6.1.3 Pipe Hangers A-53
A.6.1.4 Miscellaneous Equipment A-54
A.6.1.5 Mass-to-Surface Ratios of Ferrous Metals A-55
A.6.2 Concrete A-56
A.6.2.1 Concrete in Reference PWR A-56
A.6.2.2 Concrete in BWR A-56
A.6.3 Copper A-56
A.6.4 Aluminum A-57

A.7 Total Mass of Potentially Cleared Materials from Licensed Facilities A-57

References A-60

Tables

Page

A.1 Nuclear power reactor scaling factors A-5
A.2 Estimated quantities of structural materials in the reference BWR facility A-7
A.3 Summary of ferrous metals in reference BWR A-8
A.4 Neutron-activated ferrous metal components in reference BWR A-9
A.5 Mass of components with activities on internal surfaces in reference BWR A-11
A.6 MARSSIM classification of rebar and structural steel in reference BWR A-12
A.7 Estimated mass (kg) and total activity (Ci) of aluminum piping in reference BWR . . A-13
A.8 Mass summary for reference BWR A-13
A.9 Estimates of metals used to construct a 1,000-MWe PWR facility A-15
A.10 Breakdown of materials used in PWR plant structures and reactor systems (t) A-16
A.11 Trojan PWR system characterization data A-18
A.12 Expected categories of Trojan systems and components not sampled A-20
A.13 Volume and activity of Trojan structural concrete components A-21
A.14 Summary of activity levels of ferrous metals in 1,000-MWe generic PWR A-23
A.15 Mass summary for reference PWR A-24
A.16 Licensed uranium hexafluoride production facilities A-26
A.17 Mass of steel in equipment of UF_6 production facility A-27
A.18 Mass of structural steel in UF_6 production facility buildings A-27
A.19 Activity levels of equipment in UF_6 production facility (piping not included) A-28
A.20 Licensed uranium fuel fabrication facilities A-29
A.21 Mass of steel in fuel fabrication equipment A-31
A.22 Mass of structural steel in buildings A-31
A.23 Activity levels on equipment in reference fuel fabrication facility A-32
A.24 Scaling factors for uranium fuel fabrication facilities A-33
A.25 Spent fuel storage system designs A-34
A.26 Licensed dry spent fuel storage facilities A-35
A.27 Mass of principal VSC-24 concrete cask components A-36
A.28 Dimensions of principal components of VSC-24 concrete cask A-37
A.29 Mass of principal NUHOMS components A-39
A.30 Dimensions of principal components of NUHOMS system A-40
A.31 Principal CASTOR metal cask components A-41
A.32 Dimensions of principal components of CASTOR metal cask A-41
A.33 Licensed non-power reactors A-47
A.34 Estimated quantities of structural material in reference NPR A-48
A.35 Waste generated during decommissioning of non-power reactors A-48
A.36 Ferrous metal components used in mass-to-surface ratio analysis A-51
A.37 Reinforcing steel (rebar) A-53
A.38 Typical pipe clamp data A-54
A.39 PWR pipe hanger data A-55
A.40 Mass of potentially cleared materials from decommissioning of licensed facilities . . A-59

Figures

Page

A.1 VSC-24 concrete cask storage system (BNFL 2000b) A-37
A.2 NUHOMS spent fuel storage system (TNW 2000) A-38
A.3 Modular vault dry storage facility (Raddatz and Waters 1996) A-42
A.4 Pool (wet) storage facility (GE Nuclear Energy 2000) A-43
A.5 Mass of decommissioning radwaste generated from non-power reactors A-48

A INVENTORY OF MATERIALS FROM NRC AND AGREEMENT STATE LICENSEES

A.1 Introduction

This appendix presents an analysis of inventories of materials associated with the dismantlement of nuclear facilities licensed by the NRC and Agreement States. Inventories from commercial nuclear power reactors, non-power reactors, nuclear fuel cycle facilities (e.g., fuel fabrication plants, UF_6 conversion plants, independent spent fuel storage facilities, and uranium mills), and non-fuel-cycle materials licensees (e.g., sealed source manufacturers, R&D laboratories, and hospitals) are developed to the extent that information on quantities of materials and activity levels was obtainable during the course of the present study. Detailed information is not available for each licensee. However, for some types of facilities, the NRC has published decommissioning studies on generic or reference facilities which facilitate an inventory analysis. To the degree possible, quantities of material associated with various activity levels are developed for each reference facility. In the case of nuclear reactors, scaling factors are used to account for differences in reactor size. Scaling approaches are also developed for some other categories of licensees.

Decommissioned commercial nuclear power reactors would be the major source of potentially cleared materials[1] from dismantlement of licensed facilities. A total of 69 pressurized water reactors (PWRs) and 35 boiling water reactors (BWRs) are currently licensed to operate by the NRC.[2] A typical PWR contains about 36,000 t of ferrous metals, 700 t of copper, 20 t of aluminum, and 180,000 t of concrete. Approximately 18% of the ferrous metals is neutron-activated or has significant surficial radioactivity; the balance is clean or could be potentially cleared. About one-third of this material is rebar in the concrete structures. BWRs typically generate more radioactive materials because of the nature of the reactor design. It is estimated that about 35% of the ferrous metals in a typical BWR is radioactive.

The analysis includes estimates of the mass of ferrous metals and concrete that would be generated during the decommissioning of fuel cycle facilities, including 2 uranium hexafluoride conversion plants, 7 fuel fabrication plants, and 20 independent spent fuel storage installations. Materials inventories from the decommissioning of uranium milling operations, including both NRC and Agreement State licensees, are described qualitatively. These facilities would not be significant future sources of materials, since most are currently undergoing decommissioning and dismantlement that will be completed in the near future. Information on copper and aluminum that would be generated by fuel cycle facilities is lacking, but these metals are expected to constitute a small fraction of the scrap metal inventory, which is dominated by ferrous metals.

---

[1] "Potentially cleared" refers to materials with very low levels of residual radioactivity that are likely candidates for clearance.

[2] As of August 2003.

The NRC currently licenses 36 non-power reactors. There are 25.2 t of structural steel and 88 t of rebar in the reference 1,100 kW non-power reactor. The total mass of activated steel and aluminum is 1.6 t. Components with significant surficial activity include the aluminum reactor vessel, with a mass of 900 kg, and various steel components with a total mass of about 45 t. The mass of concrete in the reference non-power reactor is 1,925 t, of which about 90% is clean.

As discussed in Section 1.1 of the main report, mass-to-surface ratios of cleared materials are used to relate normalized mass-based doses to normalized surficial doses. These ratios are in turn based on the mass-to-surface ratios of individual components. The mean mass-to-surface ratio of potentially cleared ferrous metals from nuclear power plants is about 5 g/cm^2.

A.1.1 Types of Material

The emphasis of the materials inventory analysis is on ferrous metals, copper, aluminum, and concrete, since these materials constitute most of the mass of potentially cleared materials. To the extent that data are available in the published literature, the total mass of each these four types of materials is sub-divided into four broad categories based on expected activity levels as follows:

- **Radioactive** – systems, subsystems, components, and structures with significant levels of radioactivity. Neutron-activated items are included in this category. Typically, these materials are so radioactive that cleanup to clearance levels is not technically and/or economically practicable.

- **Suspect** – subsystems or components not specifically identified as radioactive but which are parts of radioactive systems.

- **Clean** – materials generated from non-impacted areas of a nuclear facility, as defined in "Multi-Agency Radiation Survey and Site Investigation Manual (MARSSIM)" (NRC 2000e).[3] Such material is also referred to as non-impacted material.

- **Potentially cleared** – the balance of materials in the facility. For nuclear power reactors, this is the largest category of materials and is the focus of this appendix.

A.1.2 Scope of Licensed Community

As reported in the June 2003 "Information Digest" (NRC 2003b), facilities licensed by NRC include:

- Commercial nuclear power reactors (as of December 2002) 104

[3] Non-impacted areas have no reasonable possibility (extremely low probability) for residual radioactivity in excess of natural background or fallout from the worldwide testing of nuclear weapons (NRC 2000e).

- Non-power nuclear reactors[4] 36

- Fuel cycle facilities
  - Uranium fuel fabrication plants (6 licensed to operate plus 1 in decommissioning) 7
  - Uranium hexafluoride production plant (1 licensed plus 1 in decommissioning) 2
  - Gaseous diffusion plants 2
  - Uranium mills and leaching operations[5] 22
  - Independent spent fuel storage facilities (Keegan 2003) 28
  - By-product materials storage site 1

- Materials licensees . . . . . approximately 4,800

In addition, there are approximately 16,600 materials licenses issued by 32 Agreement States (NRC 2003b). Some of the materials licenses issued by the NRC to other government agencies (i.e., Department of the Air Force, Department of the Navy, and Department of Agriculture) are Master Materials Licenses. Numerous permits or sub-licenses are issued by the master licensee under these Master Licenses.

The number of licenses cited here was the number as of 2002–2003; however, this number is in a constant state of flux. In addition, the dates of license termination are subject to change, as licenses are terminated early or renewed for an additional period. For example, some commercial nuclear power reactors have received license renewals for an additional 20 years beyond the 40-year span of the original operating licenses. A number of other renewal applications are pending.

A.2 Commercial Nuclear Power Reactors

This section presents analyses of material inventories for a reference BWR and a reference PWR. Section A.2.1 summarizes regulatory decommissioning options. Section A.2.2 discusses scaling factors used to adjust the materials inventories of the reference reactors to other reactor sizes. Sections A.2.3 and A.2.4 describe a reference BWR and a reference PWR in terms of materials inventories and expected activity levels. Section A.2.5 presents anecdotal data on clearance.

A.2.1 Decommissioning Policies

With the publication of the NRC's Decommissioning Rule in June 1988 (NRC 1988), owners and/or operators of licensed nuclear power plants were required to prepare and submit plans and cost estimates for decommissioning their facilities to the NRC for review. Decommissioning, as defined in the rule, means to remove nuclear facilities safely from service, and to reduce

[4] Since 1958, 73 licensed non-power reactors have been decommissioned.

[5] NRC 2003a. Does not include numerous Agreement State licensees nor two sites under general license to DOE for long-term care.

radioactivity to a level that permits release of the property for restricted and unrestricted use and termination of the license. The decommissioning rule applies to the site, buildings, and contents and equipment.

Historically, the NRC has established three classifications for the decommissioning of nuclear facilities (NRC 2000b):

- **DECON** is the alternative in which "the equipment, structures, and portions of a facility and site that contain radioactive contaminants are removed or decontaminated to a level that permits termination of the license after cessation of operations."

- **SAFSTOR** is the alternative in which "the facility is placed in a safe, stable condition and maintained in that state until it is subsequently decontaminated and dismantled to levels that permit license termination. During SAFSTOR, a facility is left intact, but the fuel has been removed from the reactor vessel and radioactive liquids are drained from systems and components and then processed. Radioactive decay occurs during the SAFSTOR period, thus reducing the levels of radioactivity in and on the material, and potentially the quantity of material that must be disposed of during decommissioning and dismantlement." Activities under the SAFSTOR alternative must be completed within 60 years after shutdown.

- **ENTOMB** is the alternative in which radioactive structures, systems, and components are encased in a structurally long-lived substance, such as concrete. "The entombed structure is appropriately maintained and continued surveillance is carried out until the radioactivity decays to a level that permits termination of the license."

A.2.2 Scaling Factors for Commercial Nuclear Power Reactors

The methodology used to develop the scaling factors is described by Anigstein et al. (2001, Section A.5.2.1), as cited below:

> It is reasonable to assume a correlation between a plant's power rating and its material inventory. By this means, data on reference PWRs and BWRs can be utilized to estimate inventories for the industry at large. In reports prepared for the DOE, Argonne National Laboratory (ANL) employed a scaling method based on the mass of PWR and BWR pressure vessels . . . . ANL assumed that all metal inventories for both PWRs and BWRs can be calculated from those at the corresponding reference plant based on the design power, as follows:
>
> $$M = M_r \left(\frac{P}{P_r} \right)^{\frac{2}{3}}$$
>
> M = mass of metal (e.g., carbon steel) in actual reactor
>
> M_r = mass of same metal in reference reactor
>
> P = power rating of actual reactor (MWe)

P_r = power rating of reference reactor

The quantity $\left(\frac{P}{P_r}\right)^{\frac{2}{3}}$ is referred to as the scaling factor for nuclear power reactors.

A complete listing of U.S. operating commercial nuclear power reactors, together with the shutdown date established by their operating license, is included in NRC 2003b. We apply scaling factors to adjust the quantities of materials expected in reactors with various design power levels.

NRC 2003b also lists commercial nuclear power reactors that were formerly licensed but have been shut down. Reactors whose owners have chosen the ENTOMB decommissioning alternative and those with the DECON alternative that have largely completed decommissioning are excluded from the present analysis. The three non-light-water reactors in SAFSTOR are included with BWRs in the present analysis.

Pertinent information on scaling factors presented by Anigstein et al. (2001) is summarized in Table A.1.

A.2.3 Mass of Materials in Reference BWR

As of December 2001, there were 35 BWRs with NRC operating licenses (NRC 2003b). In addition, the NRC lists 9 BWRs formerly licensed to operate; many of these are low-power units (i.e., < 200 MWt).

Table A.1 Nuclear power reactor scaling factors

Reactor type	No. of reactors	Cumulative scaling factor
Operating PWRs	69	65.86
Shutdown PWRs	8	6.09
Operating BWRs	35	32.33
Shutdown BWRs	9	1.92

A.2.3.1 General BWR Description

In the late 1970s and early 1980s, the NRC commissioned a series of studies on the technology and costs of decommissioning several types of nuclear facilities. A generic or reference design was selected for each facility studied. Designs for both a reference PWR and a reference BWR were developed. The reference BWR is based primarily on the description of the 3,320 MWt (1,155 MWe) Washington Public Power Supply System (WPPSS) Washington Nuclear Project 2 presented by Oak et al. (1980a, 1980b) and Smith et al. (1994a, 1994b).[6]

[6] Now the Northwest Energy Columbia Generating Station.

The primary purpose of the revised analysis by Smith et al. (1994a, 1994b) was to reevaluate estimated costs and schedules for license termination of the reference BWR. This re-evaluation was designed, in part, to reflect the requirement that spent fuel must be cooled in the reactor pool for about 5 years before being accepted by DOE for dry storage (Smith et al. 1994a). For reactors where DECON was the selected decommissioning alternative, the following schedule was assumed:

- Pre-shutdown planning–engineering and regulatory reviews – 2.5 years
- Plant deactivation, chemical decontamination, removal of reactor pressure vessel internals, and systems lay-up – 1.2 years
- Safe storage of laid-up plant, spent fuel pool storage operations, preparation for active decommissioning activities — 3.4 years
- Plant dismantlement – 1.7 years

The reference BWR consists of three principal buildings with radioactive systems or components: the Reactor Building, the Turbine Generator Building, and the Radwaste and Control Building (Oak et al. 1980a, pp. 7-6 to 7-9). Several additional buildings make up the reference BWR complex. These include the Diesel Generator Building, Service Building, Circulating Water Pump House, Spray Pond Complex, Makeup Water Pump House, the yard, and other buildings (i.e., Office Building, Warehouse, Guard House, and Gas Bottle Storage Building). These buildings are assumed to be non-impacted.

Oak et al. (1980a and 1980b) assume that the reference BWR would be decontaminated prior to dismantlement, but do not assume clearance of any residually radioactive materials. All major components, including the turbines and condenser, are assumed to be buried as LLRW.

The reports on the reference BWR do not address all the materials in the plant. Consequently, we need to construct a summary of such materials from information scattered throughout the two reports addressing the reference BWR (Oak et al. 1980a , 1980b, and Smith et al. 1994a, 1994b). These reports contain considerable information on ferrous metals, some information on concrete, limited information on aluminum, and no specific information on copper.

Summary information on the structural materials used in the reference BWR, including concrete, structural steel, and rebar, is provided by Oak et al. (1980b, Table C.2-1) and is presented in Table A.2 of the present report. Smith et al. (1994a, Appendix H) present related information. While the latter data are similar to those of Oak et al. (1980b), some differences exist. The data of Oak et al. (1980b) are used here, since that data set is more complete.

Table A.2 Estimated quantities of structural materials in the reference BWR facility

Structure	Concrete (m^3)	Rebar (t)	Structural steel (t)
Reactor Building	42,804	8,608	902
Primary Containment	1,225	187	693
Turbine Generator Building	46,672	4,717	742
Radwaste and Control Building	26,697	2,746	372
Diesel Generator Building	2,964	408	0
Service Building	2,359	151	395
Circulating Water Pump House	2,963	321	112
Spray Pond Complex	8,321	789	0
Makeup Water Pump House	1,278	163	0
Yard and Other Buildings	12,825	247	91
Total[a]	147,880	18,351	3,307

Source: Oak et al 1980a, Table C.2-1

[a] Total concrete and rebar as listed by Oak et al. (1980a) does not correspond to sum of masses listed in table.

In the present analysis, *only* the Reactor Building (including primary containment), the Turbine Generator Building, and the Radwaste and Control Building are assumed to contain radioactive systems or components (Oak et al. 1980a, Table 7.3-3).

A.2.3.2 Ferrous Metals in Reference BWR

A summary of the ferrous metals in the reference BWR is presented in Table A.3, based on information on the reference BWR (Oak 1980a , 1980b, and Smith et al. 1994a , 1994b).

Masses of most of the systems in Table A.3 are listed by Anigstein et al. (2001, Tables A.32 – A.64). These data were primarily derived from data listed by Smith et al. (1994b, Table C.5). Some of the data presented by Anigstein et al. have been adjusted in the course of the present analysis.

Table A.3 shows that about 34 kt of components and systems composed of ferrous metals have been identified in the reference BWR.

Neutron-Activated Ferrous Metals in Reference BWR

The masses of the neutron-activated ferrous metal (carbon and stainless steel) components are summarized in Table A.4.

Table A.3 Summary of ferrous metals in reference BWR

Location	System	System mass (kg)
Reactor Building	Containment instrument air	6,996
	Control rod drive	219,442
	Equipment drain processing	52,631
	Fuel pool cooling & cleanup	343,121
	High pressure core spray	46,295
	HVAC components	58,162
	Low pressure core spray	20,799
	Main steam[a]	3,894,143
	Main steam leakage control	2,125
	Misc. Items from partial system	67,399
	Closed cooling water	42,321
	Equipment & floor drains	9,943
	Reactor core isolation cooling	21,554
	Reactor water cleanup	47,520
	Residual heat removal	306,401
	Misc. drains	7,650
	Piping (non-primary containment)	348,122
	Piping (primary containment)	838,180
	Primary containment	693,000
	Steam dryer	41,277
	Steam separator	33,929
	Steam separator (highly radioactive segment)	15,436
	Core shroud	37,694
	Top fuel guide	5,429
	Jet pumps	5,683
	Support ring	2,359
	Core support plate	9,298
	Orificed fuel supports	5,366
	Control room guides	9,549
	Limiters, housings	43,967
	Shroud support	44,906
	RPV upper flange	55,221
	RPV upper head	29,602
	RPV lower flange	54,514
	Non-activated RPV wall	255,111
	Activated RPV wall	161,210
	Lower head	110,922
	Nozzles	59,139
	Studs & nuts	31,481
	Skirt, base ring, & collar	61,350
	Sacrificial shield, steel only	77,364
	Subtotal	8,176,611

Table A.3 Summary of ferrous metals in reference BWR

Location	System	System mass (kg)
Radwaste Building	Chemical waste processing	59,803
	Condensate demineralizers	89,783
	HVAC components	102,751
	Radioactive floor drain processing	31,237
	Building drains	3,897
	Standby gas treatment	40,588
	Sample systems	1,148
	Piping	165,927
	Subtotal	495,134
Turbine Building	Feed & condensate	1,592,118
	Extraction steam	115,710
	Heater vents & drains	198,775
	HVAC components	76,393
	Offgas (augmented)	64,483
	Recirculation	120,536
	Building drains	4,730
	Piping	1,176,074
	Subtotal	3,348,819
Total Plant	Small pipe hangers[b]	282,366
	Large pipe hangers[b]	802,872
	Rebar	18,351,000
	Structural steel (less primary containment)	2,614,000
	Subtotal	22,050,238
Grand Total		34,070,802

[a] Some Main Steam System components in Turbine Building

[b] Bierschbach 1996

Table A.4 Neutron-activated ferrous metal components in reference BWR

Component	Mass (kg)
Steam separator	15,436
Core shroud	37,694
Top fuel guide	5,429
Jet pumps	5,683
Core support plate	9,298
Orifice fuel supports	5,366
Control rod guides	9,549
Activated RPV wall–cladding	161,210
Sacrificial shield (steel only)	77,364
Total	327,029

Source: Smith et al. 1994b, Table E.4

Ferrous Metal Equipment and Piping with Activity on Internal Surfaces

Activities will be present on internal surfaces of piping and components in the reactor system, particularly those exposed to reactor cooling water. Oak et al. (1980b, Tables E.2-6 and E.2-7) used the following methodology to develop the activity estimates for these items:

- The surface area of components expected to have internal surface activity was estimated.
- Activity deposition levels were developed, based on operational exposure.
- Five deposition levels, ranging from 5 Ci/m^2 (18.5 MBq/cm^2) for tanks and equipment containing concentrated waste to 5 $\times 10^{-4}$ Ci/m^2 (185 Bq/cm^2) for the turbine, were selected by the authors as representative of the range of expected activity levels.
- Total deposited activity was calculated as the product of the surface area and the assumed deposition level.

A summary of identified components with internal surface activity is presented in Table A.5. The total mass of the components in the table is about 3 kt less than the amount in Table A.3 for those systems with identified internal activity, due to lack of sufficient information to enable us to associate mass with activity for all listed components and systems.

Many of the systems and components in Table A.5 will also have activities on external surfaces. The activity on external surfaces is about 1% of the activity on internal surfaces (Oak et al. 1980b, Table E.2-10).

Ferrous Metals with No Detectable Levels of Residual Radioactivity

A large fraction of the total ferrous metals in the reference BWR are assumed to have no detectable levels of residual radioactivity. The structural metals and rebar from Table A.2 are classified according to MARSSIM screening classifications (NRC 2000e), based on the engineering judgment of the present authors (see Table A.6).

A.2.3.3 Concrete in the Reference BWR

As indicated in Table A.2, the reference BWR contains about 148,000 m^3 of concrete. Assuming a density of 2.4 g/cm^3, the concrete mass is estimated to be 355 kt. Of this material, 79% is associated with the Reactor Building (including primary containment), the Turbine Building, and the Radwaste and Control Building, with the balance (30,710 m^3) being distributed over non-impacted support buildings.

Table A.5 Mass of components with activities on internal surfaces in reference BWR

Location	System	Component	Mass (kg)
Reactor Building	Equipment drain processing	Spent Resin Tank	657
		Waste Collector Tank	10,229
		Waste Surge Tank	18,282
		Waste Sample Tanks	13,920
	Fuel pool cooling & cleanup	Fuel Pool HX	4,076
		Skimmer Surge Tanks	10,708
	Main steam	Turbine Bypass Valve Assembly	5,266
		Moisture Separator Reheaters	416,772
		Steam Evaporator	26,944
		Gland Steam Condenser	1,816
		Main Condenser	1,570,000
		Main Turbine	1,338,372
	Closed cooling water	RBCCW Heat Exchangers	22,380
	Reactor water cleanup	RWCU Non-Regenerative HX	8,172
		RWCU Regenerative HX	12,394
		Cleanup Phase Separator Tanks	4,086
	Residual heat removal	RHR HX	58,380
	Pressure vessel and internals	All items with surficial activity	823,778
Radwaste Building	Chemical waste processing	Distillate Tanks	10,048
		Decon Solution Concentrator Tanks	1,422
		Detergent Drain Tanks	3,668
		Chemical Waste Tanks	10,048
		Decon Solution Concentrators	6,810
	Condensate demineralizers	Condensate Backwash Receiver Tank	6,912
		Condensate Phase Separator Tanks	6,356
	Radioactive floor drain processing	Floor Drain Collector Tank	10,229
		Floor Drain Sample Tank	6,960
		Waste Sludge Phase Separation Tank	5,490
	Feed & condensate	Condensate Storage Tanks	100,950
		High & Low Pressure Feed Water Heaters	883,896
		Air Ejector Condensers	13,228
	Heater vents & drains	Moisture Separator Drain Tanks	3,430
		Reheater Drain Tanks	29,632
		Steam Evaporator Drain Tanks	1,796
	Piping	Piping <60 mm o.d.	68,289
		Piping >60 mm o.d.	2,460,014
Total			7,975,410

Oak et al. (1980a , 1980b) and Smith et al. (1994a, 1994b) assume that all concrete surfaces (except those expected to be neutron-activated) will be vacuumed after shutdown to remove any loose radioactive debris. The surfaces will be surveyed to detect any significant radioactivity. Areas with detectable activity will then be washed using high-pressure water jets and resurveyed

to identify regions that are still radioactive. Such areas will then be scabbled to a nominal depth of 1 inch to remove this surface activity. Smith et al. (1994a, Table 3.20) estimate that the following volumes of concrete would be removed by scabbling:

- Reactor Building . . . . . 36.9 m^3
- Turbine Generator Building . . . . . 3.50 m^3
- Radwaste and Control Building . . . . 11.0 m^3

Table A.6 MARSSIM classification of rebar and structural steel in reference BWR

Facility	Rebar		Structural steel	
	Mass (t)	Classification[a]	Mass (t)	Classification[a]
Reactor Bldg.	8,608	Class 3	902	Class 2
Primary Containment	187	Class 2	693	Class 2
Turbine Generator Bldg.	4,717	Class 3	742	Class 3
Radwaste & Control Bldg.	2,746	Class 3	372	Class 2
Diesel Generator Bldg.	408	Non-impacted	0	Non-impacted
Service Bldg.	151	Non-impacted	395	Non-impacted
Circ. Water Pump House	321	Non-impacted	112	Non-impacted
Spray Pond Complex	789	Non-impacted	0	Non-impacted
Makeup Water Pump House	163	Non-impacted	0	Non-impacted
Yard & Other Bldg.	247	Non-impacted	91	Non-impacted
Total	18,351[b]		3,307	

[a] Assumed MARSSIM classification

[b] Total rebar as listed by Oak et al. 1980a does not correspond to sum of masses listed in table.

Oak et al. (1980a, Table 7.3-3) assumed that about 700 m^3 of concrete rubble would be generated. Detailed support for these estimates is provided by Oak et al. (1980b, Appendix D) . Oak et al. (1980a) assumed that concrete would be scabbled to a depth of 2 in (0.051 m). The more recent results of Smith et al. (1994a) are used here for estimating scabbled masses.

The neutron-activated reinforced concrete in the sacrificial shield (biological shield) has an estimated volume of 73.3 m^3 (Oak et al. 1980b, Table E.1-6). This is a small fraction of the total of 1,225 m^3 concrete in the Primary Containment (see Table A.2).

Because of the nature and the levels of activity, all of these scabbled or neutron-activated materials will be buried as LLRW. However, most of the concrete could be potentially cleared.

A.2.3.4 Copper and Aluminum in the Reference BWR

No substantive information on the quantity of copper in the reference BWR was located during this study. Limited anecdotal information is provided in Section A.2.3.5. Consequently, the total quantity of copper in the reference BWR is assumed to be 694 t, the same as in the reference PWR (see Table A.10). The amounts of clean and potentially cleared copper are also assumed to be the same as in the reference PWR.

The only aluminum components specifically identified in the reference BWR are piping (Oak et al. 1980b, Tables C.3-7, C.3-9, and C.3-10). The mass of this piping is summarized in Table A.7.

Table A.7 Estimated mass (kg) and total activity (Ci) of aluminum piping in reference BWR

Quantity	Outside diameter (mm)		
	< 60	73 – 254	305 – 406
Mass in Reactor Building	—	1,020	—
Mass in Turbine Building	1,712	23,449	12,716
Mass in Radwaste Building	288	17,841	920
Total mass	2,000	42,310	13,636
Total activity[a]	0.4	3.54	0.7

[a] Source: Oak et al. 1980b, Table E.2-5

This table indicates that about 4.6 Ci (170 GBq) of activity is associated with about 58 t of aluminum piping. Based on this activity level, the material in Table A.7 is assumed to be disposed of as LLRW.

Since no additional details on the quantities of aluminum in the reference BWR were found during the course of the present study, we assume that the masses of clean and potentially cleared aluminum are the same as in the reference PWR (see Section A.2.4.2).

A.2.3.5 Reference BWR Mass Summary

Summary information on the masses of materials and their presumed categories are presented in Table A.8. Materials designated as clean are from non-impacted areas as defined by MARSSIM. Materials that are potentially cleared are arrived at by subtracting clean, surficially radioactive, suspect, and activated materials from the total mass.

Table A.8 Mass summary for reference BWR

Category	Material mass (t)			
	Concrete[a]	Ferrous metals	Aluminum	Copper
Activated	176	327	N/A	N/A
Surficially radioactive	123	8,668	58	N/A
Suspect	0	3,025	N/A	52
Potentially cleared	281,000	19,374	2	62
Clean	73,700	2,677	10.7	580
Total	355,000	34,071	70.7	694

N/A - not available

[a] Based on concrete density of 2.4 g/cm^3

The following discussion presents greater detail on the source of the ferrous metals masses in Table A.8.

- Total mass of ferrous metals (Table A.3) . . . . . 34,071 t
- Clean, i.e., non-impacted rebar and structural steel (Table A.2 and Table A.6) . . . . . 2,677 t

  It should be noted that the quantities of non-impacted rebar and structural steel are based on the assumption that all buildings except the Reactor Building, the Primary Containment, the Turbine Generator Building, and the Radwaste and Control Building would be non-impacted, as defined by MARSSIM. Other assumptions are plausible. For example, it might be reasonable to classify most, or all, of the rebar in the Turbine Building as non-impacted. This would increase the clean material to 7,394 t.

- Neutron-activated (Table A.4) . . . . . 327 t

- Mass with activity on internal surfaces (Table A.5) . . . . . 7,975 t

- Primary Containment (activity on external surfaces) (Tables A.6) . . . . . 693 t

- Total mass of systems (most of which have activities on internal surfaces and are therefore presumed to be disposed of as LLRW)[7] . . . . . 11,000 t

- Potentially cleared (34,071 ! 2,677 ! 327 ! 11,000 ! 693) . . . . . 19,374 t

- Potentially cleared (assuming Turbine Building rebar is non-impacted) . . . . . 14,657 t

The potentially cleared material would include the following:

- Rebar . . . . . 11,555 – 6,272 t
- Structural steel . . . . . 2,016 t
- Pipe hangers . . . . . 1,086 t

The principal driver in terms of potentially cleared metal mass is rebar, which makes up more than 50% of the total ferrous metals in the reference BWR (see Table A.3) . Most of this rebar will either be clean ab initio (i.e., because it comes from non-impacted areas), or can be shown to be potentially cleared if the dismantlement plan calls for separation of the rebar from the concrete matrix.

In a decommissioning cost study of the Millstone 1 Nuclear Power Station, a 2,011 MWt BWR in Waterford, CT, TLG Services, Inc., (1999a) estimated that 5,768 tons (5,233 t) of carbon and stainless steels and 555 tons (504 t) of copper would be potentially salvageable from “clean areas of Unit 1.” An additional 8,781 tons (7,967 t) of ferrous metals and 555 tons (504 t) of copper would potentially be cleared by an off-site processor. However, since the electrical output of Millstone 1 was about 600 MW, the TLG materials estimates should be scaled for comparison

[7] Includes all items in Table A.3 except primary containment, structural steel, rebar, pipe hangers, and neutron-activated components.

with the reference reactor estimates, as described in Section A.2.2. Scaled masses of clean and cleared Millstone 1 materials are 7,330 t and 10,782 t, respectively. The scaled TLG estimate of 7,330 t of clean ferrous metal scrap falls within the range 2,677 t to 7,394 t for the reference BWR developed above. The scaled TLG estimate of 10,782 t of free-released scrap is comparable to the estimate of 14,657 t to 19,374 t of potentially cleared ferrous scrap developed for the reference 1,000 MWe BWR. This suggests that the amounts of clean and potentially cleared material from the reference BWR developed in the current study are in reasonable agreement with an independent estimate.

A.2.4 Mass of Materials in Reference PWR

As of December 2002, 69 PWRs had NRC operating licenses (NRC 2003b). In addition, NRC lists 8 PWRs formerly licensed to operate.

A.2.4.1 General Description of Reference PWR

A description of the reference PWR is based on information from a number of literature sources. Bryan and Dudley (1974) estimated the materials inventory of a 1,000 MWe PWR power plant. That plant used run-of-river cooling, and the design features were those that prevailed in 1971. More details of the plant systems and residual levels of radioactivity are taken primarily from reports by Smith et al. (1978a, 1978b) and Konzek et al. (1995a, 1995b). Both reports describe the 3,500 MWt (1,175 MWe) Trojan Nuclear Plant at Rainier, OR, operated by Portland General Electric Company.

Table A.9 lists the estimated quantities of the principal metals used to construct a 1,000-MWe PWR facility. According to Bryan and Dudley (1974), this facility also contained 179,681 t (74,970 m^3) of concrete.

Table A.9 Estimates of metals used to construct a 1,000-MWe PWR facility

Material	Total quantity (t)
Carbon steel	33,000
(Rebar)	(9,600)
(All Other)	(23,000)
Stainless steel	2,100
Galvanized iron	1,300
Copper	690
Bronze	25
Brass	10
Aluminum	18

Source: Bryan and Dudley 1974, except rebar, which is from UE&C 1972.

A detailed breakdown of the various materials within the 1,000 MWe PWR is presented in Table A.10.

Table A.10 Breakdown of materials used in PWR plant structures and reactor systems (t)

System	Carbon steel	Stainless steel	Galvanized iron	Copper	Inconel	Lead	Bronze	Aluminum	Brass	Nickel	Concrete	Silver
Structures–site	**16,519.3**	**28.6**	**814.2**	**33.1**	**0.0**	**33.1**	**0.2**	**1.2**	**2.9**	**0.1**	**146,472**	**0.1**
Site improvements	1,692.9	0.0	17.9	1.5	0.0	0.7	0.0	0.1	0.0	0.0	4,887	0.0
Reactor Building	7,264.2	5.7	301.3	9.3	0.0	0.0	0.0	0.1	0.3	0.0	54,329	0.0
Turbine Building	3,641.2	0.0	196.4	1.6	0.0	0.0	0.1	0.8	1.4	0.0	15,931	0.0
Intake–discharge	333.7	0.0	3.6	0.2	0.0	0.0	0.0	0.0	0.0	0.0	13,215	0.0
Reactor auxiliaries[a]	1,358.7	0.0	109.8	0.8	0.0	0.0	0.0	0.1	0.2	0.0	33,876	0.0
Fuel storage	364.6	21.1	43.4	0.3	0.0	0.0	0.0	0.1	0.1	0.0	7,163	0.0
Miscellaneous buildings	1,864.0	1.8	141.9	19.4	0.0	32.4	0.1	0.1	0.9	0.1	17,071	0.1
Reactor plant equipment	**3,444.9**	**1,154.6**	**5.5**	**50.4**	**124.1**	**4.5**	**0.5**	**5.2**	**0.0**	**0.0**	**982**	**0.0**
Reactor equipment	430.0	275.1	0.0	6.8	0.1	0.0	0.0	0.0	0.0	0.0	136	0.0
Main heat trans. system	1,686.5	202.5	1.6	9.8	124.1	0.0	0.0	0.0	0.0	0.0	732	0.0
Safeguards cool. system	274.2	199.1	1.1	2.9	0.0	0.0	0.1	0.0	0.0	0.0	0	0.0
Radwaste system	35.2	31.9	0.8	0.2	0.0	0.0	0.0	0.0	0.0	0.0	0	0.0
Fuel handling system	82.0	67.0	0.2	0.2	0.0	0.0	0.0	0.0	0.0	0.0	13	0.0
Other reactor equipment	823.5	230.3	1.7	1.5	0.0	4.5	0.4	0.0	0.0	0.0	101	0.0
Instrumentation & control	113.5	148.7	0.0	29.0	0.0	0.0	0.0	5.2	0.0	0.0	0	0.0
Turbine plant equipment	**10,958.3**	**883.2**	**4.7**	**51.4**	**0.0**	**0.0**	**21.5**	**1.2**	**6.9**	**0.0**	**30,506**	**0.0**
Turbine-generator	4,138.7	129.9	0.5	35.2	0.0	0.0	19.7	0.0	0.0	0.0	11,353	0.0
Heat rejection systems	2,501.1	9.1	2.2	3.0	0.0	0.0	0.7	0.0	0.4	0.0	15,143	0.0
Condensing systems	1,359.8	392.3	0.6	1.3	0.0	0.0	0.2	0.0	1.5	0.0	1,282	0.0
Feed-heating system	1,367.8	221.2	0.5	1.2	0.0	0.0	0.3	0.0	3.9	0.0	110	0.0
Other equipment	1,541.3	89.4	0.9	0.7	0.0	0.0	0.5	0.0	1.1	0.0	2,618	0.0
Instrumentation & control	49.8	41.3	0.0	10.0	0.0	0.0	0.0	1.2	0.0	0.0	0	0.0
Electric plant equipment	**965.5**	**0.0**	**431.1**	**556.5**	**0.0**	**6.8**	**2.5**	**4.1**	**0.0**	**0.6**	**1,263**	**0.4**
Switchgear	30.4	0.0	1.4	2.8	0.0	0.0	0.7	0.0	0.0	0.0	0	0.3
Station service equip.	654.1	0.0	8.6	19.1	0.0	6.8	0.7	0.0	0.0	0.0	128	0.1
Switchboards	87.0	0.0	0.0	13.5	0.0	0.0	0.1	4.1	0.0	0.0	0	0.0
Protective equipment	5.9	0.0	0.0	39.0	0.0	0.0	0.5	0.0	0.0	0.0	0	0.0
Structures & enclosure	112.5	0.0	421.1	0.0	0.0	0.0	0.0	0.0	0.0	0.0	1,135	0.0
Power & control wiring	75.6	0.0	0.0	482.2	0.0	0.0	0.5	0.0	0.0	0.6	0	0.0
Miscellaneous equipment	**843.2**	**13.7**	**2.0**	**2.6**	**0.0**	**2.0**	**0.4**	**6.5**	**0.3**	**0.0**	**458**	**0.0**
Transportation & lifting	529.3	0.0	0.0	0.5	0.0	0.0	0.0	0.0	0.0	0.0	0	0.0
Air & water service sys.	232.6	6.0	0.0	1.2	0.0	0.0	0.0	0.0	0.3	0.0	458	0.0
Communications equip.	4.7	0.0	0.6	1.0	0.0	0.0	0.0	0.3	0.0	0.0	0	0.0
Furnishings & fixtures	76.7	7.7	1.4	0.0	0.0	2.0	0.4	6.1	0.0	0.0	0	0.0
Entire plant	**32,731.2**	**2,080.1**	**1,257.4**	**694.0**	**124.1**	**46.4**	**25.1**	**18.2**	**10.1**	**0.7**	**179,681**	**0.5**

Source: Bryan and Dudley 1974

Note: Totals may not add due to rounding

[a] Underlined text identifies equipment or systems expected to be radioactive.

As noted, the 1,000 MWe PWR analyzed by Bryan and Dudley (1974) contained 74,970 m^3 of concrete. This quantity is similar to that for the reference PWR (i.e., 74,278 m^3) presented by Konzek (1995b, Appendix L).

A.2.4.2 Mass of Systems and Components in Reference PWR

This section characterizes the masses of systems and components in terms of their relative activity levels.

Mass of PWR Components with Volumetrically Distributed Activities

Volumetrically distributed activities are dispersed throughout the thickness of a component and cannot be removed by surface decontamination methods. In the present analysis, volumetrically radioactive materials comprises neutron-activated reactor components and structural materials. The reactor vessel and various internal components are assumed to be volumetrically radioactive. In addition, concrete, rebar, and structural steel in the reactor building could also be activated. The total mass of neutron-activated components in the reference PWR is estimated to be 305.7 t (Smith et al. 1978a, Table 7.3-2).

Mass of PWR Systems and Components with Activities on Internal Surfaces

Since the reference PWR studies did not provide correlated data on the masses and activity of systems and components, the Trojan Radiological Site Characterization Report (Portland General Electric 1995) was used as a source for such data. Table A.11 presents data from this report, based on actual samples. In some cases, measurements were not made because of high radiation levels or because of continued operation of certain systems. Of the 58 systems sampled, 23 showed surficial activity levels greater than 1,000 dpm/100 cm^2, and 2 showed low but detectable levels (less than 1,000 dpm per 100 cm^2). The table also indicates the assumed radiological category (class) prior to survey by the Trojan staff.

The total mass of systems with internal surface activities is 8,769,000 lb (3,978 t).

In addition, the Trojan staff characterized the Activities on other systems and components which were not internally sampled because (a) they were included in other assessments, (b) were entirely electrical, or (c) were non-impacted. These are listed in Table A.12.

Radioactive material on the systems listed in Table A.11 consists of both fixed and removable activities. According to Portland General Electric (1995, Section 6.1.2): “the total radioactivity is not expected to be substantially reduced by nonaggressive decontamination methods. Operational experience during activities such as steam generator primary bowl hydrolasing indicated that the radioactivity is tightly adherent to surfaces and will require disposal of the entire component.”

Table A.11 Trojan PWR system characterization data

Class[a]	No. of samples	System name	Weight		Activity[b] (Ci)
			lb	t	
C2	6	Component cooling water	475,874	215.856	GeLi[c]
C1	18	HVAC-fuel & auxiliary buildings	45,800	20.775	>1 k[c]
C1	NS[d]	Spent fuel pool cooling & demineralizer	57,281	25.983	5.6
C1	NS	Spent fuel pool	628,378	285.032	100
C2	5	Condensate demineralizers	18,000	8.165	Clean[e]
		Discharge & dilution	63,505	28.806	<1
C1	NS	Residual heat removal	183,855	83.397	36
C1	NS	Chemical & volume control	534,034	242.238	25
C1	NS	Safety injection & accumulators	493,765	223.972	<1
C1	NS	Control rod drive mechanisms	106,318	48.226	83
C2	8	HVAC-containment	407,328	184.764	>1 k
C2	2	Containment spray	75,252	34.134	>1 k
C1	NS	Steam generators	2,650,448	1202.243	1416
C2	6	SG blowdown	39,449	17.894	>1 k
C1	NS	Reactor coolant pumps	768,400	348.546	134
C1	NS	Reactor coolant system piping	296,460	134.474	221
C1	NS	Pressurizer	195,508	88.682	52.1
C1	NS	Reactor vessel–internals (surface only)	1,286,000[f]	583.330	357.9
C1	2	Hydrogen recombiners	12,600	5.715	>1 k
C2	2	Primary water makeup system	90,006	40.827	>1 k
C1	1	Refueling water storage tank	97,928	44.420	7
C1	NS	Solid radwaste	10,341	4.691	<1
C1	NS	Clean radwaste	110,634	50.184	14
C1	NS	Dirty radwaste	24,116	10.939	<1
C1	NS	Gaseous radwaste	77,261	35.046	<1
C1	NS	Process sampling	3,093	1.403	4
C2	21	Miscellaneous sumps	19,136	8.680	>1 k
		Total	8,770,770	3978.421	
			Volume		
			ft^3	m^3	
C2	2	Startup boiler			Clean
C2	3	Condensate storage–transfer			Clean
C2	2	Condenser & air removal			Clean
C2	9	Condensate			Clean
C2	5	Feedwater system (& AFW)			Clean
C2	2	Extraction steam			Clean
C2	4	Feedwater heaters, vents & drains			Clean
C2	4	SG feed pump turbine drivers			Clean
C2	11	Oily waste & storm drains	1,882	53.29	Clean[e]
C2	1	Degassifier			Clean

Table A.11 Trojan PWR system characterization data

Class[a]	No. of samples	System name	Volume		Activity[b]
			ft^3	m^3	
C2	13	Main steam			Clean
C2	9	Reheat & moisture separators			Clean
I	2	Service water			Clean
I	2	Turbine Building cooling water			Clean
I	1	Process & auxiliary steam			Clean
I	4	HVAC - turbine			Clean
I	2	Circulating water pumps & aux.			Clean
I	2	Misc. gas supply			GeLi
I	4	Chemical injection			Clean
I	13	Main turbine			Clean
N	2	125 V DC	175	4.96	Clean[e]
N	2	480 V AC aux. load centers	5,080	143.9	Clean[e]
N	2	480 V motor control centers	8,426	238.6	Clean[e]
N	1	Lighting panel power supply	7	0.20	Clean[e]
N	5	Domestic water			Clean
N	2	Makeup demineralizer water			Clean
N	6	HVAC - control panel			Clean
N	1	P-250 computer			Clean
N	1	125 V AC preferred instrument	1,400	39.64	Clean[c]
N	2	Communications			Clean
N	1	Annunciators			Clean
N	1	Stator cooling			Clean
N	2	Main generator & excitation			Clean
N	4	Fish rearing facility			Clean

Source: Portland General Electric 1995

[a] C1 – radioactive, C2 – suspect, I – indeterminate, N – non-impacted (clean)

[b] Does not include neutron activation; 1 Ci = 37 GBq
> 1 k – greater than 1,000 dpm/100 cm^2 above background
GeLi – less than 1,000 dpm/100 cm^2 above background but showing activity with highly sensitive GeLi detector

[c] GeLi and >1 k, subsequently reclassified as < 1 Ci (Portland General Electric 2001)

[d] NS – not sampled due to high radiation levels or continued operation

[e] Subsequently reclassified as < 1 Ci (Portland General Electric 2001)

A.2.4.3 Concrete in Reference PWR

Remediation of radioactive structural surfaces is expected to be easier than remediation of reactor piping with activity on internal surfaces. Removable activity can be cleaned up by mopping or wiping the surfaces. Fixed activity on concrete can be removed by scabbling about 1 cm from the exposed surfaces. The volume of radioactive concrete components and the activity on concrete surfaces are presented in Table A.13.

Table A.12 Expected categories of Trojan systems and components not sampled

Class[a]	Description	Reason not sampled[b]
C1	Refueling equipment	A
C1	Containment Building	A
C1	In-core neutron flux monitors	A
C1	In-core temperature monitors	A
C1	Fuel handling & refueling cavity	A
C1	Vacuum cleaners	A
C2	Miscellaneous buildings–structures	A
C2	Turbine & Turbine Auxiliary Building	A
C2	Condensate Demineralizer Building	A
C2	Seismic monitor	A
C2	Fuel & Auxiliary Building	A
C2	Radiation shielding	A
C2	Containment & misc. cranes	A
I	Intake–Discharge & Chlorine Buildings	A
I	Cooling tower structure	A
I	Elevators	A
I	Fuel Building crane	A
N	Technical Support Center Building	A
N	Turbine Building crane	A
N	Condensate demineralizer crane	A
C2	Electric heat tracing power	B
C2	Vibration & loose parts monitor	B
C2	Nuclear instrumentation	B
C2	Radiation monitors	B
N	230 kV switchyard	B
N	12.47 kV startup transformer	B
N	4.17 kV aux. power	B
N	120 V non-preferred Instrument AC	B
N	Computers (other than P-250)	B
N	Feedwater flow & level control	B
N	Feed line isolation actuation	B
N	Auxiliary feedwater autostart	B
N	Engineered safeguards actuation	B
N	Reactor control and protection	B
N	Reactor non-nuclear instrumentation	B
N	ATWS mitigation & actuation	B
N	Transformers & auxiliaries	B
N	250 V DC	B
N	Meteorological equipment	B
N	Welding receptacles	B
N	Cathodic protection	B
N	Vehicle battery charger	B

Table A.12 Expected categories of Trojan systems and components not sampled

Class[a]	Description	Reason not sampled[b]
N	Motor operated doors	B
N	Security system	B
C2	Fire protection	C
C2	DD & DS, dechlorination system	C
I	Instrument & service air	C
I	Emergency diesel generators	C
I	HVAC - miscellaneous buildings	C
I	Sewage treatment	C
I	Turbine steam seal & drain	C
N	Traveling water screens & screen wash	C
N	Chlorination	C
N	Bearing cooling water	C
N	Water pretreatment	C
N	Diesel fuel oil	C
N	HVAC - Admin. Bldg. & Gatehouse	C
N	Lube oil storage & filtration	C
N	Cooling tower makeup & discharge	C
N	Cooling tower acid pump	C
N	Primary containment testing	C
N	Chilled water	C
N	Generator & hydrogen seal oil	C

Source: Portland General Electric 1995

[a] See notes to Table A.11

[b] A – included in other assessments
B – entirely electrical
C – non-impacted (clean)

Table A.13 Volume and activity of Trojan structural concrete components

Building	Volume		Activity	
	ft^3	m^3	mCi	MBq
Containment (floors)	668	18.92	20.4	755
Containment (walls)	2,262	64.05	2.71	100.3
Auxiliary	234	6.63	2.31	85.5
Fuel	176	4.98	1.13	41.8
MSSS–EP[a]	43	1.22	1.36	50.3
Turbine	75	2.12	2.39	88.4
Total	3,461	100.92	30.3	1121

Source: Portland General Electric 1995, Table 7.1

[a] MSSS–EP: main steam support structure–electrical penetrations

Based on the data in Table A.13, the average specific activity, is estimated to be 4.6 Bq/g, assuming a concrete density of 2.4 g/cm^3. This material would most likely be disposed of as LLRW.

The Trojan staff estimates that the volumes in Table A.13 should be increased by an additional 10% to account for radioactivity on ceilings and other non-floor surfaces, and the volumes should be increased by another 10% to account for the possibility that some areas must have more than 1 cm of the surface layer removed. Thus, the net volume removed is 4,184 ft^3 (118.5 m^3). This volume is exclusive of the activated volume in the primary shield wall.

A.2.4.4 Reference PWR Mass Summary

A.2.4.4.1 Ferrous Metals

As noted in Table A.13, there was some activity on containment building walls, but this could be removed by scabbling about 1 cm of material from the radioactive areas. No information is available as to the activity levels of structural steel and rebar in those areas where there are activities on concrete surfaces. In the absence of any specific information, the ferrous metals in these structures are assumed to be clean or easily decontaminated by washing or wiping.

Based on the data listed in Table A.10, reactor plant equipment is expected to be a large source of radioactive materials. This category comprises a total of 4,605 t of ferrous metals (carbon steel, stainless steel, and galvanized iron), compared to the total of 3,978 t reported for the Trojan Nuclear Plant, which is based on radiological surveys (see Table A.11). Based on the clean systems listed in Table A.11, and the systems and components not sampled, as listed in Table A.12, it is reasonable to assume that a significant fraction of the mass of ferrous metals in Table A.10 would be designated as non-impacted (or clean) under MARSSIM. The assumed ferrous metals breakdown for the reference 1,000 MWe PWR and the assumed MARSSIM class for each system or structure are presented in Table A.14.

A reconciliation of the mass of ferrous metals by classification is given below:[8]

- Total mass of ferrous metals (Table A.10) . . . . . 36,069 t

- Clean, i.e., non-impacted rebar and structural steel and equipment (Table A.14) . . . 6,311 t

  The quantities of non-impacted steel are based on the assumption that Electrical Plant Equipment, Miscellaneous Equipment, Site Improvements, Intake–Discharge, and Miscellaneous Buildings would be non-impacted as defined by MARSSIM. Other assumptions are plausible. For example, it might be reasonable to classify most or all of the ferrous metals in the Turbine Building as non-impacted. This would increase the clean material by 3,838 t, to 10,149 t.

[8] Totals may differ from tabulated values due to roundoff

- Neutron-activated (included in radioactive total below) . . . . . 306 t
- Mass of components with activities on internal surfaces (Table A.11) . . . . . 3,978 t
- Total mass of radioactive and suspect systems (most of which have activities on internal surfaces and therefore are presumed to be radioactive and disposed of as LLRW) including Reactor Auxiliaries and Fuel Storage Structures, and Reactor Plant Equipment from Table A.10, and neutron-activated components . . . . . 6,503 t
- Potentially cleared (36,069 - 6,311 - 6,503) . . . . . 23,255 t

Table A.14 Summary of activity levels of ferrous metals in 1,000-MWe generic PWR

System	Mass (t)	MARSSIM class	Category
Reactor plant equipment	3978	Class 1	Radioactive[a]
Reactor plant equipment	627	Class 2	Suspect
Turbine plant equipment	11,846	Class 3	Potentially cleared[b]
Electrical plant equipment	1,397	Non-impacted	Clean
Miscellaneous equipment	859	Non-impacted	Clean
Site improvements	1,711	Non-impacted	Clean
Reactor Building	7,571	Class 2	Potentially cleared[b]
Turbine Building	3,838	Class 3	Potentially cleared[b]
Intake–discharge	337	Non-impacted	Clean
Reactor auxiliaries	1,468	Class 2	Suspect
Fuel storage	429	Class 2	Suspect
Miscellaneous buildings	2,008	Non-impacted	Clean

[a] See Table A.11 for details

[b] Status after washing and/or wiping exposed steel

The mass of potentially cleared ferrous metals in this reconciliation is possibly overstated, as a limited amount of the rebar and structural steel in the reactor building may be activated or have surface activities not readily removable by wiping. Until additional decommissioning experience with large PWRs has been gained, it will be difficult to more accurately estimate the mix of radioactive and clean–cleared metal masses. Based on the reconciliation developed here, it could be expected that the reference PWR containing 36,069 t of ferrous metals would release 6,311 t as non-impacted and clear 23,255 t. The ratio of clean to potentially cleared scrap from PWR decontamination and decommissioning (D&D) could change, depending on the ability to demonstrate that additional items beyond those noted here are clean.

It is unlikely that all the clean and cleared steel from a given nuclear power plant would be introduced into commerce in a single year. The schedule developed in Konzek et al. 1995a allocates 1.7 years for dismantlement, which is the time span adopted for the present analysis. Based on actual dismantlement experience, the actual period is likely to be longer. (A longer period would result in less material being cleared in any one year.)

A.2.4.4.2 Copper

As listed in Table A.10, the reference PWR contains 694 t of copper. If we assume, in a manner analogous to ferrous metals, that copper associated with reactor plant equipment and fuel storage and reactor auxiliaries is radioactive, the mass of radioactive copper is 51.5 t. Copper associated with Electrical Plant Equipment (556.5 t), Miscellaneous Equipment (2.6 t), Site Improvements (1.5 t), Intake–Discharge (0.2 t) and Miscellaneous Building (19.4 t) is assumed to be non-impacted (clean). Thus, the total mass of clean copper is 580.2 t. By difference, the mass of potentially cleared copper is about 62 t. The mass of clean and potentially cleared copper is about 642 t.

A.2.4.4.3 Aluminum

As listed in Table A.10, the reference PWR contains 18.2 t of aluminum. Of this total, 5.4 t is associated with reactor equipment, reactor auxiliaries, and fuel storage and is likely to be radioactive. A total of 10.8 t is associated with Site Improvements, Miscellaneous Buildings, Electric Plant Equipment, and Miscellaneous Equipment. This material is presumed to be clean (non-impacted). The balance—2.0 t—could be potentially cleared.

Concrete

As listed in Table A.10, the reference PWR contains 179,681 t of concrete. Concrete associated with Site Improvements (4,887 t), Intake–Discharge (13,215 t), Miscellaneous Buildings (17,071 t), Electrical Plant Equipment (1,263 t), and Miscellaneous Equipment (458 t) is assumed to be non-impacted. Thus, the total non-impacted (clean) concrete mass is 36,894 t. As discussed previously, 118.5 m^3 of concrete would be scabbled from various surfaces and disposed of as LLRW. Based on a concrete density of 2.4 g/cm^3, this is equivalent to 284 t. By difference, the mass of potentially cleared concrete would be 142,503 t.

Materials Summary

Radiological characterization of all materials in the reference PWR is summarized in Table A.15. It would be expected that most of the activated, surficially radioactive, and suspect materials would be disposed of as LLRW and that most of the potentially cleared material would be released from regulatory control. The clean material would not be subject to regulatory control.

Table A.15 Mass summary for reference PWR (t)

Category	Concrete	Ferrous metals	Aluminum	Copper
Activated	—	306	—	—
Surficially radioactive	284	3,672	—	—
Suspect	—	2,525	5.4	52
Potentially cleared	142,503	23,255	2	62
Clean	36,894	6,311	10.7	580
Total	179,681	36,069	18.1	694

A.2.5 Materials Inventories of Operating Nuclear Power Plants

At the end of 1996, Commonwealth Edison and the National Waste Management Corporation surveyed nuclear utilities to assess generation and management of radioactive scrap metal (Lorenz and Gardner 1997). Responses were received from 19 BWRs and 26 PWRs. Based on these responses, the surveyors concluded that the then-current inventory of large components (e.g., steam generators and turbine rotors) was 5,732 tons (5,200 t), and an additional 1,080 tons (980 t) would be generated in 1997 from the replacement of steam generators at the McGuire and Salem nuclear power plants. In addition, routine generation of radioactive scrap metal from the respondents was expected to be about 2,000 tons (1,800 t) in 1997, and the existing inventory of routine items was 7,955 tons (7,220 t). Approximately 90% of the routinely generated metal is cleared after decontamination, and 10% is disposed of as LLRW. Inferentially, there is a "clean" component of scrap metal, which was outside the scope of the survey.

The steam generators, which typically contain about 100 Ci (3.7 TBq) after a few years of storage, are kept in on-site mausoleums. At the time of the survey, there were 28 PWR steam generators in storage. Thirty-five turbine rotors, each weighing 110 tons (100 t), were also in storage. The rotors have very low levels of residual radioactivity.

A.3 NRC Fuel Cycle Facility Licensees

This section presents a discussion of the nuclear fuel cycle facilities, including uranium mills, UF_6 conversion plants, uranium enrichment facilities, fuel fabrication facilities, and independent spent fuel storage installations.

A.3.1 Uranium Mills

The NRC currently licenses 22 uranium recovery facilities[9] under 10 CFR Part 40, including 16 conventional uranium mills and 6 in-situ leach facilities (NRC 2003a). In addition, several milling sites have been licensed by Agreement States (DOE 1995).

Uranium mills are excluded from the license termination requirements of 10 CFR 20. Most conventional uranium mills have been shut down and are undergoing decommissioning. These facilities would not be significant future sources of materials, since dismantlement will be completed in the near future. One conventional mill is operating and one is on standby status. Since most materials generated during decommissioning are buried in onsite tailings piles or at other approved sites, the quantities of potentially cleared materials from uranium mills are expected to be small.

Similar to the situation of conventional uranium mills, many in-situ leach facilities have been shut down. These shut-down facilities are unlikely to be significant future sources of materials, since dismantlement will be completed in the near future. Of the six in-situ leach facilities

[9] A uranium mill tailings waste disposal facility in South Clive, UT, is also licensed under the regulation.

licensed by NRC, three are operating, one is on standby status, one is being decommissioned, and one is not yet built. Large quantities of materials are not expected to be generated when these facilities are ultimately decommissioned. Radioactive equipment and plastic piping are likely to be disposed of in tailings piles or at other licensed disposal sites.

A.3.2 Uranium Hexafluoride Production Facilities

Commercial U.S. nuclear power reactors are fueled with enriched uranium. This fuel is produced by increasing the concentration of U-235 from 0.7%, the concentration in natural uranium, to about 3%. Prior to the enrichment process, uranium oxide (yellowcake) is converted to gaseous uranium hexafluoride (UF_6).

As shown in Table A.16, the only operating UF_6 conversion facility in the United States is managed by Honeywell in Metropolis, IL. The NRC license for the Honeywell facility is due to expire on June 30, 2005. The Sequoyah Fuels Corporation facility in Gore, OK, was shut down in 1993 and is currently waiting decommissioning. Remediation at the Gore facility is expected be completed in 2007.

Table A.16 Licensed uranium hexafluoride production facilities

Facility	Process	Startup - shutdown	Capacity (MTU/y)[a]	Status
Gore–Sequoyah	Yellowcake to UF_6	1970 - 1993	5,000	Shut down
Metropolis–Honeywell	Yellowcake to UF_6	1959 - 2005	14,000	In operation

[a] Metric Tons of Uranium

A.3.2.1 Reference UF_6 Production Facility

Elder and Blahnik (1981) performed a study of the decommissioning of a reference UF_6 production facility. This reference facility is assumed to have an annual processing rate of 10,000 t of natural uranium. The basis for the reference facility was a combination of then-existing and retired facilities (including both the Gore and Metropolis facilities); no attempt was made to use a single existing facility as the basis of the study.

The reference UF_6 production facility consists of a main building, a solvent extraction facility, a warehouse, a cooling tower, retention lagoons, and other storage areas. The main building is a 55 m × 100 m steel frame structure with 3.8-cm-thick insulated metal siding. The interior walls are constructed of concrete block and sheetrock. The floors are made of heavily reinforced concrete, needed to support equipment. The roof is 3.5-cm-thick insulated corrugated metal deck that is capped with asphalt and gravel. The solvent extraction facility has a steel frame with metal siding and sealed concrete floors.

Material Masses

Elder and Blahnik (1981) provide considerable information on the quantity of ferrous metals and some information on concrete, but no specific information on the quantities of aluminum or

copper within the facility. A condensed summary of the mass of steel contained in equipment within the reference facility is presented in Table A.17.

In addition to steel in equipment, structural steel was used in the construction of the facility. Table A.18 gives an estimate of the mass of structural steel used in the facility, based on building dimensions provided by Elder and Blahnik (1981), and "Structural Steel Weights per S. F. of Floor Area" in R. S. Means 2000 (Section R051-220) for steel frame, one-story manufacturing buildings with a floor load of 18 lbs/ft^2 (88 kg/m^2).

Table A.17 Mass of steel in equipment of UF_6 production facility

Location	Mass (t)
Sampling station	38.2
Wet yellowcake system	28.1
UF_4 slurry processing	11.9
Ore concentrate dissolution	22.0
Solvent extraction	41.3
Uranyl nitrate concentration	33.0
Denitration	32.2
Uranium trioxide to uranium dioxide reduction	80.1
Hydrofluorination	255.7
Fluorination	99.5
Fluorine generation	264.6
Nitric Acid Recovery Area	15.6
Instrument Repair Shop	4.3
Radwaste Room	22.7
Decontamination Facility	5.6
Laundry	4.6
Change Rooms	1.7
Incinerator Facility	16.1
Subtotal	977.2
Piping, ductwork, trays & light fixtures	317.8
Total	1,295.0

Source: Elder and Blahnik 1981, Appendix A

Table A.18 Mass of structural steel in UF_6 production facility buildings

Building	Width (m)	Length (m)	Area (m^2)	Mass (t)	Cleared	
					fraction	Mass (t)
Main Building	55	100	5,500	483.8	0.45	217.7
Solvent Extraction Facility	—	—	377	33.2		14.9
Total			5,877	517		232.7

The reference facility is assumed to have a 12-in-thick (30.5-cm) reinforced concrete slab basemat. The total floor area, as shown in Table A.18, is 5,877 m^2 for a total volume of 1,791 m^3. The mass of the concrete is approximately 4,100 t.

Radioactivity

Table A.19 summarizes the surface activity levels of the equipment after decontamination. Post-decontamination levels on equipment are provided by Elder and Blahnik (1981, Appendix C); equipment weights are provided in Appendix A of that document. The average activity was calculated based on an average specific activity of 1.3 :Ci/g (48 kBq/g) (Elder and Blahnik 1981, Table 7.4-1).

Table A.19 Activity levels of equipment in UF_6 production facility (piping not included)

Range (kg/t)[a]	Average activity		Mass (t)	Percent
	kg/t[a]	Bq/g		
Clean	—	—	135.6	13.9%
0 – 0.1	4.63e-04	0.022	280.7[b]	28.7%
0.1 – 1.0	0.408	19.6	35.5	3.6%
1.0 – 10	3.76	181	442	45.2%
10 – 100	32.3	1,554	79	8.1%
100 – 1000	125	6,013	4.4	0.5%
Total			977.2	100.0%

[a] Kilograms of radioactive material per tonne of equipment

[b] Assumed to be potentially cleared

A.3.2.2 Inventory Summary - UF_6 Production Facilities

Mass of Steel

The mass of steel in the reference facility is 1,295 t in equipment (see Table A.17) and 517 t in structural steel (see Table A.18). The equipment is assumed to be 13.9% clean, 28.7% potentially cleared, and the balance radioactive (see Table A.19). There is no specific information on the fraction of structural steel that would be subject to clearance. However, NRC (1994, Table C.7.1.1) estimates that 45% of the wall area would have residual levels of radioactivity. We therefore assume that 45% of the structural steel would be potentially cleared, with the balance being clean. Any rebar in reinforced concrete is assumed to be clean and would therefore not contribute to the mass of potentially cleared steel.

Mass of Concrete

The reference facility is estimated to contain approximately 4,100 t of concrete in the floor. One half is assumed to be clean and one half potentially cleared (NRC 1994, Table C.7.1.1).

Mass of Copper and Aluminum

No data on the quantities or activity levels of copper or aluminum in UF_6 production facilities were located during the course of the present analysis. The quantities are expected to be small.

Mass of Material Potentially Cleared from Reference Facility

Steel: 232.7 t (Table A.18) + 280.7 t (Table A.19) . . . . . ~513 t

Concrete: 4,100 × 0.5 . . . . . 2,050 t

Scaling from Reference Facility

There are only two UF_6 production facilities in the United States: the shut-down Sequoyah Fuels Corporation facility, with a capacity of 5,000 MTU/y,[10] and the Honeywell facility, with a capacity of 14,000 MTU/y. The reference facility described by Elder and Blahnik (1981) has an annual processing rate of 10,000 MTU/y. Since the combined capacities of the two facilities are 19,000 MTU/y, we apply a scaling factor of 1.9 (19,000 ÷ 10,000 = 1.9) to the reference facility to estimate the mass of cleared materials from the two actual facilities.

A.3.3 Fuel Fabrication Facilities

Fabrication is the final step in the process used to produce uranium fuel. This process converts enriched UF_6 into a solid form of uranium suitable for use in a nuclear reactor. Fabrication of reactor fuel consists of three basic steps: the chemical conversion of UF_6 to UO_2 powder; the ceramic process that converts UO_2 powder to pellets; and the mechanical process that loads the fuel pellets into rods and constructs finished fuel assemblies.

Table A.20 lists the six uranium fuel fabrication facilities currently licensed to operate by the NRC, plus one in decommissioning. This table lists the owner of each facility and its location, current license expiration date, and processing capacity. As shown in the table, the licenses of all fuel fabrication facilities are scheduled to expire by August 2013.

Table A.20 Licensed uranium fuel fabrication facilities

Company	Location	Expires	Capacity (t/y)
CE Nuclear Power, LLC	Hematite, MO	In decommissioning	450
Global Nuclear Fuel - America, L.L.C.	Wilmington, NC	June 2007	1200
Westinghouse Electric Company (BNFL)	Columbia, SC	November 2005	1150
Nuclear Fuel Services, Inc.	Erwin, TN	July 2009	Not provided
Framatome ANP Lynchburg, Inc.	Lynchburg, VA	August 2013	400
BWX Technologies Naval Nuclear Fuel Division	Lynchburg, VA	September 2005	Not provided
Framatome ANP Richland, Inc.	Richland, WA	November 2006	700

[10] Metric Tons of Uranium

A.3.3.1 Reference Fuel Fabrication Facility

A reference fuel fabrication facility was analyzed as part of a series of studies of the technology and costs of decommissioning nuclear facilities funded by the NRC in the late 1970s and early 1980s. A generic or reference design was selected for each facility studied. The reference uranium fuel fabrication facility is based primarily on the Global Nuclear Fuel facility, as described by Elder and Blahnik (1980).

Mass of Materials

Elder and Blahnik (1980) provide considerable information on the quantity of ferrous metals and some information on concrete, but no specific information on the quantities of aluminum or copper within the facility. Table A.21 lists the mass of steel contained in equipment within this facility. This information is condensed from a series of tables prepared by Elder and Blahnik (1980, Appendix A).

In addition to steel in equipment, structural steel is used in the construction of the facility. Table A.22 gives an estimate of the mass of structural steel, based on building dimensions provided by Elder and Blahnik (1980) and "Structural Steel Weights per S. F. of Floor Area" in R. S. Means 2000 (Section R051-220) for steel frame, one-story manufacturing buildings with a floor load of 18 lbs/ft^2 (88 kg/m^2).

The reference facility is assumed to have a 12-in-thick (30.5-cm) reinforced concrete slab basemat. The total floor area, as shown in Table A.22, is 19,475 m^2, for a total volume of approximately 5,940 m^3 and a mass of 14,256 t.

Radioactivity

Table A.23 summarizes the surface activity levels of the equipment after decontamination, as reported by Elder and Blahnik (1980, Appendix C). Appendix A of that document lists the weight of each piece of equipment.

A.3.3.2 Inventory Summary – Fuel Fabrication Facilities

Mass of Steel

The mass of steel in the reference facility is 2,435 t in equipment (see Table A.21) and 1,713 t in structural steel (see Table A.22). As shown in Table A.23, equipment that would be potentially cleared would contain about 1,000 t. There is no specific information on the fraction of structural steel that would be subject to clearance. However, NRC (1994, Table C.7.1.1) estimates that 5% of the wall area would have residual levels of radioactivity. We therefore assume that 5% of the structural steel would be potentially cleared, with the balance being clean. Any rebar in reinforced concrete is assumed to be clean and would therefore not contribute to the mass of potentially cleared steel.

Table A.21 Mass of steel in fuel fabrication equipment

Area	Weight (t)
Powder Warehouse	75.4
UF_6 Cylinder Storage Room	97.0
UF_6 Vaporization Room	107.4
Chemical Areas	294.6
Powder Storage & Feed Room	60.3
Pelletizing Room	49.7
Sintering Room	241.0
Grinding Room	50.7
Rodding Room	310.6
Gadolinia Rod Fabrication	26.4
Uranium Scrap Recovery Room	13.2
Chemical & Metallurgical Analytical Lab	18.7
Process Development Laboratory	67.6
Hot Machine Shop	23.2
Hot Instrument Shop	5.4
Radwaste Room	22.7
Decontamination Facility	5.9
Laundry Room	4.9
Change Room	1.7
Incinerator Facility	16.1
Fluoride Waste Effluent Treatment System	129.4
Nitrate Waste Effluent Treatment System	44.4
Waste Treatment Building	15.6
Excess Equipment Storage Yard	100.2
Radwaste Effluent Treatment System	8.4
Subtotal Equipment	1,790.5
Piping, Ductwork, Trays & Light Fixtures	644.9
Total	2,435.4

Table A.22 Mass of structural steel in buildings

Building	Width (m)	Length (m)	Area (m^2)	Mass (t)	
				Total	Cleared[a]
Main Building	211.0	80.0	16,880	1,484.8	74.2
Uranium Scrap & Powder Storage Addition	47.0	27.0	1,269	111.6	5.6
Chemical Metallurgical Lab Addition	37.0	21.0	777	68.3	3.4
Fluoride Nitrate Waste Treatment Building	19.0	12.0	228	20.1	1.0
Incinerator Building	18.3	12.2	223	19.6	1.0
Boiler	14.0	7.0	98	8.6	0.4
Total			19,475	1,713.0	85.7

[a] Assumes 5% subject to clearance—see text

Table A.23 Activity levels on equipment in reference fuel fabrication facility

Range (kg/t)[a]	Average activity		Mass (t)	Percent
	kg/t[a]	Bq/g		
Clean	—	—	1,137	46.7%
0 – 0.1	0.024	1.17	1,001[b]	41.1%
0.1 – 1.0	0.23	11.0	275	11.3%
1.0 – 10	1.80	86	19	0.8%
10 – 100	13.3	638	2	0.1%
Total			2,435	100.0%

[a] Kilograms of radioactive materials per tonne of equipment

[b] Assumed to be potentially cleared

Mass of Concrete

The reference facility is estimated to contain 14,256 t of concrete in the floor. One half is assumed to be clean and one half potentially cleared (NRC 1994, Table C.7.1.1).

Mass of Copper and Aluminum

No data on the quantities or activity levels of copper or aluminum in fuel fabrication facilities were located during the course of the present analysis.

Mass of Material Potentially Cleared from Reference Facility

Steel: 86 t (Table A.22) + 1001 t (Table A.23) . . . . . 1,087 t

Concrete: 14,256 × 0.5 . . . . . 7,128 t

Scaling from Reference Facility

As shown in Table A.20, the capacities of the seven operating fuel fabrication facilities range from 400 to 1,200 MTU/y. The reference facility described by Elder and Blahnik (1980) has a capacity of 1,200 MTU/y. According to R. S. Means (2000, Section R17100-100, “Square Foot Project Size Modifier”):

> One factor that affects the S. F. (square-foot) cost of a particular building is the size. In general, for buildings built to the same specification in the same locality, the larger building will have the lower S. F. cost. This is due mainly to the decreasing contribution of the exterior walls plus the economy of scale usually achievable in larger buildings.

The source goes on to state that for facilities with a size factor (the actual facility size divided by the reference facility size) of 0.50 or less, the S. F. cost multiplier is 1.1.

Scaling from the reference fuel fabrication facility to specific facilities is based on the capacities of each facility and includes the size multiplier:

$$M_i = M_r \left(\frac{C_i}{C_r} \right) f_c$$

M_i = mass of material in facility *i*

M_r = mass of material in reference facility

C_i = annual capacity of facility *i*

C_r = annual capacity of reference facility
= 1,200 MTU/y

f_c = size multiplier
= 1.1 (C_i # 600 MTU/y)
= 1 (C_i > 600 MTU/y)

The scaling factor was applied to each of the seven facilities listed in Table A.20, as shown in Table A.24. The two facilities for which annual capacities are not listed are assigned capacities equal to the average of the other five facilities.

Table A.24 Scaling factors for uranium fuel fabrication facilities

Company	Capacity (t/y)	Size multiplier (f_c)	Scaling factor
CE Nuclear Power, LLC	450	1.1	0.413
Global Nuclear Fuel - America, LLC	1200	1	1.000
Westinghouse Electric Company (BNFL)	1150	1	0.958
Nuclear Fuel Services, Inc.	780	1	0.650
Framatome ANP Lynchburg, Inc.	400	1.1	0.367
BWX Technologies Naval Nuclear Fuel Division	780	1	0.650
Framatome ANP Richland, Inc.	700	1	0.583
Total			4.621

A.3.4 Uranium Enrichment Facilities

According to NRC (2003b), the Agency regulates the two gaseous diffusion uranium enrichment facilities, which are leased by the United States Enrichment Corporation from DOE. The two facilities are located in Paducah, KY, and Portsmouth, OH. The Portsmouth plant ceased to operate in March 2001—it is currently in cold standby and is not used for enrichment. Once the plants are permanently shut down, control will revert back to DOE. The third U.S. gas diffusion plant, the K-25 enrichment facility in Oak Ridge, TN, remains under DOE control. It has been shut down and is undergoing decommissioning. Clearance of materials generated during dismantlement will be regulated by DOE and is therefore not within the scope of the present analysis.

A.3.5 Spent Fuel Storage Facilities

An independent spent fuel storage installation (ISFSI) is a complex designed and constructed for the interim storage of spent nuclear fuel. Table A.25 lists the dry spent fuel storage system designs that have been approved by the NRC.

Table A.26 lists 19 dry spent fuel storage facilities in operation as of May 2002 (NRC 2002). There is also a single wet storage facility in Morris, Illinois, operated by the General Electric Company. As of August 2003, the number of licensed facilities had increased to 28 (Keegan 2003).

Table A.25 Spent fuel storage system designs

Vendor	Storage design	Model
General Nuclear Systems	Metal cask	CASTOR V/21
Westinghouse Electric	Metal cask	MC-10
NAC International, Inc	Metal cask	NAC S/T
		NAC-C28 S/T
Transnuclear, Inc	Metal cask	TN-24
BNFL Fuel Solutions (Sierra Nuclear Corp)	Metal–concrete cask	VSC-24
Transnuclear West	Concrete module	NUHOMS-24P
		NUHOMS-52B
Holtec International	Metal cask	HI-STAR 100
Holtec International	Metal–concrete cask	HI-STORM 100
Transnuclear Inc.	Metal cask	TN-32
NAC International Inc.	Metal–concrete cask	NAC-MPC
NAC International Inc.	Metal–concrete cask	NAC-UMS
Transnuclear Inc.	Metal cask	TN-68
BNFL Fuel Solutions	Metal–concrete cask	Fuel Solutions

Source: NRC 2000a, 2002

Spent fuel may be stored in either a wet or dry environment; the various techniques include:

- Concrete Casks
- Horizontal Storage Modules (HSM)
- Metal Casks
- Modular Vault Dry Storage (MVDS)
- Pool (Wet) Storage

Ludwick and Moore (1984) developed five reference ISFSIs for the following designs:

- Silo – similar to the Concrete Casks design listed above
- Cask – similar to Metal Casks design listed above, except that these casks are stored indoors
- Vault – similar to MVDS system listed above
- Wet – same as Pool (Wet) Storage listed above

- Drywell — in-ground storage, not currently utilized

Table A.26 Licensed dry spent fuel storage facilities

Reactor name	Utility	Vendor	Model	No. casks[a]
Surry 1, 2	Virginia Electric & Power	General Nuclear Systems and others	TN-32, NAC-128, Castor V-21, X-33, MC-10	84[b]
H. B. Robinson 2	Carolina Power & Light	Transnuclear West	NUHOMS-7P	8[c]
Oconee 1, 2, 3	Duke Energy Company	Transnuclear West	NUHOMS-24P	87[d]
Fort St. Vrain[b]	DOE	FW Energy Applications	MVDS	single vault
Calvert Cliffs 1, 2	Calvert Cliffs Nuclear	Transnuclear West	NUHOMS-24P	120[b]
Palisades	Consumers Energy	BNFL Fuel Solutions	VSC-24	18[c]
			NUHOMS-32PT	1[d]
Prairie Island 1, 2	Nuclear Management	Transnuclear West	TN-40	17[c]
Point Beach 1, 2	Nuclear Management	BNFL Fuel Solutions	VSC-24	17[d]
Davis-Besse	First Energy Nuclear	Transnuclear West	NUHOMS-24P	3[c]
Arkansas Nuclear 1, 2	Entergy Operations, Inc.	BNFL Fuel Solutions	VSC-24	24[c]
			HI-STORM 100	20[d]
North Anna	Virginia Electric & Power	Transnuclear West	TN-32	84[b]
Trojan	Portland General Electric Corporation	BNFL Fuel Solutions	HI-STORM 100 (modified)	36[b]
TMI-2 Fuel Debris	DOE	Transnuclear West	NUHOMS-12T	30[b]
Susquehanna	Pennsylvania Power & Light	Transnuclear West	NUHOMS-52B	26[d]
			NUHOMS-61BT	10[d]
Peach Bottom 2, 3	Excelon Generating Company	Transnuclear Inc.	TN-68	24[d]
Hatch 1, 2	Southern Nuclear Operating Company	Holtec International	HI-STAR 100	3[c]
			HI-STORM 100	15[d]
Dresden 1, 2, 3	Excelon Generating Company	Holtec International	HI-STAR 100	4[c]
			HI-STORM 100	18[d]
Rancho Seco	Sacramento Municipal Utility District	Transnuclear West	NUHOMS-24P	21[b]
McGuire	Duke Power	Transnuclear Inc.	TN-32	10[c]

Sources: NRC 2002, Keegan 2003.

[a] Maximum likely number by end of life of facility

[b] Number approved

[c] Number loaded

[d] Number loaded + number planned, or estimate based on engineering judgement

The design of commercial ISFSIs has evolved greatly since 1984. Therefore, the present study uses only selected information (e.g., wet facility data and some vault data) from Ludwick and Moore (1984). Data for the other ISFSI designs are taken from vendor-prepared documents (including Safety Analysis Reports, etc.) and other sources.

A.3.5.1 Concrete Casks

The ventilated storage cask system (VSC-24) developed by Sierra Nuclear Corporation (now BNFL Solutions, Inc.) is a typical concrete cask design, which stores 24 PWR assemblies in a vertical position. The principal components of the system are a steel multi-assembly sealed basket (MSB), a ventilated concrete cask (VCC), and an MSB transfer cask (MTC). The following discussion is based primarily on information presented by Raddatz and Waters (1996), supplemented with information and data presented by BNFL (2000a, 2000b, 2000c, and 2000d). A diagram of the cask system is shown in Figure A.1. The principal components of the VSC-24 are listed in Table A.27.

The MSB consists of a steel cylindrical shell with a thick shield plug and steel cover plates welded at each end. The shell length is fuel-specific and varies from 4.2 to 4.9 m, the outside diameter is 1.6 m, and the shell thickness is 2.5 cm; the dimensions of the principal VSC-24 components are given in Table A.28. The internal steel basket consists of a welded structure with 24 square storage locations. The basket aids in the insertion of the fuel assemblies, enhances subcriticality during loading operations, and provides structural support during a potential drop accident. The basket is coated with Carbozinc 11 for corrosion protection.

Table A.27 Mass of principal VSC-24 concrete cask components

Component	Material	Mass	
		lb	t
VCC weather cover plate	Steel	1,110	0.504
MSB structural lid	Steel	2,384	1.082
MSB shielding lid – 2.5" plate	Steel	2,003	0.909
MSB shielding lid – sandwich plate	Steel	4,368	1.983
MSB – empty, w/o lids	Steel	21,036	9.550
VCC – empty, w.o. cover plate	Steel liner	23,022	10.452
	Concrete	173,720[a]	78.869
	Rebar	8,133[a]	3.692
	VCC total	204,875	93.013
MTC – empty, w.o. lid	Steel	117,700	53.436
Basepad (per cask)	Concrete	270,000[a]	122.580
	Rebar	11,700[a]	5.312

Source: BNFL 2000a, Table 3.2-1

[a] Estimated for this study, based on component dimensions

The VCC is a reinforced-concrete cask in the shape of a hollow right circular cylinder. The cask has four penetrations for air entry (located at the bottom) and four outlets located at the top. The penetrations are protected from debris intrusion by wire mesh screens. The internal cavity of the cask, as well as the inlets and outlets, are steel lined. After the MSB is inserted, a shield ring is placed over the MSB–VCC gap and the cask weather cover is installed. The VCC height is fuel-specific and varies from 5.0 to 5.7 m. The outer diameter is approximately 3.4 m, and the walls consist of 74 cm-thick concrete and a 4.5 cm-thick steel liner.

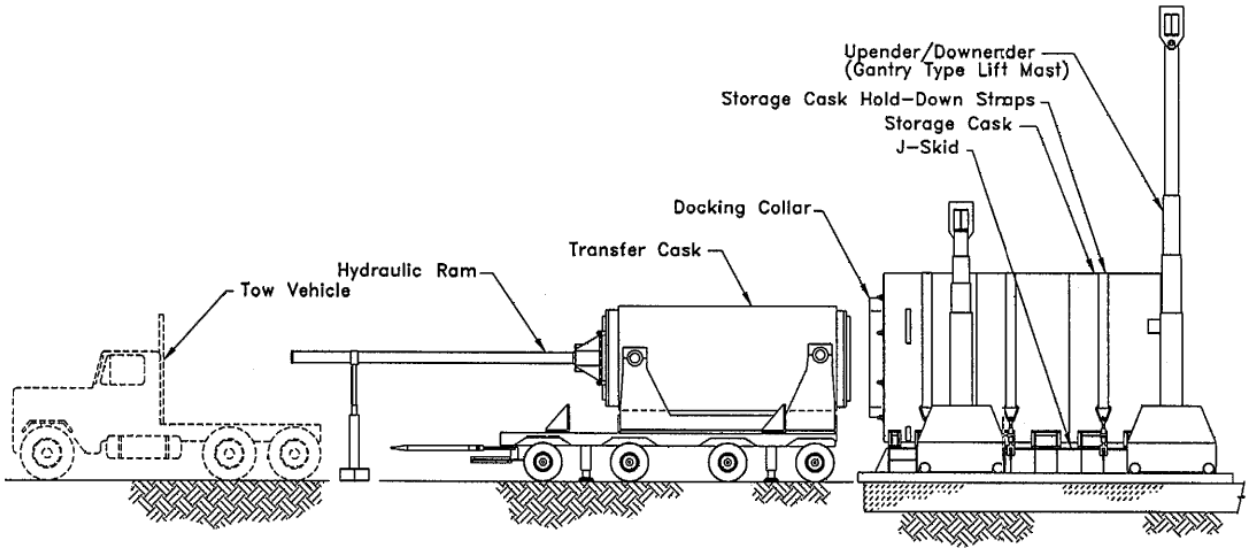

Figure A.1 VSC-24 concrete cask storage system (BNFL 2000b)

Table A.28 Dimensions of principal components of VSC-24 concrete cask

Component	Parameter	Dimension	
		in	cm
Ventilated Concrete Cask (VCC)	Outer diameter	132	335
	Inner diameter	70.5	179
	Concrete thickness	29	74
	Height	197 – 225	500 – 572
	Steel liner	1.75	4.45
Multi-Assembly Sealed Basket (MSB)	Outer diameter	62.5	159
	Length	164 – 192	417 – 488
	Thickness	1	2.5
	Shield lid	9.5	24.1
	Structural lid	3	7.6
MSB Transfer Cask (MTC)	Not found		
Basepad (per Cask)	Length	300[a]	762
	Width	300[a]	762
	Thickness	36[a]	91

Source: BNFL 2000a

[a] Estimated for this study

The MTC is a shielded lifting device with inner and outer structural steel cylinders, which house lead and solid RX-277 neutron shield cylinders designed to reduce radiation from the fuel inside the MSB–MTC. The MTC serves to transfer the MSB from the spent fuel pool (SFP) to the VCC inside the fuel pool building.

A.3.5.2 Horizontal Modular Storage (NUHOMS)

A popular version of a concrete ISFSI is the horizontal modular storage, or NUHOMS (NUtech HOrizontal Modular Storage) system, developed by the Vectra Company (now Transnuclear West Inc.) The standardized NUHOMS-24P/52B is designed to store either PWR or BWR assemblies horizontally in a concrete structure, rather than vertically in a cask, as is the case with the VSC-24. The principal components of the standardized NUHOMS are: (1) a stainless steel, dry-shielded canister (DSC) with an internal fuel basket, (2) a concrete horizontal storage module (HSM) that protects the DSC and provides radiation shielding (overpack), (3) a transfer cask (TC) used to transfer the DSC from the spent fuel pool to the HSM, and (4) a hydraulic ram system (HRS) used to insert the DSC into the HSM and TC. The following discussion is based primarily on information presented by Raddatz and Waters (1996), supplemented with information and data presented by TNW (2000). A diagram of the NUHOMS system is shown in Figure A.2. The mass of principal NUHOMS components is listed in Table A.29. The dimensions of these components are shown in Table A.30.

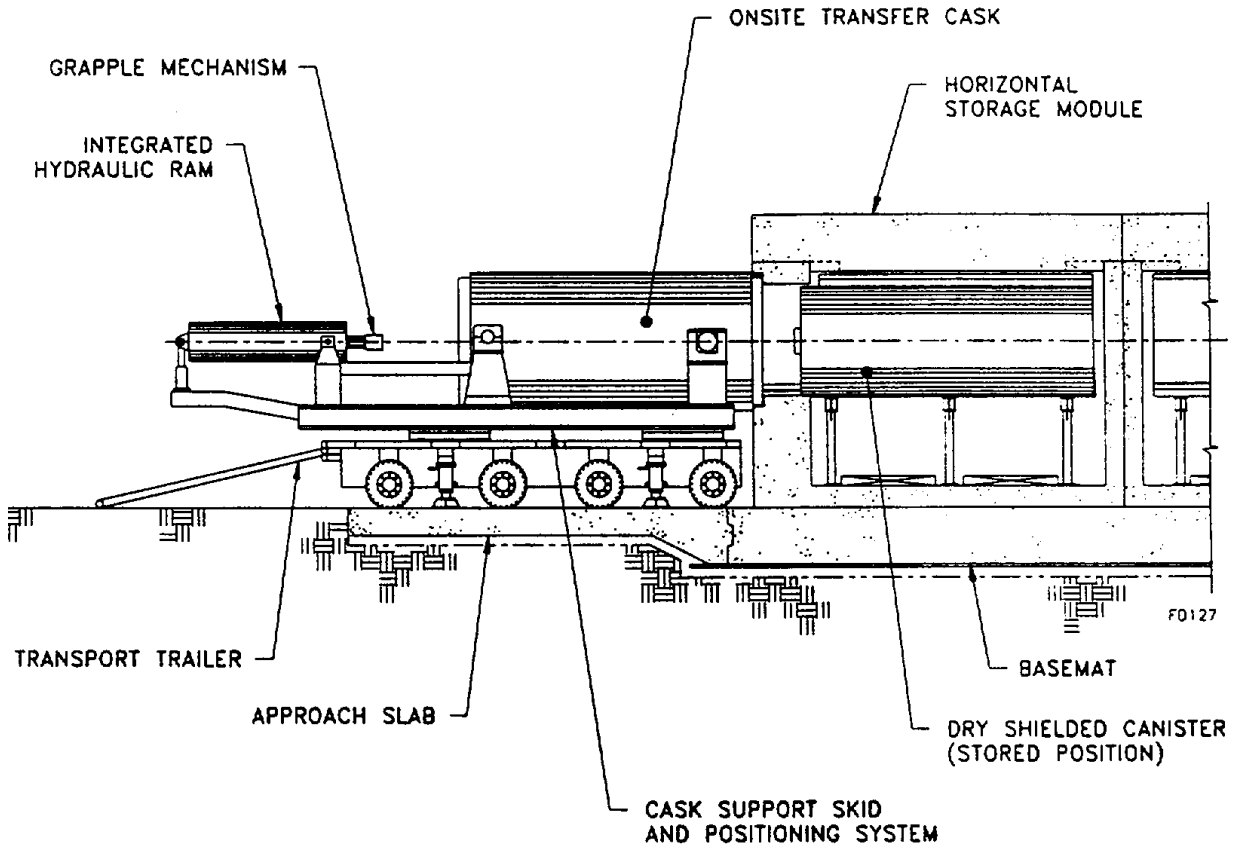

Figure A.2 NUHOMS spent fuel storage system (TNW 2000)

The DSC is designed to provide primary containment for 24 PWR or 52 BWR assemblies. The DSC is a stainless steel cylinder approximately 4.7 m (186 in) long and 0.016 m (0.625 in) thick, with an outside diameter of 1.7 m (67.25 in). Stainless steel end plates and steel end plugs filled with lead are attached to both the top and bottom of the DSC with redundant seal welds. The

canister contains a basket assembly made of 24 or 52 stainless steel guide sleeves. The basket geometry and guide sleeves provide criticality control. The basket assembly for BWR assembly loading has additional neutron-absorbing plates. The lower end of the DSC is coated with a lubricant to reduce friction when it is inserted and removed from the TC and HSM.

Table A.29 Mass of principal NUHOMS components

Component	Material	Mass			
		lb		t	
		PWR	BWR	PWR	BWR
DSC shell assembly	Steel	15,778	15,658	7.157	7.102
DSC top shield plug	Lead	7,859	7,621	3.565	3.457
DSC internal basket	Steel	12,189	12,012	5.529	5.449
DSC top cover plates	Steel	1,934	1,934	0.877	0.877
Horizontal storage module (HSM)	Concrete[a]	226,600	234,900	102.786	106.551
	Rebar[a]	9,852	10,213	4.469	4.633
	Structural steel[a]	6,548	6,887	2.970	3.124
	HSM total	243,000	252,000	110.225	114.307
Transfer cask (TC) w. collar	Steel[a]	74,031	80,441	33.580	36.488
	Lead[a]	33,060	33,060	14.996	14.996
	TC Total	107,091	113,501	48.576	51.484
Basepad	Concrete[a]	77,100	80,500	34.973	36.515
	Rebar[a]	3,352	3,500	1.521	1.588

Source: TNW 2000, Tables 8.1-4 & 8.1-5

[a] Estimated for this study

The HSM is constructed of reinforced concrete, structural steel, and stainless steel. The HSM may be constructed as a single unit or as an array of modules (e.g., 2 × 20). A standardized HSM is approximately 5.8 m long, 4.6 m high, and 2.9 m wide. The concrete walls and roof are about 90 cm thick, and interior walls are about 45 cm thick. The outside wall at the end of a row of HSMs has a thickness of about 60 cm. The HSM structure provides gamma and neutron shielding.

A steel support rail structure anchored by the walls inside the HSM supports the DSC and extends to the access opening. Stoppers on the rails prevent horizontal movement of the DSC during a seismic event. A vertically sliding plate, consisting of thick steel and a neutron-absorbing material, covers the entrance to the HSM and is tack-welded closed once the DSC is in place. Each HSM has two shielded air inlets on the front and two shielded air outlets on the roof.

The TC is used to transfer the DSC from the SFP to the HSM. The TC is approximately 5.2 m long with an inner diameter of 1.7 m. The length can be extended to accommodate BWR assemblies. It consists of three concentric cylinders with shielding material in between, connected by top and integral end plates. The top and bottom end plates are made of steel and a solid neutron shield. The bottom end plate has a removable HRS access-port plug. The TC wall

consists of an inner stainless steel liner, a poured-lead shield, a structural carbon steel shell, a solid BISCO-N3 neutron shield, and an outer carbon steel shell. It is hoisted by the trunnions located on its sides, and mates (via the transfer trailer) with the access opening of the HSM for transfer of the DSC.

Table A.30 Dimensions of principal components of NUHOMS system

Component	Parameter		Dimensions	
			in	cm
DSC Shell Assembly	Outer diameter		67.25	171
	Thickness		0.625	1.59
	Overall length	PWR	186	472
		BWR	196	498
	Length cavity	PWR	167	424
		BWR	177	450
Horizontal Storage Module	Height		180	457
	Width		116	295
	Length	PWR	228	579
		BWR	238	605
	Thickness	Front	30	76
		Side	18	46
		Rear	12	30
		Floor	12	30
		End	24	61
Transfer Cask w. collar	Overall length		205.5	522
	Length cavity		186.75	474
	Outer diameter		85.25	217
	Inner diameter		68	173
	Thickness	Stainless steel	0.5	1.27
		Lead	3.5	8.89
		Carbon steel	1.5	3.81
		BISCO-N3	3	7.62
		Carbon steel	0.125	0.318
Basepad	Width		116	295
	Length	PWR	228	579
		BWR	238	605
	Thickness		36	91

Source: TNW 2000

A.3.5.3 Metal Casks

Metal cask ISFSI designs are available from a number of vendors. The CASTOR system, developed by General Nuclear Systems, Inc. (now a division of Gesellschaft für Nuklear-Behälter, mbH [GNB]), is selected as the reference design for this study. The following

discussion is based primarily on information presented by Raddatz and Waters (1996), supplemented with information and data presented by GNB (2000).

The mass of each principal CASTOR component is listed in Table A.31. The total mass of the cask and basket is approximately 96.5 t, not including the fuel.

Table A.31 Principal CASTOR metal cask components

Component	Material	Mass	
		lb	t
Cask	Steel	180,557	81.901
Basket	Steel	32,052	14.539
Basepad (per cask)	Concrete[a]	110,592	50.165
	Rebar[a]	4,792	2.174

Source: GNB 2000

[a] Estimated for this study, based on data from VEPCO 2000

The CASTOR X/32 is designed to store 32 PWR assemblies in a vertical position. The cask is approximately 4.8 m high and 2.3 m in outside diameter. The dimensions of the principal components of the CASTOR metal cask are listed in Table A.32.

Table A.32 Dimensions of principal components of CASTOR metal cask

Component	Material	Parameter	Dimensions	
			in	cm
Cask body	Carbon steel	Overall length	190.9	485
		Cavity length	163.6	416
		Outside diameter	91.6	233
		Inside diameter	68.1	173
		Wall thickness	11.8	30
		Bottom thickness	7	18
Primary lid	Stainless steel	Thickness	10.2	26
Secondary lid		Thickness	3.15	8.0
Bottom plate		Thickness	1.38	3.5
Moderator rod	—	Thickness	2.76	7.0

Source: GNB 2000

The cask body consists of a ductile cast iron material with a thickness of 30 cm. The top of the cask is sealed with two stainless steel lids bolted onto the cask, using both metallic and elastomeric O-ring seals. The primary and secondary lids are 26 cm and 8 cm thick, respectively. Gamma shielding is provided by the wall of the cask, and neutron shielding is provided by a single row of polyethylene rods incorporated into the cask wall. The inside of the cask and sealing surfaces have a nickel coating for corrosion protection. The internal cavity is filled with helium for heat transfer and corrosion protection. An epoxy resin coating protects the outside surface of the cask. Four trunnions are connected to the cask body for lifting and

rotating the cask. The inside of the cask contains a fuel basket structure comprising 32 square tubes of welded stainless steel, and borated stainless steel plates for criticality control.

A.3.5.4 Modular Vault Dry Store

The Modular Vault Dry Store (MVDS) system, built by Foster Wheeler Energy Applications, Inc., is a concrete vault ISFSI designed to store (in a vertical position) 1,482 high-temperature gas-cooled (HTGC) spent fuel elements, 37 reflector elements, and 6 neutron source elements from the Fort St. Vrain power station, which has been decommissioned. A diagram of the MVDS system is shown in Figure A.3.

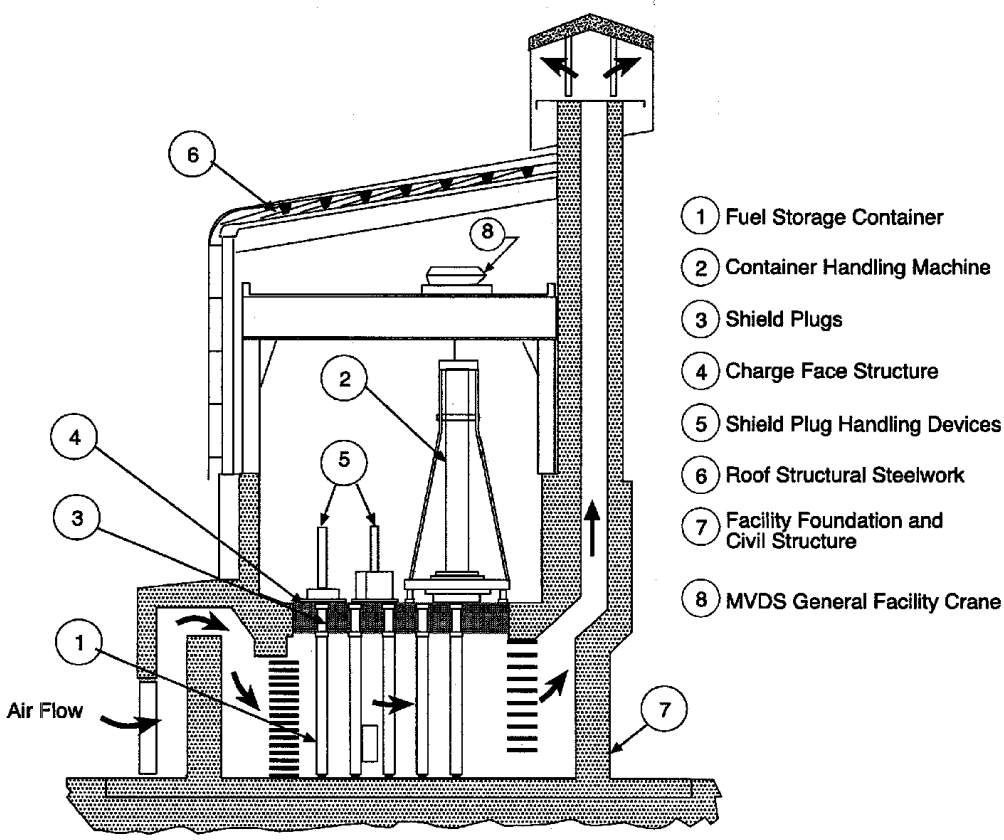

Figure A.3 Modular vault dry storage facility (Raddatz and Waters 1996)

The MVDS system consists of a foundation structure supporting a matrix of six concrete vault modules (VMs), one neutron source storage well, two standby storage wells, six charge face structures (CFSs) forming the roofs over the VMs, and a transfer cask reception bay, with a steel canopy above the structure (Raddatz and Waters 1996). Overall dimensions of the MVDS facility are 44 m long, 22 m wide, and 25 m high. Based on these dimensions and an assumed thickness of the walls and floor of 1.2 m, the concrete in the MVDS is estimated to have a volume of 5,125 m^3 and a mass of about 11,800 t.

A.3.5.5 Pool (Wet) Storage

The only ISFSI to utilize pool or wet storage is General Electric's Morris Operations (GEMO). The GEMO facility was constructed in the late 1960s as a fuel reprocessing plant, but it never operated as such. For the last 18 years, the GEMO has functioned as an ISFSI under NRC license.

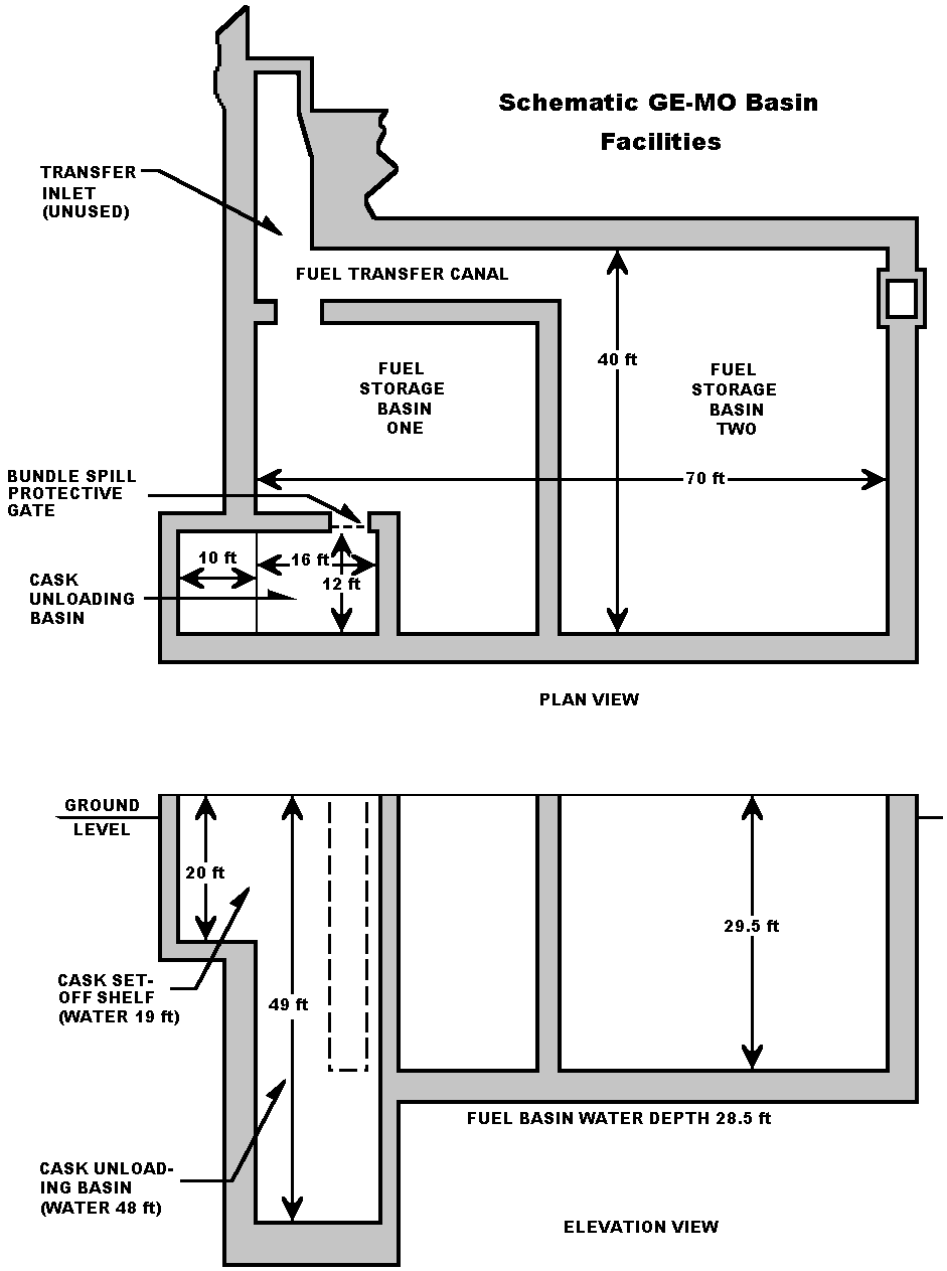

Figure A.4 Pool (wet) storage facility (GE Nuclear Energy 2000)

The main building at GEMO is a massive structure of reinforced concrete, about 62 m by 24 m, and about 27 m above grade. The western end of the building houses most of the fuel storage facilities. This portion of the building is of steel frame and insulated metal siding construction and is attached to the concrete main building. Fuel storage operation areas include:

- Cask receiving area.
- Decontamination area.
- Cask unloading basin.
- Fuel storage basins (illustrated in Figure A.4):
  - Basin 1 has an area of about 84 m^2
  - Basin 2 has an area of about 139 m^2
- Low-level waste evaporator
- Central Alarm Station–Secondary Alarm Station
- Basin water cleanup and cooling system

Fuel bundles are stored in stainless steel basket assemblies designed to protect fuel from physical damage and to maintain fuel in a subcritical configuration. Baskets are locked into grids in the fuel basins to provide seismic restraint. The basins are constructed below ground with stainless steel lined, reinforced concrete walls about 60 cm thick poured in contact with the sides of a bedrock excavation. The south wall of the basin is about 1.2 m thick, because it was intended to stand independent of the surrounding rock to facilitate possible future expansion. Storage basin floors were poured on bedrock and range in thickness from 76 to 140 cm.

The pool storage area is estimated to contain approximately 840 m^3 of concrete, with a mass of approximately 1,940 t. The entire Main Building (including those portions intended for fuel reprocessing) would contain substantially more concrete.

A.3.5.6 Inventory Summary—Spent Fuel Storage Facilities

Steel

The only steel in the spent fuel storage facilities discussed in the preceding sections that would be a likely candidate for clearance is the structural steel in the NUHOMS. All other steel would be either neutron-activated or have high levels of surficial activity, or would be clean material such as rebar. As shown in Table A.29, a NUHOMS used to store PWR fuel contains 3 t of structural steel, while a corresponding BWR module contains 3.1 t.

Concrete

The mass of concrete that could be potentially cleared from each of the five types of spent fuel storage facilities discussed in the preceding sections is listed below.

1. Concrete cask – basepad . . . . . 123 t

2. NUHOMS[11] – horizontal storage module
   a. PWR . . . . . 103 t
   b. BWR . . . . . 107 t

3. Metal cask – basepad . . . . . 50 t

4. MVDS – entire facility . . . . . 11,800 t

5. Wet storage – pool storage area . . . . . 1,940 t

Copper and Aluminum

No data on copper or aluminum in spent fuel storage facilities were found during the course of the present study. The quantities of these metals in the five types of facilities discussed in the preceding sections is judged to be small in comparison to the quantities of steel and concrete.

Scaling from Reference Facility

For concrete casks, NUHOMS, and metal casks, the total mass of material is scaled, based on the number of approved casks of each type at each storage facility (see Table A.26). For modular vault dry storage and pool (wet) storage, the scaling factor is unity, there being only one of each such type of facility.

A.4 Non-Power Reactors

Non-power reactors (NPR) are of many forms, most being either pool or tank reactors. Pool reactors have a core immersed in an open pool of water. The pools typically provide about 20 ft (6 m) of water above the core to allow cooling and radiation shielding. At pool reactors, the operating core and fuel can be observed through the pool water. The core of a tank reactor is in a water-filled tank that is sealed at the top.

Non-power reactors are also categorized by fuel type: plate fuel, TRIGA (Training, Research, Isotopes, General Atomics), or AGN (Aerojet General Nucleonics). Plate fuel consists of several thin plates containing a uranium mixture clad with aluminum formed into an assembly. This geometry promotes efficient heat removal and the ability to provide a high neutron density.

[11] Due to the nature of the facility designs, the concrete in the basepad of the NUHOMS is assumed to be clean.

TRIGA fuel is in the shape of rods and consists of a uranium and zirconium hydride mixture. AGNs are compact, self-contained, low-power (< 5 watts) tank-type reactors. The 10-in (25-cm) diameter core consists of uranium oxide powder embedded in a polyethylene moderator.

Table A.33 lists the currently licensed non-power reactors.

A.4.1 Reference Non-Power Reactor

A research reactor is defined in 10 CFR 170.3 as a reactor licensed for operation at a thermal power level of 10 MW or less, and which is not a testing facility. All but two of the reactors listed in Table A.33 are licensed as research reactors, the exceptions being the low-power critical experiment facility at Rensselaer Polytechnic and the 20 MW reactor at NIST. Consequently, the reference NPR for the present analysis is based on the reference research reactor described by Konzek et al. (1982), which in turn is based on the Oregon State University (OSU) 1,100 kW TRIGA reactor.

Summary data on the structural materials, including concrete, structural steel, and rebar used in the reference research reactor are presented by Konzek et al. (1982, Table B.2-1) and are listed in Table A.34.

Additional information characterizing a reference research reactor is provided by NRC (1994), which also uses the OSU reactor as a reference facility. NRC (1994, Table 7.1.1) estimates that 10% of the floor surface area and 2% of the wall surface area would be have some residual radioactivity.

A.4.2 Scaling Factors for Non-Power Reactors

As is the case with commercial nuclear power reactors, scaling factors are developed for non-power reactors to estimate the amount of material that would be generated during dismantlement. These scaling factors are based on data presented by Konzek et al. (1983) on the quantity of waste generated during the decommissioning of four non-power reactors, summarized in Table A.35.

The mass of waste listed in Table A.35 is plotted against the power level of each reactor in Figure A.5. A regression analysis was used to fit the following power function to these data:

$$M_{iw} = 0.0835\, P_i^{1.0813}$$

M_{iw} = mass of waste generated during decommissioning of non-power reactor *i* (t)

P_i = power level of reactor *i* (kW)

Table A.33 Licensed non-power reactors

Facility name	Location	Power (kw)	Type[a]	f_s[b]
Pool non-power reactors – with plate-type fuel				
Ohio State University	Columbus, OH	500	LW Mod	0.43
Purdue University	West Lafayette, IN	1	LW Mod Lockheed	5e-04
Rhode Island Nuclear Science Center	Narragansett, RI	2,000	LW Mod GE	1.91
University of Massachusetts	Lowell, MA	1,000	LW Mod GE	0.9
University of Michigan - Ford Reactor	Ann Arbor, MI	2,000	LW Mod	1.91
University of Missouri	Rolla, MO	200	LW Mod	0.16
Worcester Polytechnic Institute	Worcester, MA	10	LW Mod GE	0.006
Pool non-power reactors – with TRIGA fuel				
Aerotest Operations Inc.	San Ramon, CA	250	Conversion (Indus)	0.20
Armed Forces Radiobiological Research Institute	Bethesda, MD	1,100 + pulse	Mark F	1.0
Cornell University	Ithaca, NY	500 + pulse	Mark II	0.43
Dow Chemical Company	Midland, MI	300	Mark I	0.25
Kansas State University	Manhattan, KS	250 + pulse	Mark II	0.2
Oregon State University	Corvallis, OR	1,100 + pulse	Mark II	1.0
Pennsylvania State University	University Park, PA	1,000 + pulse	Conversion Mark II	0.9
Reed College	Portland, OR	250	Mark I	0.2
Texas A&M	College Station, TX	1,000 + pulse	Conversion	0.9
U.S. Geological Survey	Denver, CO	1,000 + pulse	Mark I	0.9
U.S. Veterans Administration	Omaha, NE	18	Mark I	0.012
University of Arizona	Tucson, AZ	100	Mark I	0.075
McClellan Nuclear Radiation Center University of California-Davis	Sacramento, CA	2,000 + pulse	Mark II	1.91
University of California	Irvine, CA	250	Mark I	0.2
University of Maryland	College Park, MD	250	Modified	0.2
University of Texas	Austin, TX	1,100 + pulse	Mark II	1.0
University of Utah	Salt Lake City, UT	100	Mark I	0.1
University of Wisconsin	Madison, WI	1,000 + pulse	Conversion	0.9
Washington State University	Pullman, WA	1,000 + pulse	Conversion	0.9
PULSTAR (uranium dioxide pellets, zircalloy clad) fueled				
North Carolina State University	Raleigh, NC	1,000	—	0.9
Critical experiment facility — with uranium dioxide, stainless steel clad fuel				
Rensselaer Polytechnic Institute	Schenectady, NY	0.1	LW Mod	4e-05
Tank non-power reactors — plate-type fuel				
General Electric Company	Sunol, CA	100	Graphite Mod	0.075
Massachusetts Institute of Technology	Boston, MA	4,900	LW Mod, HW Reflec	5.03
National Institute of Standards and Technology	Gaithersburg, MD	20,000	Heavy Water	23
University of Florida	Gainesville, FL	100	Argonaut	0.1
University of Missouri	Columbia, MO	10,000	LW Mod & Cooled	10.9
Tank non-power reactors — AGNs				
Idaho State University	Pocatello, ID	0	AGN-201 #103	0
Texas A&M University	College Station, TX	0.005	AGN-201 #106	2e-06
University of New Mexico	Albuquerque, NM	0	AGN-201M #112	0
Total				56.5

[a] LW Mod: light-water moderated; HW Mod: heavy-water moderated; HW Reflec: heavy-water reflected

[b] Scaling factor—see text

Table A.34 Estimated quantities of structural material in reference NPR

Structure	Concrete (m^3)	Rebar (t)	Structural steel (t)
Reactor Building	509	41.9	16.8
Reactor Structure	235	38.6	2.7
Radiation Center Annex	59	4.8	4.0
HX Addition	26	2.1	1.5
Pump House	8	0.6	0.2
Total	840	88.0	25.2

Source: Konzek et al. 1982, Table B.2-1

Table A.35 Waste generated during decommissioning of non-power reactors

Facility	Type	Power (kW)	Mass (t)
Ames Laboratory Research Reactor	Tank – MTR – D_2O	5,000	1,224
Diamond Ordnance Radiation Facility	Pool – TRIGA	250	27
Lynchburg Pool Reactor	Pool – MTR	200	14
North Carolina State University Reactor-3	Pool – MTR	10	1.5

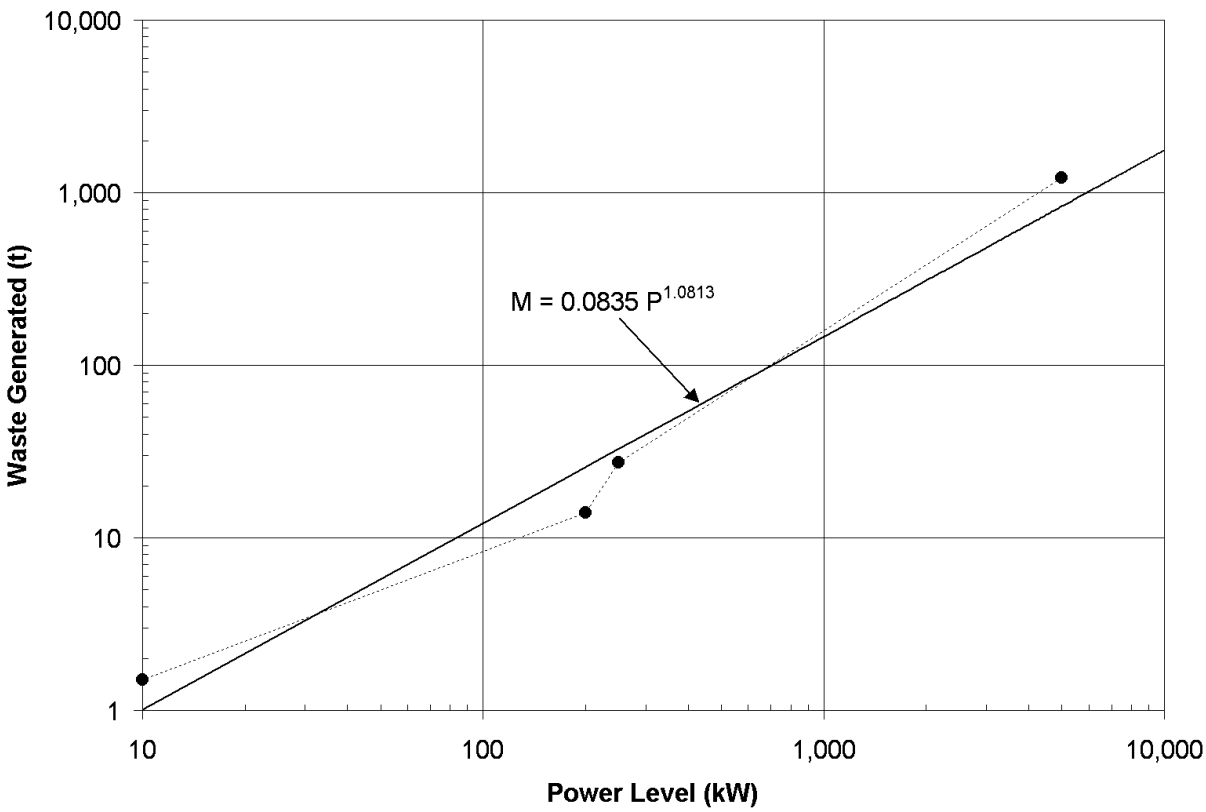

Figure A.5 Mass of decommissioning radwaste generated from non-power reactors

This power function, shown in Figure A.5 as a solid straight line, is an excellent fit to the data, with a correlation coefficient, $R^2 = 0.97$. This function forms the basis of a scaling factor that is

used to estimate the mass of material that would be generated during the dismantlement of an NPR with a given power rating:

$$M_i = M_r \left(\frac{P_i}{P_r} \right)^{1.0813}$$

M_i = mass of material generated during decommissioning of non-power reactor *i*

M_r = mass of material generated during decommissioning of reference NPR

P_r = power level of reference NPR
= 1,100 kW

The quantity $\left(\frac{P_i}{P_r} \right)^{1.0813}$ is the scaling factor for non-power reactor *i* . Scaling factors for each of the 36 operating NPRs are listed in Table A.33.

A.4.3 Inventory Summary—Non-Power Reactors

Mass of Steel

Table A.34 gives the mass of structural steel in the reference NPR as 25.2 t. As noted in Section A.4.1, 2% of the wall surfaces of the reference NPR would be have residual levels of radioactivity. This value is adopted as the fraction of structural steel that would be subject to clearance in the present analysis, resulting in 504 kg of steel that would be potentially cleared.

Mass of Concrete

The volume of concrete in the reference NPR is 840 m^3, as listed in Table A.34; the mass is estimated to be 1,925 t. As noted in Section A.4.1, 10% of the floor of the reference NPR would have residual levels of radioactivity. This value is adopted as the fraction of concrete that would be subject to clearance in the present analysis, resulting in 192.5 t of concrete that would be potentially cleared.

Mass of Copper and Aluminum

No data were found during the course of the present study on copper or aluminum in non-power reactors that would enable an estimate of the quantities of these metals that would be subject to clearance. The amounts of these metals in NPRs are judged to be small in comparison to the amounts of steel and concrete.

Scaling from Reference Facility

Section A.4.2 describes the approach developed for scaling the materials inventory of the reference NPR to other non-power reactors. This scaling approach is based on the quantities of

waste generated during the actual decommissioning of four non-power reactors, ranging in size from 10 to 5,000 kW.

A.5 Non-Fuel-Cycle Facilities

This section addresses the materials that may be candidates for clearance during routine operations and during decontamination and decommissioning in support of license termination of NRC and Agreement State non-fuel-cycle facilities.

NRC (2003b) lists a total of 21,422 materials licenses in the United States. Of these, 4,797 are NRC licenses while 16,625 are administered by Agreement States. NRC (2000c, Appendix G) assigns program codes to all NRC licenses. Program codes in the 2000 series are assigned to medical uses of radioactive materials. According to the NRC License Tracking System, the 2000 series comprises a total of 1,735 active licenses. Of these, 706 are held by medical institutions, while 916 are medical private practice licenses.[12] The medical field thus accounts for about 35% of the materials licenses.

Although fewer in number, the medical institutions, due to their larger size, are judged to account for the bulk of materials that would be potentially cleared from all medical licensees. The reference facility selected for the present analysis is based on information obtained during a visit by SC&A personnel to the Milton S. Hershey Medical Center in Harrisburg, PA.

The first step in the assessment was to estimate the total amount of material, equipment, furniture, etc., that is at play at a typical large research and university hospital, in this case the Hershey Medical Center (HMC). The term “at play” refers to material that is under regulatory control at any given time and that may be cleared per year. The quantity of material at play was determined by estimating the number of rooms under regulatory control at any given time, the number cleared per year, and the inventory of material in these rooms.

About 250 rooms are under regulatory control at Hershey Medical Center at any particular time, and 6 to 12 of these are cleared each year. The steel components that would be scrapped and potentially cleared from one room are:[13]

- 1 sink and drain, estimated weight = 50 lb (~23 kg)
- 20 m of sheet metal ductwork, estimated weight = 100 lb (~45 kg)

Assuming that an average of nine rooms are cleared each year, 1,350 lb (612 kg) of steel scrap would be generated. (There would be little or no concrete, copper, or aluminum.)

---

[12] Jean-Claude Dehmel, U.S. NRC Office of Regulatory Research, private communication with Robert Anigstein, SC&A, Inc., May 24, 2004.

[13] Ken Miller, Hershey Medical Center, private communication with John Mauro, SC&A, Inc., February 27, 2001.

Due to the large size of this facility, it would be inappropriate to simply multiply the annual amount of cleared material by the total number of medical licensees. However, an approximate measure of the size of an institution is the number of its employees. Hershey Medical Center has about 5,100 employees. According to the Bureau of the Census (2004), U.S. hospitals had 5,165,228 paid employees in 2002. In the absence of more specific information, we use a scaling factor of 1,000 to estimate the total amount steel scrap that would be potentially cleared from U.S. hospitals. Based on this information, approximately 600 t per year would be potentially cleared. Over the 50-year period during which other major nuclear facilities, notably nuclear power plants, would be dismantled, hospitals could clear 30 kt of steel scrap.

A.6 Estimates of Mass-to-Surface Area Ratios

As stated in Section 1.1 of the main report, the surficial normalized doses—doses normalized to areal activity concentrations—are calculated by dividing the mass-based doses by the mass-to-surface ratio of each of the four materials addressed in the present analysis.

A.6.1 Ferrous Metals

As stated in Section 3.8.1 of the main report, the mass-to-surface ratios of the various steel components of nuclear power reactors are analyzed in order to create a frequency distribution that is used in calculating surficial normalized doses. This analysis addresses three general types of components—rebar, structural steel, and pipe hangers—that are judged to be likely candidates for clearance. The total mass of rebar and structural steel in the reference BWR is listed in Table A.2; the mass of BWR pipe hangers is listed in Table A.3. Corresponding data for a reference PWR is provided by UE&C (1972). These data are listed in Table A.36.

Table A.36 Ferrous metal components used in mass-to-surface ratio analysis

Component or system	BWR		PWR	
	Mass (t)	Fraction	Mass (t)	Fraction
Rebar	18,351	80.69%	9,592	58.37%
Structural steel	3,307	14.54%	5,862	35.67%
Pipe hangers	1,085	4.77%	980	5.96%
Total	22,743	100.00%	16,434	100.00%

A.6.1.1 Reinforcing Steel (Rebar)

Reinforcing steel bar (rebar) is supplied in 11 standard sizes (R. S. Means 2000). Each size bar is given a designator based on its diameter. In English units, the designator is the diameter in units of ⅛ inch—for example, a #3 bar would be ⅜ or 0.375 inches in diameter, while a #8 bar would be 1 inch in diameter. For the larger diameter bars, this match between ⅛ in and its designator is not exact—e.g., #14 bar has a diameter of only 1.693 in, instead of 1.75 in. The metric designators are based on the approximate bar diameter in millimeters.

No data were found during the course of the present study that would enable us to quantify the amount of each size of rebar used in construction of a nuclear power plant. However, anecdotal evidence leads to the conclusion that nuclear plants utilize virtually the entire spectrum of rebar sizes.

- Both PWRs (Konzek et al. 1995a, Section 6.6.2) and BWRs (Smith et al. 1994b, Section H.6.1) utilize #18 rebar to reinforce their biological shield walls.

- Openings were cut in the containment walls of the R. E. Ginna, Byron, and Palisades plants during steam generator replacement. These cuts were through three layers of #18 rebar (Bluegrass n/d, Concut n/d).

- Decommissioning cost studies specify unit cost factors for the removal of concrete heavily reinforced with #9 and #18 rebar (TLG Services, Inc. 1999b).

- The Korean Peninsula Energy Development Organization issued a procurement package for Quality Class Q #14 and #18 reinforcing steel bars (KEDO 2000).

- Braverman (2001, Section 7.2.1) describes a "shear wall typical of those found in NPPs [nuclear power plants]" with "reinforcement consisting of #5 bars spaced at 8.5 in (21.6 cm) at each face in each direction." Braverman (2001,Table 8.1) presents crack acceptance limits for #4, #5, #6, #7, #8 and >#9 rebar.

- The D. C. Cook containment sub-compartment walls have #9 rebar on 12-inch centers (vertical) and #11 rebar on 6- or 12-inch centers (horizontal) (NRC 2000d).

- The reactor building for the K Production Reactor at the Savannah River Site contains #11 rebar in its base mat, and #8 and #11 rebar in its walls (WSRC 1991).

In the absence of more specific data, we assume that the rebar in a reference BWR or PWR is evenly distributed among the 11 common rebar sizes listed in Table A.37; thus, the total mass of rebar of any one size is equal to $\frac{1}{11}$ of the total mass of rebar in a given nuclear plant.

A.6.1.2 Structural Steel

Structural steel in an array of sizes is used throughout nuclear power plants. Steel I-beams are available in a wide variety of configurations, ranging from 4 × 13 [depth (in) by linear weight (lbs/ft)] to 24 × 104 and 30 × 99 for wide (W) beams, and 3 × 5.7 to 24 × 106 for standard (S) beams. Weights and dimensions for 137 I-beam sizes—110 W-beams and 27 S-beams—are listed on the on-line catalog of the South St. Paul Steel Supply Co., Inc. (2004). A schematic diagram of an I-beam is shown on the right. The flanges that form the top and bottom parts of the I-beam are connected by the web—the vertical part, as shown in the diagram.

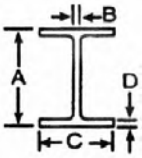

Table A.37 Reinforcing steel (rebar)

Designator		Diameter	Cross-section	Area per linear ft	Weight per linear ft	Mass-to-surface	
English	Metric	in	in^2	ft^2	lb/ft	lb/ft^2	g/cm^2
#3	10	0.375	0.11	0.098	0.376	3.83	1.87
#4	13	0.5	0.196	0.131	0.668	5.1	2.49
#5	16	0.625	0.307	0.164	1.043	6.38	3.12
#6	19	0.75	0.442	0.196	1.502	7.65	3.74
#7	22	0.875	0.601	0.229	2.045	8.93	4.36
#8	25	1	0.785	0.262	2.67	10.2	4.98
#9	29	1.128	0.999	0.295	3.398	11.51	5.62
#10	32	1.27	1.267	0.332	4.307	12.95	6.33
#11	36	1.41	1.561	0.369	5.309	14.38	7.03
#14	43	1.693	2.251	0.443	7.654	17.27	8.44
#18	57	2.257	4.001	0.591	13.603	23.02	11.25

Source: R. S. Means 2000

As in the case of rebar, we assume that the total mass of structural steel in the reference BWR and reference PWR is evenly distributed over these 137 I-beam sizes. Not all surfaces of the I-beam would have the same potential exposure to residually radioactive materials. In the simplified model used in the present analysis, the effective mass-to-surface ratio is based on the thickness of the top and bottom flange (dimension "D" in the above diagram) and the assumption that only the top and bottom surfaces (adjacent to the letters "B" and "C" in the diagram) would have been exposed. In effect, the I-beam is treated as a plate with thickness "D" and with only one surface exposed to residually radioactive materials. The thickness of the flange ranges from 0.205 to 1.25 inches (0.521 – 3.175 cm); the range of the resulting mass-to-surface ratios is 4.08 to 24.9 g/cm^2. The entire mass of the I-beam is included in the inventory of potentially cleared materials.

A.6.1.3 Pipe Hangers

Large numbers of hangers are used to support piping in a nuclear power plant. A typical pipe hanger consists of two main parts: a wall brace and a pipe clamp. Table A.38 presents data on the thickness of the material used in pipe clamps for hangers capable of handling a range of pipe sizes.

Detailed data on pipe hangers in the reference PWR are listed in Table A.39. Each size of PWR pipe hanger is assigned the same thickness and mass-to-surface ratio as the corresponding pipe clamp listed in Table A.38, assuming that the heaviest (i.e., thickest) clamps available for each pipe size are used in nuclear power plant service.[14] The mass-to-surface ratio is based on the

[14] The thickness of clamps for several of the smaller pipe sizes are specified in terms of gauges. Different sheet metal and wire gauges are employed by different U.S. industries. We made the simplifying assumption that the thickness in inches is the reciprocal of the gauge number.

assumption that any residual radioactive materials would be present on only one surface of the hanger. For the reference BWR, Bierschbach (1996) classifies pipe hangers only as being "small" or "large" (see Table A.3). Since this information is insufficient for estimating a distribution of mass-to-surface ratios, the BWR pipe hangers are assigned the same frequency distribution as those in the reference PWR.

Table A.38 Typical pipe clamp data

Nominal pipe size (in)	Standard		Heavy duty		Double bolt	
	Thickness[a]	Mass (lb)	Thickness[a]	Weight	Thickness[a]	Weight
½	11 ga	0.31	—	—	—	—
¾	11 ga	0.35	—	—	—	—
1	11 ga	0.39	—	—	—	—
1 ¼	11 ga	0.4	—	—	—	—
1 ½	11 ga	0.45	—	—	—	—
2	3 ga	1.23	—	—	—	—
2 ½	3 ga	1.33	—	—	—	—
3	3 ga	1.53	⅜	4.96	—	—
3 ½	3 ga	1.68	⅜	5.36	—	—
4	3 ga	1.86	⅜	5.74	—	—
5	3 ga	2.13	⅜	7.13	—	—
6	⅜	5.06	½	13.48	⅜	14.14
8	⅜	6.08	½	15.78	½	20.99
10	½	12.81	⅝	24.2	½	33.71
12	½	13.08	¾	41.54	⅝	48.17
14	½	16.7	¾	53.25	¾	70.5
16	½	23.19	¾	56.35	¾	93.9
18	⅝	33.12	¾	70.12	1	123.72
20	⅝	38.66	¾	74.68	1	156.43
24	⅝	52.27	¾	126.29	1	204.65
30	¾	105.13	—	—	—	—

Source: PHD Manufacturing, Inc. (n/d)

[a] thickness in inches unless otherwise stated

[b] sheet metal gauge

A.6.1.4 Miscellaneous Equipment

Miscellaneous equipment is not included in the frequency distribution of mass-to-surface ratios because the necessary data on such equipment were not found in the course of the present study.

Table A.39 PWR pipe hanger data

Nominal pipe size (in)	Number[a]	Mass[b]		Total mass (kg)	Thickness[c]		Ratio (g/cm^2)
		lb[a]	kg		in	cm	
1	4,920	82	37	183,000	0.09	0.23	1.81
2	2,962	123	56	165,258	0.33	0.84	6.64
3	1,554	164	74	115,603			
4	1,172	205	93	108,982			
6	452	288	131	59,048	0.50	1.27	9.96
8	1,002	370	168	168,168			
10	246	453	205	50,548	0.63	1.59	12.40
12	134	535	243	32,519	0.75	1.91	14.90
14	236	618	280	66,157			
18	19	783	355	6,748	1.00	2.54	19.90
20	3	865	392	1,177			
24	80	1,030	467	37,377			
28	32	1,195	542	17,346			

[a] Konzek et al. 1995a, Table C.5; Bierschbach 1995, Table A.1

[b] Each hanger

[c] From Table A.38 (see text)

A.6.1.5 Mass-to-Surface Ratios of Ferrous Metals

As discussed in the previous sections, the bulk of ferrous metals that would be cleared from a commercial nuclear power plant is assumed to comprise 11 sizes of rebar, 137 sizes of I-beams, and 6 thicknesses of pipe hangers, for a total of 153 discrete categories. Since the dismantlement of such a plant is assumed to span 1.7 years, an average of $\frac{1}{1.7} = 0.5882$ of the material would be cleared during any 1-year period of this 1.7-year time span. However, due to the nature of the dismantlement activities, it is not likely that all of the items in the 153 categories would be cleared at a uniform rate. The fraction of each category that would be cleared in 1 year is represented by a triangular probability distribution with a range of 0 – 1 and a mean (expectation) value of 0.5882. This distribution was applied separately to each of the 153 categories in a Monte Carlo simulation involving 10,000 realizations. An overall mass-to-surface ratio for cleared ferrous metals was calculated in each realization by taking the total mass of materials cleared in a given 1-year period divided by the total surface area of these materials:

$$\bar{\sigma} = \frac{\sum_{j=1}^{n} e_j m_j}{\sum_{j=1}^{n} e_j a_j}$$

$\bar{\sigma}$ = average mass-to-surface ratio of carbon steel components likely to be cleared from a BWR or PWR in a given 1-year period (g/cm^2)

e_j = fraction of components in category *j* cleared in given 1-year period

m_j = total mass of components in category *j* (g)

a_j = total exposed surface area of components in category *j* (cm^2)

These 10,000 individual values for each type of reactor—PWR and BWR—were utilized in the probabilistic analyses of individual exposure scenarios to convert the mass-based normalized doses to surficial normalized doses, as discussed in Section 3.8.1 of the main report. The mean of the 10,000 values of $\overline{\sigma}$ is 5.34 ± 0.27 g/cm^2 for a PWR and 4.53 ± 0.26 g/cm^2 for a BWR. The range of values is represented by the standard deviation of the individual values, not the standard error of the mean. These data are presented as a matter of interest; however, only the individual values were utilized in the radiological assessments.

A.6.2 Concrete

A.6.2.1 Concrete in Reference PWR

The volume of concrete used in constructing a 1,000 MWe PWR is summarized by UE&C (1972), who also provide data on the area of the forms required to pour the various concrete structures. Data used to calculate the mass-to-surface ratios for the various components, based on this information, are presented in Table 6.1 of the main report. The 18 components in that table are assumed to be potentially cleared after surface scabbling of hot spots. These components constitute over 95% of the 142,500 t of concrete that would be potentially cleared from a reference PWR (see Table A.15). As in the case of ferrous metals, we assume that the clearance would take place over the 1.7-year period of dismantlement, and that a random fraction of each component, represented by a triangular distribution with the same parameters, would be cleared during any 1-year period of this 1.7-year time span. A new value of $\overline{\sigma}$ was calculated for each realization in the probabilistic analyses of the concrete exposure scenarios.

A.6.2.2 Concrete in BWR

As noted in Table A.8, the mass of potentially cleared concrete in a reference BWR is about 281,000 t. This is assumed to comprise the Reactor Building, Primary Containment, Turbine Generator Building, and Radwaste and Control Building, adjusted for removal of activated and surficially radioactive material. Since data comparable to that for the PWRs were not available to calculate the mass-to-surface area ratio for the reference BWR, values of $\overline{\sigma}$ are calculated in the same way as in the probabilistic analysis of concrete cleared from the PWR.

A.6.3 Copper

As listed in Table A.10, a reference PWR contains 694 t of copper. Of this total, 482 t (or about 70 percent) is categorized as power and control wiring associated with electrical plant equipment. However, no details are available concerning the sizes and quantities of copper wire used. UC&E (1972) characterize a total of 29 t of bus bar. We assume that the balance of the copper—665 t—is 600 volt PVC-insulated copper conductor.

Wire that is surveyed prior to clearance would be stripped of its insulation and chopped into short lengths. Wire that is heavier than 10 gauge is typically stranded. The very large diameter cables would most likely be separated into individual strands. The heaviest cable listed by the Nehring Electrical Works Co. (n/d), 1000 gauge, is composed of 61 strands.[15] The individual strands are estimated to be between 6 and 8 gauge, based on the wire dimensions listed by Nehring. For the purpose of the present analysis, it is assumed that the wire in the PWR is uniformly distributed over even-numbered gauges ranging from 8 to 14. Given the absence of similar data for BWRs, the same distribution is utilized in the assessment of copper scrap cleared from both types of light-water reactors. Further information on the probability distribution of mass-to-surface ratios of cleared copper scrap is presented in Section 4.2.1 of the main report.

A.6.4 Aluminum

As described in Table A.10, a reference PWR contains about 18 t of aluminum, including 6.1 t in furnishings and fixtures, 400 kg in communication equipment, 4.1 t in switchboards, 6.4 t in instrumentation and controls, and 1.2 t in structures (mostly in the turbine building). Furnishings and fixtures encompass items such as office furniture, office equipment, lockers, benches, laboratory furniture and fixtures, and laundry and dining facilities (UE&C 1972). From this limited description, we conclude that the aluminum is likely to be sheet metal or thin-walled tubing, ranging in thickness from 0.0625 to 0.25 in (0.16 to 0.64 cm). In the absence of any other data, the same conclusion is applied to a BWR. Further information on the probability distribution of mass-to-surface ratios of cleared aluminum scrap is presented in Section 5.2.1 of the main report.

A.7 Total Mass of Potentially Cleared Materials from Licensed Facilities

This section presents a summary of the masses of potentially cleared ferrous metals, concrete, aluminum, and copper resulting from the decommissioning of NRC-licensed facilities. The cumulative masses were adjusted for facility size using the scaling factor concept described in Section A.2.2 and elsewhere. Summary information is presented in Table A.40. In this table, the cumulative mass is the product of the reference facility mass of potentially cleared materials and the scaling factor. It is apparent that nuclear power reactors will contribute 98% of the ferrous metals, 99% of the concrete, and all of the aluminum and copper. These estimates are based on the available data included in this study. As indicated in the table, not all materials were identified at all facilities. Consequently, the actual fractions of the masses of potentially cleared materials from nuclear power reactors may be slightly less than stated here.

The estimated total masses of potentially cleared materials from decommissioning of all licensed facilities are listed below.

[15] Nonferrous wire is designated by AWG (American Wire Gauge) or the equivalent Brown & Sharpe (B & S) gauges. These gauges are numbered 0000 – 40, corresponding to nominal wire diameters of 0.460 – 0.0044 inch (1.168 – 0.0112 cm). Nehring designates wire (or cable) that is heavier than 0000 AWG by gauge numbers 250 – 1000. The gauges in this range designate progressively heavier wire, unlike AWG sizes, of which the thinnest wire is 40 gauge.

- Ferrous metals . . . . . 2.4 Mt
- Concrete . . . . . 20 Mt
- Copper . . . . . 6,585 t
- Aluminum . . . . . 212 t

These are estimates of potentially cleared materials generated during dismantlement of licensed facilities. They do not include any materials generated during normal facility operation. The estimates are based on the maximum estimated mass of potentially cleared materials from each type of facility and do not consider variability in the data. Implicit in the development of the mass of potentially cleared materials is the assumption that the activity levels in radioactive materials are sufficiently high that there are very limited economic or risk-based incentives to decontaminate materials for clearance. Consequently, variability in the mass of potentially cleared material is expected to be primarily at the expense of clean material only. Industry decommissioning practices reviewed in the course of preparing this appendix are generally consistent with this practice, although some deviations are possible.

Table A.40 Mass of potentially cleared materials from decommissioning of licensed facilities

Description	No. of facilities	Scaling factor	Mass per facility (t)				Total mass (t)				Fraction of total mass			
			Ferrous	Concrete	Aluminum	Copper	Ferrous	Concrete	Aluminum	Copper	Ferrous	Concrete	Aluminum	Copper
Nuclear power reactors														
BWR	35	32.327	19,374	281,000	2	62	6.26e+05	9.08e+06	64.7	2,004	0.264	0.454	0.304	0.304
PWR	69	65.866	23,255	142,503	2	62	1.53e+06	9.39e+06	132	4,084	0.645	0.469	0.620	0.620
Shutdown PWR[b]	8	6.088	23,255	142,503	2	62	1.42e+05	8.68e+05	12.2	377	0.060	0.043	0.057	0.057
Shutdown BWR	9	1.922	19,374	281,000	2	62	3.72e+04	5.40e+05	3.84	119	0.016	0.027	0.018	0.018
Total	121						2.34e+06	1.99e+07	212	6,585	0.984	0.994	1.000	1
Non-power reactors														
Operating	36	56.71	0.504	192.5	a	a	29	10,917	a	a	1e-05	5e-04	a	a
Fuel cycle facilities														
Fuel fabs	7	4.62	1,087	7,128	a	a	5,022	32,931	a	a	0.002	0.002	a	a
U conversion	2	1.9	513	2,050	a	a	975	3,895	a	a	4e-04	2e-04	a	a
ISFSI[c]														
Modular vault	1	1	0	11,800	0	0	0	11,800	0	0	0	6e-04	0	0
Wet	1	1	0	1,940	0	0	0	1,940	0	0	0	1e-04	0	0
Concrete	7	148	0	122.58	0	0	0	18,142	0	0	0	9e-04	0	0
NUHOMS-PWR	7	270	3	102.9	0	0	810	27,783	0	0	3e-04	0.001	0	0
NUHOMS-BWR	1	36	3.1	106.6	0	0	112	3,838	0	0	5e-05	2e-04	0	0
Metal cask	7	226	0	50.209	0	0	0	11,347	0	0	0	6e-04	0	0
Materials licensees														
Hospitals	—	1,000	30.6	a	a	a	30,600	a	a	a	0.013	a	a	a
Total							2.37e+06	2.00e+07	212	6,585	1	1	1	1

[a] No data available

[b] Does not include Yankee and Trojan

[c] Sum of ISFSI facilities is greater than number of facilities analyzed because some facilities have more than one type of cask.

References

Anigstein, R., et al. 2001. "Technical Support Document – Potential Recycling of Scrap Metal from Nuclear Facilities, Part I: Radiological Assessment of Exposed Individuals." Washington, DC.: U.S. Environmental Protection Agency, Office of Radiation and Indoor Air http://www.epa.gov/radiation/cleanmetals/docs/tsd (August 12, 2002).

Bierschbach, M. C. 1995. "Estimating Pressurized Water Reactor Decommissioning Costs: A User's Manual for the PWR Cost Estimating Computer Program (CECP) Software," NUREG/CR-6054. Washington, DC: U.S. Nuclear Regulatory Commission.

Bierschbach, M. C. 1996. "Estimating Boiling Water Reactor Decommissioning Costs," NUREG/CR-6270. Washington, DC: U.S. Nuclear Regulatory Commission.

Bluegrass Bit Company. (n/d). "Bluegrass Nuclear Performance and Experience.". http://www.bluegrassbit.com/clients/nuc-jobs/nuc_h.html (May 4, 2004).

BNFL Fuel Solutions Corporation (BNFL). 2000a. "Revision 1 of License Amendment Request 00-02, DFI Amendment," BFS/NRC-00-079, Docket No. 72-1007. Scotts Valley, CA: Author.

BNFL Fuel Solutions Corporation (BNFL). 2000b. "Fuel Solutions™ Storage System Safety Analysis Report." Revision 4, WNSF-200, Docket No. 72-1026. Scotts Valley, CA: Author.

BNFL Fuel Solutions Corporation (BNFL). 2000c. "Fuel Solutions™ W21 Canister Storage Safety Analysis Report." Revision 4, WNSF-201, Docket No. 72-1026. Scotts Valley, CA: Author.

BNFL Fuel Solutions Corporation (BNFL). 2000d. "Fuel Solutions™ W74 Canister Storage Safety Analysis Report." Revision 4, WNSF-203, Docket No. 72-1026. Scotts Valley, CA: Author.

Braverman, J. I., et al. 2001. "Probability-Based Evaluation of Degraded Reinforced Concrete Components in Nuclear Power Plants," NUREG/CR-6715. Washington, DC: U.S. Nuclear Regulatory Commission.

Bryan, R. H., and I. T. Dudley. 1974. "Estimated Quantities of Materials Contained in a 1000-MW(e) PWR Power Plant," ORNL-TM-4515. Oak Ridge, TN: Oak Ridge National Laboratory.

Bureau of the Census (U.S.) 2004. "2002 Economic Census: Table 1. Advance Summary Statistics for the United States, 2002 NAICS Basis." http://www.census.gov/econ/census02/advance/TABLE1.HTM (May 31, 2004).

Code of Federal Regulations, *Title 10, Energy*, Part 20, "Standards for Protection Against Radiation," (10 CFR 20). http://www.nrc.gov/reading-rm/doc-collections/cfr/part020/full-text.html (May 2, 2003).

Code of Federal Regulations, *Title 10, Energy*, Part 40, "Domestic Licensing of Source Material" (10 CFR 40). http://www.nrc.gov/reading-rm/doc-collections/cfr/part040/full-text.html (April 29, 2004).

Code of Federal Regulations, Title 10, Energy, Part 170, "Fees for Facilities, Materials, Import and Export Licenses, and Other Regulatory Services under the Atomic Energy Act of 1954, as Amended," 170.3, "Definitions," (10 CFR 170.3). http://www.nrc.gov/reading-rm/doc-collections/cfr/part170/part170-0003.html (May 4, 2004).

Concrete Cutting and Breaking, Inc. (Concut). (n/d). "Nuclear Plant Renovation." http://www.concut.com/ps_nuclearplant.htm (May 4, 2004).

Department of Energy (U.S.), Energy Information Administration (DOE). 1995. "Decommissioning of U.S. Uranium Production Facilities." DOE-EIA-0592. Washington, DC: Author.

Elder, H. K., and D. E. Blahnik. 1980. "Technology, Safety and Costs of Decommissioning a Reference Uranium Fuel Fabrication Plant," NUREG/CR-1266. Vols. 1 and 2. Washington, DC: U.S. Nuclear Regulatory Commission.

Elder, H. K., and D. E. Blahnik. 1981. "Technology, Safety and Costs of Decommissioning a Reference Uranium Hexafluoride Conversion Plant," NUREG/CR-1757. Washington, DC: U.S. Nuclear Regulatory Commission.

GE Nuclear Energy. 2000. "Consolidated Safety Analysis Report for Morris Operations, Morris, Illinois" NEDO-21326D9. Author.

Gesellschaft für Nuklear-Behälter, mbH (GNB). 2000. "Topical Safety Analysis Report for the Dry Storage Cask CASTOR® X/32 S." GNB B 124/99, Revision 1, Docket No. 72-1028. Essen, Germany: Author.

Keegan, E. (NRC Spent Fuel Program Office). 2003. <ENK@nrc.gov> "ISFSI information" August 21, 2003, personal e-mail to Jean-Claude Dehmel, NRC Office of Regulatory Research.

Konzek, G. J., et al. 1982. "Technology, Safety and Costs of Decommissioning Reference Nuclear Research and Test Reactors," NUREG/CR-1756. Vols. 1 and 2. Washington, DC: U.S. Nuclear Regulatory Commission.

Konzek, G. J., et al. 1983. "Technology, Safety and Costs of Decommissioning Reference Nuclear Research and Test Reactors," NUREG/CR-1756. Addendum. Washington, DC: U.S. Nuclear Regulatory Commission.

Konzek, G. J., et al. 1995a. "Revised Analysis of the Decommissioning for the Reference Pressurized Water Reactor Power Reactor Station," NUREG/CR-5884. Vol. 1, Main Report. Washington, DC: U.S. Nuclear Regulatory Commission.

Konzek, G. J., et al. 1995b. "Revised Analysis of the Decommissioning for the Reference Pressurized Water Reactor Power Reactor Station," NUREG/CR-5884. Vol. 2, "Appendices." Washington, DC: U.S. Nuclear Regulatory Commission.

The Korean Peninsula Energy Development Organization (KEDO). 2000. "Opportunity to Participate in Reinforcing Steel Bar Procurement Package No. 9-104-C206." http://www.kedo.org/Procurement/ProcPackage9-104-C206.htm (May 20, 2002).

Lorenz, S., and F. Gardner, 1997. "Recycling of Metals in Practice - Commercial Experience." In R. G. Post (Ed.), *Waste Management '97*. Tucson, AZ: University of Arizona.

Ludwick, J. D., and E. B. Moore. 1984. "Technology, Safety and Costs of Decommissioning Reference Independent Spent Fuel Storage Installations," NUREG/CR-2210. Washington, DC: U.S. Nuclear Regulatory Commission.

Nehring Electrical Works Co. (n/d). "600 Volt Thermoplastic Insulated Cable." http://www.nehringelectrical.com/html/p8.htm (May 5, 2003).

Nuclear Regulatory Commission (U.S.) (NRC). 1988. "General Requirements for Decommissioning Nuclear Facilities." Federal Register: Vol. 53, No. 123. June 27, 1988.

Nuclear Regulatory Commission (U.S.) (NRC). 1993. "Manual for Conducting Radiological Surveys in Support of License Termination," NUREG/CR-5849. Washington, DC: Author.

Nuclear Regulatory Commission (U.S.) (NRC). 1994. "Generic Environmental Impact Statement in Support of Rulemaking on Radiological Criteria for Decommissioning of NRC-Licensed Nuclear Facilities," NUREG-1496, Vol. 2, Draft Report for Comment. Washington, DC: Author.

Nuclear Regulatory Commission (U.S.) (NRC). 2000a. "Information Digest, 2000 Edition," NUREG-1350, Vol. 12. Washington, DC: Author.

Nuclear Regulatory Commission (U.S.) (NRC). 2000b. "Decommissioning of Nuclear Power Reactors," Regulatory Guide 1.184. Washington, DC: Author.

Nuclear Regulatory Commission (U.S.) (NRC). 2000c. "Consolidated Guidance about Materials Licenses: Guidance about Administrative Licensing Procedures," Final NUREG-1556, Vol. 20. Washington, DC: Author.

Nuclear Regulatory Commission (U.S.) (NRC). 2000d. "Donald C. Cook– Summary of June 1, 2000, Public Meeting Regarding Containment Subcompartment Wall." Washington, DC. Letter to Robert P. Powers, Indiana Michigan Power Company, dated June 12, 2000.

Nuclear Regulatory Commission (U.S.) (NRC). 2000e. "Multi-Agency Radiation Survey and Site Investigation Manual (MARSSIM)," NUREG-1575, Rev. 1. Washington, DC: Author.

Nuclear Regulatory Commission (U.S.) (NRC). 2002. "Information Digest, 2002 Edition," NUREG-1350, Vol. 14. Washington, DC: Author.

Nuclear Regulatory Commission (U.S.) (NRC). 2003a. "Fact Sheet on Uranium Mill Tailings." Washington, DC: Author. http://www.nrc.gov/reading-rm/doc-collections/fact-sheets/mill-tailings.html (May 4, 2004).

Nuclear Regulatory Commission (U.S.) (NRC). 2003b. "Information Digest, 2003 Edition," NUREG-1350, Vol. 15. Washington, DC: Author.

Oak, H. D. et al. 1980a. "Technology, Safety and Costs of Decommissioning a Reference Boiling Water Reactor Power Station," NUREG/CR-0672, Vol. 1, "Main Report." Washington, DC: U.S. Nuclear Regulatory Commission.

Oak, H. D. et al. 1980b. "Technology, Safety and Costs of Decommissioning a Reference Boiling Water Reactor Power Station," NUREG/CR-0672, Vol. 2, "Appendices." Washington, DC: U.S. Nuclear Regulatory Commission.

PHD Manufacturing, Inc. (n/d). "Online Catalog: Pipe Clamps." http://www.phd-mfg.com/ (May 4, 2004).

Portland General Electric Corp. 1995. "Trojan Nuclear Plant: Radiological Site Characterization Report," Revision 0.1. Author.

Portland General Electric Corp. 2001. "Trojan Decommissioning Plan and License Termination Plan," Revision 9. Author.

R. S. Means Company Staff. 2000. *Building Construction Cost Data, 2000*. 58th ed. Kingston, MA: R. S. Means Company, Incorporated.

Raddatz, M. G., and M. D. Waters. 1996. "Information Handbook on Independent Spent Fuel Storage Installations," NUREG-1571. Washington, DC: U.S. Nuclear Regulatory Commission.

Smith, R.I. et al. 1978a. "Technology, Safety, and Costs of Decommissioning a Reference Pressurized Water Reactor Power Reactor Station," NUREG/CR-0130, Vol. 1, "Main Report." Washington, DC: U.S. Nuclear Regulatory Commission.

Smith, R. I. et al. 1978b. "Technology, Safety, and Costs of Decommissioning a Reference Pressurized Water Reactor Power Reactor Station," NUREG/CR-0130, Vol. 2, "Appendices." Washington, DC: U.S. Nuclear Regulatory Commission.

Smith, R. I. et al. 1994a. "Revised Analyses of Decommissioning for the Reference Boiling Water Reactor Power Station," NUREG/CR-6174, Vol. 1, "Main Report." Washington, DC: U.S. Nuclear Regulatory Commission.

Smith, R. I. et al. 1994b. "Revised Analyses of Decommissioning for the Reference Boiling Water Reactor Power Station," NUREG/CR-6174, Vol. 2, "Appendices." Washington, DC: U.S. Nuclear Regulatory Commission.

South St. Paul Steel Supply Co., Inc. 2004. "Hot Rolled Steel Products." South St. Paul, MN. http://www.sspss.com (May 6, 2004).

TLG Services, Inc. 1999a. "Decommissioning Cost Study for the Millstone Nuclear Power Station Unit 1." Bridgewater, CT: Author.

TLG Services, Inc. 1999b. "Decommissioning Cost Estimate for the Zion Nuclear Power Station Units 1 and 2," Adams System Document No. C04-1326-002. Bridgewater, CT: Author.

Transnuclear West, Inc. (TNW). 2000. "Final Safety Analysis Report for the Standard NUHOMS® Horizontal Modular Storage System for Irradiated Nuclear Fuel." NUH-003, Revision 5, NUH003.0103. Fremont, CA: Author.

United Engineers and Constructors, Inc. (UE&C). 1972. "Volume I: Pressurized Water Reactor Plant, 1000-MWe Central Station Power Plants, Investment Cost Study," WASH-1230 (Vol I). Washington DC: U.S. Atomic Energy Commission, Division of Reactor Development and Technology.

Virginia Electric & Power Company (VEPCO). 2000. "North Anna Independent Spent Fuel Storage Installation, Final Safety Analysis Report." Revision 2. Richmond, VA: Author.

Westinghouse Savannah River Company (WSRC). 1991. "Savannah River Site Production Reactor Safety Analysis Report, K Production Reactor." WSRC-SA-1000-3, Amendment 1. Aiken, SC: Author.

APPENDIX B

PARAMETER VALUES

CONTENTS

Page

Appendix B Parameter Values B-1
B.1 Probability Distributions B-1

B.2 Types of Distributions B-1
B.2.1 Uniform B-1
B.2.2 Triangular B-1
B.2.3 Beta B-2
B.2.4 Normal B-2
B.2.5 Lognormal B-2
B.2.6 Custom B-2

B.3 Fixed Values B-3

B.4 Data Quality B-3

References B-37

Tables

B.1 Data quality levels B-3
B.2 Partitioning of impurities in iron- and steelmaking B-4
B.3 Mass fractions in iron- and steelmaking B-6
B.4 Partitioning of impurities in copper fire refining B-7
B.5 Mass fractions in fire refining of copper scrap B-8
B.6 Partitioning of impurities in secondary aluminum smelting B-9
B.7 Mass fractions in secondary smelting of aluminum scrap B-10
B.8 Radionuclide-independent parameters of exposure scenarios B-11
B.9 Radionuclide-independent parameters specific to copper scenarios B-21
B.10 Radionuclide-independent parameters specific to aluminum scenarios B-22
B.11 Radionuclide-independent parameter definitions specific to concrete scenarios B-23
B.12 Time spent on various activities: cumulative distributions B-23
B.13 Hydrogeological parameters: custom distributions B-24
B.14 Distance from landfill boundary to nearest well: continuous cumulative distribution . B-24
B.15 Radioactive decay data B-25
B.16 Dose conversion factors for inhalation—effective dose equivalent (:Sv/Bq) B-26
B.17 Dose coefficients for inhalation—effective dose (:Sv/Bq) B-28
B.18 Dose conversion factors for ingestion—effective dose equivalent (:Sv/Bq) B-30
B.19 Dose coefficients for ingestion—effective dose (:Sv/Bq) B-32
B.20 Dose coefficients for external exposure to contaminated soil B-34
B.21 Soil-water distribution coefficients and food transfer factors B-35

B PARAMETER VALUES

This appendix presents detailed numerical data used in the analyses of the clearance of all materials. The tables in this appendix list data that supplement the information in Volume 1 of this report.

As discussed in Section 1.3 of the main report, each of the exposure scenarios described in Chapters 3 – 6 is characterized by a set of parameters that constitute a mathematical description of that scenario. Each scenario models the exposure of a group of individuals to the residual activity of a given medium. The concentration of a given radionuclide in such a medium is the result of one or more processes: the mixing of cleared material (e.g., scrap metal) with similar material from sources other than nuclear facilities, the melt-refining of scrap metal by a secondary metal producer, the commingling of material disposed of in a landfill with wastes from other sources, etc. Each of these processes is characterized by additional parameters.

B.1 Probability Distributions

In the present analysis, a parameter that does not have a single fixed value is characterized by a probability distribution. The type of distribution and the numerical parameters that define the distribution is determined by the supporting data as well as professional judgement. The approach used to characterize parameter distributions follows the practices recommended by the IAEA (1989).

B.2 Types of Distributions

The types of probability distributions used in the present analysis are described in the following sections, which present some general guidelines which are followed in assigning distributions to the various parameters. It should be noted that the nature of the data underlying many of the parameters varies greatly; assigning probability distributions to such parameters requires professional judgement that cannot be summarized as a set of simple rules. The actual distribution used for each parameter is specified in Tables B.2 – B.11.

B.2.1 Uniform

Uniform distributions—the simplest type of distribution—are assigned to parameters for which there is information on the range of values but no data on which to base a best estimate.

B.2.2 Triangular

Triangular distributions are assigned when there is information on the minimum and maximum and a basis for estimating the best estimate or the mean, but no other information on the likely shape of the distribution.

B.2.3 Beta

In the present analysis, beta distributions are often used to model the partitioning of impurities during the melting and refining of scrap metal. Such distributions are used when there is information on which to base the best estimate and when there is a range which is either naturally imposed (e.g., the partition factor cannot be less than zero or greater than one), or is based on professional judgement. A natural variability, such as the variability of the physico-chemical environment in the melting furnace, is not well represented by a triangular distribution, with it's the sharp peak and discontinuous first derivative, while a uniform distribution would embody the false assumption that all values in the interval were equally likely. The beta distribution, defined only on the desired interval, is constructed with a mean equal to the best estimate and a standard deviation equal to one-fourth of the interval. Such a distribution can be thought of as a compromise between a uniform distribution (too broad) and a triangular distribution (too sharply peaked). In fact, the variance of such a beta distribution is equal to the average of the variances of a uniform distribution and a symmetrical triangular distribution over the same interval.

The methodology used to assign a range of values to each of the partition factors is described in Section J.5 of Volume 4.

B.2.4 Normal

Normal distributions are used to represent parameters which are described by normal distributions in the literature. These distributions are also used when the mean value and the standard deviation or coefficient of variation is reported for a parameter. Limits are imposed on these distributions if minimum and/or maximum values are reported, or if constrained by the definition of a given scenario.

B.2.5 Lognormal

Lognormal distributions are used to represent parameters which are described by lognormal distributions in the literature. These distributions are also used when the available data are best described by such a distribution. Limits are imposed on these distributions if minimum and/or maximum values are reported, or if constrained by the definition of a given scenario.

B.2.6 Custom

Custom distributions are used to represent certain parameters. Custom distributions may be either discrete or continuous. If the parameter can only assume one of several discrete values, each with an assigned probability, it is assigned a *discrete distribution*. Examples of such distributions are shown in Table B.13. If the parameter can take on a continuous range of values and the source data is in the form of percentiles, a *continuous cumulative distribution* can be constructed by linear interpolation between adjacent data points. Examples of such distributions are shown in Tables B.12 – B.14. Custom distributions can also be constructed by algebraic manipulation of beta functions. Examples of such distributions are presented in Footnote c on

page B-19 and in Sections C.2.6 and C.4.4. Other unique distributions are described in other chapters and appendices of the present report.

B.3 Fixed Values

Fixed values are assigned to several types of parameters. Physical quantities, such as radioactive decay rates, are assigned their accepted values; experimental uncertainties are not addressed in the present assessment. Dose factors listed by Eckerman et al. (1988), Eckerman and Ryman (1993), ICRP (1987, 1994, 1996) have been adopted for regulatory purposes and are therefore treated as fixed parameters.

Other parameters within a scenario are considered constant if they are fundamental to the definition of the scenario. Examples include the time period over which potential exposures occur (one year) and the thickness of the surface soil layer. The uncertainty and variability in some parameter values has been combined into specific uncertainty factors. The uncertainty factors typically represent an attempt to capture the most significant or the best known sources of uncertainty and variability in an exposure pathway or environmental transport pathway. An example is the food pathway, where individual parameter values such as growing periods for plants, hold-up periods, and translocation fractions were held constant, and an input distribution was developed for the parameter for the fraction of the diet derived from home-grown sources.

Finally, some parameters are assigned fixed values either because they are known with a high degree of certainty, or because only a single value is cited in the literature, with no basis for a range.

B.4 Data Quality

The quality of the data employed in the analysis varies widely. The quality of the parameters is rated on a scale of one to six, one being the highest. As with the assignment of probability distributions to the parameters, the evaluation of the data quality follows some general guidelines, but also relies to a great extent on professional judgement. The general guidelines for assigning data quality are listed in Table B.1 The actual data quality assigned to each parameter is listed in Tables B.2 – B.11.

Table B.1 Data quality levels

Level	Criteria
1	Physical quantities with fixed values (see text); parameters that define scenario or model; published data based on large number of samples applicable to scenario
2	Data on related experience or populations which closely match scenario descriptions
3	Data on related experience or populations which approximate scenario descriptions
4	Values based on a few data points, limited industry experience, or theoretical models
5	Values based on sparse data or expert opinion
6	Anecdotal data based on one observation

Table B.2 Partitioning of impurities in iron- and steelmaking

Symbol	Parameter description/scenario	Metal[a]	Data quality	Distribution	Alpha, fixed value, or formula[b]	Beta[c]	Min.	Max.
f_a	Atmospheric release fractions of volatile elements							
	H	+	—	derived	1 ! f_p		0.85	0.95
	C	CS	4	beta	2.1763	3.7857	0	0.73
		Fe	4	fixed	0			
	Na, P, S, K, Ca, Sc, Cr, Mn, Fe, Co, Ni, Zn, As, Se, Sr, Y, Zr, Nb, Mo, Tc, Ru, Ag, Cd, Sn, Sb, Te, Cs, Ba, Ce, Pm, Sm, Eu, Gd, Tb, Tm, Ta, W, Os, Ir, Tl, Pb, Bi, Po, Ra, Ac, Th, Pa, U, Np, Pu, Am, Cm, Bk, Cf, Es	+	4	fixed	0			
	Cl, I	+	—	derived	1 ! f_d ! f_g		0	1.0
f_d	Dust partitioning factors							
	H	+	4	fixed	0			
	C	CS	4	fixed	0			
	C, Cr, Mn Fe, Co, Ni, Mo, Tc, Ru, Ag, W, Ir	Fe	4	uniform			0	0.01
	Na, K	CS	4	beta	49.52	49.52	0.40	0.60
		Fe	—	derived	1 ! f_g		0.5	1.0
	P	+	5	uniform			0.02	0.04
	S	+	4	beta	8.7574	282.24	0.01	0.05
	Cl, I	+	4	beta	2.7522	8.2543	0	0.50
	Ca, Sc, Sr, Y, Zr, Nb, Ba, Ce, Pm, Sm, Eu, Gd, Tb, Tm, Ta, Ra, Ac, Th, Pa, U, Np, Pu, Am, Cm, Bk, Cf, Es	+	4	beta	15.209	288.43	0.025	0.075
	Cr	CS	4	uniform			0.01	0.03
	Mn	CS	4	uniform			0.03	0.04
	Fe, Co, Ni, Mo, Tc, Ru, W, Ir	CS	4	uniform			0.005	0.015
	Zn	CS	—	derived	1 ! f_p		0.80	1.00
		Fe	—	derived	1 ! f_p		0.97	0.99
	As	+	4	beta	6.0038	14.006	0.1	0.5
	Ag	CS	4	beta	3.96	26.484	0.01	0.25
	Cd	+	4	fixed	1.0			
	Se, Te, Pb, Tl, Bi, Po	CS	—	derived	1 ! f_p		0.925	0.975
	Se	Fe	4	beta	14.851	197.05	0.035	0.105
	Sn	+	4	uniform			0.005	0.015
	Sb	CS	4	beta	4.2762	36.419	0.01	0.20
		Fe	4	beta	368.61	15.395	0.94	0.98
	Te	Fe	4	beta	49.52	49.52	0.4	0.6
	Cs	CS	—	derived	1 ! f_g		0.95	1.00
		Fe	—	derived	1 ! f_g		0.5	1.0
	Os	+	—	derived	1 ! f_p		0.925	0.975
	Tl, Pb	Fe	—	derived	1 ! f_p		0.90	0.96
	Bi	Fe	—	derived	1 ! f_p		0.93	0.97
	Po	Fe	4	fixed	1.0			

Table B.2 Partitioning of impurities in iron- and steelmaking

Symbol	Parameter description/scenario	Metal[a]	Data quality	Distribution	Alpha, fixed value, or formula[b]	Beta[c]	Min.	Max.
f_g	Slag partitioning factors							
	H, C, Co, Ni, Zn, As, Se, Mo, Tc, Ru, Ag, Cd, Sn, Te, W, Os, Ir, Tl, Pb, Bi, Po	+	4	fixed	0			
	Na, K	CS	—	derived	1 ! f_d		0.4	0.6
	Na, K, Cs	Fe	4	beta	2.7522	8.2543	0.0	0.5
	P	+	4	beta	16.597	7.6334	0.50	0.87
	S	+	4	beta	86.619	19.67	0.74	0.89
	Ca, Sc, Sr, Y, Zr, Nb, Ba, Ce, Pm, Sm, Eu, Gd, Tb, Tm, Ta, Ra, Ac, Th, Pa, U, Np, Pu, Am, Cm, Bk, Cf, Es	+	—	derived	1 ! f_d		0.925	0.975
	Cr	CS	—	derived	1 ! f_d ! f_p		0	0.59
	Cr, Fe, Sb	Fe	4	fixed	0			
	Mn	CS	—	derived	1 ! f_d ! f_p		0.72	0.95
		Fe	—	derived	1 ! f_d ! f_p		0.00	0.04
	Fe	CS	4	uniform			0.01	0.03
	Cl, I	+	4	beta	2.7522	8.2543	0	0.5
	Sb, Cs	CS	4	beta	3.906	151.73	0	0.05
f_p	Metal product partitioning factors							
	H	+	4	beta	14.327	128.83	0.05	0.15
	C	CS	—	derived	1 ! f_a		0.27	1.00
	C, Cr, Fe, Co, Ni, Mo, Tc, Ru, Ag, W, Ir	Fe	—	derived	1 ! f_d		0.99	1.00
	P	+	—	derived	1 ! f_d ! f_g		0.09	0.48
	S	+	—	derived	1 ! f_d ! f_g		0.06	0.25
	Na, Cl, K, Ca, Sc, Sr, Y, Zr, Nb, Cd, Ba, Ce, Pm, Sm, Eu, Gd, Tb, Tm, Ta, Ra, Ac, Th, Pa, U, Np, Pu, Am, Cm, Bk, Cf, Es	+	4	fixed	0			
	Cr	CS	4	beta	6.5969	3.0341	0.40	0.97
	Mn	CS	4	beta	4.7375	31.684	0.02	0.24
		Fe	4	beta	423.22	10.894	0.96	0.99
	Fe	CS	—	derived	1 ! f_d ! f_g		0.955	0.985
	Co, Ni, Mo, Tc, Ru, W, Ir	CS	—	derived	1 ! f_d		0.985	0.995
	Zn	CS	4	beta	3.5068	31.533	0	0.2
		Fe	4	uniform			0.01	0.03
	As	+	—	derived	1 ! f_d		0.5	0.9
	Se, Te, Tl, Pb, Bi, Po	CS	4	beta	15.209	288.43	0.025	0.075
	Se	Fe	—	derived	1 ! f_d		0.895	0.965
	Ag	CS	—	derived	1 ! f_d		0.75	0.99
	Sn	+	—	derived	1 ! f_d		0.985	0.995
	Sb	CS	—	derived	1 ! f_d ! f_g		0.75	0.99
		Fe	—	derived	1 ! f_d		0.02	0.06
	Te	Fe	—	derived	1 ! f_d		0.4	0.6
	Os	+	4	beta	15.209	288.43	0.025	0.075
	Tl, Pb	Fe	4	beta	20.239	268.54	0.04	0.10
	Bi	Fe	4	beta	23.793	451.21	0.03	0.07
	Po	Fe	4	fixed	0			

Notes to Table B.2

[a] CS = carbon steel, Fe = cast iron, + = both metals

[b] Alpha parameter of beta distribution, formula for derived value, or fixed value; symbols in formulae shown in column 1

[c] Beta parameter of beta distribution

Table B.3 Mass fractions in iron- and steelmaking

Symbol	Parameter Description/Furnace type	Data quality	Distribution	Mode or fixed value	Min.	Max.
f_s	Mass of scrap as fraction of metal in furnace charge					
	BOF	6	fixed	0.24		
	EAF	6	fixed	0.955		
	Cast iron	6	fixed	0.915		
g_h	Mass of home scrap as fraction of scrap in furnace charge					
	BOF	6	fixed	0.24		
	EAF	6	fixed	0.25		
	Cast iron	6	fixed	0.384		
f_d	Mass of dust generated as fraction of metal poured					
	BOF	3	triangular	0.0175	0	0.031
	EAF	3	triangular	0.0165	0.011	0.022
	Cast iron	5	uniform		0	0.01
f_g	Mass of slag generated as fraction of metal poured					
	BOF	3	triangular	0.12	0.051	0.22
	EAF	3	triangular	0.13	0.12	0.14
	Cast iron	5	uniform		0.016	0.087
,	Efficiency of APCD					
	BOF	4	triangular	0.997	0.994	0.999
	EAF	5	uniform		0.9988	0.9991
	Cast iron	5	uniform		0	0.95

Table B.4 Partitioning of impurities in copper fire refining

Symbol	Parameter description/scenario	Data quality	Distribution	Alpha, fixed value, or formula[a]	Beta[b]	Min.	Max.
f_a	Atmospheric release fractions of volatile elements						
	H, C	4	fixed	1			
	Na, P, S, Cl, K, Ca, Sc, Cr, Mn, Fe, Co, Ni, Zn, As, Se, Sr, Y, Zr, Nb, Mo, Tc, Ru, Ag, Cd, Sn, Sb, Te, I, Cs, Ba, Ce, Pm, Sm, Eu, Gd, Tb, Tm, Ta, W, Os, Ir, Tl, Pb, Bi, Po, Ra, Ac, Th, Pa, U, Np, Pu, Am, Cm, Bk, Cf, Es	4	fixed	0			
f_d	Dust partitioning factors						
	H, C, Na, Ca, Sc, Cr, Mn, Fe, Co, Ni, Sr, Y, Zr, Nb, Mo, Tc, Ru, Ag, Sn, Ba, Ce, Pm, Sm, Eu, Gd, Tb, Tm, Ta, W, Os, Ir, Ra, Ac, Th, Pa, U, Np, Pu, Am, Cm, Bk, Cf, Es	4	fixed	0			
	P, S, K	4	beta	2.626	2.626	0.10	0.90
	Cl, I, Bi	4	beta	3.765	71.395	0	0.1
	Zn, Cd, Sb, Pb	4	beta	3.906	151.73	0	0.05
	As	-	derived	$1 - f_g - f_p$		0.10	0.80
	Se, Te, Cs	-	derived	$1- f_p$		0.80	0.90
	Tl	4	beta	19.358	23.659	0.30	0.60
	Po	-	derived	$1- f_p$		0.500	0.990
f_g	Slag partitioning factors						
	H, C, Se, Ru, Ag, Te, Cs, Os, Ir, Bi, Po	4	fixed	0			
	Na, Ca, Sc, Cr, Sr, Y, Zr, Nb, Mo, Tc, Ba, Ce, Pm, Sm, Eu, Gd, Tb, Tm, Ta, W, Ra	-	derived	$1- f_p$		0.9985	0.9995
	P, S, K	-	derived	$1 - f_d - f_p$		0.0985	0.8995
	Cl, I	-	derived	$1 - f_d$		0.90	1.00
	Mn	-	derived	$1- f_p$		0.95	0.98
	Fe	-	derived	$1- f_p$		0.750	0.980
	Co, Ni	-	derived	$1- f_p$		0.40	0.99
	Zn, Cd	4	beta	44.348	8.452	0.74	0.94
	As	4	beta	3.869	5.802	0.10	0.70
	Sn	-	derived	$1- f_p$		0.60	0.88
	Sb	4	beta	5.282	3.17	0.31	0.94
	Tl	-	derived	$1 - f_d - f_p$		0.20	0.60
	Pb	4	beta	1.776	2.215	0	0.89
	Ac, Np, Pu, Am, Cm, Bk, Cf, Es	-	derived	$1- f_p$		0.99	0.999
	Th, Pa, U	-	derived	$1- f_p$		0.98	0.999

Table B.4 Partitioning of impurities in copper fire refining

Symbol	Parameter description/scenario	Data quality	Distribution	Alpha, fixed value, or formula[a]	Beta[b]	Min.	Max.
f_p	Metal product partitioning factors						
	H, C, Cl, I	4	fixed	0			
	Na, P, S, K, Ca, Sc, Cr, Sr, Y, Zr, Nb, Mo, Tc, Ba, Ce, Pm, Sm, Eu, Gd, Tb, Tm, Ta, W, Ra	4	uniform			0.0005	0.0015
	Mn	4	uniform			0.02	0.05
	Fe	4	beta	4.64	29.71	0.02	0.25
	Co, Ni	4	beta	2.668	6.079	0.01	0.60
	Zn, Cd	-	derived	$1 - f_d - f_g$		0.010	0.260
	As, Se, Te, Cs, Tl	4	beta	30.488	172.67	0.10	0.20
	Ru, Ag, Os, Ir	4	fixed	1			
	Sn	4	beta	9.956	28.33	0.120	0.400
	Sb	-	derived	$1 - f_d - f_g$		0.010	0.690
	Pb	-	derived	$1 - f_d - f_g$		0.06	1
	Bi	-	derived	$1 - f_d$		0.90	1
	Po	4	beta	2.976	8.691	0.01	0.5
	Ac, Np, Pu, Am, Cm, Bk, Cf, Es	4	uniform			0.001	0.010
	Th, Pa, U	4	uniform			0.001	0.020

[a] Alpha parameter of beta distribution, formula for derived value, or fixed value; symbols in formulae shown in column 1

[b] Beta parameter of beta distribution

Table B.5 Mass fractions in fire refining of copper scrap

Symbol	Parameter	Data quality	Distribution	Mean or fixed value	Standard deviation	Min	Max.
f_s	mass of scrap as fraction of metal in furnace charge	4	fixed	1			
g_h	mass of home scrap as fraction of scrap in furnace	4	fixed	0.475			
f_d	mass of dust generated as fraction of metal poured	2	lognormal	0	0.003	0	0
f_g	mass of slag generated as fraction of metal poured	5	uniform			0	0
,	efficiency of APCD	6	fixed	0.92			

Table B.6 Partitioning of impurities in secondary aluminum smelting

Symbol	Parameter description/scenario	Data quality	Distribution	Alpha, fixed value, or formula[a]	Beta[b]	Min.	Max.
f_a	Atmospheric release fractions of volatile elements						
	H	-	derived	$1 - f_p$		0.80	1.00
	C, Na, P, S, Cl, K, Ca, Sc, Cr, Mn, Fe, Co, Ni, Zn, As, Se, Sr, Y, Zr, Nb, Mo, Tc, Ru, Ag, Cd, Sn, Sb, Te, Cs, Ba, Ce, Pm, Sm, Eu, Gd, Tb, Tm, Ta, W, Os, Ir, Tl, Pb, Bi, Po, Ra, Ac, Th, Pa, U, Np, Pu, Am, Cm, Bk, Cf, Es	4	fixed	0			
	I	4	beta	2.752	8.254	0	0.5
f_d	Dust partitioning factors						
	H, C, Na, S, Cl, K, Ca, Sc, Sr, Y, Ru, Ag, I, Cs, Ce, Pm, Sm, Eu, Gd, Tb, Tm, Ra, Ac, Th, Np, Am, Cm, Bk, Cf, Es	4	fixed	0			
	P, Cr, As, Se, Mo, Tc, Sn, Sb, Te, Ta, W, Os, Ir, Tl, Pb, Bi, Po, Pa	4	beta	3.38	23.645	0.00	0.25
	Mn, Fe, Co, Ni, Zn, Nb, Cd, Ba,	4	beta	5.612	96.253	0.01	0.1
	Zr	4	derived	$f_d \div (f_d+f_g+f_p)$		0.00	1.00
	U, Pu	4	beta	3.77	71.40	0.00	0.10
f_g	Dross partitioning factors						
	H, S, Ru, Ag, Cd	4	fixed	0			
	C, Na, K, Ce	-	derived	$1- f_p$		0.90	0.99
	P, Cr, As, Se, Mo, Tc, Sn, Sb, Te, Ta, W, Os, Ir, Tl, Pb, Bi, Po, Pa	4	beta	3.38	23.645	0.00	0.25
	Cl, Sc, Y, Cs, Pm, Sm, Eu, Gd, Tb, Tm, Ra	4	fixed	1			
	Ca, Sr	-	derived	$1- f_p$		0.75	0.99
	Mn, Fe, Co, Ni, Zn, Nb	4	beta	5.612	96.253	0.01	0.10
	Zr	4	derived	$f_g \div (f_d+f_g+f_p)$		0.00	1.00
	I	-	derived	$1- f_a$		0.50	1.00
	Ba	-		$1 - f_d$		0.90	0.99
	Ac, Th, Np, Am, Cm, Bk, Cf, Es	-	derived	$1- f_p$		0.50	0.99
	U, Pu	4	beta	14.809	6.5	0.50	0.89
f_p	Metal product partitioning factors						
	H	4	beta	3.507	31.53	0.00	0.20
	C, Na, K, Ce	4	beta	5.612	96.253	0.01	0.10
	P, Cr, As, Se, Mo, Tc, Sn, Sb, Te, Ta, W, Os, Ir, Tl, Pb, Bi, Po, Pa	-	derived	$1 - f_d - f_g$		0.50	1.00
	S, Ru, Ag	4	fixed	1			
	Cl, Sc, Y, I, Cs, Ba, Pm, Sm, Eu, Gd, Tb, Tm, Ra	4	fixed	0			
	Ca, Sr	4	beta	3.96	26.484	0.01	0.25
	Mn, Fe, Co, Ni, Zn, Nb	-	derived	$1 - f_d - f_g$		0.80	0.98
	Zr	4	derived	$f_p \div (f_d+f_g+f_p)$		0.00	1.00
	Cd	-	derived	$1 - f_d$		0.90	0.99
	Ac, Th, Np, Am, Cm, Bk, Cf, Es	4	beta	2.976	8.691	0.01	0.50
	U, Pu	-	derived	$1 - f_d - f_p$		0.01	0.50

[a] Alpha parameter of beta distribution, formula for derived value, or fixed value; symbols in formulae shown in column 1

[b] Beta parameter of beta distribution

Table B.7 Mass fractions in secondary smelting of aluminum scrap

Symbol	Parameter[a]	Data quality	Distribution	Mean, mode or fixed value	Standard deviation	Min	Max.
f_s	mass fraction of scrap	4	fixed	1			
g_h	mass fraction of heel	5	uniform			0.2	0.4
f_d	mass fraction of dust generated	2	normal	2.15e-03	1.75e-03	0.00048	—
f_{da}	mass fraction of dust released	2	normal	6.5e-04	1.5e-04	0	f_d
f_g	mass fraction of dross generated	4	triangular	0.15		0.09	0.24
$f_{Al,d}$	mass fraction of Al in dust	5	fixed	0.394			
$f_{Al_2O_3,g}$	mass fraction of Al_2O_3 in dross	5	uniform			0.2	0.5
f_{Al,Al_2O_3}	mass fraction of Al in Al_2O_3	1	derived	0.529			

[a] Fraction with respect to metal in furnace charge, unless otherwise noted

Table B.8 Radionuclide-independent parameters of exposure scenarios

Symbol	Parameter description/scenario	Data quality	Distribution	Mean, mode, or fixed value[a]	Standard deviation[b]	Min.	Max.
b_c	soil-specific exponential parameters of contaminated zone						
	all groundwater scenarios	2	lognormal	-0.0253[c]	0.216[d]	0.501	1.9
b_v	soil-specific exponential parameters of vadose zone						
	all groundwater scenarios	2	lognormal	1.06[c]	0.66[d]	0.5	30
B_m, B_{od}	breathing rates for moderate physical activity and for outdoor activities (m^3/h)						
	all scenarios where used	4	triangular	1.2		0.6	1.8
B_s	breathing rate for indoor activities (m^3/h)						
	all scenarios where used	4	triangular	1.2		0.5	1.2
d_1	thickness of surface soil layer (m)						
	Airborne emissions	1	fixed	0.15			
df_h	dilution factor for immobilization process						
	EAF dust disposal	4	fixed	0.77			
df_r	dilution factor						
	Slag basement	5	fixed	0.01			
d_g	depth of slag (m)						
	Leachate–steel slag	6	fixed	1			
d_L	depth of contaminated zone (m)						
	all landfill groundwater scenarios	1	custom[e]			1.32	10.1
d_s	thickness of soil layer available for resuspension (resuspension layer) (m)						
	Airborne emissions	6	fixed	0.01			
d_w	depth of well below water table (m)						
	all groundwater scenarios	1	custom[e]			2.24	35.2
D_z	max height of adjacent buildings (m)						
	Airborne emissions	5	uniform			15	50
D/Q	relative deposition rate: particulates & iodines (m^{-2})						
	Airborne emissions	2	lognormal	0[f]	0[g]	6.0e-09	6.2e-08
f_c	fraction of slag in asphaltic concrete						
	Driving on slag road	5	fixed	0.8			
f_D	plume depletion factor at distance of 1,000 m						
	Airborne emissions	1	fixed	0.9005			

[a] Mode of triangular distribution or fixed value (except as noted)

[b] Standard deviation or geometric standard deviation of lognormal distribution, as noted

[c] Mean value of natural logarithms

[d] Standard deviation of natural logarithms

[e] See Table B.13

[f] Mean value of distribution

[g] Standard deviation of distribution

Table B.8 Radionuclide-independent parameters of exposure scenarios

Symbol	Parameter description/scenario	Data quality	Distribution	Mean, mode, or fixed value[a]	Standard deviation[b]	Min.	Max.
F_d	fraction of EAF dust in waste stream						
	Processing EAF dust	5	fixed	0.75			
	EAF dust disposal	5	fixed	0.75			
f_E	fraction of steel scrap recycled at EAFs						
	Processing EAF dust	2	fixed	0.58			
	EAF dust disposal	2	fixed	0.58			
	home-grown fractions of food—Airborne emissions						
f_{hf}	fruit	4	triangular	0.052		0.027	0.161
f_{hk}	milk	4	triangular	0.043		0.000	0.254
f_{hm}	meat	4	triangular	0.064		0.003	0.319
f_{hf}	all vegetables	4	triangular	0.144		0.027	0.308
f_{H_2O}	fraction of total plant mass that is water						
	Airborne emissions	3	fixed	0.75			
$f_{v,C}$	fraction of total plant mass that is stable carbon						
	Airborne emissions	3	fixed	0.11			
f_w	fraction of waste in landfill volume						
	all scenarios where used	4	fixed	0.8			
F_r	indoor resuspension factor (m^{-1})						
	Airborne emissions	6	fixed	0			
H	absolute humidity of the atmosphere at receptor (g/m^3)						
	Airborne emissions	4	triangular	7.0		3.0	16.0
h_e	effective release height (m)						
	Airborne emissions	1	fixed	0			
I	infiltration rate (m/y)						
	all groundwater scenarios	3	custom[c]			0	0.0526
I_s	secondary ingestion rate (g/h)						
	all scenarios where used	5	uniform			0.0e+00	2.0e-02
I_w	daily intake of tapwater (mL/d)						
	all groundwater scenarios	2	lognormal	6.864[d]	0.575	196	4732
J K_{sa}	seepage velocity (m/y) = hydraulic gradient (J) × saturated hydraulic conductivity of aquifer (K_{sa})						
	all groundwater scenarios	3	custom[c]			0.10	10,800
K_{sv}	saturated hydraulic conductivity of vadose zone (m/y)						
	all scenarios where used	3	custom[c]			0.004	2450

[a] Mode of triangular distribution or fixed value (except as noted)

[b] Standard deviation of natural logarithms

[c] See Table B.13

[d] Mean value of natural logarithms

Table B.8 Radionuclide-independent parameters of exposure scenarios

Symbol	Parameter description/scenario	Data quality	Distribution	Mean, mode, or fixed value[a]	Standard deviation[b]	Min.	Max.
$\dot{m}_g$	rate of slag utilization (t/d)						
	Building road with slag	4	fixed	1279			
m_L	mass of load (tons)						
	Transferring EAF dust	3	fixed	22			
	Scrap truck–driver	3	fixed	20			
	Slag truck–driver	3	fixed	22			
	EAF dust–bulk trailer	3	fixed	22			
	EAF dust–dump trailer	3	fixed	22			
	Metal product–driver	3	fixed	22			
m_p	maximum size of slag pile (Mg)						
	Leachate–steel slag	5	fixed	23000			
M_t	mass of EAF dust generated in U.S. annually (g)						
	all scenarios where used	3	fixed	8.39e+11			
N_d	number of drivers						
	Scrap truck–driver	5	uniform			6	8
n_D	number of nuclear plants undergoing dismantlement annually						
	Processing EAF dust	2	custom[c]			1	18
	EAF dust disposal	2	custom[c]			1	18
P	areal soil density (kg dry&weight soil/m^2)						
	all scenarios where used	4	fixed	240			
P_d	indoor dust-loading on floors (g/m^2)						
	all scenarios where used	6	fixed	0.4			
p_{ea}	effective porosity of aquifer						
	all groundwater scenarios	3	custom[d]			0.05	0.426
p_{ev}	effective porosity of vadose zone						
	all groundwater scenarios	3	normal	0.355	0.0906	0.075	0.635
p_{ta}	total porosity of aquifer						
	all groundwater scenarios	3	normal	0.43	0.06	0.2446	0.6154
p_{tv}	total porosity of vadose zone						
	all groundwater scenarios	3	custom[d]			0.41	0.45
r	fraction of deposited activity intercepted by crops—Airborne emissions						
	iodines	4	fixed	1.0			
	other particulates	4	fixed	0.25			
r_{H-3}	ratio of tritium concentration in plant water to tritium concentration in atmospheric water						
	Airborne emissions	6	fixed	0.5			

[a] Mode of normal or triangular distributions, or fixed value (except as noted)

[b] Standard deviation of normal distribution

[c] See Table D.9

[d] See Table B.13

Table B.8 Radionuclide-independent parameters of exposure scenarios

Symbol	Parameter description/scenario	Data quality	Distribution	Mean, mode, or fixed value[a]	Standard deviation[b]	Min.	Max.
S_{sx}	indoor shielding factor (dimensionless)						
	Airborne emissions	5	uniform			0.04	0.70
S_{vx}	Vehicle shielding factor (dimensionless)						
	all scenarios where used	5	triangular	0.5		0.3	0.7
T	period during which mill is recycling cleared scrap (y)						
	all scenarios where used	6	fixed	1.7			
t_a	assessment period (d)						
	all scenarios where used	1	fixed	365.25			
t_b	period of long&term buildup for activity in soil (d)						
	Airborne emissions	6	fixed	621			
t_{dd}	time spent on dusty activities outdoors (h/mo)						
	Airborne emissions	3	custom[c]			0	320
t_{dw}	time driving with one-way load (h/w)						
	Slag truck–driver	3	triangular	24.5		15	32.5
	EAF dust–dump trailer	3	triangular	26		19	33.5
$\overline{t_{dw}}$	average time driving with one-way load (h/w)						
	Slag truck–driver	3	fixed	24.5			
	EAF dust–dump trailer	3	fixed	26			
	Metal product–driver	3	fixed	26			
t_{dw}	time in driver's seat (h/w)						
	Driver–diesel engine	4	triangular	54		41	70
t_{gv}	growing period for plant v (d)—Airborne emissions						
	leafy vegetables	6	fixed	45			
	non-leafy vegetables	6	fixed	90			
	fruit	6	fixed	90			
	stored hay	6	fixed	45			
	stored grain	6	fixed	90			
	fresh forage	6	fixed	30			
t_h	holdup period between harvesting and consumption (d)—Airborne emissions						
	fruit	6	fixed	14			
	leafy vegetables	6	fixed	1			
	non-leafy vegetables	6	fixed	14			
	grain	6	fixed	14			
	meat	6	fixed	20			
	milk	6	fixed	1			

[a] Mode of triangular distribution, or fixed value

[b] Not used

[c] See Table B.12

Table B.8 Radionuclide-independent parameters of exposure scenarios

Symbol	Parameter description/scenario	Data quality	Distribution	Mean, mode, or fixed value[a]	Standard deviation[b]	Min.	Max.
t_{id}	time spent indoors (min/d)						
	Airborne emissions	2	normal	1001.4	275.14	8	1440
t_{it}	time spent loading and unloading truck (hours/trip)						
	all transport scenarios where used	5	uniform			0.25	0.5
t_{md}	max time permitted driving without an 8-h rest period						
	EAF dust–dump trailer	6	fixed	10			
t_{od}	time spent outdoors (min/d)						
	Airborne emissions	2	normal	154	158.3	1.0	1290
t_s	time from release of cleared material from nuclear facility to time scenario begins (d)						
	Scrap yard	5	uniform			3	17
	Handling slag (EAF)	5	uniform			10	56
	Handling slag (BOF)	5	uniform			10	40
	Baghouse maintenance	5	uniform			10	56
	Transferring EAF dust	5	uniform			10	56
	Processing EAF dust	5	uniform			11	67
	Processing steel slag (EAF)	5	uniform			13	241
	Processing steel slag (BOF)	5	uniform			13	225
	Handling metal product (EAF & other)	5	uniform			8	52
	Handling metal product (BOF)	5	uniform			8	36
	Airborne emissions (EAF & other)	5	uniform			8	52
	Airborne emissions (BOF)	5	uniform			8	36
	Building road with slag (EAF)	5	uniform			195	242
	Building road with slag (BOF)	5	uniform			195	226
	Exposure to large mass (EAF & other)	5	uniform			23	123
	Exposure to large mass (BOF)	5	uniform			23	93
	Exposure to small mass (EAF)	5	uniform			23	123
	Exposure to small mass (BOF)	5	uniform			23	93
	Steel object on body (EAF)	5	uniform			23	123
	Steel object on body (BOF)	5	uniform			23	93
	Driver–automobile	5	uniform			26	175
	Home with steel studs (EAF)	5	uniform			113	303
	Home with steel studs (BOF)	5	uniform			113	273
	Sailor–hull plate (EAF)	5	uniform			555	600
	Sailor–hull plate (BOF)	5	uniform			555	584
	Driver–diesel engine	5	uniform			26	175
	Slag basement (EAF)	5	uniform			115	279
	Slag basement (BOF)	5	uniform			115	263

[a] Mode of normal distribution or fixed value

[b] Standard deviation of normal distribution

Table B.8 Radionuclide-independent parameters of exposure scenarios

Symbol	Parameter description/scenario	Data quality	Distribution	Mean, mode, or fixed value[a]	Standard deviation[b]	Min.	Max.
t_s	time from release of cleared material from nuclear facility to time scenario begins (d)						
	Driving on slag road (EAF)	5	uniform			196[c]	243[c]
	Driving on slag road (BOF)	5	uniform			196[c]	227[c]
	Scrap truck–driver	5	uniform			2	6
	Slag truck–driver (EAF & other)	5	uniform			12	59
	Slag truck–driver (BOF)	5	uniform			12	43
	EAF dust–bulk trailer	5	uniform			10	60
	EAF dust–dump trailer	5	uniform			10	60
	Metal product–driver (EAF & other)	5	uniform			8	86
	Metal product–driver (BOF)	5	uniform			8	56
	Scrap disposal–industrial	5	uniform			2	7
	Scrap disposal–municipal	5	uniform			2	7
	Dust disposal-industrial (BOF)	5	uniform			12	46
	Dust disposal-industrial (other)	5	uniform			12	62
	Dust disposal-municipal (BOF)	5	uniform			12	46
	Dust disposal-municipal (other)	5	uniform			13	73
	Slag disposal–industrial (EAF & other)	5	uniform			12	62
	Slag disposal–industrial (BOF)	5	uniform			12	46
	Leachate–steel slag (EAF)	5	uniform			13	59
	Leachate–steel slag (BOF)	5	uniform			13	43
	EAF dust disposal	5	uniform			13	73
	All landfill leachate scenarios	6	fixed	0.85 y			
t_t	duration of trip (h)						
	Scrap truck–driver	5	uniform			1	1.5
t_{tr}	transfer time of EAF dust (h)						
	Transferring EAF dust	5	uniform			0.5	1
t_v	time spent in automobile (min/d)						
	Driving on slag road	2	custom[d]			1	1,280
t_w	time in driver's seat hauling one-way load (h/w)						
	Slag truck–driver	3	triangular	26.5		17.7	34.2
	EAF dust–drivers	3	triangular	28		22	36.5
	Metal product–driver	3	triangular	28		22	36.5

[a] Mode of triangular distribution or fixed value

[b] Not used

[c] In addition to time needed to construct road (calculated)

[d] See Table B.12

Table B.8 Radionuclide-independent parameters of exposure scenarios

Symbol	Parameter description/scenario	Data quality	Distribution	Mean, mode, or fixed value[a]	Standard deviation[b]	Min.	Max.
$\overline{t_w}$	average time in driver's seat hauling one-way load (h/w)						
	Slag truck–driver	3	fixed	26.5			
	EAF dust–drivers	3	fixed	28			
	Metal product–driver	3	fixed	28			
t_{xd}	daily exposure duration (h/d)						
	Scrap yard	5	uniform			4	6
	Handling slag	5	uniform			2	6
	Baghouse maintenance	5	uniform			4	6
	Processing EAF dust	5	uniform			2	6
	Processing steel slag	5	uniform			2	6
	Handling metal product	5	uniform			4	8
	Slag basement	5	triangular	16		4	16
	Exposure to large mass	5	triangular	4		2	8
	Exposure to small mass	5	triangular	4		2	8
	Steel object on body	5	triangular	5		2.9	16.0
	Driver–automobile	5	uniform			6.3	11.5
	Home with steel studs	5	triangular	8		4	16
	Sailor–hull plate (bunk)	5	uniform			7.0	9.4
	Sailor–hull plate (lounge)	5	uniform			0.5	1.5
	Building road with slag	1	fixed	8			
	Scrap disposal–industrial	5	uniform			5	7
	Scrap disposal–municipal	5	uniform			5	7
	Dust disposal-industrial	5	uniform			5	7
	Dust disposal-municipal	5	uniform			5	7
	Slag disposal–industrial	5	uniform			5	7
	Slag disposal–municipal	5	uniform			5	7
	EAF dust disposal	5	uniform			5	7
t_{ys}	annual exposure duration (d/y)						
	Baghouse maintenance	5	uniform			1	10
	Slag basement	5	fixed	350			
	Exposure to large mass	5	fixed	350			
	Exposure to small mass	5	fixed	350			
	Steel object on body	5	fixed	350			
	Driver–automobile	5	fixed	300			
	Home with steel studs	5	fixed	350			
	Steel ship scenarios	4	custom[c]	330		309	351
	Sailor–hull plate	4	triangular	300		183	335

[a] Mode of triangular, mean of custom distribution, or fixed value

[b] Not used

[c] See Section 3.7.4.1 in main report

Table B.8 Radionuclide-independent parameters of exposure scenarios

Symbol	Parameter description/scenario	Data quality	Distribution	Mean, mode, or fixed value[a]	Standard deviation[b]	Min.	Max.
t_{ys}	annual exposure duration (d/y)						
	Driver–diesel engine	5	uniform			200	250
	all other scenarios where used	6	fixed	250			
	human consumption rates—Airborne emissions						
U_f	fruit (kg/y)	3	fixed	56.98			
U_k	milk (L/y)	3	fixed	81.8			
U_l	leafy vegetables (kg/y)	3	fixed	16.97			
U_m	meat (kg/y)	3	fixed	70.5			
U_s	soil (kg/y)	3	fixed	0.01826			
U_v	non-leafy vegetables (kg/y)	3	fixed	48.4			
U_w	well pumping rate (m^3/a)						
	Leachate–steel slag	5	uniform	-		250	1500
U_x	uncertainty parameter for external exposure						
	Scrap yard	5	uniform			0.4	1.6
	Handling slag	5	uniform			0.5	1.0
	Baghouse maintenance	5	uniform			0.9	1.1
	Transferring EAF dust	5	uniform			0.9	1.1
	Processing EAF dust	5	uniform			0.6	1.4
	Processing steel slag	5	uniform			0.6	1.4
	Handling metal product	5	uniform			0.2	1.8
	Driving on slag road	5	fixed	1			
	Slag basement	5	uniform			0.9	1.1
	Exposure to large mass	5	uniform			0.2	1.8
	Exposure to small mass	5	custom[c]			0.1	10
	Steel object on body	5	uniform			0.7	1.3
	Driver–automobile	5	uniform			0.9	1.1
	Home with steel studs	5	uniform			0.9	1.1
	Sailor–hull plate (bunk)	5	uniform			0.87	1.13
	Sailor–hull plate (center)	4	fixed	1			
	Steel ship scenarios	1	fixed	1			
	Driver–diesel engine (driving)	5	uniform			0.8	1.2
	Driver–diesel engine (sleeping)	5	uniform			0.9	1.1
	Building road with slag	5	fixed	1			
	Scrap truck–driver	5	uniform			0.7	1.3
	Slag truck–driver	5	uniform			0.7	1.3
	EAF dust–bulk trailer	5	uniform			0.8	1.2
	EAF dust–dump trailer (driving)	5	uniform			0.88	1.12

[a] Fixed value

[b] Not used

[c] See Section C.2.6

Table B.8 Radionuclide-independent parameters of exposure scenarios

Symbol	Parameter description/scenario	Data quality	Distribution	Mean, mode, or fixed value[a]	Standard deviation[b]	Min.	Max.
U_x	uncertainty parameter for external exposure						
	EAF dust–dump trailer (sleeping)	5	uniform			0.91	1.09
	Metal product–driver	5	uniform			0.7	1.3
	all disposal scenarios	1	fixed	1			
v	average speed (mph)						
	Driving on slag road	3	fixed	33.6			
	Slag truck–driver	5	uniform			40	50
	EAF dust–bulk trailer	4	triangular	50		40	60
	EAF dust–dump trailer	4	triangular	50		40	60
	Metal product–driver	4	triangular	50		40	60
w	width of typical highway (m)						
	Driving on slag road	3	fixed	7.315			
X	distance traveled (miles)						
	Slag truck–driver	6	fixed	60			
	EAF dust–bulk trailer	4	triangular	1000		65	2000
	EAF dust–dump trailer	4	triangular	1000		65	2000
	Metal product–driver	4	custom[c]	276		50	2000
x	distance from release point to receptor (m)						
	Airborne emissions	1	fixed	1000			
x_o	distance from landfill boundary to nearest receptor well (m)						
	all groundwater scenarios	3	custom[d]			0.6	1609.3
Y_v	yield of plant v (kg wet&weight plant/m^2): Airborne emissions						
	fruit	4	fixed	2.0			
	leafy vegetables	4	fixed	2.0			
	non-leafy vegetables	4	fixed	4.0			
	stored hay	4	fixed	1.5			
	stored grain	4	fixed	1.0			
	fresh forage	4	fixed	1.5			
) z	thickness of vadose zone (m)						
	all groundwater scenarios	3	custom[d]			0.305	610
8$_r$	turnover rate of slag (y^{-1})						
	Leachate–steel slag	6	fixed	2			
8$_w$	weathering constant at harvest (d^{-1})						
	fresh forage	4	fixed	0.0495			
D$_a$	bulk density of aquifer (g/cm^3)						
	all groundwater scenarios	3	custom[d]			1.16	1.8

[a] Mode of triangular, mean of custom distribution, or fixed value

[b] Not used

[c] X = 50 + 1950 Beta (**"**, **$**), **"** = 0.476934, **$** = 3.638114

[d] See Table B.13

Table B.8 Radionuclide-independent parameters of exposure scenarios

Symbol	Parameter description/scenario	Data quality	Distribution	Mean, mode, or fixed value[a]	Standard deviation[b]	Min.	Max.
D_g	specific gravity (bulk density [g/cm^3]) of slag						
	all scenarios where used	6	fixed	2			
D_v	bulk density of vadose zone (g/cm^3)						
	all groundwater scenarios	3	custom[c]			1.6	1.67
D_w	waste density (g/cm^3)						
	all groundwater landfill scenarios	3	custom[c]			0.7	2.08
P/Q	annual average atmospheric dispersion factor (s/m^3)						
	Airborne emissions	2	lognormal	4.605e-06[d]	1.837e-06[e]	1.1e-06	1.7e-05
P_C	concentration of stable carbon (as CO_2) in the atmosphere (g/m^3)						
	Airborne emissions	2	fixed	0.16			
P_d	mass loading of material (mg/m^3)						
	Scrap yard	2	custom[f]	1.170	0.078	0.962	1.378
	Handling slag	4	lognormal	2.433	1.27		5.0
	Transferring EAF dust	4	lognormal	2.433	1.27		5.0
	Handling metal product	4	lognormal	2.433	1.27		5.0
	Processing EAF dust	4	lognormal	2.433	1.27		5.0
	Processing steel slag	4	lognormal	2.433	1.27		5.0
	Building road with slag	4	lognormal	2.433	1.27		5.0
	Slag truck–driver	4	lognormal	4.78	2.65		
	EAF dust–dump trailer	4	lognormal	2.433	1.27		5.0
	Slag disposal–industrial	4	lognormal	2.433	1.27		5.0
	Slag disposal–municipal	4	lognormal	2.433	1.27		5.0
P_{dd}, P_s	concentration of resuspended soil for dusty activities outdoors and soil blown indoors (g/m^3)						
	Airborne emissions	2	lognormal	0.003	1.45	0	—
P_{do}	concentration of resuspended soil for normal activities outdoors (g/m^3)						
	Airborne emissions	5	uniform			1e-05	2e-03

[a] Mode of lognormal, mean of custom distribution, or fixed value (except as noted)

[b] Standard deviation of custom distribution, or geometric standard deviation of lognormal distribution (except as noted)

[c] See Table B.13

[d] Mean of distribution

[e] Standard deviation of distribution

[f] See Section 3.7.1.1 in main report

Table B.9 Radionuclide-independent parameters specific to copper scenarios

Symbol	Parameter description/scenario	Data quality	Distribution	Mode or fixed value	F_D, F_g [a]	Min.	Max.
C_{Cu}	concentration of Cu in H_2O (g/mL)						
	Drinking ! copper pipes	4	triangular	3.0e-07		2e-07	0
f_{fr}	fraction of Cu scrap consumed by fire-refining furnaces (dimensionless)						
	Airborne emissions	3	fixed	0.286			
I_s	secondary ingestion rate (g/h)						
	Scrap yard, handling metal product	5	uniform			0	4.0e-03
m_{Cu}	mass of Cu scrap cleared from 1 reactor (g)						
	all scenarios where used	4	fixed	6.2e+07			
M_{fr}	combined capacity of all U.S. fire-refining facilities (g)						
	Airborne emissions	3	fixed	2.71e+11			
N_R	number of reactors scheduled for dismantlement						
	Airborne emissions	1	fixed	118			
t_s	time from release of cleared material from nuclear facility to time scenario begins (d)						
	Scrap yard	5	uniform			3	36
	Handling metal product	5	uniform			4	41
	Handling slag	5	uniform			4	41
	Baghouse maintenance	5	uniform			4	41
	Airborne emissions	5	uniform			4	41
	Scrap truck ! driver	5	uniform			2	6
	Metal product ! driver	5	uniform			7	71
	Slag truck ! driver	5	uniform			6	44
	Dust truck ! driver	5	uniform			34	101
	Exposure to small mass	5	uniform			17	131
	Copper object on body	5	uniform			17	131
	Drinking ! copper pipes	5	uniform			17	341
	Scrap disposal ! industrial & municipal	5	uniform			3	13
	Slag disposal ! industrial & municipal	5	uniform			7	51
t_{ys}	exposure duration (d/y)						
	Drinking ! copper pipes	4	triangular	300		250	300
U_x	uncertainty parameter for external exposure						
	Scrap yard	5	uniform			0.36	1.64
	Handling slag	5	fixed	1			
	Metal product ! driver (driver's seat)	5	uniform			0.9	1.1
	Metal product ! driver (sleeper)	5	uniform			0.93	1.07
v	average speed (mph)						
	all transportation scenarios	4	triangular	50		40	60
X	distance traveled (mi)						
	Scrap, slag, and dust trucks ! driver	2	normal	130	15.1	50	—
	Metal product ! driver	2	lognormal	393	40.09	50	2000
P_d	mass loading of material (mg/m^3)						
	Scrap yard, handling metal product	4	lognormal	0.4865	0.127218		1.0
	Handling slag	4	lognormal	1.2162	0.127218		2.5

[a] Standard deviation of normal distribution, geometric standard deviation of lognormal

Table B.10 Radionuclide-independent parameters specific to aluminum scenarios

Symbol	Parameter description/scenario	Data quality	Distribution	Mean, mode, or fixed value[a]	F_D[b]	Min.	Max.
m_{Al}	intake of aluminum from cookware (g/d)						
	Aluminum cookware	6	fixed	3.5e-03			
M_{Al}	mass of Al scrap cleared from 1 reactor (g)						
	all scenarios where used	5	uniform			1.2e+06	2.0e+06
t_s	time from release of cleared material from nuclear facility to time scenario begins (d)						
	Scrap yard	5	uniform			3	36
	Baghouse maintenance	5	uniform			4	51
	Handling metal product	5	uniform			4	51
	Dross handling	5	uniform			4	51
	Airborne emissions	5	uniform			4	51
	Scrap truck ! driver	5	uniform			2	6
	Metal product ! driver	5	uniform			7	81
	Dross and dust truck ! driver	5	uniform			34	111
	Scrap disposal	5	uniform			3	13
	Dross disposal	5	uniform			35	118
	Exposure to large or small mass	5	uniform			17	141
	Driver ! engine block	5	uniform			25	204
	Aluminum cookware	5	uniform			17	141
t_{xs}	daily exposure duration						
	Exposure to large mass (h/d)	4	triangular	4		2	7
	Aluminum cookware (min/d)	2	lognormal	52.37	52.9	1.00	—
t_{ys}	exposure duration (d/y)						
	Exposure to large mass	6	fixed	250			
	Aluminum cookware	1	fixed	365			
U_x	uncertainty parameter for external exposure						
	Scrap yard	5	uniform			0.5	1.5
	Dross handling	5	uniform			0.4	1.6
	Cookware	5	fixed	1			
	Exposure to small mass	5	custom[c]	1		0.2	6.62
	Dust truck—driver	5	uniform			0.7	1.3
v	average speed (mph)						
	all transportation scenarios	4	triangular	50		40	60
X	distance traveled (mi)						
	Scrap, dross, and dust truck ! driver	2	normal	130	15.1	50	—
	Metal product ! driver	2	lognormal	393	40.1	50	2000
P_d	mass loading of material (mg/m^3)						
	All handling & disposal scenarios, where used	4	lognormal	2.433[d]	1.27[e]	—	5.0

[a] Mode of triangular, mean of custom, normal or lognormal distributions, unless otherwise noted
[b] Standard deviation, unless otherwise noted
[c] See Section C.4.4
[d] Geometric mean
[e] Geometric standard deviation

Table B.11 Radionuclide-independent parameter definitions specific to concrete scenarios

Symbol	Parameter description/scenario	Data quality	Distribution	Mean, mode, or fixed value[a]	Standard deviation	Min.	Max.
$\dot{A}$	rate of road production (m^2/d)						
	concrete road scenarios	4	fixed	1657			
P_{d10}	8-hour time-weighted average limit of respirable concrete dust (mg/m^3)						
	all scenarios where parameter is used	4	lognormal	0.07	0.017	—	0.14
X	distance traveled (mi)						
	Truck driver	2	normal	231	24.3	50	
d_b	thickness of road base (cm)						
	concrete road scenarios	4	fixed	30.5			
d_c	thickness of concrete (cm)						
	concrete road scenarios	4	fixed	10.2			
f_c	fraction of recycled concrete material in asphaltic concrete						
	concrete road scenarios	4	triangular	0.24		0.1	0.8
t_s	time from release of cleared material from nuclear facility to time scenario begins (d)						
	Processing concrete	5	uniform			2	30
	Truck driver	5	uniform			3	60
	Road building	5	uniform			4	75
	Driving on road	5	uniform			5[b]	76[b]
	Disposal ! industrial	5	uniform			4	67
	Disposal ! MSW	5	uniform			4	67
t_{yh}	weekly exposure duration (h/wk)						
	Truck driver	4	triangular	28		22	36.5
U_x	uncertainty in geometry factor (dimensionless)						
	Processing concrete	5	uniform			0.6	1.4
	Truck driver	5	uniform			0.7	1.3
D_b	bulk density of RCM (g/cm^3)						
	concrete road scenarios	3	fixed	1.4			
D_c	mass density of concrete (g/cm^3)						
	concrete road scenarios	2	fixed	2.4			

[a] Mean of lognormal, mode of triangular distributions

[b] In addition to time needed to construct road (calculated)

Table B.12 Time spent on various activities: continuous cumulative distributions

Symbol	Parameter description	Percentile/ time									
t_{dd}	time spent on dusty activities outdoors (h/mo)										
	CDF (%)	5	75	90	95	98	99	100			
	Value (h/mo)	0	3	15	40	88	160	320			
t_y	time spent in automobile (min/d)										
	CDF (%)	0	5	25	50	75	90	95	98	99	100
	Value (min/d)	1	10	34	63	110	175	240	345	450	1280

Note: Continuous cumulative distributions are described in Section B.2.6

Table B.13 Hydrogeological parameters: custom distributions

Symbol	Parameter description	CDF (%)						
		0	10	25	50	75	90	100
I	infiltration rate (m/y) (# K_{sv})							
Value[a]		1.00e-05	1.88e-02	3.50e-02	4.32e-02	4.77e-02	4.86e-02	5.26e-02
J K_{sa}	seepage velocity (m/y)							
Logarithm[b]		-2.30259	0.770108	2.155245	3.735286	5.393628	6.984716	9.287301
K_{sv}	saturated hydraulic conductivity of vadose zone (m/y)							
Logarithm		-5.58068	-0.51751	0.732368	2.076938	3.575151	5.123964	7.803843
p_{ea}	effective porosity of aquifer							
Value		0.05	0.103	0.163	0.236	0.296	0.334	0.426
) z	thickness of vadose zone (m)							
Logarithm		-1.18744	0.41871	1.115142	1.673351	2.639057	3.417727	6.413459
D_a	bulk density of aquifer (g/cm^3)							
Value		1.16	1.29	1.43	1.56	1.63	1.7	1.8
D_w	waste density (g/cm^3)							
Logarithm		-0.35667	-0.30653	-0.23319	-0.11991	0.285179	0.378436	0.732368
d_L	depth of contaminated zone (m)							
CDF (%)		0	33.33333	66.66667	86.66667	100		
Logarithm		0.277632	0.951658	1.408545	1.822935	2.312535		
d_w	depth of well below water table (m)							
CDF (%)		0	38.46154	76.92308	100			
Logarithm		0.806476	1.702928	2.587764	3.561046			
p_{tv}	total porosity of vadose zone							
Probability (%)		10	40	50				
Value (discrete)		0.41	0.43	0.45				
D_v	bulk density of vadose zone (g/cm^3)							
Probability (%)		10	65	25				
Value (discrete)		1.6	1.65	1.67				

Note: All parameters have continuous cumulative distributions except p_{tv} and D_v, which have discrete distributions. These distributions are described in Section B.2.6.

[a] Value of parameter corresponding to each percentile

[b] " Logarithm" = natural logarithm of parameter value

Table B.14 Distance from landfill boundary to nearest well: continuous cumulative distribution

x_o (m)	CDF (%)	x_o (m)	CDF (%)	x_o (m)	CDF (%)
0.6	0	304.8	30	804.6	70
13.7	3	304.8	35	868.6	75
19.8	4	365.7	40	914.4	80
45.7	5	396.2	45	1158.2	85
103.6	10	426.7	50	1219.1	90
152.4	15	457.2	55	1371.5	95
182.9	20	609.6	60	1523.9	98
243.8	25	762.0	65	1609.3	100

Note: Continuous cumulative distributions are described in Section B.2.6

Table B.15 Radioactive decay data

Nuclide	Half-life	**8** (d^{-1})	Nuclide	Half-life	**8** (d^{-1})
H-3	12.35 y	1.54e-04	Sm-151	90 y	2.11e-05
C-14	5730 y	3.31e-07	Eu-152	13.33 y	1.42e-04
Na-22	2.60 y	7.29e-04	Eu-154	8.8 y	2.16e-04
P-32	14.29 d	4.85e-02	Eu-155	4.96 y	3.83e-04
S-35	87.44 d	7.93e-03	Gd-153	242 d	2.86e-03
Cl-36	3.01e+05 y	6.30e-09	Tb-160	72.3 d	9.59e-03
K-40	1.28e+09 y	1.48e-12	Tm-170	128.6 d	5.39e-03
Ca-41	1.40e+05 y	1.36e-08	Tm-171	1.92 y	9.88e-04
Ca-45	163 d	4.25e-03	Ta-182	115 d	6.03e-03
Sc-46	83.83 d	8.27e-03	W-181	121.2 d	5.72e-03
Cr-51	27.704 d	2.50e-02	W-185	75.1 d	9.23e-03
Mn-53	3.70e+06 y	5.13e-10	Os-185	94 d	7.37e-03
Mn-54	312.5 d	2.22e-03	Ir-192	74.02 d	9.36e-03
Fe-55	2.7 y	7.03e-04	Tl-204	3.779 y	5.02e-04
Fe-59	44.53 d	1.56e-02	Pb-210	22.3 y	8.51e-05
Co-56	78.76 d	8.80e-03	Bi-207	38 y	4.99e-05
Co-57	270.9 d	2.56e-03	Po-210	138.376 d	5.01e-03
Co-58	70.8 d	9.79e-03	Ra-226	1600 y	1.19e-06
Co-60	5.271 y	3.60e-04	Ra-228	5.75 y	3.30e-04
Ni-59	75,000 y	2.53e-08	Ac-227	21.772 y	8.72e-05
Ni-63	96 y	1.98e-05	Th-228	1.9131 y	9.92e-04
Zn-65	243.9 d	2.84e-03	Th-229	7340 y	2.59e-07
As-73	80.3 d	8.63e-03	Th-230	75380 y	2.52e-08
Se-75	119.8 d	5.79e-03	Th-232	1.410e+10 y	1.35e-13
Sr-85	64.84 d	1.07e-02	Pa-231	32,760 y	5.79e-08
Sr-89	50.5 d	1.37e-02	U-232	68.9 y	2.75e-05
Sr-90	28.78 y	6.59e-05	U-233	159,200 y	1.19e-08
Y-91	58.51 d	1.18e-02	U-234	2.455e+06 y	7.73e-10
Zr-93	1.53e+06 y	1.24e-09	U-235	704000000 y	2.70e-12
Zr-95	64.02 d	1.08e-02	U-236	2.3415e+07 y	8.10e-11
Nb-93m	16.13 y	1.18e-04	U-238	4.470e+09 y	4.25e-13
Nb-94	20,300 y	9.35e-08	Np-237	2.14e+06 y	8.87e-10
Nb-95	34.975 d	1.98e-02	Pu-236	2.858 y	6.64e-04
Mo-93	4,000 y	4.74e-07	Pu-238	87.7 y	2.16e-05
Tc-97	2.60e+06 y	7.30e-10	Pu-239	24,110 y	7.87e-08
Tc-97m	87 d	7.97e-03	Pu-240	6,563 y	2.89e-07
Tc-99	2.13e+05 y	8.91e-09	Pu-241	14.35 y	1.32e-04
Ru-103	39.26 d	1.77e-02	Pu-242	373000000 y	5.09e-12
Ru-106	373.59 d	1.86e-03	Pu-244	8.08e+07 y	2.35e-11
Ag-108m	418 y	4.54e-06	Am-241	432.2 y	4.39e-06
Ag-110m	249.79 d	2.77e-03	Am-242m	141 y	1.35e-05
Cd-109	462.6 d	1.50e-03	Am-243	7370 y	2.57e-07
Sn-113	115.09 d	6.02e-03	Cm-242	162.8 d	4.26e-03
Sb-124	60.2 d	1.15e-02	Cm-243	29.1 y	6.52e-05
Sb-125	2.7582 y	6.88e-04	Cm-244	18.1 y	1.05e-04
Te-123m	119.7 d	5.79e-03	Cm-245	8,500 y	2.23e-07
Te-127m	109 d	6.36e-03	Cm-246	4,730 y	4.01e-07
I-125	60.14 d	1.15e-02	Cm-247	1.56e+07 y	1.22e-10
I-129	1.57e+07 y	1.21e-10	Cm-248	3.39e+05 y	5.60e-09
I-131	8.04 d	8.62e-02	Bk-249	320 d	2.17e-03
Cs-134	2.062 y	9.20e-04	Cf-248	333.5 d	2.08e-03
Cs-135	2.30e+06 y	8.25e-10	Cf-249	351 y	5.41e-06
Cs-137	30.07 y	6.31e-05	Cf-250	13.08 y	1.45e-04
Ba-133	10.74 y	1.77e-04	Cf-251	898 y	2.11e-06
Ce-139	137.66 d	5.04e-03	Cf-252	2.638 y	7.19e-04
Ce-141	32.501 d	2.13e-02	Cf-254	60.5 d	1.15e-02
Ce-144	0.781 y	2.43e-03	Es-254	275.7 d	2.51e-03
Pm-147	2.6234 y	7.23e-04			

Table B.16 Dose conversion factors for inhalation—effective dose equivalent (:Sv/Bq)

Nuclide	Scrap/ concrete	Metal product			Slag/dross/dust/airborne		
		Iron/steel	Copper	Aluminum	Iron/steel	Copper	Aluminum
H-3	1.73e-05	1.73e-05	1.73e-05	1.73e-05	1.73e-05	1.73e-05	1.73e-05
C-14	5.64e-04	5.64e-04	5.64e-04	5.64e-04	6.36e-06	5.64e-04	5.64e-04
Na-22	2.07e-03	2.07e-03	2.07e-03	2.07e-03	2.07e-03	2.07e-03	2.07e-03
P-32	4.19e-03	1.64e-03	1.64e-03	1.64e-03	1.64e-03	1.64e-03	1.64e-03
S-35	6.69e-04	8.15e-05	6.69e-04	8.15e-05	6.69e-04	6.69e-04	6.69e-04
Cl-36	5.93e-03	5.93e-03	5.93e-03	5.93e-03	5.93e-03	5.93e-03	5.93e-03
K-40	3.34e-03	3.34e-03	3.34e-03	3.34e-03	3.34e-03	3.34e-03	3.34e-03
Ca-41	3.64e-04	3.64e-04	3.64e-04	3.64e-04	3.64e-04	3.64e-04	3.64e-04
Ca-45	1.79e-03	1.79e-03	1.79e-03	1.79e-03	1.79e-03	1.79e-03	1.79e-03
Sc-46	8.01e-03	8.01e-03	8.01e-03	8.01e-03	8.01e-03	8.01e-03	8.01e-03
Cr-51	9.03e-05	9.03e-05	9.03e-05	9.03e-05	9.03e-05	9.03e-05	9.03e-05
Mn-53	1.35e-04	1.35e-04	1.35e-04	1.35e-04	1.35e-04	1.35e-04	1.35e-04
Mn-54	1.81e-03	1.81e-03	1.81e-03	1.81e-03	1.81e-03	1.81e-03	1.81e-03
Fe-55	7.26e-04	3.61e-04	3.61e-04	3.61e-04	3.61e-04	3.61e-04	3.61e-04
Fe-59	4.00e-03	3.30e-03	3.30e-03	3.30e-03	3.30e-03	3.30e-03	3.30e-03
Co-56	1.07e-02	1.07e-02	1.07e-02	1.07e-02	1.07e-02	1.07e-02	1.07e-02
Co-57	2.45e-03	2.45e-03	2.45e-03	2.45e-03	2.45e-03	2.45e-03	2.45e-03
Co-58	2.94e-03	2.94e-03	2.94e-03	2.94e-03	2.94e-03	2.94e-03	2.94e-03
Co-60	5.91e-02	5.91e-02	5.91e-02	5.91e-02	5.91e-02	5.91e-02	5.91e-02
Ni-59	3.58e-04	3.58e-04	3.58e-04	3.58e-04	2.48e-04	2.48e-04	3.58e-04
Ni-63	8.39e-04	8.39e-04	8.39e-04	8.39e-04	6.22e-04	6.22e-04	8.39e-04
Zn-65	5.51e-03	5.51e-03	5.51e-03	5.51e-03	5.51e-03	5.51e-03	5.51e-03
As-73	9.34e-04	9.34e-04	9.34e-04	9.34e-04	9.34e-04	9.34e-04	9.34e-04
Se-75	2.29e-03	2.29e-03	2.29e-03	2.29e-03	2.29e-03	2.29e-03	1.95e-03
Sr-85	5.18e-04	1.36e-03	5.18e-04	5.18e-04	5.18e-04	5.18e-04	5.18e-04
Sr-89	1.76e-03	1.12e-02	1.76e-03	1.76e-03	1.76e-03	1.76e-03	1.76e-03
Sr-90	6.70e-02	3.53e-01	6.70e-02	6.70e-02	6.70e-02	6.70e-02	6.68e-02
Y-91	1.32e-02	1.32e-02	1.32e-02	1.32e-02	1.32e-02	1.32e-02	8.72e-03
Zr-93	2.25e-02	8.67e-02	2.25e-02	2.25e-02	2.25e-02	2.25e-02	2.25e-02
Zr-95	4.30e-03	6.40e-03	4.30e-03	4.30e-03	4.30e-03	4.30e-03	4.30e-03
Nb-93m	7.90e-03	7.90e-03	7.90e-03	7.90e-03	7.90e-03	7.90e-03	7.90e-03
Nb-94	1.12e-01	1.12e-01	1.12e-01	1.12e-01	1.12e-01	1.12e-01	1.12e-01
Nb-95	1.57e-03	1.57e-03	1.57e-03	1.57e-03	1.57e-03	1.57e-03	1.57e-03
Mo-93	7.68e-03	7.68e-03	7.68e-03	7.68e-03	7.68e-03	7.68e-03	7.68e-03
Tc-97	2.68e-04	2.68e-04	2.68e-04	2.68e-04	2.68e-04	2.68e-04	2.68e-04
Tc-97m	1.32e-03	1.32e-03	1.32e-03	1.32e-03	1.32e-03	1.32e-03	1.32e-03
Tc-99	2.25e-03	2.25e-03	2.25e-03	2.25e-03	2.25e-03	2.25e-03	2.25e-03
Ru-103	2.42e-03	2.42e-03	2.42e-03	2.42e-03	2.42e-03	2.42e-03	2.42e-03
Ru-106	1.29e-01	1.29e-01	1.29e-01	1.29e-01	1.29e-01	1.29e-01	1.29e-01
Ag-108m	7.66e-02	8.14e-03	8.14e-03	8.14e-03	8.14e-03	7.66e-02	7.66e-02
Ag-110m	2.17e-02	1.07e-02	1.07e-02	1.07e-02	1.07e-02	2.17e-02	2.17e-02
Cd-109	3.09e-02	3.09e-02	1.22e-02	1.22e-02	1.22e-02	1.22e-02	1.07e-02
Sn-113	2.89e-03	2.89e-03	2.89e-03	2.89e-03	2.89e-03	2.89e-03	2.89e-03
Sb-124	6.80e-03	6.80e-03	6.80e-03	6.80e-03	6.80e-03	6.80e-03	6.80e-03
Sb-125	3.75e-03	3.75e-03	3.75e-03	3.75e-03	3.75e-03	3.75e-03	3.75e-03
Te-123m	2.86e-03	2.86e-03	2.86e-03	2.86e-03	2.86e-03	2.86e-03	2.86e-03
Te-127m	5.89e-03	5.89e-03	5.89e-03	5.89e-03	5.89e-03	5.89e-03	5.89e-03
I-125	6.53e-03	6.53e-03	6.53e-03	6.53e-03	6.53e-03	6.53e-03	6.53e-03
I-129	4.69e-02	4.69e-02	4.69e-02	4.69e-02	4.69e-02	4.69e-02	4.69e-02
I-131	8.89e-03	8.89e-03	8.89e-03	8.89e-03	8.89e-03	8.89e-03	8.89e-03
Cs-134	1.25e-02	1.25e-02	1.25e-02	1.25e-02	1.25e-02	1.25e-02	1.25e-02
Cs-135	1.23e-03	1.23e-03	1.23e-03	1.23e-03	1.23e-03	1.23e-03	1.23e-03
Cs-137	8.63e-03	8.63e-03	8.63e-03	8.63e-03	8.63e-03	8.63e-03	8.63e-03
Ba-133	2.11e-03	2.11e-03	2.11e-03	2.11e-03	2.11e-03	2.11e-03	2.11e-03
Ce-139	2.45e-03	2.45e-03	2.45e-03	2.45e-03	2.45e-03	2.45e-03	2.45e-03
Ce-141	2.42e-03	2.42e-03	2.42e-03	2.42e-03	2.42e-03	2.42e-03	2.42e-03
Ce-144	1.01e-01	1.01e-01	1.01e-01	1.01e-01	1.01e-01	1.01e-01	1.01e-01
Pm-147	1.06e-02	1.06e-02	1.06e-02	1.06e-02	1.06e-02	1.06e-02	6.97e-03

Table B.16 Dose conversion factors for inhalation—effective dose equivalent (:Sv/Bq)

Nuclide	Scrap/ concrete	Metal product			Slag/dross/dust/airborne		
		Iron/steel	Copper	Aluminum	Iron/steel	Copper	Aluminum
Sm-151	8.10e-03	8.10e-03	8.10e-03	8.10e-03	8.10e-03	8.10e-03	8.10e-03
Eu-152	5.97e-02	5.97e-02	5.97e-02	5.97e-02	5.97e-02	5.97e-02	5.97e-02
Eu-154	7.73e-02	7.73e-02	7.73e-02	7.73e-02	7.73e-02	7.73e-02	7.73e-02
Eu-155	1.12e-02	1.12e-02	1.12e-02	1.12e-02	1.12e-02	1.12e-02	1.12e-02
Gd-153	2.56e-03	6.43e-03	2.56e-03	6.43e-03	2.56e-03	2.56e-03	6.43e-03
Tb-160	6.75e-03	6.75e-03	6.75e-03	6.75e-03	6.75e-03	6.75e-03	6.75e-03
Tm-170	7.11e-03	7.11e-03	7.11e-03	7.11e-03	7.11e-03	7.11e-03	7.11e-03
Tm-171	2.47e-03	2.47e-03	2.47e-03	2.47e-03	2.47e-03	2.47e-03	2.47e-03
Ta-182	1.21e-02	1.21e-02	1.21e-02	1.21e-02	1.21e-02	1.21e-02	1.21e-02
W-181	4.09e-05	4.09e-05	4.09e-05	4.09e-05	4.09e-05	4.09e-05	4.09e-05
W-185	2.03e-04	2.03e-04	2.03e-04	2.03e-04	2.03e-04	2.03e-04	2.03e-04
Os-185	2.68e-03	2.68e-03	2.68e-03	2.68e-03	2.68e-03	2.68e-03	2.68e-03
Ir-192	7.61e-03	4.88e-03	4.88e-03	4.88e-03	7.61e-03	7.61e-03	7.61e-03
Tl-204	6.50e-04	6.50e-04	6.50e-04	6.50e-04	6.50e-04	6.50e-04	6.50e-04
Pb-210	6.04e+00	6.04e+00	6.04e+00	6.04e+00	6.04e+00	6.04e+00	6.04e+00
Bi-207	5.41e-03	5.41e-03	5.41e-03	5.41e-03	5.41e-03	5.41e-03	5.41e-03
Po-210	2.32e+00	2.32e+00	2.32e+00	2.32e+00	2.32e+00	2.32e+00	2.32e+00
Ra-226	2.32e+00	2.32e+00	2.32e+00	2.32e+00	2.32e+00	2.32e+00	2.32e+00
Ra-228	1.32e+00	1.37e+00	1.32e+00	1.32e+00	1.32e+00	1.32e+00	1.31e+00
Ac-227	3.55e+02	1.82e+03	3.55e+02	3.55e+02	3.55e+02	3.55e+02	4.71e+02
Th-228	6.84e+01	9.32e+01	9.32e+01	9.32e+01	9.32e+01	9.32e+01	6.84e+01
Th-229	5.84e+02	5.85e+02	4.71e+02	4.71e+02	4.71e+02	4.71e+02	5.84e+02
Th-230	8.80e+01	8.80e+01	7.07e+01	7.07e+01	7.07e+01	7.07e+01	8.80e+01
Th-232	4.43e+02	4.43e+02	3.11e+02	3.11e+02	3.11e+02	3.11e+02	4.43e+02
Pa-231	3.47e+02	3.47e+02	2.32e+02	2.32e+02	2.32e+02	2.32e+02	3.47e+02
U-232	1.78e+02	1.78e+02	1.78e+02	1.78e+02	1.78e+02	1.78e+02	1.78e+02
U-233	3.66e+01	3.66e+01	3.66e+01	3.66e+01	3.66e+01	3.66e+01	3.66e+01
U-234	3.58e+01	3.58e+01	3.58e+01	3.58e+01	3.58e+01	3.58e+01	3.58e+01
U-235	3.32e+01	3.32e+01	3.32e+01	3.32e+01	3.32e+01	3.32e+01	3.32e+01
U-236	3.39e+01	3.39e+01	3.39e+01	3.39e+01	3.39e+01	3.39e+01	3.39e+01
U-238	3.20e+01	3.20e+01	3.20e+01	3.20e+01	3.20e+01	3.20e+01	3.20e+01
Np-237	1.46e+02	1.46e+02	1.46e+02	1.46e+02	1.46e+02	1.46e+02	1.46e+02
Pu-236	3.91e+01	3.91e+01	3.50e+01	3.50e+01	3.50e+01	3.50e+01	3.91e+01
Pu-238	1.06e+02	1.06e+02	7.79e+01	7.79e+01	7.79e+01	7.79e+01	1.06e+02
Pu-239	1.16e+02	1.16e+02	8.33e+01	8.33e+01	8.33e+01	8.33e+01	1.16e+02
Pu-240	1.16e+02	1.16e+02	8.33e+01	8.33e+01	8.33e+01	8.33e+01	1.16e+02
Pu-241	2.23e+00	2.23e+00	1.34e+00	1.34e+00	1.34e+00	1.34e+00	2.23e+00
Pu-242	1.11e+02	1.11e+02	7.92e+01	7.92e+01	7.92e+01	7.92e+01	1.11e+02
Pu-244	1.09e+02	1.09e+02	7.82e+01	7.82e+01	7.82e+01	7.82e+01	1.09e+02
Am-241	1.20e+02	1.20e+02	1.20e+02	1.20e+02	1.20e+02	1.20e+02	1.20e+02
Am-242m	1.19e+02	1.19e+02	1.19e+02	1.19e+02	1.19e+02	1.19e+02	1.19e+02
Am-243	1.19e+02	1.19e+02	1.19e+02	1.19e+02	1.19e+02	1.19e+02	1.19e+02
Cm-242	4.67e+00	4.67e+00	4.67e+00	4.67e+00	4.67e+00	4.67e+00	4.67e+00
Cm-243	8.30e+01	8.30e+01	8.30e+01	8.30e+01	8.30e+01	8.30e+01	8.30e+01
Cm-244	6.70e+01	6.70e+01	6.70e+01	6.70e+01	6.70e+01	6.70e+01	6.70e+01
Cm-245	1.23e+02	1.23e+02	1.23e+02	1.23e+02	1.23e+02	1.23e+02	1.23e+02
Cm-246	1.22e+02	1.22e+02	1.22e+02	1.22e+02	1.22e+02	1.22e+02	1.22e+02
Cm-247	1.12e+02	1.12e+02	1.12e+02	1.12e+02	1.12e+02	1.12e+02	1.12e+02
Cm-248	4.47e+02	4.47e+02	4.47e+02	4.47e+02	4.47e+02	4.47e+02	4.47e+02
Bk-249	3.75e-01	3.75e-01	3.75e-01	3.75e-01	3.75e-01	3.75e-01	3.75e-01
Cf-248	1.37e+01	1.37e+01	1.37e+01	1.37e+01	1.37e+01	1.37e+01	1.20e+01
Cf-249	1.03e+02	1.56e+02	1.03e+02	1.03e+02	1.03e+02	1.03e+02	1.56e+02
Cf-250	5.57e+01	7.08e+01	5.57e+01	5.57e+01	5.57e+01	5.57e+01	7.08e+01
Cf-251	1.05e+02	1.59e+02	1.05e+02	1.05e+02	1.05e+02	1.05e+02	1.59e+02
Cf-252	4.24e+01	4.24e+01	4.24e+01	4.24e+01	4.24e+01	4.24e+01	3.70e+01
Cf-254	7.93e+01	7.93e+01	7.93e+01	7.93e+01	7.93e+01	7.93e+01	6.85e+01
Es-254	1.11e+01	1.11e+01	1.11e+01	1.11e+01	1.11e+01	1.11e+01	1.11e+01

Table B.17 Dose coefficients for inhalation—effective dose (:Sv/Bq)

Nuclide	Scrap metal	Concrete	Iron/steel			Copper			Aluminum		
			Metal	Slag/dust	Airborne	Metal	Slag	Dust/air	Metal	Dross	Dust/air
H-3	4.1e-05	4.1e-05	4.1e-05	4.1e-05	1.8e-05	4.1e-05	4.1e-05	4.1e-05	4.1e-05	4.1e-05	1.8e-05
C-14	5.8e-04	5.8e-04	5.8e-04	5.8e-04	6.5e-06	5.8e-04	5.8e-04	5.8e-04	5.8e-04	5.8e-04	5.8e-04
Na-22	1.3e-03	2.0e-03	1.3e-03	2.0e-03	1.3e-03	1.3e-03	2.0e-03	1.3e-03	1.3e-03	2.0e-03	1.3e-03
P-32	3.2e-03	2.9e-03	8.0e-04	1.1e-03	8.0e-04	8.0e-04	1.1e-03	8.0e-04	8.0e-04	1.1e-03	8.0e-04
S-35	1.3e-03	1.1e-03	5.3e-05	1.1e-03	1.3e-03	1.3e-03	1.1e-03	1.3e-03	5.3e-05	1.3e-03	1.3e-03
Cl-36	6.9e-03	5.1e-03	6.9e-03	5.1e-03	6.9e-03	6.9e-03	5.1e-03	6.9e-03	6.9e-03	5.1e-03	6.9e-03
K-40	2.1e-03	3.0e-03	2.1e-03	3.0e-03	2.1e-03	2.1e-03	3.0e-03	2.1e-03	2.1e-03	3.0e-03	2.1e-03
Ca-41	1.7e-04	1.9e-04	1.7e-04	1.9e-04	1.7e-04	1.7e-04	1.9e-04	1.7e-04	1.7e-04	1.9e-04	1.7e-04
Ca-45	2.7e-03	2.3e-03	2.7e-03	2.3e-03	2.7e-03	2.7e-03	2.3e-03	2.7e-03	2.7e-03	2.3e-03	2.7e-03
Sc-46	6.4e-03	4.8e-03	6.4e-03	4.8e-03	6.4e-03	6.4e-03	4.8e-03	6.4e-03	6.4e-03	4.8e-03	6.4e-03
Cr-51	3.6e-05	3.6e-05	3.6e-05	3.6e-05	3.6e-05	3.6e-05	3.6e-05	3.6e-05	3.6e-05	3.6e-05	3.6e-05
Mn-53	5.2e-05	3.6e-05	5.2e-05	3.6e-05	5.2e-05	5.2e-05	3.6e-05	5.2e-05	5.2e-05	3.6e-05	5.2e-05
Mn-54	1.5e-03	1.2e-03	1.5e-03	1.2e-03	1.5e-03	1.5e-03	1.2e-03	1.5e-03	1.5e-03	1.2e-03	1.5e-03
Fe-55	7.7e-04	9.2e-04	3.7e-04	3.3e-04	3.7e-04	3.7e-04	3.3e-04	3.7e-04	3.7e-04	3.3e-04	3.7e-04
Fe-59	2.2e-03	3.0e-03	3.5e-03	3.2e-03	3.5e-03	3.5e-03	3.2e-03	3.5e-03	3.5e-03	3.2e-03	3.5e-03
Co-56	6.3e-03	4.9e-03	6.3e-03	4.9e-03	6.3e-03	6.3e-03	4.9e-03	6.3e-03	6.3e-03	4.9e-03	6.3e-03
Co-57	9.4e-04	6.0e-04	9.4e-04	6.0e-04	9.4e-04	9.4e-04	6.0e-04	9.4e-04	9.4e-04	6.0e-04	9.4e-04
Co-58	2.0e-03	1.7e-03	2.0e-03	1.7e-03	2.0e-03	2.0e-03	1.7e-03	2.0e-03	2.0e-03	1.7e-03	2.0e-03
Co-60	2.9e-02	1.7e-02	2.9e-02	1.7e-02	2.9e-02	2.9e-02	1.7e-02	2.9e-02	2.9e-02	1.7e-02	2.9e-02
Ni-59	1.8e-04	2.2e-04	1.8e-04	9.4e-05	1.3e-04	1.8e-04	9.4e-05	1.3e-04	1.8e-04	2.2e-04	1.8e-04
Ni-63	4.4e-04	5.2e-04	4.4e-04	3.1e-04	4.4e-04	4.4e-04	3.1e-04	4.4e-04	4.4e-04	5.2e-04	4.4e-04
Zn-65	2.9e-03	2.8e-03	2.9e-03	2.8e-03	2.9e-03	2.9e-03	2.8e-03	2.9e-03	2.9e-03	2.8e-03	2.9e-03
As-73	9.3e-04	6.5e-04	9.3e-04	6.5e-04	9.3e-04	9.3e-04	6.5e-04	9.3e-04	9.3e-04	6.5e-04	9.3e-04
Se-75	1.4e-03	1.7e-03	1.4e-03	1.7e-03	1.4e-03	1.4e-03	1.7e-03	1.4e-03	1.4e-03	1.4e-03	1.0e-03
Sr-85	3.9e-04	5.6e-04	7.7e-04	5.6e-04	3.9e-04	3.9e-04	5.6e-04	3.9e-04	3.9e-04	5.6e-04	3.9e-04
Sr-89	1.0e-03	1.4e-03	7.5e-03	1.4e-03	1.0e-03	1.0e-03	1.4e-03	1.0e-03	1.0e-03	1.4e-03	1.0e-03
Sr-90	2.6e-02	3.2e-02	1.5e-01	3.2e-02	2.6e-02	2.6e-02	3.2e-02	2.6e-02	2.6e-02	3.1e-02	2.5e-02
Y-91	8.4e-03	6.1e-03	8.4e-03	6.1e-03	8.4e-03	8.4e-03	6.1e-03	8.4e-03	8.4e-03	5.2e-03	6.7e-03
Zr-93	9.6e-03	6.6e-03	2.5e-02	6.6e-03	9.6e-03	9.6e-03	6.6e-03	9.6e-03	9.6e-03	6.6e-03	9.6e-03
Zr-95	4.5e-03	3.6e-03	5.5e-03	3.6e-03	4.5e-03	4.5e-03	3.6e-03	4.5e-03	4.5e-03	3.6e-03	4.5e-03
Nb-93m	1.6e-03	8.6e-04	1.6e-03	8.6e-04	1.6e-03	1.6e-03	8.6e-04	1.6e-03	1.6e-03	8.6e-04	1.6e-03
Nb-94	4.5e-02	2.5e-02	4.5e-02	2.5e-02	4.5e-02	4.5e-02	2.5e-02	4.5e-02	4.5e-02	2.5e-02	4.5e-02
Nb-95	1.6e-03	1.3e-03	1.6e-03	1.3e-03	1.6e-03	1.6e-03	1.3e-03	1.6e-03	1.6e-03	1.3e-03	1.6e-03
Mo-93	2.2e-03	1.2e-03	2.2e-03	1.2e-03	2.2e-03	2.2e-03	1.2e-03	2.2e-03	2.2e-03	1.2e-03	2.2e-03
Tc-97	2.1e-04	1.6e-04	2.1e-04	1.6e-04	2.1e-04	2.1e-04	1.6e-04	2.1e-04	2.1e-04	1.6e-04	2.1e-04
Tc-97m	3.1e-03	2.7e-03	3.1e-03	2.7e-03	3.1e-03	3.1e-03	2.7e-03	3.1e-03	3.1e-03	2.7e-03	3.1e-03
Tc-99	3.9e-03	3.2e-03	3.9e-03	3.2e-03	3.9e-03	3.9e-03	3.2e-03	3.9e-03	3.9e-03	3.2e-03	3.9e-03
Ru-103	2.8e-03	2.2e-03	2.8e-03	2.2e-03	2.8e-03	2.8e-03	2.2e-03	2.8e-03	2.8e-03	2.8e-03	2.8e-03
Ru-106	6.2e-02	3.5e-02	6.2e-02	3.5e-02	6.2e-02	6.2e-02	3.5e-02	6.2e-02	6.2e-02	6.2e-02	6.2e-02
Ag-108m	3.5e-02	1.9e-02	6.1e-03	7.3e-03	6.1e-03	6.1e-03	3.5e-02	3.5e-02	6.1e-03	3.5e-02	3.5e-02
Ag-110m	1.2e-02	7.3e-03	5.5e-03	6.7e-03	5.5e-03	5.5e-03	1.2e-02	1.2e-02	5.5e-03	1.2e-02	1.2e-02
Cd-109	8.1e-03	9.6e-03	8.1e-03	4.4e-03	5.8e-03	5.8e-03	4.4e-03	5.8e-03	5.8e-03	5.1e-03	6.2e-03
Sn-113	2.5e-03	1.9e-03	2.5e-03	1.9e-03	2.5e-03	2.5e-03	1.9e-03	2.5e-03	2.5e-03	1.9e-03	2.5e-03
Sb-124	6.1e-03	4.7e-03	6.1e-03	4.7e-03	6.1e-03	6.1e-03	4.7e-03	6.1e-03	6.1e-03	4.7e-03	6.1e-03
Sb-125	5.3e-03	4.0e-03	5.3e-03	4.0e-03	5.2e-03	5.3e-03	4.1e-03	5.3e-03	5.3e-03	4.1e-03	5.3e-03
Te-123m	3.9e-03	3.4e-03	3.9e-03	3.4e-03	3.9e-03	3.9e-03	3.4e-03	3.9e-03	3.9e-03	3.4e-03	3.9e-03
Te-127m	7.3e-03	6.4e-03	7.3e-03	6.4e-03	7.4e-03	7.3e-03	6.3e-03	7.3e-03	7.3e-03	6.3e-03	7.3e-03
I-125	5.3e-03	7.3e-03	5.3e-03	7.3e-03	5.3e-03	5.3e-03	7.3e-03	5.3e-03	5.3e-03	7.3e-03	5.3e-03
I-129	3.7e-02	5.1e-02	3.7e-02	5.1e-02	3.7e-02	3.7e-02	5.1e-02	3.7e-02	3.7e-02	5.1e-02	3.7e-02
I-131	7.6e-03	1.1e-02	7.6e-03	1.1e-02	7.6e-03	7.6e-03	1.1e-02	7.6e-03	7.6e-03	1.1e-02	7.6e-03
Cs-134	6.8e-03	9.6e-03	6.8e-03	9.6e-03	6.8e-03	6.8e-03	9.6e-03	6.8e-03	6.8e-03	9.6e-03	6.8e-03
Cs-135	7.1e-04	9.9e-04	7.1e-04	9.9e-04	7.1e-04	7.1e-04	9.9e-04	7.1e-04	7.1e-04	9.9e-04	7.1e-04
Cs-137	4.8e-03	6.7e-03	4.8e-03	6.7e-03	4.8e-03	4.8e-03	6.7e-03	4.8e-03	4.8e-03	6.7e-03	4.8e-03
Ba-133	1.5e-03	1.8e-03	1.5e-03	1.8e-03	1.5e-03	1.5e-03	1.8e-03	1.5e-03	1.5e-03	1.8e-03	1.5e-03
Ce-139	1.8e-03	1.4e-03	1.8e-03	1.4e-03	1.8e-03	1.8e-03	1.4e-03	1.8e-03	1.8e-03	1.4e-03	1.8e-03
Ce-141	3.6e-03	3.1e-03	3.6e-03	3.1e-03	3.6e-03	3.6e-03	3.1e-03	3.6e-03	3.6e-03	3.1e-03	3.6e-03
Ce-144	4.9e-02	2.9e-02	4.9e-02	2.9e-02	4.9e-02	4.9e-02	2.9e-02	4.9e-02	4.9e-02	2.9e-02	4.9e-02
Pm-147	4.6e-03	3.2e-03	4.7e-03	3.2e-03	4.6e-03	4.6e-03	3.2e-03	4.6e-03	4.7e-03	3.5e-03	4.7e-03

Table B.17 Dose coefficients for inhalation—effective dose (:Sv/Bq)

Nuclide	Scrap metal	Concrete	Iron/steel			Copper			Aluminum		
			Metal	Slag/dust	Airborne	Metal	Slag	Dust/air	Metal	Dross	Dust/air
Sm-151	3.7e-03	2.6e-03	3.7e-03	2.6e-03	3.7e-03	3.7e-03	2.6e-03	3.7e-03	3.7e-03	2.6e-03	3.7e-03
Eu-152	3.9e-02	2.7e-02	3.9e-02	2.7e-02	3.9e-02	3.9e-02	2.7e-02	3.9e-02	3.9e-02	2.7e-02	3.9e-02
Eu-154	5.0e-02	3.5e-02	5.0e-02	3.5e-02	5.0e-02	5.0e-02	3.5e-02	5.0e-02	5.0e-02	3.5e-02	5.0e-02
Eu-155	6.5e-03	4.7e-03	6.5e-03	4.7e-03	6.5e-03	6.5e-03	4.7e-03	6.5e-03	6.5e-03	4.7e-03	6.5e-03
Gd-153	1.9e-03	1.4e-03	2.1e-03	1.4e-03	1.9e-03	1.9e-03	1.4e-03	1.9e-03	2.1e-03	2.5e-03	2.1e-03
Tb-160	6.6e-03	5.4e-03	6.6e-03	5.4e-03	6.6e-03	6.6e-03	5.4e-03	6.6e-03	6.6e-03	5.4e-03	6.6e-03
Tm-170	6.6e-03	5.2e-03	6.6e-03	5.2e-03	6.6e-03	6.6e-03	5.2e-03	6.6e-03	6.6e-03	5.2e-03	6.6e-03
Tm-171	1.3e-03	9.1e-04	1.3e-03	9.1e-04	1.3e-03	1.3e-03	9.1e-04	1.3e-03	1.3e-03	9.1e-04	1.3e-03
Ta-182	9.7e-03	7.4e-03	9.7e-03	7.4e-03	9.7e-03	9.7e-03	7.4e-03	9.7e-03	9.7e-03	7.4e-03	9.7e-03
W-181	2.8e-05	4.3e-05	2.8e-05	4.3e-05	2.8e-05	2.8e-05	4.3e-05	2.8e-05	2.8e-05	4.3e-05	2.8e-05
W-185	1.4e-04	2.2e-04	1.4e-04	2.2e-04	1.4e-04	1.4e-04	2.2e-04	1.4e-04	1.4e-04	2.2e-04	1.4e-04
Os-185	1.5e-03	1.1e-03	1.5e-03	1.1e-03	1.5e-03	1.5e-03	1.1e-03	1.5e-03	1.5e-03	1.1e-03	1.5e-03
Ir-192	6.2e-03	4.9e-03	4.9e-03	4.9e-03	6.2e-03	4.9e-03	4.9e-03	6.2e-03	4.9e-03	4.9e-03	6.2e-03
Tl-204	4.4e-04	6.2e-04	4.4e-04	6.2e-04	4.4e-04	4.4e-04	6.2e-04	4.4e-04	4.4e-04	6.2e-04	4.4e-04
Pb-210	4.0e+00	3.4e+00	4.0e+00	3.4e+00	3.2e+00	4.0e+00	4.2e+00	4.0e+00	4.0e+00	4.2e+00	4.0e+00
Bi-207	5.2e-03	3.2e-03	5.2e-03	3.2e-03	5.2e-03	5.2e-03	3.2e-03	5.2e-03	5.2e-03	3.2e-03	5.2e-03
Po-210	3.0e+00	2.2e+00	3.0e+00	2.2e+00	3.0e+00	3.0e+00	2.2e+00	3.0e+00	3.0e+00	2.2e+00	3.0e+00
Ra-226	3.2e+00	2.2e+00	3.2e+00	2.2e+00	3.2e+00	3.2e+00	2.2e+00	3.2e+00	3.2e+00	2.2e+00	3.2e+00
Ra-228	2.6e+00	1.7e+00	2.6e+00	1.7e+00	2.6e+00	2.6e+00	1.7e+00	2.6e+00	2.6e+00	1.7e+00	2.6e+00
Ac-227	8.1e+01	5.9e+01	5.6e+02	6.0e+01	7.9e+01	8.2e+01	6.3e+01	8.2e+01	8.2e+01	1.7e+02	2.3e+02
Th-228	3.4e+01	2.6e+01	4.2e+01	3.5e+01	4.2e+01	4.2e+01	3.5e+01	4.2e+01	4.2e+01	2.6e+01	3.4e+01
Th-229	1.1e+02	8.0e+01	1.1e+02	5.9e+01	7.6e+01	7.9e+01	6.2e+01	7.9e+01	7.9e+01	8.2e+01	1.1e+02
Th-230	4.0e+01	2.8e+01	4.0e+01	7.2e+00	1.3e+01	1.3e+01	7.2e+00	1.3e+01	1.3e+01	2.8e+01	4.0e+01
Th-232	4.2e+01	2.9e+01	4.2e+01	1.2e+01	2.3e+01	2.3e+01	1.2e+01	2.3e+01	2.3e+01	2.9e+01	4.2e+01
Pa-231	1.3e+02	8.9e+01	1.3e+02	1.7e+01	3.2e+01	3.2e+01	1.7e+01	3.2e+01	3.2e+01	8.9e+01	1.3e+02
U-232	3.5e+01	2.6e+01	3.5e+01	2.6e+01	3.5e+01	3.5e+01	2.6e+01	3.5e+01	3.5e+01	2.6e+01	3.5e+01
U-233	8.7e+00	6.9e+00	8.7e+00	6.9e+00	8.7e+00	8.7e+00	6.9e+00	8.7e+00	8.7e+00	6.9e+00	8.7e+00
U-234	8.5e+00	6.8e+00	8.5e+00	6.8e+00	8.5e+00	8.5e+00	6.8e+00	8.5e+00	8.5e+00	6.8e+00	8.5e+00
U-235	7.7e+00	6.1e+00	7.7e+00	6.1e+00	7.7e+00	7.7e+00	6.1e+00	7.7e+00	7.7e+00	6.1e+00	7.7e+00
U-236	7.9e+00	6.3e+00	7.9e+00	6.3e+00	7.9e+00	7.9e+00	6.3e+00	7.9e+00	7.9e+00	6.3e+00	7.9e+00
U-238	7.3e+00	5.7e+00	7.3e+00	5.7e+00	7.3e+00	7.3e+00	5.7e+00	7.3e+00	7.3e+00	5.7e+00	7.3e+00
Np-237	2.1e+01	1.5e+01	2.1e+01	1.5e+01	2.1e+01	2.1e+01	1.5e+01	2.1e+01	2.1e+01	1.5e+01	2.1e+01
Pu-236	1.8e+01	1.3e+01	1.8e+01	7.4e+00	9.6e+00	9.6e+00	7.4e+00	9.6e+00	9.6e+00	1.3e+01	1.8e+01
Pu-238	4.3e+01	3.0e+01	4.3e+01	1.1e+01	1.5e+01	1.5e+01	1.1e+01	1.5e+01	1.5e+01	3.0e+01	4.3e+01
Pu-239	4.7e+01	3.2e+01	4.7e+01	8.3e+00	1.5e+01	1.5e+01	8.3e+00	1.5e+01	1.5e+01	3.2e+01	4.7e+01
Pu-240	4.7e+01	3.2e+01	4.7e+01	8.3e+00	1.5e+01	1.5e+01	8.3e+00	1.5e+01	1.5e+01	3.2e+01	4.7e+01
Pu-241	8.5e-01	5.8e-01	8.5e-01	8.4e-02	1.6e-01	1.6e-01	8.4e-02	1.6e-01	1.6e-01	5.8e-01	8.5e-01
Pu-242	4.4e+01	3.1e+01	4.4e+01	7.7e+00	1.4e+01	1.4e+01	7.7e+00	1.4e+01	1.4e+01	3.1e+01	4.4e+01
Pu-244	4.4e+01	3.0e+01	4.4e+01	7.4e+00	1.3e+01	1.3e+01	7.4e+00	1.3e+01	1.3e+01	3.0e+01	4.4e+01
Am-241	3.9e+01	2.7e+01	3.9e+01	2.7e+01	3.9e+01	3.9e+01	2.7e+01	3.9e+01	3.9e+01	2.7e+01	3.9e+01
Am-242m	3.9e+01	2.7e+01	3.9e+01	2.7e+01	3.8e+01	3.9e+01	2.8e+01	3.9e+01	3.9e+01	2.8e+01	3.9e+01
Am-243	3.9e+01	2.7e+01	3.9e+01	2.7e+01	3.9e+01	3.9e+01	2.7e+01	3.9e+01	3.9e+01	2.7e+01	3.9e+01
Cm-242	4.8e+00	3.7e+00	4.8e+00	3.7e+00	4.8e+00	4.8e+00	3.7e+00	4.8e+00	4.8e+00	3.7e+00	4.8e+00
Cm-243	2.9e+01	2.0e+01	2.9e+01	2.0e+01	2.9e+01	2.9e+01	2.0e+01	2.9e+01	2.9e+01	2.0e+01	2.9e+01
Cm-244	2.5e+01	1.7e+01	2.5e+01	1.7e+01	2.5e+01	2.5e+01	1.7e+01	2.5e+01	2.5e+01	1.7e+01	2.5e+01
Cm-245	4.0e+01	2.7e+01	4.0e+01	2.7e+01	4.0e+01	4.0e+01	2.7e+01	4.0e+01	4.0e+01	2.7e+01	4.0e+01
Cm-246	4.0e+01	2.7e+01	4.0e+01	2.7e+01	4.0e+01	4.0e+01	2.7e+01	4.0e+01	4.0e+01	2.7e+01	4.0e+01
Cm-247	3.6e+01	2.5e+01	3.6e+01	2.5e+01	3.6e+01	3.6e+01	2.5e+01	3.6e+01	3.6e+01	2.5e+01	3.6e+01
Cm-248	1.4e+02	9.5e+01	1.4e+02	9.5e+01	1.4e+02	1.4e+02	9.5e+01	1.4e+02	1.4e+02	9.5e+01	1.4e+02
Bk-249	1.5e-01	1.0e-01	1.5e-01	1.0e-01	1.5e-01	1.5e-01	1.0e-01	1.5e-01	1.5e-01	1.0e-01	1.5e-01
Cf-248	8.2e+00	6.1e+00	8.2e+00	6.1e+00	8.2e+00	8.2e+00	6.1e+00	8.2e+00	8.2e+00	6.1e+00	8.2e+00
Cf-249	6.6e+01	4.5e+01	6.6e+01	4.5e+01	6.6e+01	6.6e+01	4.5e+01	6.6e+01	6.6e+01	4.5e+01	6.6e+01
Cf-250	3.2e+01	2.2e+01	3.2e+01	2.2e+01	3.2e+01	3.2e+01	2.2e+01	3.2e+01	3.2e+01	2.2e+01	3.2e+01
Cf-251	6.7e+01	4.6e+01	6.7e+01	4.6e+01	6.7e+01	6.7e+01	4.6e+01	6.7e+01	6.7e+01	4.6e+01	6.7e+01
Cf-252	1.8e+01	1.3e+01	1.8e+01	1.3e+01	1.8e+01	1.8e+01	1.3e+01	1.8e+01	1.8e+01	1.3e+01	1.8e+01
Cf-254	3.7e+01	2.2e+01	3.7e+01	2.2e+01	3.7e+01	3.7e+01	2.2e+01	3.7e+01	3.7e+01	2.2e+01	3.7e+01
Es-254	8.0e+00	6.0e+00	8.0e+00	6.0e+00	8.0e+00	8.0e+00	6.0e+00	8.0e+00	8.0e+00	6.0e+00	8.0e+00

Table B.18 Dose conversion factors for ingestion—effective dose equivalent (:Sv/Bq)

Nuclide	Scrap/ concrete	Food/ water	Metal product			Dust/slag/dross		
			Iron/steel	Copper	Aluminum	Iron/steel	Copper	Aluminum
H-3	1.73e-05	1.73e-05	1.73e-05	1.73e-05	1.73e-05	1.73e-05	1.73e-05	1.73e-05
C-14	5.64e-04	5.64e-04	5.64e-04	5.64e-04	5.64e-04	5.64e-04	5.64e-04	5.64e-04
Na-22	3.10e-03	3.10e-03	3.10e-03	3.10e-03	3.10e-03	3.10e-03	3.10e-03	3.10e-03
P-32	2.37e-03	2.37e-03	2.37e-03	2.37e-03	2.37e-03	2.37e-03	2.37e-03	2.37e-03
S-35	1.21e-04	1.21e-04	1.21e-04	1.21e-04	1.21e-04	1.21e-04	1.21e-04	1.21e-04
Cl-36	8.18e-04	8.18e-04	8.18e-04	8.18e-04	8.18e-04	8.18e-04	8.18e-04	8.18e-04
K-40	5.02e-03	5.02e-03	5.02e-03	5.02e-03	5.02e-03	5.02e-03	5.02e-03	5.02e-03
Ca-41	3.44e-04	3.44e-04	3.44e-04	3.44e-04	3.44e-04	3.44e-04	3.44e-04	3.44e-04
Ca-45	8.55e-04	8.55e-04	8.55e-04	8.55e-04	8.55e-04	8.55e-04	8.55e-04	8.55e-04
Sc-46	1.73e-03	1.73e-03	1.73e-03	1.73e-03	1.73e-03	1.73e-03	1.73e-03	1.73e-03
Cr-51	3.93e-05	3.98e-05	3.93e-05	3.93e-05	3.93e-05	3.98e-05	3.98e-05	3.98e-05
Mn-53	2.92e-05	2.92e-05	2.92e-05	2.92e-05	2.92e-05	2.92e-05	2.92e-05	2.92e-05
Mn-54	7.48e-04	7.48e-04	7.48e-04	7.48e-04	7.48e-04	7.48e-04	7.48e-04	7.48e-04
Fe-55	1.64e-04	1.64e-04	1.64e-04	1.64e-04	1.64e-04	1.64e-04	1.64e-04	1.64e-04
Fe-59	1.81e-03	1.81e-03	1.81e-03	1.81e-03	1.81e-03	1.81e-03	1.81e-03	1.81e-03
Co-56	2.73e-03	2.73e-03	2.73e-03	2.73e-03	2.73e-03	2.73e-03	2.73e-03	2.73e-03
Co-57	2.01e-04	2.01e-04	2.01e-04	2.01e-04	2.01e-04	2.01e-04	2.01e-04	2.01e-04
Co-58	8.09e-04	8.09e-04	8.09e-04	8.09e-04	8.09e-04	8.09e-04	8.09e-04	8.09e-04
Co-60	2.77e-03	2.77e-03	2.77e-03	2.77e-03	2.77e-03	2.77e-03	2.77e-03	2.77e-03
Ni-59	5.67e-05	5.67e-05	5.67e-05	5.67e-05	5.67e-05	5.67e-05	5.67e-05	5.67e-05
Ni-63	1.56e-04	1.56e-04	1.56e-04	1.56e-04	1.56e-04	1.56e-04	1.56e-04	1.56e-04
Zn-65	3.90e-03	3.90e-03	3.90e-03	3.90e-03	3.90e-03	3.90e-03	3.90e-03	3.90e-03
As-73	1.91e-04	1.91e-04	1.91e-04	1.91e-04	1.91e-04	1.91e-04	1.91e-04	1.91e-04
Se-75	2.60e-03	2.60e-03	2.60e-03	2.60e-03	2.60e-03	2.60e-03	2.60e-03	2.60e-03
Sr-85	5.34e-04	5.34e-04	5.34e-04	5.34e-04	5.34e-04	5.34e-04	5.34e-04	5.34e-04
Sr-89	2.50e-03	2.50e-03	2.50e-03	2.50e-03	2.50e-03	2.50e-03	2.50e-03	2.50e-03
Sr-90	4.14e-02	4.14e-02	4.14e-02	4.14e-02	4.14e-02	4.14e-02	4.14e-02	4.14e-02
Y-91	2.57e-03	2.57e-03	2.57e-03	2.57e-03	2.57e-03	2.57e-03	2.57e-03	2.57e-03
Zr-93	4.48e-04	4.48e-04	4.48e-04	4.48e-04	4.48e-04	4.48e-04	4.48e-04	4.48e-04
Zr-95	1.03e-03	1.03e-03	1.03e-03	1.03e-03	1.03e-03	1.03e-03	1.03e-03	1.03e-03
Nb-93m	1.41e-04	1.41e-04	1.41e-04	1.41e-04	1.41e-04	1.41e-04	1.41e-04	1.41e-04
Nb-94	1.93e-03	1.93e-03	1.93e-03	1.93e-03	1.93e-03	1.93e-03	1.93e-03	1.93e-03
Nb-95	6.95e-04	6.95e-04	6.95e-04	6.95e-04	6.95e-04	6.95e-04	6.95e-04	6.95e-04
Mo-93	3.64e-04	3.64e-04	3.64e-04	3.64e-04	3.64e-04	3.64e-04	3.64e-04	3.64e-04
Tc-97	4.63e-05	4.63e-05	4.63e-05	4.63e-05	4.63e-05	4.63e-05	4.63e-05	4.63e-05
Tc-97m	3.36e-04	3.36e-04	3.36e-04	3.36e-04	3.36e-04	3.36e-04	3.36e-04	3.36e-04
Tc-99	3.95e-04	3.95e-04	3.95e-04	3.95e-04	3.95e-04	3.95e-04	3.95e-04	3.95e-04
Ru-103	8.27e-04	8.27e-04	8.27e-04	8.27e-04	8.27e-04	8.27e-04	8.27e-04	8.27e-04
Ru-106	7.40e-03	7.40e-03	7.40e-03	7.40e-03	7.40e-03	7.40e-03	7.40e-03	7.40e-03
Ag-108m	2.06e-03	2.06e-03	2.06e-03	2.06e-03	2.06e-03	2.06e-03	2.06e-03	2.06e-03
Ag-110m	2.92e-03	2.92e-03	2.92e-03	2.92e-03	2.92e-03	2.92e-03	2.92e-03	2.92e-03
Cd-109	3.55e-03	3.55e-03	3.55e-03	3.55e-03	3.55e-03	3.55e-03	3.55e-03	3.55e-03
Sn-113	8.61e-04	8.61e-04	8.61e-04	8.61e-04	8.61e-04	8.61e-04	8.61e-04	8.61e-04
Sb-124	2.74e-03	2.74e-03	2.74e-03	2.74e-03	2.74e-03	2.74e-03	2.74e-03	2.74e-03
Sb-125	9.83e-04	9.83e-04	9.83e-04	9.83e-04	9.83e-04	9.83e-04	9.83e-04	9.83e-04
Te-123m	1.53e-03	1.53e-03	1.53e-03	1.53e-03	1.53e-03	1.53e-03	1.53e-03	1.53e-03
Te-127m	2.41e-03	2.41e-03	2.41e-03	2.41e-03	2.41e-03	2.41e-03	2.41e-03	2.41e-03
I-125	1.04e-02	1.04e-02	1.04e-02	1.04e-02	1.04e-02	1.04e-02	1.04e-02	1.04e-02
I-129	7.46e-02	7.46e-02	7.46e-02	7.46e-02	7.46e-02	7.46e-02	7.46e-02	7.46e-02
I-131	1.44e-02	1.44e-02	1.44e-02	1.44e-02	1.44e-02	1.44e-02	1.44e-02	1.44e-02
Cs-134	1.98e-02	1.98e-02	1.98e-02	1.98e-02	1.98e-02	1.98e-02	1.98e-02	1.98e-02
Cs-135	1.91e-03	1.91e-03	1.91e-03	1.91e-03	1.91e-03	1.91e-03	1.91e-03	1.91e-03
Cs-137	1.35e-02	1.35e-02	1.35e-02	1.35e-02	1.35e-02	1.35e-02	1.35e-02	1.35e-02
Ba-133	9.19e-04	9.19e-04	9.19e-04	9.19e-04	9.19e-04	9.19e-04	9.19e-04	9.19e-04
Ce-139	3.09e-04	3.09e-04	3.09e-04	3.09e-04	3.09e-04	3.09e-04	3.09e-04	3.09e-04
Ce-141	7.83e-04	7.83e-04	7.83e-04	7.83e-04	7.83e-04	7.83e-04	7.83e-04	7.83e-04
Ce-144	5.71e-03	5.71e-03	5.71e-03	5.71e-03	5.71e-03	5.71e-03	5.71e-03	5.71e-03
Pm-147	2.83e-04	2.83e-04	2.83e-04	2.83e-04	2.83e-04	2.83e-04	2.83e-04	2.83e-04

Table B.18 Dose conversion factors for ingestion—effective dose equivalent (:Sv/Bq)

Nuclide	Scrap/ concrete	Food/ water	Metal product			Dust/slag/dross		
			Iron/steel	Copper	Aluminum	Iron/steel	Copper	Aluminum
Sm-151	1.05e-04	1.05e-04	1.05e-04	1.05e-04	1.05e-04	1.05e-04	1.05e-04	1.05e-04
Eu-152	1.75e-03	1.75e-03	1.75e-03	1.75e-03	1.75e-03	1.75e-03	1.75e-03	1.75e-03
Eu-154	2.58e-03	2.58e-03	2.58e-03	2.58e-03	2.58e-03	2.58e-03	2.58e-03	2.58e-03
Eu-155	4.13e-04	4.13e-04	4.13e-04	4.13e-04	4.13e-04	4.13e-04	4.13e-04	4.13e-04
Gd-153	3.17e-04	3.17e-04	3.17e-04	3.17e-04	3.17e-04	3.17e-04	3.17e-04	3.17e-04
Tb-160	1.82e-03	1.82e-03	1.82e-03	1.82e-03	1.82e-03	1.82e-03	1.82e-03	1.82e-03
Tm-170	1.43e-03	1.43e-03	1.43e-03	1.43e-03	1.43e-03	1.43e-03	1.43e-03	1.43e-03
Tm-171	1.16e-04	1.16e-04	1.16e-04	1.16e-04	1.16e-04	1.16e-04	1.16e-04	1.16e-04
Ta-182	1.76e-03	1.76e-03	1.76e-03	1.76e-03	1.76e-03	1.76e-03	1.76e-03	1.76e-03
W-181	7.74e-05	7.74e-05	7.74e-05	7.74e-05	7.74e-05	7.74e-05	7.74e-05	7.74e-05
W-185	4.28e-04	4.28e-04	4.28e-04	4.28e-04	4.28e-04	4.28e-04	4.28e-04	4.28e-04
Os-185	6.11e-04	6.11e-04	6.11e-04	6.11e-04	6.11e-04	6.11e-04	6.11e-04	6.11e-04
Ir-192	1.55e-03	1.55e-03	1.55e-03	1.55e-03	1.55e-03	1.55e-03	1.55e-03	1.55e-03
Tl-204	9.08e-04	9.08e-04	9.08e-04	9.08e-04	9.08e-04	9.08e-04	9.08e-04	9.08e-04
Pb-210	1.97e+00	1.97e+00	1.97e+00	1.97e+00	1.97e+00	1.97e+00	1.97e+00	1.97e+00
Bi-207	1.48e-03	1.48e-03	1.48e-03	1.48e-03	1.48e-03	1.48e-03	1.48e-03	1.48e-03
Po-210	5.14e-01	5.14e-01	5.14e-01	5.14e-01	5.14e-01	5.14e-01	5.14e-01	5.14e-01
Ra-226	3.58e-01	3.58e-01	3.58e-01	3.58e-01	3.58e-01	3.58e-01	3.58e-01	3.58e-01
Ra-228	3.89e-01	3.89e-01	3.89e-01	3.89e-01	3.89e-01	3.89e-01	3.89e-01	3.89e-01
Ac-227	3.99e+00	3.99e+00	3.99e+00	3.99e+00	3.99e+00	3.99e+00	3.99e+00	3.99e+00
Th-228	2.18e-01	2.18e-01	2.18e-01	2.18e-01	2.18e-01	2.18e-01	2.18e-01	2.18e-01
Th-229	1.09e+00	1.09e+00	1.09e+00	1.09e+00	1.09e+00	1.09e+00	1.09e+00	1.09e+00
Th-230	1.48e-01	1.48e-01	1.48e-01	1.48e-01	1.48e-01	1.48e-01	1.48e-01	1.48e-01
Th-232	7.38e-01	7.38e-01	7.38e-01	7.38e-01	7.38e-01	7.38e-01	7.38e-01	7.38e-01
Pa-231	2.86e+00	2.86e+00	2.86e+00	2.86e+00	2.86e+00	2.86e+00	2.86e+00	2.86e+00
U-232	3.54e-01	3.54e-01	3.54e-01	3.54e-01	3.54e-01	1.87e-02	1.87e-02	3.54e-01
U-233	7.81e-02	7.81e-02	7.81e-02	7.81e-02	7.81e-02	7.15e-03	7.15e-03	7.81e-02
U-234	7.66e-02	7.66e-02	7.66e-02	7.66e-02	7.66e-02	7.06e-03	7.06e-03	7.66e-02
U-235	7.23e-02	7.23e-02	7.23e-02	7.23e-02	7.23e-02	7.59e-03	7.59e-03	7.23e-02
U-236	7.26e-02	7.26e-02	7.26e-02	7.26e-02	7.26e-02	6.68e-03	6.68e-03	7.26e-02
U-238	7.25e-02	7.25e-02	7.25e-02	7.25e-02	7.25e-02	1.01e-02	1.01e-02	7.25e-02
Np-237	1.20e+00	1.20e+00	1.20e+00	1.20e+00	1.20e+00	1.20e+00	1.20e+00	1.20e+00
Pu-236	3.15e-01	3.15e-01	3.15e-01	3.15e-01	3.15e-01	3.15e-01	3.15e-01	3.15e-01
Pu-238	8.65e-01	8.65e-01	8.65e-01	8.65e-01	8.65e-01	8.65e-01	8.65e-01	8.65e-01
Pu-239	9.56e-01	9.56e-01	9.56e-01	9.56e-01	9.56e-01	9.56e-01	9.56e-01	9.56e-01
Pu-240	9.56e-01	9.56e-01	9.56e-01	9.56e-01	9.56e-01	9.56e-01	9.56e-01	9.56e-01
Pu-241	1.85e-02	1.85e-02	1.85e-02	1.85e-02	1.85e-02	1.85e-02	1.85e-02	1.85e-02
Pu-242	9.08e-01	9.08e-01	9.08e-01	9.08e-01	9.08e-01	9.08e-01	9.08e-01	9.08e-01
Pu-244	8.98e-01	8.98e-01	8.98e-01	8.98e-01	8.98e-01	8.98e-01	8.98e-01	8.98e-01
Am-241	9.84e-01	9.84e-01	9.84e-01	9.84e-01	9.84e-01	9.84e-01	9.84e-01	9.84e-01
Am-242m	9.76e-01	9.76e-01	9.76e-01	9.76e-01	9.76e-01	9.76e-01	9.76e-01	9.76e-01
Am-243	9.80e-01	9.80e-01	9.80e-01	9.80e-01	9.80e-01	9.80e-01	9.80e-01	9.80e-01
Cm-242	3.10e-02	3.10e-02	3.10e-02	3.10e-02	3.10e-02	3.10e-02	3.10e-02	3.10e-02
Cm-243	6.79e-01	6.79e-01	6.79e-01	6.79e-01	6.79e-01	6.79e-01	6.79e-01	6.79e-01
Cm-244	5.45e-01	5.45e-01	5.45e-01	5.45e-01	5.45e-01	5.45e-01	5.45e-01	5.45e-01
Cm-245	1.01e+00	1.01e+00	1.01e+00	1.01e+00	1.01e+00	1.01e+00	1.01e+00	1.01e+00
Cm-246	1.00e+00	1.00e+00	1.00e+00	1.00e+00	1.00e+00	1.00e+00	1.00e+00	1.00e+00
Cm-247	9.24e-01	9.24e-01	9.24e-01	9.24e-01	9.24e-01	9.24e-01	9.24e-01	9.24e-01
Cm-248	3.68e+00	3.68e+00	3.68e+00	3.68e+00	3.68e+00	3.68e+00	3.68e+00	3.68e+00
Bk-249	3.24e-03	3.24e-03	3.24e-03	3.24e-03	3.24e-03	3.24e-03	3.24e-03	3.24e-03
Cf-248	9.04e-02	9.04e-02	9.04e-02	9.04e-02	9.04e-02	9.04e-02	9.04e-02	9.04e-02
Cf-249	1.28e+00	1.28e+00	1.28e+00	1.28e+00	1.28e+00	1.28e+00	1.28e+00	1.28e+00
Cf-250	5.76e-01	5.76e-01	5.76e-01	5.76e-01	5.76e-01	5.76e-01	5.76e-01	5.76e-01
Cf-251	1.31e+00	1.31e+00	1.31e+00	1.31e+00	1.31e+00	1.31e+00	1.31e+00	1.31e+00
Cf-252	2.93e-01	2.93e-01	2.93e-01	2.93e-01	2.93e-01	2.93e-01	2.93e-01	2.93e-01
Cf-254	6.55e-01	6.55e-01	6.55e-01	6.55e-01	6.55e-01	6.55e-01	6.55e-01	6.55e-01
Es-254	8.49e-02	8.49e-02	8.49e-02	8.49e-02	8.49e-02	8.49e-02	8.49e-02	8.49e-02

Table B.19 Dose coefficients for ingestion—effective dose (:Sv/Bq)

Nuclide	Scrap/ concrete	Food/ water	Metal product			Dust/slag/dross		
			Iron/steel	Copper	Aluminum	Iron/steel	Copper	Aluminum
H-3	1.8e-05	1.8e-05	1.8e-05	1.8e-05	1.8e-05	1.8e-05	1.8e-05	1.8e-05
C-14	5.8e-04	5.8e-04	5.8e-04	5.8e-04	5.8e-04	5.8e-04	5.8e-04	5.8e-04
Na-22	3.2e-03	3.2e-03	3.2e-03	3.2e-03	3.2e-03	3.2e-03	3.2e-03	3.2e-03
P-32	2.4e-03	2.4e-03	2.4e-03	2.4e-03	2.4e-03	2.4e-03	2.4e-03	2.4e-03
S-35	1.4e-04	1.4e-04	1.4e-04	1.4e-04	1.4e-04	1.4e-04	1.4e-04	1.4e-04
Cl-36	9.3e-04	9.3e-04	9.3e-04	9.3e-04	9.3e-04	9.3e-04	9.3e-04	9.3e-04
K-40	6.2e-03	6.2e-03	6.2e-03	6.2e-03	6.2e-03	6.2e-03	6.2e-03	6.2e-03
Ca-41	2.9e-04	2.9e-04	2.9e-04	2.9e-04	2.9e-04	2.9e-04	2.9e-04	2.9e-04
Ca-45	7.6e-04	7.6e-04	7.6e-04	7.6e-04	7.6e-04	7.6e-04	7.6e-04	7.6e-04
Sc-46	1.5e-03	1.5e-03	1.5e-03	1.5e-03	1.5e-03	1.5e-03	1.5e-03	1.5e-03
Cr-51	3.7e-05	3.8e-05	3.7e-05	3.7e-05	3.7e-05	3.8e-05	3.8e-05	3.8e-05
Mn-53	3.0e-05	3.0e-05	3.0e-05	3.0e-05	3.0e-05	3.0e-05	3.0e-05	3.0e-05
Mn-54	7.1e-04	7.1e-04	7.1e-04	7.1e-04	7.1e-04	7.1e-04	7.1e-04	7.1e-04
Fe-55	3.3e-04	3.3e-04	3.3e-04	3.3e-04	3.3e-04	3.3e-04	3.3e-04	3.3e-04
Fe-59	1.8e-03	1.8e-03	1.8e-03	1.8e-03	1.8e-03	1.8e-03	1.8e-03	1.8e-03
Co-56	2.3e-03	2.5e-03	2.3e-03	2.3e-03	2.3e-03	2.3e-03	2.3e-03	2.3e-03
Co-57	1.9e-04	2.1e-04	1.9e-04	1.9e-04	1.9e-04	1.9e-04	1.9e-04	1.9e-04
Co-58	7.0e-04	7.4e-04	7.0e-04	7.0e-04	7.0e-04	7.0e-04	7.0e-04	7.0e-04
Co-60	2.5e-03	3.4e-03	2.5e-03	2.5e-03	2.5e-03	2.5e-03	2.5e-03	2.5e-03
Ni-59	6.3e-05	6.3e-05	6.3e-05	6.3e-05	6.3e-05	6.3e-05	6.3e-05	6.3e-05
Ni-63	1.5e-04	1.5e-04	1.5e-04	1.5e-04	1.5e-04	1.5e-04	1.5e-04	1.5e-04
Zn-65	3.9e-03	3.9e-03	3.9e-03	3.9e-03	3.9e-03	3.9e-03	3.9e-03	3.9e-03
As-73	2.6e-04	2.6e-04	2.6e-04	2.6e-04	2.6e-04	2.6e-04	2.6e-04	2.6e-04
Se-75	2.6e-03	2.6e-03	2.6e-03	2.6e-03	2.6e-03	2.6e-03	2.6e-03	2.6e-03
Sr-85	5.6e-04	5.6e-04	5.6e-04	5.6e-04	5.6e-04	5.6e-04	5.6e-04	5.6e-04
Sr-89	2.6e-03	2.6e-03	2.6e-03	2.6e-03	2.6e-03	2.6e-03	2.6e-03	2.6e-03
Sr-90	3.1e-02	3.1e-02	3.1e-02	3.1e-02	3.1e-02	3.1e-02	3.1e-02	3.1e-02
Y-91	2.4e-03	2.4e-03	2.4e-03	2.4e-03	2.4e-03	2.4e-03	2.4e-03	2.4e-03
Zr-93	2.8e-04	2.8e-04	2.8e-04	2.8e-04	2.8e-04	2.8e-04	2.8e-04	2.8e-04
Zr-95	8.9e-04	8.9e-04	8.9e-04	8.9e-04	8.9e-04	8.9e-04	8.9e-04	8.9e-04
Nb-93m	1.2e-04	1.2e-04	1.2e-04	1.2e-04	1.2e-04	1.2e-04	1.2e-04	1.2e-04
Nb-94	1.7e-03	1.7e-03	1.7e-03	1.7e-03	1.7e-03	1.7e-03	1.7e-03	1.7e-03
Nb-95	5.8e-04	5.8e-04	5.8e-04	5.8e-04	5.8e-04	5.8e-04	5.8e-04	5.8e-04
Mo-93	2.6e-03	2.6e-03	2.6e-03	2.6e-03	2.6e-03	2.6e-03	2.6e-03	2.6e-03
Tc-97	8.3e-05	8.3e-05	8.3e-05	8.3e-05	8.3e-05	8.3e-05	8.3e-05	8.3e-05
Tc-97m	6.6e-04	6.6e-04	6.6e-04	6.6e-04	6.6e-04	6.6e-04	6.6e-04	6.6e-04
Tc-99	7.8e-04	7.8e-04	7.8e-04	7.8e-04	7.8e-04	7.8e-04	7.8e-04	7.8e-04
Ru-103	7.3e-04	7.3e-04	7.3e-04	7.3e-04	7.3e-04	7.3e-04	7.3e-04	7.3e-04
Ru-106	7.0e-03	7.0e-03	7.0e-03	7.0e-03	7.0e-03	7.0e-03	7.0e-03	7.0e-03
Ag-108m	2.3e-03	2.3e-03	2.3e-03	2.3e-03	2.3e-03	2.3e-03	2.3e-03	2.3e-03
Ag-110m	2.8e-03	2.8e-03	2.8e-03	2.8e-03	2.8e-03	2.8e-03	2.8e-03	2.8e-03
Cd-109	2.0e-03	2.0e-03	2.0e-03	2.0e-03	2.0e-03	2.0e-03	2.0e-03	2.0e-03
Sn-113	7.6e-04	7.6e-04	7.6e-04	7.6e-04	7.6e-04	7.6e-04	7.6e-04	7.6e-04
Sb-124	2.5e-03	2.5e-03	2.5e-03	2.5e-03	2.5e-03	2.5e-03	2.5e-03	2.5e-03
Sb-125	1.3e-03	1.3e-03	1.3e-03	1.3e-03	1.3e-03	1.3e-03	1.3e-03	1.3e-03
Te-123m	1.4e-03	1.4e-03	1.4e-03	1.4e-03	1.4e-03	1.4e-03	1.4e-03	1.4e-03
Te-127m	2.5e-03	2.5e-03	2.5e-03	2.5e-03	2.5e-03	2.5e-03	2.5e-03	2.5e-03
I-125	1.5e-02	1.5e-02	1.5e-02	1.5e-02	1.5e-02	1.5e-02	1.5e-02	1.5e-02
I-129	1.1e-01	1.1e-01	1.1e-01	1.1e-01	1.1e-01	1.1e-01	1.1e-01	1.1e-01
I-131	2.2e-02	2.2e-02	2.2e-02	2.2e-02	2.2e-02	2.2e-02	2.2e-02	2.2e-02
Cs-134	1.9e-02	1.9e-02	1.9e-02	1.9e-02	1.9e-02	1.9e-02	1.9e-02	1.9e-02
Cs-135	2.0e-03	2.0e-03	2.0e-03	2.0e-03	2.0e-03	2.0e-03	2.0e-03	2.0e-03
Cs-137	1.3e-02	1.3e-02	1.3e-02	1.3e-02	1.3e-02	1.3e-02	1.3e-02	1.3e-02
Ba-133	1.0e-03	1.0e-03	1.0e-03	1.0e-03	1.0e-03	1.0e-03	1.0e-03	1.0e-03
Ce-139	2.6e-04	2.6e-04	2.6e-04	2.6e-04	2.6e-04	2.6e-04	2.6e-04	2.6e-04
Ce-141	7.1e-04	7.1e-04	7.1e-04	7.1e-04	7.1e-04	7.1e-04	7.1e-04	7.1e-04
Ce-144	5.3e-03	5.3e-03	5.3e-03	5.3e-03	5.3e-03	5.3e-03	5.3e-03	5.3e-03
Pm-147	2.6e-04	2.6e-04	2.6e-04	2.6e-04	2.6e-04	2.6e-04	2.6e-04	2.6e-04

Table B.19 Dose coefficients for ingestion—effective dose (:Sv/Bq)

Nuclide	Scrap/ concrete	Food/ water	Metal product			Dust/slag/dross		
			Iron/steel	Copper	Aluminum	Iron/steel	Copper	Aluminum
Sm-151	9.8e-05	9.8e-05	9.8e-05	9.8e-05	9.8e-05	9.8e-05	9.8e-05	9.8e-05
Eu-152	1.4e-03	1.4e-03	1.4e-03	1.4e-03	1.4e-03	1.4e-03	1.4e-03	1.4e-03
Eu-154	2.0e-03	2.0e-03	2.0e-03	2.0e-03	2.0e-03	2.0e-03	2.0e-03	2.0e-03
Eu-155	3.2e-04	3.2e-04	3.2e-04	3.2e-04	3.2e-04	3.2e-04	3.2e-04	3.2e-04
Gd-153	2.7e-04	2.7e-04	2.7e-04	2.7e-04	2.7e-04	2.7e-04	2.7e-04	2.7e-04
Tb-160	1.6e-03	1.6e-03	1.6e-03	1.6e-03	1.6e-03	1.6e-03	1.6e-03	1.6e-03
Tm-170	1.3e-03	1.3e-03	1.3e-03	1.3e-03	1.3e-03	1.3e-03	1.3e-03	1.3e-03
Tm-171	1.1e-04	1.1e-04	1.1e-04	1.1e-04	1.1e-04	1.1e-04	1.1e-04	1.1e-04
Ta-182	1.5e-03	1.5e-03	1.5e-03	1.5e-03	1.5e-03	1.5e-03	1.5e-03	1.5e-03
W-181	7.6e-05	7.6e-05	7.6e-05	7.6e-05	7.6e-05	7.6e-05	7.6e-05	7.6e-05
W-185	4.4e-04	4.4e-04	4.4e-04	4.4e-04	4.4e-04	4.4e-04	4.4e-04	4.4e-04
Os-185	5.1e-04	5.1e-04	5.1e-04	5.1e-04	5.1e-04	5.1e-04	5.1e-04	5.1e-04
Ir-192	1.4e-03	1.4e-03	1.4e-03	1.4e-03	1.4e-03	1.4e-03	1.4e-03	1.4e-03
Tl-204	1.3e-03	1.3e-03	1.3e-03	1.3e-03	1.3e-03	1.3e-03	1.3e-03	1.3e-03
Pb-210	9.2e-01	9.2e-01	9.2e-01	9.2e-01	9.2e-01	9.2e-01	9.2e-01	9.2e-01
Bi-207	1.3e-03	1.3e-03	1.3e-03	1.3e-03	1.3e-03	1.3e-03	1.3e-03	1.3e-03
Po-210	2.4e-01	2.4e-01	2.4e-01	2.4e-01	2.4e-01	2.4e-01	2.4e-01	2.4e-01
Ra-226	2.8e-01	2.8e-01	2.8e-01	2.8e-01	2.8e-01	2.8e-01	2.8e-01	2.8e-01
Ra-228	6.7e-01	6.7e-01	6.7e-01	6.7e-01	6.7e-01	6.7e-01	6.7e-01	6.7e-01
Ac-227	1.2e+00	1.2e+00	1.2e+00	1.2e+00	1.2e+00	1.2e+00	1.2e+00	1.2e+00
Th-228	1.4e-01	1.4e-01	1.4e-01	1.1e-01	1.1e-01	1.1e-01	1.1e-01	1.4e-01
Th-229	6.0e-01	6.0e-01	6.0e-01	3.2e-01	3.2e-01	3.2e-01	3.2e-01	6.0e-01
Th-230	2.1e-01	2.1e-01	2.1e-01	8.7e-02	8.7e-02	8.7e-02	8.7e-02	2.1e-01
Th-232	2.2e-01	2.2e-01	2.2e-01	9.2e-02	9.2e-02	9.2e-02	9.2e-02	2.2e-01
Pa-231	7.1e-01	7.1e-01	7.1e-01	7.1e-01	7.1e-01	7.1e-01	7.1e-01	7.1e-01
U-232	3.3e-01	3.3e-01	3.3e-01	3.3e-01	3.3e-01	3.7e-02	3.7e-02	3.3e-01
U-233	5.0e-02	5.0e-02	5.0e-02	5.0e-02	5.0e-02	8.5e-03	8.5e-03	5.0e-02
U-234	4.9e-02	4.9e-02	4.9e-02	4.9e-02	4.9e-02	8.3e-03	8.3e-03	4.9e-02
U-235	4.6e-02	4.6e-02	4.6e-02	4.6e-02	4.6e-02	8.6e-03	8.6e-03	4.6e-02
U-236	4.6e-02	4.6e-02	4.6e-02	4.6e-02	4.6e-02	7.9e-03	7.9e-03	4.6e-02
U-238	4.7e-02	4.7e-02	4.7e-02	4.7e-02	4.7e-02	1.1e-02	1.1e-02	4.7e-02
Np-237	1.1e-01	1.1e-01	1.1e-01	1.1e-01	1.1e-01	1.1e-01	1.1e-01	1.1e-01
Pu-236	8.6e-02	8.6e-02	8.6e-02	8.6e-02	8.6e-02	8.6e-02	8.6e-02	8.6e-02
Pu-238	2.3e-01	2.3e-01	2.3e-01	2.3e-01	2.3e-01	2.3e-01	2.3e-01	2.3e-01
Pu-239	2.5e-01	2.5e-01	2.5e-01	2.5e-01	2.5e-01	2.5e-01	2.5e-01	2.5e-01
Pu-240	2.5e-01	2.5e-01	2.5e-01	2.5e-01	2.5e-01	2.5e-01	2.5e-01	2.5e-01
Pu-241	4.7e-03	4.7e-03	4.7e-03	4.7e-03	4.7e-03	4.7e-03	4.7e-03	4.7e-03
Pu-242	2.4e-01	2.4e-01	2.4e-01	2.4e-01	2.4e-01	2.4e-01	2.4e-01	2.4e-01
Pu-244	2.4e-01	2.4e-01	2.4e-01	2.4e-01	2.4e-01	2.4e-01	2.4e-01	2.4e-01
Am-241	2.0e-01	2.0e-01	2.0e-01	2.0e-01	2.0e-01	2.0e-01	2.0e-01	2.0e-01
Am-242m	2.0e-01	2.0e-01	2.0e-01	2.0e-01	2.0e-01	2.0e-01	2.0e-01	2.0e-01
Am-243	2.0e-01	2.0e-01	2.0e-01	2.0e-01	2.0e-01	2.0e-01	2.0e-01	2.0e-01
Cm-242	1.2e-02	1.2e-02	1.2e-02	1.2e-02	1.2e-02	1.2e-02	1.2e-02	1.2e-02
Cm-243	1.5e-01	1.5e-01	1.5e-01	1.5e-01	1.5e-01	1.5e-01	1.5e-01	1.5e-01
Cm-244	1.2e-01	1.2e-01	1.2e-01	1.2e-01	1.2e-01	1.2e-01	1.2e-01	1.2e-01
Cm-245	2.1e-01	2.1e-01	2.1e-01	2.1e-01	2.1e-01	2.1e-01	2.1e-01	2.1e-01
Cm-246	2.1e-01	2.1e-01	2.1e-01	2.1e-01	2.1e-01	2.1e-01	2.1e-01	2.1e-01
Cm-247	1.9e-01	1.9e-01	1.9e-01	1.9e-01	1.9e-01	1.9e-01	1.9e-01	1.9e-01
Cm-248	7.7e-01	7.7e-01	7.7e-01	7.7e-01	7.7e-01	7.7e-01	7.7e-01	7.7e-01
Bk-249	9.7e-04	9.7e-04	9.7e-04	9.7e-04	9.7e-04	9.7e-04	9.7e-04	9.7e-04
Cf-248	2.8e-02	2.8e-02	2.8e-02	2.8e-02	2.8e-02	2.8e-02	2.8e-02	2.8e-02
Cf-249	3.5e-01	3.5e-01	3.5e-01	3.5e-01	3.5e-01	3.5e-01	3.5e-01	3.5e-01
Cf-250	1.6e-01	1.6e-01	1.6e-01	1.6e-01	1.6e-01	1.6e-01	1.6e-01	1.6e-01
Cf-251	3.6e-01	3.6e-01	3.6e-01	3.6e-01	3.6e-01	3.6e-01	3.6e-01	3.6e-01
Cf-252	9.0e-02	9.0e-02	9.0e-02	9.0e-02	9.0e-02	9.0e-02	9.0e-02	9.0e-02
Cf-254	4.0e-01	4.0e-01	4.0e-01	4.0e-01	4.0e-01	4.0e-01	4.0e-01	4.0e-01
Es-254	2.8e-02	2.8e-02	2.8e-02	2.8e-02	2.8e-02	2.8e-02	2.8e-02	2.8e-02

Table B.20 Dose coefficients for external exposure to contaminated soil

Nuclide	Surface (:Sv/h per Bq/m^2)		Infinite depth (:Sv/h per Bq/g)		Nuclide	Surface (:Sv/h per Bq/m^2)		Infinite depth (:Sv/h per Bq/g)	
	EDE	Eff. dose	EDE	Eff. dose		EDE	Eff. dose	EDE	Eff. dose
H-3	0.00e+00	0.00e+00	0.00e+00	0.00e+00	Sm-151	1.81e-11	1.28e-11	3.04e-08	2.09e-08
C-14	5.80e-11	4.61e-11	4.15e-07	3.40e-07	Eu-152	3.96e-06	3.85e-06	2.16e-01	2.04e-01
Na-22	7.56e-06	7.38e-06	4.22e-01	3.97e-01	Eu-154	4.28e-06	4.21e-06	2.37e-01	2.24e-01
P-32	1.05e-08	3.07e-07	3.63e-04	6.28e-04	Eu-155	2.12e-07	1.93e-07	5.62e-03	4.99e-03
S-35	6.05e-11	4.79e-11	4.59e-07	3.78e-07	Gd-153	3.82e-07	3.33e-07	7.55e-03	6.57e-03
Cl-36	2.42e-09	4.03e-08	7.37e-05	7.66e-05	Tb-160	3.89e-06	3.78e-06	2.13e-01	2.02e-01
K-40	5.26e-07	7.31e-07	3.21e-02	3.07e-02	Tm-170	2.13e-08	9.50e-08	4.61e-04	4.35e-04
Ca-41	0.00e+00	0.00e+00	0.00e+00	0.00e+00	Tm-171	2.31e-09	2.00e-09	3.44e-05	2.90e-05
Ca-45	1.66e-10	1.36e-10	1.93e-06	1.65e-06	Ta-182	4.43e-06	4.28e-06	2.45e-01	2.32e-01
Sc-46	6.95e-06	6.77e-06	3.91e-01	3.70e-01	W-181	1.41e-07	1.24e-07	2.36e-03	2.01e-03
Cr-51	1.11e-07	1.07e-07	5.38e-03	4.99e-03	W-185	6.62e-10	6.16e-10	1.34e-05	1.18e-05
Mn-53	0.00e+00	0.00e+00	0.00e+00	0.00e+00	Os-185	2.53e-06	2.45e-06	1.28e-01	1.20e-01
Mn-54	2.92e-06	2.84e-06	1.59e-01	1.50e-01	Ir-192	2.89e-06	2.79e-06	1.42e-01	1.32e-01
Fe-55	0.00e+00	0.00e+00	0.00e+00	0.00e+00	Tl-204	5.33e-09	3.89e-08	1.25e-04	1.20e-04
Fe-59	4.03e-06	3.96e-06	2.36e-01	2.23e-01	Pb-210	1.27e-08	1.34e-07	1.88e-04	2.31e-04
Co-56	1.18e-05	1.16e-05	7.26e-01	6.91e-01	Bi-207	5.33e-06	5.22e-06	2.89e-01	2.72e-01
Co-57	4.14e-07	3.92e-07	1.54e-02	1.41e-02	Po-210	2.98e-11	2.91e-11	1.61e-06	1.52e-06
Co-58	3.42e-06	3.32e-06	1.84e-01	1.73e-01	Ra-226	5.98e-06	6.07e-06	3.45e-01	3.27e-01
Co-60	8.46e-06	8.28e-06	5.00e-01	4.75e-01	Ra-228	3.34e-06	3.38e-06	1.84e-01	1.75e-01
Ni-59	0.00e+00	0.00e+00	0.00e+00	0.00e+00	Ac-227	1.39e-06	1.68e-06	6.20e-02	5.76e-02
Ni-63	0.00e+00	0.00e+00	0.00e+00	0.00e+00	Th-228	5.06e-06	5.18e-06	3.14e-01	2.98e-01
Zn-65	1.99e-06	1.94e-06	1.14e-01	1.08e-01	Th-229	1.14e-06	1.24e-06	4.90e-02	4.54e-02
As-73	2.14e-08	1.87e-08	2.90e-04	2.42e-04	Th-230	2.70e-09	2.29e-09	3.73e-05	3.30e-05
Se-75	1.36e-06	1.30e-06	6.11e-02	5.64e-02	Th-232	1.98e-09	1.64e-09	1.61e-05	1.41e-05
Sr-85	1.80e-06	1.74e-06	9.16e-02	8.52e-02	Pa-231	1.47e-07	1.36e-07	5.88e-03	5.44e-03
Sr-89	8.17e-09	2.47e-07	2.80e-04	4.66e-04	U-232	3.64e-09	2.91e-09	2.78e-05	2.45e-05
Sr-90	2.26e-07	2.19e-07	9.87e-03	9.06e-03	U-233	2.58e-09	2.16e-09	4.31e-05	3.90e-05
Y-91	2.07e-08	2.69e-07	1.00e-03	1.17e-03	U-234	2.69e-09	2.11e-09	1.24e-05	1.06e-05
Zr-93	0.00e+00	0.00e+00	0.00e+00	0.00e+00	U-235	5.99e-07	5.60e-07	2.34e-02	2.13e-02
Zr-95	2.61e-06	2.53e-06	1.40e-01	1.31e-01	U-236	2.34e-09	1.81e-09	6.62e-06	5.49e-06
Nb-93m	3.38e-09	2.46e-09	3.21e-06	2.27e-06	U-238	9.76e-08	4.28e-07	4.08e-03	4.24e-03
Nb-94	5.51e-06	5.36e-06	2.98e-01	2.81e-01	Np-237	8.05e-07	7.60e-07	3.39e-02	3.12e-02
Nb-95	2.69e-06	2.62e-06	1.45e-01	1.37e-01	Pu-236	3.53e-09	2.65e-09	7.03e-06	5.59e-06
Mo-93	1.92e-08	1.40e-08	1.82e-05	1.28e-05	Pu-238	3.02e-09	2.25e-09	4.67e-06	3.60e-06
Tc-97	2.33e-08	1.67e-08	2.49e-05	1.74e-05	Pu-239	1.32e-09	1.02e-09	9.10e-06	8.12e-06
Tc-97m	2.22e-08	1.61e-08	5.88e-05	4.73e-05	Pu-240	2.89e-09	2.16e-09	4.52e-06	3.47e-06
Tc-99	2.81e-10	2.34e-10	3.87e-06	3.35e-06	Pu-241	6.95e-12	6.19e-12	1.82e-07	1.64e-07
Ru-103	1.67e-06	1.62e-06	8.47e-02	7.89e-02	Pu-242	2.40e-09	1.79e-09	3.95e-06	3.06e-06
Ru-106	7.63e-07	1.24e-06	3.98e-02	3.84e-02	Pu-244	1.20e-06	1.41e-06	6.25e-02	5.90e-02
Ag-108m	5.77e-06	5.57e-06	2.98e-01	2.79e-01	Am-241	9.90e-08	8.39e-08	1.35e-03	1.15e-03
Ag-110m	9.54e-06	9.30e-06	5.29e-01	4.99e-01	Am-242m	7.87e-08	7.67e-08	2.07e-03	1.89e-03
Cd-109	1.16e-07	8.69e-08	8.18e-04	6.94e-04	Am-243	7.79e-07	7.27e-07	2.76e-02	2.51e-02
Sn-113	9.91e-07	9.34e-07	4.52e-02	4.19e-02	Cm-242	3.44e-09	2.53e-09	5.27e-06	3.97e-06
Sb-124	6.16e-06	6.12e-06	3.61e-01	3.42e-01	Cm-243	4.50e-07	4.25e-07	1.80e-02	1.65e-02
Sb-125	1.56e-06	1.49e-06	7.56e-02	7.04e-02	Cm-244	3.16e-09	2.32e-09	3.88e-06	2.76e-06
Te-123m	5.15e-07	4.79e-07	1.94e-02	1.77e-02	Cm-245	3.13e-07	2.90e-07	1.05e-02	9.45e-03
Te-127m	5.89e-08	6.72e-08	1.03e-03	9.33e-04	Cm-246	2.83e-09	2.07e-09	3.58e-06	2.56e-06
I-125	1.54e-07	1.14e-07	5.10e-04	3.68e-04	Cm-247	1.20e-06	1.16e-06	5.73e-02	5.32e-02
I-129	9.29e-08	7.06e-08	3.99e-04	2.96e-04	Cm-248	2.16e-09	1.58e-09	2.71e-06	1.93e-06
I-131	1.35e-06	1.31e-06	6.68e-02	6.22e-02	Bk-249	2.47e-11	1.93e-11	1.43e-07	1.16e-07
Cs-134	5.47e-06	5.33e-06	2.92e-01	2.74e-01	Cf-248	2.79e-09	2.01e-09	3.84e-06	2.71e-06
Cs-135	1.20e-10	9.68e-11	1.18e-06	9.91e-07	Cf-249	1.18e-06	1.13e-06	5.71e-02	5.30e-02
Cs-137	1.99e-06	1.98e-06	1.05e-01	9.84e-02	Cf-250	2.65e-09	1.92e-09	3.65e-06	2.56e-06
Ba-133	1.43e-06	1.34e-06	6.11e-02	5.61e-02	Cf-251	4.39e-07	4.07e-07	1.62e-02	1.48e-02
Ce-139	5.62e-07	5.15e-07	1.96e-02	1.79e-02	Cf-252	2.60e-09	1.89e-09	5.42e-06	4.20e-06
Ce-141	2.66e-07	2.49e-07	9.79e-03	8.93e-03	Cf-254	8.64e-12	6.23e-12	1.19e-08	8.35e-09
Ce-144	2.08e-07	6.45e-07	9.89e-03	1.01e-02	Es-254	3.11e-06	3.06e-06	1.71e-01	1.62e-01
Pm-147	1.23e-10	1.01e-10	1.54e-06	1.32e-06					

Table B.21 Soil-water distribution coefficients and food transfer factors

Element	K_d (cm^3/g)				Plant (B_{iv})		Meat (d/kg)		Milk (d/L)	
	$:_g$	F_g	Min	Max	$:_g$	F_g	$:_g$	F_g	$:_g$	F_g
H	6.02e-02	1.65	4.00e-02	2.82e-01	4.81e+00	3.00	1.20e-02	2.72	1.01e-02	2.46
C	1.10e+01	25.03	5.00e+00	3.90e+01	6.98e-01	2.46	3.11e-02	2.72	1.23e-02	2.46
Na	1.54e+02	25.03	4.40e+01	5.40e+02	4.98e-02	2.72	7.97e-02	1.22	4.00e-02	1.65
P	8.90e+01	—	—	—	1.00e+00	3.00	4.98e-02	1.22	2.00e-02	2.01
S	3.85e+01	25.03	1.84e-03	8.07e+05	6.01e-01	3.00	2.00e-01	2.72	2.00e-02	2.01
Cl	5.37e+00	25.03	1.50e+00	1.90e+01	2.01e+01	3.00	4.00e-02	2.01	2.00e-02	1.65
K	5.47e+00	1.63	1.20e+00	2.49e+01	3.01e-01	3.00	2.00e-02	1.22	7.01e-03	1.65
Ca	4.06e+00	2.18	1.20e+00	4.52e+01	5.02e-01	3.00	2.01e-03	1.22	3.00e-03	1.65
Sc	9.34e+02	25.03	4.46e-02	1.96e+07	2.01e-03	3.00	2.01e-03	2.72	5.98e-03	2.46
Cr	1.03e+02	15.80	1.20e+00	2.52e+03	9.95e-03	2.72	2.99e-02	1.49	2.01e-03	2.01
Mn	1.58e+02	9.87	2.00e-01	7.70e+04	3.01e-01	2.46	9.98e-04	2.01	3.01e-04	2.01
Fe	2.09e+02	14.44	1.40e+00	6.00e+03	9.98e-04	2.46	2.99e-02	1.49	3.01e-04	2.01
Co	2.35e+02	12.55	9.46e-02	1.40e+04	7.97e-02	2.46	2.99e-02	2.72	2.01e-03	2.01
Ni	4.24e+02	4.31	6.00e+01	4.70e+03	4.98e-02	2.46	4.99e-03	2.46	2.00e-02	2.01
Zn	1.07e+03	84.77	1.00e-01	1.00e+05	3.99e-01	2.46	1.00e-01	1.35	9.95e-03	2.46
As	1.10e+02	—	—	—	7.97e-02	3.00	2.00e-02	2.72	1.00e-04	2.46
Se	1.13e+02	1.77	1.95e+01	1.70e+02	1.00e-01	3.00	1.00e-01	2.46	9.95e-03	2.46
Sr	3.15e+01	8.33	4.50e-02	2.21e+04	3.01e-01	2.72	9.95e-03	1.49	2.01e-03	1.65
Y	7.94e+02	25.03	3.79e-02	1.66e+07	2.01e-03	3.00	2.01e-03	2.46	6.01e-05	2.46
Zr	1.38e+03	25.03	1.90e+01	2.89e+07	9.98e-04	3.00	9.96e-07	2.46	5.98e-07	2.01
Nb	3.80e+02	25.03	1.10e+02	1.30e+03	9.95e-03	3.00	9.96e-07	2.46	2.00e-06	2.01
Mo	2.63e+01	5.64	3.70e-01	4.00e+02	1.00e-01	3.00	9.96e-07	2.46	2.01e-03	2.01
Tc	5.12e-01	23.57	2.90e-03	3.40e+02	5.00e+00	2.46	1.00e-04	2.01	9.98e-04	2.01
Ru	1.59e+03	22.87	5.00e+00	8.70e+04	2.99e-02	2.46	2.01e-03	2.46	2.00e-05	1.82
Ag	2.17e+02	8.17	2.70e+00	3.30e+04	4.01e-03	2.46	2.01e-03	2.01	5.98e-03	2.01
Cd	3.38e+01	19.89	1.30e+00	1.70e+04	5.02e-01	3.00	9.98e-04	2.46	2.01e-03	2.46
Sn	8.29e+02	25.03	3.95e-02	1.74e+07	3.01e-01	3.00	9.95e-03	2.72	9.98e-04	2.46
Sb	1.74e+02	25.03	4.50e+01	1.30e+03	9.95e-03	2.72	9.98e-04	2.46	6.01e-05	2.46
Te	3.81e+01	25.03	1.82e-03	7.99e+05	1.00e-01	2.72	7.01e-03	2.46	5.00e-04	1.82
I	4.57e+00	8.94	4.00e-02	3.70e+02	2.00e-02	2.46	4.00e-02	1.49	9.95e-03	1.65
Cs	4.46e+02	10.28	3.33e-01	1.45e+05	4.00e-02	2.72	4.98e-02	1.49	9.95e-03	1.65
Ba	4.47e+01	3388	5.51e-10	3.62e+12	9.95e-03	3.00	1.99e-04	2.46	5.00e-04	2.01
Ce	2.00e+03	8.00	4.00e+01	5.60e+04	2.01e-03	2.72	2.00e-05	2.46	3.01e-05	2.01
Pm	8.29e+02	25.03	2.40e+02	2.90e+03	2.01e-03	3.00	2.01e-03	2.72	6.01e-05	2.46
Sm	8.29e+02	25.03	2.40e+02	2.90e+03	2.01e-03	3.00	2.01e-03	2.72	6.01e-05	2.46
Eu	8.29e+02	25.03	2.40e+02	2.90e+03	2.01e-03	3.00	2.01e-03	2.72	6.01e-05	2.46
Gd	8.29e+02	25.03	2.40e+02	2.90e+03	2.01e-03	3.00	2.01e-03	2.72	6.01e-05	2.46
Tb	1.59e+02	25.03	7.56e-03	3.32e+06	2.01e-03	3.00	2.01e-03	2.72	6.01e-05	2.46
Tm	1.59e+02	25.03	7.56e-03	3.32e+06	3.60e-03	—	3.26e-03	—	8.90e-05	—
Ta	2.57e+02	25.03	1.23e-02	5.39e+06	2.01e-03	3.00	4.98e-06	2.72	4.98e-06	2.46
W	1.59e+02	25.03	7.56e-03	3.32e+06	8.03e-01	2.72	4.00e-02	2.46	3.01e-04	2.46
Os	1.59e+02	25.03	7.56e-03	3.32e+06	5.36e-02	—	3.26e-03	—	2.97e-06	—
Ir	2.04e+02	25.03	9.75e-03	4.28e+06	2.99e-02	3.00	2.01e-03	2.72	2.00e-06	2.46
Tl	7.08e+01	25.03	2.00e+01	2.50e+02	2.00e-01	3.00	2.00e-02	2.72	3.00e-03	2.46
Pb	2.39e+03	15.80	4.50e+00	5.90e+04	4.01e-03	2.46	8.01e-04	2.01	3.01e-04	2.46
Bi	1.05e+02	25.03	3.00e+01	3.70e+02	1.00e-01	3.00	2.01e-03	2.72	9.98e-04	2.46
Po	1.81e+02	5.37	9.00e+00	3.26e+04	1.01e-03	2.46	4.99e-03	2.01	4.02e-04	2.01
Ra	3.53e+03	5.47	5.70e+01	5.30e+05	4.00e-02	2.46	9.98e-04	2.01	9.98e-04	1.65
Ac	8.29e+02	25.03	2.40e+02	2.90e+03	9.98e-04	3.00	2.00e-05	2.72	2.00e-06	2.46
Th	5.88e+03	37.34	2.07e+02	1.30e+07	9.98e-04	2.46	1.00e-04	2.72	4.98e-06	2.46
Pa	3.80e+02	25.03	1.10e+02	1.30e+03	9.95e-03	3.00	4.98e-06	2.72	4.98e-06	2.46
U	1.26e+02	22.87	3.00e-02	4.00e+05	2.01e-03	2.46	8.01e-04	2.01	4.02e-04	1.82
Np	1.71e+01	9.49	1.60e-01	2.60e+03	2.00e-02	2.46	9.98e-04	2.01	1.00e-05	2.01
Pu	9.53e+02	6.62	1.10e+01	3.00e+05	9.98e-04	2.46	1.00e-04	1.22	9.96e-07	1.65
Am	1.45e+03	23.34	1.00e+00	4.50e+05	9.98e-04	2.46	5.02e-05	1.22	2.00e-06	2.01
Cm	6.77e+03	6.17	9.30e+01	5.20e+04	9.98e-04	2.46	2.00e-05	2.72	2.00e-06	2.46
Bk	1.43e+03	—	—	—	1.48e-03	—	5.12e-05	—	2.54e-06	—
Cf	1.38e+03	25.03	1.90e+01	2.89e+07	9.98e-04	3.00	6.01e-05	2.72	2.00e-06	2.46
Es	1.38e+03	25.03	1.90e+01	2.89e+07	1.48e-03	—	5.12e-05	—	2.54e-06	—

Notes to Tables B.16 and B.18: Dose conversion factors from Eckerman and Ryman (1988)

Notes to Tables B.17 and B.19: Dose coefficients from ICRP (1994)

Notes to Table B.21:

$:_g$ = geometric mean of lognormal distribution, based on values presented by Yu et al. (2000)

F_g = geometric standard deviation of lognormal distribution (ibid.); if entry is blank, value in previous column is a fixed value, as listed by Kennedy and Strenge (1992)

References

Eckerman, K. F., A. B. Wolbarst, and A. C. B. Richardson. 1988. "Limiting Values of Radionuclide Intake and Air Concentration and Dose Conversion Factors for Inhalation, Submersion, and Ingestion," Federal Guidance Report No. 11, EPA-520/1-88-020. Washington, DC: U.S. Environmental Protection Agency, Office of Radiation Programs.

Eckerman and Ryman. 1993. "External Exposure to Radionuclides in Air, Water, and Soil." Federal Guidance Report No. 12. EPA 402-R-93-081. Washington, DC: U.S. Environmental Protection Agency, Office of Radiation and Indoor Air.

Environmental Protection Agency (U.S.) (EPA). 1997. "Exposure Factors Handbook," EPA/600/P-95/002Fa. Washington, DC: Author.

International Commission on Radiation Protection (ICRP). 1987. "Data for Use in Protection Against External Radiation," ICRP Publication 51. Annals of the ICRP, 17 (2/3). Oxford: Pergamon Press.

International Commission on Radiological Protection (ICRP). 1994. "Dose Coefficients for Intakes of Radionuclides by Workers," ICRP Publication 68. Annals of the ICRP, 24 (4). Tarrytown, NY: Elsevier Science, Inc.

International Commission on Radiological Protection (ICRP). 1996. "Conversion Coefficients for use in Radiological Protection against External Radiation," ICRP Publication 74. Annals of the ICRP, 26 (3/4). Tarrytown, NY: Elsevier Science, Inc.

International Atomic Energy Agency (IAEA). 1989. "Evaluating the Reliability of Predictions Made Using Environmental Transfer Models," Safety Series 100. Vienna: Author.

Kennedy, W. E., and D. L. Strenge. 1992. "Residual Radioactive Contamination From Decommissioning: Technical Basis for Translating Contamination Levels to Annual Total Effective Dose Equivalent," NUREG/CR-5512. Vol. 1. Washington, DC: U.S. Nuclear Regulatory Commission.

Yu, C., et al. 2000. "Development of Probabilistic RESRAD 6.0 and RESRAD-BUILD 3.0 Computer Codes," NUREG/CR-6697, ANL/EAD/TM-98. Washington, DC: U.S. Nuclear Regulatory Commission.

APPENDIX C

EXTERNAL EXPOSURE DOSE COEFFICIENTS

CONTENTS

Page

Appendix C External Exposure Dose Coefficients C-1
C.1 Methodology C-1
C.1.1 Radiation Transport Methods C-1
C.1.2 Calculational Methods C-2
C.1.2.1 Dose Coefficients for Individual Nuclides C-2
C.1.2.2 External Bremsstrahlung C-3
C.1.2.3 Variance Reduction C-4
C.1.2.4 Uncertainty C-4

C.2 Steel Scenarios C-5
C.2.1 Scrap Pile C-5
C.2.1.1 Exposure Geometry C-5
C.2.1.2 Results of Analysis C-7
C.2.2 Slag Pile C-9
C.2.3 Dust Pile C-10
C.2.4 Baghouse C-11
C.2.5 Large Metal Object C-12
C.2.6 Small Metal Object C-16
C.2.7 Small Object Next to Body C-17
C.2.7.1 Analytical Approach C-17
C.2.7.2 Results of Analysis C-19
C.2.8 Truck Scenarios C-22
C.2.8.1 Scrap Truck C-23
C.2.8.2 Slag Truck C-26
C.2.8.3 Dry Bulk Trailer C-27
C.2.8.3.1 Worker Atop Dust Truck C-28
C.2.8.3.2 Dust in Dry Bulk Trailer C-30
C.2.8.4 Dust in Dump Trailer C-30
C.2.8.5 Truck With I-Beams C-31
C.2.9 Cement Basement C-34
C.2.10 House with Steel Studs C-35
C.2.11 Auto—Cast Iron Engine Block C-38
C.2.12 Diesel Truck C-39
C.2.13 Hull Plate C-41
C.2.14 Steel Ship C-42
C.2.14.1 General Description C-43
C.2.14.2 Compartment Densities C-46
C.2.14.3 Specific Compartment Descriptions C-47
C.2.14.3.1 Forward Compartment C-47
C.2.14.3.2 Fuel Oil Storage Compartment C-47
C.2.14.3.3 Large Cargo C-47

Contents (continued)

Page

C.2.14.3.4 Ammunition C-47
C.2.14.3.5 Dry-Refrigerated Storage C-48
C.2.14.3.6 Engine Rooms C-48
C.2.14.3.7 Auxiliary Rooms C-48
C.2.14.3.8 Aft Compartment C-49
C.2.14.3.9 Superstructure Compartments C-49
C.2.14.4 Exposure Geometry C-49
C.2.14.5 Composition of Materials C-53
C.2.14.6 Results of Analysis C-53

C.3 Copper C-54
C.3.1 Copper Scrap Pile C-56
C.3.2 Copper Slag Pile C-58
C.3.3 Truck Loaded with Metal Product C-59

C.4 Aluminum C-61
C.4.1 Aluminum Scrap Pile C-61
C.4.2 Dross Pile C-63
C.4.3 Large Aluminum Object C-64
C.4.4 Small Aluminum Object C-64
C.4.5 Aluminum Scrap Truck C-65
C.4.6 Dross Truck C-66
C.4.7 Aluminum Dust Truck C-68
C.4.8 Truck Loaded with Aluminum Product C-69
C.4.9 Auto—Aluminum Engine Block C-70
C.4.10 Aluminum Cooking Pot C-71

C.5 Concrete C-72
C.5.1 Concrete Pile C-73
C.5.2 Concrete Truck C-73

C.6 External Exposure Dose Coefficients for Individual Radionuclides C-75

References C-102

Tables

Page

C.1 Composition of materials in steel analysis (wt. fraction) C-6
C.2 Concrete composition C-7
C.3 Dose rates from pile of steel scrap C-9
C.4 Dose rates from pile of steel slag C-11
C.5 Effective dose equivalent rates from pile of EAF dust (Sv/s per Bq/g) C-13
C.6 Effective dose rates from pile of EAF dust (Sv/s per Bq/g) C-13
C.7 Baghouse geometry (cm) C-14
C.8 Dose rates in baghouse C-14
C.9 Dose rates from large metal object C-15
C.10 Large metal object–$ bremsstrahlung (Sv/s per Bq/g) C-15
C.11 Dose rates from small metal object C-16
C.12 Small metal object–$ bremsstrahlung C-16
C.13 Tissue weighting factors C-18
C.14 Organ masses of anthropomorphic phantoms (g) C-20
C.15 Dose rates from small object next to body C-22
C.16 Small object next to body—uncertainty parameter C-22
C.17 Small object next to body–$ bremsstrahlung C-22
C.18 Scrap truck driver exposure geometry (cm) C-23
C.19 Dose rates to scrap truck driver C-25
C.20 Slag truck driver exposure geometry (cm) C-26
C.21 Dose rates to slag truck driver C-27
C.22 Dry bulk trailer exposure geometry (cm) C-29
C.23 Dose rates to worker atop dust truck C-29
C.24 Dose rates to driver hauling EAF dust in dry bulk trailer C-30
C.25 Dump trailer hauling EAF dust: exposure geometry (cm) C-31
C.26 Hauling EAF dust in dump trailer: dose rates in driver's seat C-32
C.27 Hauling EAF dust in dump trailer: dose rates in sleeper berth C-32
C.28 Dimensions of individual I-beam C-33
C.29 I-beam geometry (cm) C-33
C.30 Steel product truck driver exposure geometry C-33
C.31 Dose rates to truck driver hauling steel products C-34
C.32 Basement dweller exposure geometry (cm) C-35
C.33 Dose rates to cement basement dweller C-36
C.34 Steel-studded house exposure geometry (cm) C-37
C.35 Dose rates in steel-studded house C-38
C.36 Engine block exposure geometry (cm) C-39
C.37 Dose rates to driver of automobile with cast iron engine block C-40
C.38 Diesel truck driver exposure geometry (cm) C-41
C.39 Dose rates in driver's seat of truck with cast iron diesel engine block C-42
C.40 Dose rates in sleeper berth of truck with cast iron diesel engine block C-43
C.41 Dose rates from steel hull plate C-44

Tables (continued)

Page
C.42 Dose rates from $ bremsstrahlung from steel hull plate C-44
C.43 Steel ship exposure geometry—structures (cm) C-51
C.44 Steel ship exposure geometry—compartments (cm) C-52
C.45 Taper of bow: coordinates of cylindrical shells C-52
C.46 Composition of materials and compartments of ship C-53
C.47 Dose rates in steel ship C-54
C.48 Scoping calculation of intensity of photons emitted from Cu vs. Fe C-55
C.49 Corresponding exposure geometries in copper and steel analyses C-56
C.50 Composition of materials unique to copper analysis (wt. fraction) C-56
C.51 Dose rates from pile of copper scrap C-57
C.52 Worker handling copper slag: exposure geometry C-58
C.53 Dose rates to worker handling copper slag C-59
C.54 Driver of tractor-trailer hauling copper tubes: exposure geometry C-60
C.55 Hauling copper tubes: dose rates in driver's seat C-60
C.56 Hauling copper tubes: dose rates in sleeper berth C-61
C.57 Composition of materials unique to aluminum analysis (wt. fraction) C-62
C.58 Dose rates from pile of aluminum scrap C-63
C.59 Dose rates from pile of aluminum dross C-64
C.60 Dose rates from large aluminum object C-65
C.61 Dose rates from small aluminum object C-66
C.62 Aluminum scrap truck driver exposure geometry (cm) C-66
C.63 Dose rates to aluminum scrap truck driver C-67
C.64 Dross truck driver exposure geometry (cm) C-67
C.65 Dose rates to dross truck driver C-68
C.66 Aluminum dust truck driver exposure geometry (cm) C-68
C.67 Dose rates to aluminum dust truck driver C-69
C.68 Aluminum products truck driver exposure geometry (cm) C-70
C.69 Dose rates to aluminum product truck driver C-70
C.70 Dose rates to driver of automobile with aluminum engine block C-71
C.71 Cooking pot exposure geometry (cylindrical coordinates) (cm) C-72
C.72 Dose rates from aluminum cookware C-72
C.73 Dose rates from pile of concrete rubble C-73
C.74 Concrete truck driver exposure geometry (cm) C-74
C.75 Dose rates to concrete rubble truck driver C-74
C.76 Effective dose equivalent coefficients for steel scenarios–part 1 . . . . . C-76
C.77 Effective dose equivalent coefficients for steel scenarios–part 2 . . . . . C-78
C.78 Effective dose equivalent coefficients for steel scenarios–part 3 . . . . . C-80
C.79 Effective dose coefficients for external exposure in steel scenarios—part 1 . . . . . C-82
C.80 Effective dose coefficients for external exposure in steel scenarios—part 2 . . . . . C-84
C.81 Effective dose coefficients for external exposure in steel scenarios—part 3 . . . . . C-86
C.82 Effective dose equivalent coefficients for copper scenarios—part 1 . . . . . C-88
C.83 Effective dose equivalent coefficients for copper scenarios—part 2 . . . . . C-90
C.84 Effective dose coefficients for external exposure in copper scenarios—part 1 . . . . . C-92

Tables (continued)

Page
C.85 Effective dose coefficients for external exposure in copper scenarios—part 2 . . . . . C-94
C.86 Effective dose equivalent coefficients for aluminum scenarios C-96
C.87 Effective dose coefficients for external exposure in aluminum scenarios C-98
C.88 Dose coefficients for external exposure in concrete scenarios C-100

Figures

Page

C.1 Layout of baghouse modules C-12
C.2 Cross-sectional view of male anthropomorphic phantom C-19
C.3 Location of sources on the anthropomorphic phantoms C-21
C.4 Location of phantom in concrete-walled room C-21
C.5 Schematic of Heil Trailer International Super Jet Model 1040 aluminum dry bulk trailer + tractor C-24
C.6 Cross-section of Heil Dry Bulk Trailer C-28
C.7 Arrangement of I-beams (not to scale) C-33
C.8 Cross-section of steel stud(thickness not to scale) C-37
C.9 Floor plan of steel-studded house C-37
C.10 Engine block exposure geometry C-39
C.11 AOE-6 class fast combat support ship (starboard view) C-43
C.12 Schematic diagrams of ship model C-45
C.13 Typical arrangement of copper tubes—dimensions in cm C-59
C.14 Aluminum cooking pot C-71

C EXTERNAL EXPOSURE DOSE COEFFICIENTS

External exposure dose coefficients are calculated for each of 41 source geometries (many of which include two or more receptor locations) and for each of 112 of the 115 radionuclides addressed by the present analysis. The dose coefficients for 3 radionuclides—H-3, Ca-41, and Mn-53—are not assessed. H-3 (tritium) is an extremely weak **$**-emitter which produces a negligibly small external exposure. Ca-41 and Mn-43 decay by electron capture and emit low-energy x rays ($E_{(}$ < 10 keV) that are below the threshold for external exposure calculations in the present analysis.

C.1 Methodology

C.1.1 Radiation Transport Methods

The external exposure dose coefficients were calculated by means of the Los Alamos Monte Carlo code MCNP4C (LANL 2001). The code treats an arbitrary three-dimensional configuration of materials in geometric cells, and allows for the specification of complex geometries. Pointwise photo-atomic cross-section data are used. For photons, the detailed physics modeling takes account of coherent and incoherent scattering with form factors, the possibility of fluorescent emission after photoelectric absorption, absorption in pair production with local emission of annihilation radiation, and secondary bremsstrahlung. The code utilizes a collision cross-section library based on the Evaluated Nuclear Structure Data File (ENSDF), maintained by the Brookhaven National Laboratory.

MCNP4C was the latest version of this code at the time of these analyses. An earlier version was one of the radiation transport codes used to calculate the dose conversion coefficients presented in ICRP Publication 74 (ICRP 1996). ICRP found good agreement among the several different codes used for this publication, which constitutes a benchmark and helps justify the use of MCNP for the present analysis. Los Alamos National Laboratory has also conducted extensive benchmarking studies of this code.

A condensed-history electron physics model is invoked as needed to transport electrons down to a 1-keV cutoff. The model provides for the statistical treatment of energy straggling and angular deflections. Bremsstrahlung photons, impact ionization K-shell x rays, and delta-rays are produced and sampled during the electron's random walk. Version 4C incorporates the updated Sandia National Laboratory's Integrated Tiger Series electron physics, ITS 3.0. The MCNP4C code also provides a powerful general source, which allows for the specification of a complex distributed source term. A rich collection of variance reduction techniques is supported.

The model for each scenario is sufficiently detailed to take into account self-absorption in the source material matrix; transmission and attenuation by structural shielding; scatter from soil, pavement, and surrounding structures; and skyshine.

C.1.2 Calculational Methods

Performing photon fluence and external exposure dose assessments for 112 radionuclides, many of which have complex decay schemes as well as $-ray spectra, in about 100 source and receptor geometries, would require hundreds of thousands of separate calculations. To minimize this effort while still preserving the desired level of precision, we adopt the approach used by Eckerman and Ryman (1993) and calculate the dose rate from each of 12 monoenergetic photon sources uniformly distributed within the source material, with an emission rate of 1 photon per second per gram of material. In the ensuing discussion, the strength of these sources is referred to in Bq/g. These sources span the energy range of 10 keV to 5 MeV.[1]

All of the calculated fluence rates are converted to effective dose equivalent (EDE) rates using the fluence-to-dose conversion coefficients listed in ICRP Publication 51 (ICRP 1987, Table 2).[2] Log-log interpolation was used for intermediate energies. Effective dose rates are calculated in a similar manner, applying conversion coefficients in ICRP Publication 74 (ICRP 1996, Tables A.1 and A.17). These conversion coefficients are defined for five irradiation geometries:

- Anteroposterior (AP)
- Posteroanterior (PA)
- Lateral (LAT)
- Rotational (ROT)
- Isotropic (ISO)

The most appropriate exposure geometry is chosen for each scenario, as indicated in Sections C.2 – C.5.

C.1.2.1 Dose Coefficients for Individual Nuclides

The complete decay schemes of all the radionuclides in the present study have been compiled by the Tokai Research Establishment, JAERI (2001). Included are the energies and relative intensities of (rays, x rays, annihilation quanta, Auger electrons, internal conversion electrons, and spontaneous fission, as well as detailed $-ray spectra. A more complete description of these data files is presented in Section O2.2 of Volume 4. These data are used to calculate the dose coefficients for each nuclide in each exposure geometry, using the results of the MCNP calculations for 12 discrete photon energies, as described below.

For each photon radiation, four sets of MCNP results, two above and two below the energy of the given photon, are used to perform a log-log cubic spline interpolation. For photon energies near the ends of the range (< 15 keV or > 2 Mev), a quadratic log-log interpolation is performed

[1] The individual energies and the calculated dose rates are listed in Table C.3 and subsequent tables.

[2] This method was used for calculating all external exposure dose coefficients, except for the scenario that describes the exposure to a small metal object close to the body. The method used in those calculations is described in Section C.2.7.1.

by fitting a quadratic function to the logs of the three nearest energies. The dose contribution of each photon is multiplied by the intensity of that radiation and added to the dose contributions of all the other radiations from the given nuclide.

C.1.2.2 External Bremsstrahlung

When charged particles, such as electrons, are decelerated, a fraction of the kinetic energy is emitted as a continuous spectrum of x rays. Such radiation is called bremsstrahlung (German for "braking radiation"). External bremsstrahlung is produced when electrons are scattered in the surrounding medium and is strongly dependent on the atomic number of the medium.[3] In the present analysis, in which the activity is dispersed throughout the source material, the electrons would lose all of their energy within this medium. In such a case, bremsstrahlung can make a significant contribution to the dose from external exposure to radionuclides which emit energetic electrons, especially nuclides which emit no significant photon radiation. We calculate the external bremsstrahlung from each electron emitted by each radionuclide in each medium by the methodology described by Eckerman and Ryman (1993, Appendix C), utilizing the data on scaled bremsstrahlung spectra compiled by Dillman and Eckerman (Eckerman 2002).

The energies and intensities of Auger and internal conversion electrons are taken directly from JAERI 2001. JAERI divides the energy range of each **$** transition into a number of intervals of varying widths. The corresponding value of the probability density function—expressed as the number of **$** rays per MeV per decay—is listed for each energy interval. The **$** spectrum in the present analysis is characterized by assigning to the **$** rays in each energy interval an energy corresponding to the midpoint of that interval and an intensity corresponding to the product of the density function and the width of the interval in MeV. The entire spectrum of each **$** transition is thus included in the bremsstrahlung calculation.

A second set of calculations is performed for some **$** emitters that have no significant **(**-ray emission. MCNP is used in the coupled electron-photon mode[4] to calculate the dose coefficients for such nuclides, using the **$** spectra discussed above. However, Auger and internal conversion electrons are not included in these MCNP calculations. To ensure that no dose contributions are neglected, the dose coefficient for each individual radionuclides calculated by this method is compared to the coefficient calculated by the methodology described by Eckerman and Ryman, and the coefficient with the higher value is adopted for the analysis. In most cases, the two dose coefficients agree within a few percent. These calculations are discussed further in the following sections of this appendix.

[3] Internal bremsstrahlung is produced within the radioactive atom emitting the electron and makes a relatively insignificant contribution to external dose. It is neglected in the present study.

[4] A detailed discussion of the MCNP methodology is presented by Briesmeister (2000).

C.1.2.3 Variance Reduction

Point, ring, or volume detectors are used for all fluence calculations to improve scoring efficiency and provide for fine spatial resolution. Ring detectors are only employed in those scenarios that possessed rotational symmetry. Geometry splitting and Russian roulette techniques are used in some simulations to more efficiently control particle track populations.[4] For some of the simulations of photon energies below 30 keV, the thickness of the source term is constrained to several mean-free-paths (MFPs) in order to increase source particle sampling in the outer layers of the source material.

For scatter contributions from soil, pavement and skyshine, the air and soil volumes are constrained in thickness to provide at least 2 MFPs of scattering material at all energies. This is equivalent to 4 MFPs for photons that penetrate to a depth of 2 MFPs and then backscatter to the detector. This strategy accounts for almost all of the scatter contribution while greatly reducing the computing time per history. For most energies, the effective thickness of air and soil is optically thick.

In general, coherent scatter was turned off to improve point detector convergence—a procedure recommended by the MCNP code developers. Coherent scatter is unimportant for shielding applications, but because it is highly forward directed it can perturb tally convergence whenever the photon line of flight is aligned with a point-detector location.

Two additional strategies were used in conjunction with the **$**-decay analyses. To improve the sampling statistics, bremsstrahlung production was biased in such a way as to increase not only the total bremsstrahlung produced, but also in favor of higher energy photons. In this way, the penetrating portion of the x-ray spectrum was more efficiently sampled. Weighting factors were adjusted to compensate for the increased production, yielding a neutral (unbiased) result. In addition, the production of knock-on or delta-ray electrons was turned off to decrease the computing time per history. The delta rays have low energies and contribute essentially nothing to the total bremsstrahlung production.

C.1.2.4 Uncertainty

A single MCNP analysis incorporates uncertainty via the stochastic nature of radioactive decay and the interaction of radiation with matter. With adequate running time, the uncertainties from this source are minimal. Although the uncertainties for a very few very-low-energy photon sources with significant shielding, or for the MCNP calculations of **$** bremsstrahlung from individual nuclides using the coupled photon-electron mode, are as high as 50%, the vast majority of the analyses have uncertainties well under 1%. In cases where the photon tally or the calculated dose is too low to produce statistically meaningful results, such results are not reported.

The labor- and computation-intensive nature of the MCNP analyses does not lend itself to the thousands of runs that would be required for a comprehensive quantitative analysis of the uncertainty due to variability in the exposure geometry. Limited analyses of the effect of the

position of the exposed individual with respect to the source of radiation are performed for a number of scenarios, as discussed in the following sections of this appendix. These results are used to estimate the uncertainty parameter for external exposure (U_x). Values of U_x used in each exposure scenario are listed in Tables B.8 – B.11. For the same reason, uncertainties due to variability in the size, density, or chemical composition of the radiation source are not addressed in the present analysis. These parameters are assigned fixed values, which are addressed in the discussion of the various source geometries in the following sections of this appendix.

C.2 Steel Scenarios

As noted in Table 3.10 of the main report, the exposure scenarios for the steel scrap analysis included 19 source geometries, in addition to those presented by Eckerman and Ryman (1993). The analysis of the external exposure to these sources is discussed in the following sections. The results of the MCNP analyses are presented as part of the discussion of each exposure scenario.

The interaction of radiation with the source material and surrounding scattering media is strongly dependent on the elemental composition of these media. The composition of the materials in the steel scenarios is presented in Tables C.1 and C.2.

C.2.1 Scrap Pile

C.2.1.1 Exposure Geometry

Scrap piles observed by members of the project team during visits to scrap metal dealers vary widely in size and shape. A hemispherical pile was adopted for the present analysis. Such a pile has rotational symmetry; thus, a worker would receive the same dose regardless of his angular orientation with respect to the pile. Furthermore, a hemispherical pile is completely specified by only one dimension—e.g., the volume. Consequently, a hemisphere is the simplest and therefore the most generic shape.

The mass of the pile was based on the size of scrap piles at a large ferrous metal scrap dealer who was visited by SC&A personnel. The piles ranged from 1,000 to 6,000 tons. The mid-point of this range—3,500 tons—was adopted for this analysis. Bulk densities of ferrous scrap range from 16 to 22 lb/ft^3 prior to compaction.[5] Twenty pounds per cubic foot (0.32 g/cm^3) was adopted as the bulk density for the present analysis. The scrap is assumed to have the same elemental composition as SAE 1020, a common carbon steel alloy, as listed in Table C.1.

The volume and radius of the pile are calculated as follows:

[5] Roy Sheely, U.S. Department of Energy, Oak Ridge Reservation, private communication with Robert Anigstein, SC&A, Inc., November 14, 2001.

$$V = \frac{M}{\rho_b}$$

$= 350{,}000\ ft^3\ (9{,}911\ m^3)$

$M = 7{,}000\ lb\ (3{,}175\ kg)$

$\rho_b = 20\ lb/ft^3\ (320\ kg/m^3)$

The radius is calculated by solving the expression for the volume of a hemisphere:

$$V = \frac{2\pi r^3}{3}$$

$$r = \left(\frac{3V}{2\pi}\right)^{\frac{1}{3}} \qquad \textbf{C.1}$$

r = 55 ft (16.8 m)

Table C.1 Composition of materials in steel analysis (wt. fraction)

Element	Moist air	Soil	SAE 1020	Cast iron	Steel slag	Gypsum	Wood	EAF Dust	Bag-house[a]	Fiber-glass[b]
H	6.32e-04	0.021			0.004	0.333	0.060		0.0002	0.019
B									0.0103	0.030
C		0.016	0.002	0.030			0.507			0.189
N	0.751						0.002		0.2331	
O	0.235	0.577			0.344	0.500	0.426	0.281	0.3332	0.448
Na								0.012	0.0127	0.022
Mg					0.046			0.012	0.0052	
Al		0.050			0.025				0.0027	
Si		0.271		0.020	0.066			0.013	0.1025	0.284
P				7.5e-03	0.003					
S				1.5e-03	0.001	0.083	0.005			
Al										0.080
Cl								0.013	0.0055	
Ar	0.013								0.0040	
K		0.013								
Ca		0.041			0.290	0.083		0.109	0.0471	
Mn			0.007	0.007	0.037			0.036	0.0156	
Fe		0.011	0.991	0.934	0.184			0.387	0.1680	
Zn								0.138	0.0599	
ρ[c]	1.20e-03	1.6	7.86	d	2.0	0.66	0.55	1.72	3.61e-03	2.0

[a] EAF Baghouse interior: EAF dust + fiberglass + moist air

[b] Fiberglass-resin compound

[c] Density (g/cm^3), unless otherwise specified for individual exposure scenarios; bulk densities for aggregate materials such as soil, slag, and EAF dust

[d] See descriptions of engine blocks in Sections C.2.11 and C.2.12 for effective densities used in analysis

Table C.2 Concrete composition

Element	Atom density[a] (cm^{-3})	Atomic weight	Partial density[b] (g/cm^3)
H	7.86e+21	1.008	0.013
O	4.38e+22	16.00	1.164
Na	1.05e+21	22.99	0.040
Mg	1.40e+20	24.305	0.006
Al	2.39e+21	26.98	0.107
Si	1.58e+22	28.086	0.737
K	6.90e+20	39.098	0.045
Ca	2.92e+21	40.078	0.194
Fe	3.10e+20	55.85	0.029
Total			2.334

[a] American Nuclear Society 1987

[b] Partial density = atom density × AW ÷ N_A ($N_A = 6.02 \times 10^{23}$ atoms per mole)

Since the worker's orientation with respect to the pile may vary during the day, the rotational geometry (ROT) was adopted for the MCNP analysis. The most likely distance from the edge of the pile is assumed to be 2 m; however, the distance could vary from 1 m to 5 m. Eckerman and Ryman (1993) assumed that the average height of the body was 1 m above ground level; the same value was used for all exposure geometries in the present analysis in which the position of the receptor is not otherwise specified. The analysis included backscatter from soil and moist air.

C.2.1.2 Results of Analysis

The results of the analysis are presented in Table C.3. The dose rates from the 12 monoenergetic photon sources and from the bremsstrahlung from the **$** decay of 17 selected nuclides are computed by MCNP at distances of 100 cm and 500 cm from the edge of the pile. These represent the range of distances of the worker during the duration of his exposure and serve as the basis of determining the uncertainty parameter (U_x) for this exposure scenario.

To calculate the dose rate at 200 cm, the assumed likely position, we first calculate the distance and strength of a fictitious equivalent point source that would produce the same exposure rates at the same locations as those calculated for the real source. Applying the inverse square law, we obtain:

$$R(x) = \frac{A_o}{(x - x_o)^2} \qquad \textbf{C.2}$$

R(x) = exposure rate at distance *x* from real source

A_o = strength of equivalent point source

x_o = distance of equivalent point source from real source

To evaluate the constants A_o and x_o, we substitute the calculated values of R(x) at two distances:

$$R_1 = \frac{A_o}{(x_1 - x_o)^2}$$

$$R_2 = \frac{A_o}{(x_2 - x_o)^2} \qquad \textbf{C.3}$$

Solving Equations C.3, we obtain:

$$A_o = R_1 (x_1 - x_o)^2$$

$$x_o = \frac{x_1 R_1^{½} - x_2 R_2^{½}}{R_1^{½} - R_2^{½}} \qquad \textbf{C.4}$$

Substituting the expressions for A_o and x_o from Equations C.4 into Equation C.2 allows us to calculate the dose rate at a distance of 200 cm. The values of x_o and A_o for each of the 12 monoenergetic photon sources and 17 **$**-emitting nuclides are listed in Table C.3, along with the calculated dose rates at 200 cm. The uncertainty parameter, U_x, is calculated as follows:

$$U_x = 1 \pm \overline{C_v}$$

$$\overline{C_v} = \frac{\sum_i^n \frac{\sigma_{Di}}{R(x)_i}}{n} \qquad \textbf{C.5}$$

$\overline{C_v}$ = average coefficient of variation[6]
= 0.64 (pile of steel scrap)

F_{Di} = standard deviation of two MCNP-calculated dose rates (i.e., at 100 and 500 cm) from source *i*

R(x) = dose rate from source *i* at distance *x* (i.e., 200 cm), calculated by Equations C.2 – C.4

n = number of sources analyzed by MCNP for this scenario
= 29

As shown in Table B.8, U_x for the scrap pile is assigned a uniform distribution: 0.4 # U_x # 1.6.

[6] The term "coefficient of variation" is given an expanded meaning in the present context. According to the usual definition, $C_v = \frac{\sigma_D}{\mu}$, where **:** = mean of the values. R(x) is a derived quantity that is not equal to the mean.

Table C.3 Dose rates from pile of steel scrap

Energy (MeV) or nuclide	Effective dose equivalent (Sv/s per Bq/g)						Effective dose (Sv/s per Bq/g)					
	100 cm	500 cm	x_o (cm)	A_o	200 cm	C_v[a]	100 cm	500 cm	x_o (cm)	A_o	200 cm	C_v[a]
0.010	1.98e-17	5.15e-19	23.08	1.17e-13	3.74e-18	3.64	1.65e-17	4.30e-19	23.00	9.78e-14	3.12e-18	3.64
0.015	2.61e-16	4.82e-17	-201.43	2.37e-11	1.47e-16	1.02	1.76e-16	3.24e-17	-200.60	1.59e-11	9.91e-17	1.02
0.020	1.09e-15	3.18e-16	-369.82	2.41e-10	7.41e-16	0.74	7.71e-16	2.24e-16	-367.70	1.69e-10	5.23e-16	0.74
0.030	6.14e-15	2.28e-15	-523.99	2.39e-09	4.56e-15	0.60	5.07e-15	1.88e-15	-522.86	1.97e-09	3.76e-15	0.60
0.050	3.96e-14	1.69e-14	-653.65	2.25e-08	3.09e-14	0.52	3.79e-14	1.61e-14	-648.66	2.12e-08	2.95e-14	0.52
0.070	1.28e-13	5.66e-14	-693.93	8.07e-08	1.01e-13	0.50	1.30e-13	5.73e-14	-690.14	8.12e-08	1.02e-13	0.50
0.100	4.23e-13	1.91e-13	-719.38	2.84e-07	3.36e-13	0.49	4.23e-13	1.91e-13	-719.38	2.84e-07	3.36e-13	0.49
0.200	2.66e-12	1.21e-12	-728.70	1.83e-06	2.12e-12	0.48	2.66e-12	1.20e-12	-718.25	1.78e-06	2.11e-12	0.49
0.500	1.21e-11	5.40e-12	-704.97	7.84e-06	9.57e-12	0.49	1.20e-11	5.36e-12	-706.02	7.80e-06	9.50e-12	0.49
1.0	2.86e-11	1.28e-11	-708.44	1.87e-05	2.27e-11	0.49	2.84e-11	1.26e-11	-697.89	1.81e-05	2.24e-11	0.50
2.0	6.22e-11	2.77e-11	-702.42	4.00e-05	4.92e-11	0.50	6.21e-11	2.76e-11	-700.00	3.97e-05	4.91e-11	0.50
5.0	1.43e-10	6.41e-11	-710.35	9.39e-05	1.13e-10	0.49	1.43e-10	6.40e-11	-708.44	9.35e-05	1.13e-10	0.49
C-14	4.60e-17	1.90e-17	-619.46	2.38e-11	3.55e-17	0.54	4.42e-17	1.83e-17	-621.86	2.30e-11	3.41e-17	0.54
P-32	1.21e-13	5.38e-14	-700.50	7.75e-08	9.56e-14	0.50	1.21e-13	5.35e-14	-693.83	7.62e-08	9.54e-14	0.50
S-35	4.57e-17	2.09e-17	-735.57	3.19e-11	3.65e-17	0.48	4.43e-17	2.03e-17	-738.14	3.11e-11	3.54e-17	0.48
Cl-36	1.35e-14	6.07e-15	-714.12	8.95e-09	1.07e-14	0.49	1.35e-14	6.06e-15	-712.09	8.90e-09	1.07e-14	0.49
Ca-45	2.90e-16	1.32e-16	-729.50	2.00e-10	2.31e-16	0.48	2.88e-16	1.30e-16	-718.97	1.93e-10	2.29e-16	0.49
Sr-89	9.15e-14	4.23e-14	-749.70	6.61e-08	7.32e-14	0.48	9.11e-14	4.21e-14	-749.22	6.57e-08	7.29e-14	0.48
Sr-90	5.08e-15	2.32e-15	-733.77	3.53e-09	4.05e-15	0.48	5.07e-15	2.32e-15	-736.31	3.55e-09	4.04e-15	0.48
Y-90	2.61e-13	1.14e-13	-679.57	1.59e-07	2.05e-13	0.51	2.59e-13	1.14e-13	-688.50	1.61e-07	2.04e-13	0.50
Y-91	9.73e-14	4.48e-14	-744.37	6.94e-08	7.78e-14	0.48	9.69e-14	4.47e-14	-746.85	6.95e-08	7.75e-14	0.48
Tc-99	6.64e-16	3.04e-16	-736.98	4.65e-10	5.30e-16	0.48	6.59e-16	3.03e-16	-742.53	4.68e-10	5.27e-16	0.48
Cs-135	4.56e-16	2.04e-16	-707.93	2.98e-10	3.61e-16	0.49	4.52e-16	2.02e-16	-706.66	2.94e-10	3.58e-16	0.49
Pm-147	1.58e-16	6.92e-17	-682.72	9.68e-11	1.24e-16	0.51	1.56e-16	6.83e-17	-682.31	9.55e-11	1.23e-16	0.51
Sm-151	1.57e-18	6.33e-19	-595.80	7.60e-13	1.20e-18	0.55	1.33e-18	5.42e-19	-606.11	6.63e-13	1.02e-18	0.55
Tm-171	3.35e-18	1.59e-18	-785.89	2.63e-12	2.70e-18	0.46	3.01e-18	1.42e-18	-777.34	2.32e-12	2.43e-18	0.46
W-185	1.83e-15	8.13e-16	-699.51	1.17e-09	1.45e-15	0.50	1.82e-15	8.10e-16	-701.65	1.17e-09	1.44e-15	0.50
Tl-204	1.23e-14	5.18e-15	-639.44	6.73e-09	9.54e-15	0.53	1.22e-14	5.17e-15	-646.05	6.79e-09	9.49e-15	0.52
Bk-249	1.19e-17	5.20e-18	-680.08	7.24e-12	9.35e-18	0.51	1.10e-17	4.85e-18	-690.51	6.87e-12	8.67e-18	0.50
Average						0.64						0.64

[a] Coefficient of variation—see text

C.2.2 Slag Pile

The analysis of the slag pile is modeled after that of the scrap pile described in Section C.2.1.1. Only the features that are unique to the slag pile are described here.

The mass of the slag pile is assumed to be 20 kt, as discussed in Section 3.7.1.7 in the main report. The bulk density is 2 g/cm^3,[7] resulting in a volume of 10,000 m^3. The radius, as calculated by Equation C.1, is 16.8 m. The elemental composition of slag is listed in Table C.1.

The results of the slag pile analysis are presented in Table C.4. The dose rates from the 12 monoenergetic photon sources and from the bremsstrahlung from the $ decay of 13 selected nuclides are computed by MCNP at distances of 100 cm and 500 cm from the edge of the pile. These 13 nuclides are isotopes of elements that partition strongly to steel slag. The results presented in Table C.4 are calculated in the same manner as the results of the scrap pile analysis discussed in Section C.2.1.2. As shown in this table, the values of C_v for the photon energies of 10 and 15 keV are considerably higher than for the other sources. Photons in this low-energy range make only minor contributions to the dose coefficients of most of the radionuclides in the present analysis. Including these C_v values in calculating $\overline{C_v}$ would bias the uncertainty analysis. Consequently, these two values are omitted in this calculation. Based on these results, U_x for processing steel slag is assigned a uniform distribution: 0.6 # U_x # 1.4.

C.2.3 Dust Pile

The analysis of the dust pile is modeled after that of the scrap pile described in Section C.2.1.1. Only the features that are unique to the dust pile are described here.

The mass of the dust pile is assumed to be 8,000 tons (7,258 t), as discussed in Section 3.7.1.6 in the main report. The bulk density is 1.72 g/cm^3 (Logan 1993, p. 9). The resulting volume is 4,200 m^3. The radius, as calculated by Equation C.1, is 12.63 m. The elemental composition of EAF dust, listed in Table C.1, is based on data presented by McKenzie-Carter et al. (1995), as cited in Section J.1.5 of Volume 4 of the present report.

The results of the dust pile analysis are presented in Tables C.5 and C.6. The dose rates from the 12 monoenergetic photon sources and from the bremsstrahlung from the $ decay of 3 selected nuclides are computed by MCNP at distances of 100 cm and 500 cm from the edge of the pile. These 3 nuclides are among the isotopes of elements that partition strongly to EAF dust.

The results presented in Tables C.5 and C.6 are calculated in the same manner as the results of the scrap pile analysis discussed in Section C.2.1.2. However, a simpler approach was used to evaluate the uncertainty parameter, U_x. For each photon source or nuclide listed in the tables, the difference between dose rates at 100 cm and 200 cm is listed in the column marked $)_1$. Similarly, the difference between the 200-cm and 500-cm dose rates is listed under $)_2$. The average of these two values, divided by the 200-cm dose rate, is listed under $\frac{\overline{\Delta}}{R(200)}$. The values of $\frac{\overline{\Delta}}{R(200)}$ for the 3 photon energies in the range of 10 – 20 keV are considerably higher than for the other sources. Since, as was discussed in Section C.2.2, photons in this low-energy range

[7] Rick West, Sales Manager, International Mill Services, private communication with William C. Thurber, SC&A, Inc., August 22, 1996.

make only minor contributions to the dose coefficients of most of the radionuclides in the present analysis, these values are omitted in the calculation of the average $\frac{\overline{\Delta}}{R(200)}$, listed at the bottom of the last column. Based on these results, U_x for EAF dust processing is assigned a uniform distribution: 0.6 # U_x # 1.4.

Table C.4 Dose rates from pile of steel slag

Energy (MeV) or nuclide	Effective dose equivalent (Sv/s per Bq/g)						Effective dose (Sv/s per Bq/g)					
	100 cm	500 cm	x_o (cm)	A_o	200 cm	C_v[a]	100 cm	500 cm	x_o (cm)	A_o	200 cm	C_v[a]
0.010	5.07e-17	1.23e-18	26.20	2.76e-13	9.14e-18	2.71	4.23E-17	1.03E-18	26.04	2.31e-13	7.65e-18	2.70
0.015	7.10e-16	1.21e-16	-181.23	5.62e-11	3.86e-16	0.76	4.78E-16	8.15E-17	-181.34	3.78e-11	2.60e-16	0.76
0.020	2.92e-15	8.48e-16	-367.49	6.38e-10	1.98e-15	0.52	2.06E-15	5.97E-16	-366.43	4.48e-10	1.40e-15	0.52
0.030	1.60e-14	6.16e-15	-553.97	6.84e-09	1.20e-14	0.41	1.33E-14	5.08E-15	-547.19	5.57e-09	9.98e-15	0.41
0.050	1.02e-13	4.33e-14	-647.92	5.71e-08	7.94e-14	0.37	9.70E-14	4.12E-14	-648.51	5.43e-08	7.55e-14	0.37
0.070	2.99e-13	1.32e-13	-692.01	1.88e-07	2.36e-13	0.35	3.04E-13	1.34E-13	-690.19	1.90e-07	2.40e-13	0.35
0.100	8.40e-13	3.75e-13	-705.38	5.45e-07	6.65e-13	0.35	8.41E-13	3.76E-13	-707.17	5.48e-07	6.66e-13	0.35
0.200	3.64e-12	1.61e-12	-694.25	2.30e-06	2.87e-12	0.35	3.64E-12	1.61E-12	-694.25	2.30e-06	2.87e-12	0.35
0.500	1.32e-11	5.73e-12	-672.53	7.88e-06	1.03e-11	0.36	1.31E-11	5.68E-12	-671.21	7.79e-06	1.03e-11	0.36
1.0	3.03e-11	1.29e-11	-651.04	1.71e-05	2.36e-11	0.37	3.01E-11	1.28E-11	-649.79	1.69e-05	2.34e-11	0.37
2.0	6.75e-11	2.77e-11	-612.97	3.43e-05	5.19e-11	0.38	6.74E-11	2.77E-11	-614.44	3.44e-05	5.19e-11	0.38
5.0	1.70e-10	6.98e-11	-613.50	8.65e-05	1.31e-10	0.38	1.70E-10	6.97E-11	-612.08	8.62e-05	1.31e-10	0.38
P-32	8.71e-14	3.67e-14	-639.99	4.77e-08	6.76e-14	0.37	8.68E-14	3.65E-14	-637.87	4.73e-08	6.73e-14	0.37
S-35	4.69e-17	2.15e-17	-738.65	3.30e-11	3.74e-17	0.34	4.40E-17	2.03E-17	-747.03	3.16e-11	3.52e-17	0.34
Cl-36	9.41e-15	4.27e-15	-725.59	6.41e-09	7.49e-15	0.34	9.38E-15	4.25E-15	-723.69	6.36e-09	7.46e-15	0.34
Ca-45	2.91e-16	1.61e-16	-1061.4	3.93e-10	2.47e-16	0.26	2.87E-16	1.58E-16	-1050.2	3.80e-10	2.43e-16	0.27
Sr-89	6.27e-14	2.78e-14	-697.13	3.98e-08	4.95e-14	0.35	6.25E-14	2.77E-14	-696.65	3.97e-08	4.93e-14	0.35
Sr-90	4.31e-15	1.86e-15	-665.94	2.53e-09	3.37e-15	0.36	4.29E-15	1.85E-15	-665.11	2.51e-09	3.36e-15	0.36
Y-90	1.79e-13	7.34e-14	-612.21	9.08e-08	1.38e-13	0.38	1.79E-13	7.31E-14	-608.18	8.98e-08	1.37e-13	0.39
Y-91	7.32e-14	3.25e-14	-698.77	4.67e-08	5.78e-14	0.35	7.29E-14	3.23E-14	-696.31	4.62e-08	5.75e-14	0.35
Cs-135	5.32e-16	2.08e-16	-567.47	2.37e-10	4.02e-16	0.40	5.27E-16	2.05E-16	-562.97	2.32e-10	3.98e-16	0.40
Pm-147	1.62e-16	7.97e-17	-839.63	1.43e-10	1.32e-16	0.31	1.59E-16	7.81E-17	-837.14	1.40e-10	1.30e-16	0.31
Sm-151	1.81e-18	6.52e-19	-500.46	6.53e-13	1.33e-18	0.44	1.54E-18	5.55E-19	-500.81	5.56e-13	1.13e-18	0.44
Tm-170	1.54e-14	6.98e-15	-724.13	1.05e-08	1.22e-14	0.34	1.54e-14	6.96E-15	-720.52	1.04e-08	1.22e-14	0.34
Bk-249	1.24e-17	5.00e-18	-595.89	6.00e-12	9.48e-18	0.39	1.13E-17	4.60E-18	-605.06	5.62e-12	8.67e-18	0.39
Average[b]						0.37						0.37

[a] Coefficient of variation—see text

[b] Omits 0.010 and 0.015 MeV values—see text

C.2.4 Baghouse

The baghouse consists of 10 modules arranged in two rows of 5 modules each; each module is 15 ft × 15 ft × 30 ft high (~4.6 × 4.6 × 9.1 m) (see Figure C.1). Each module contains 66 fiberglass filters, each weighing 5.9 lb (2.67 kg) and containing 10 lb (4.54 kg) of EAF dust. Each module thus contains 176.6 kg of fiberglass (2.67 × 66 = 176.6) and 299 kg of dust,

uniformly mixed and distributed throughout its volume. The radiation sources are assumed to be uniformly distributed throughout the dust.

In the case of the bremsstrahlung calculation for Pb-210, a low-energy **$** emitter, only the radiation sources in module I4, the module containing the tally points, are included in the calculations. Contributions from radiation sources outside this module would be effectively shielded by the ½-inch-thick (1.2-cm) interior steel partitions.

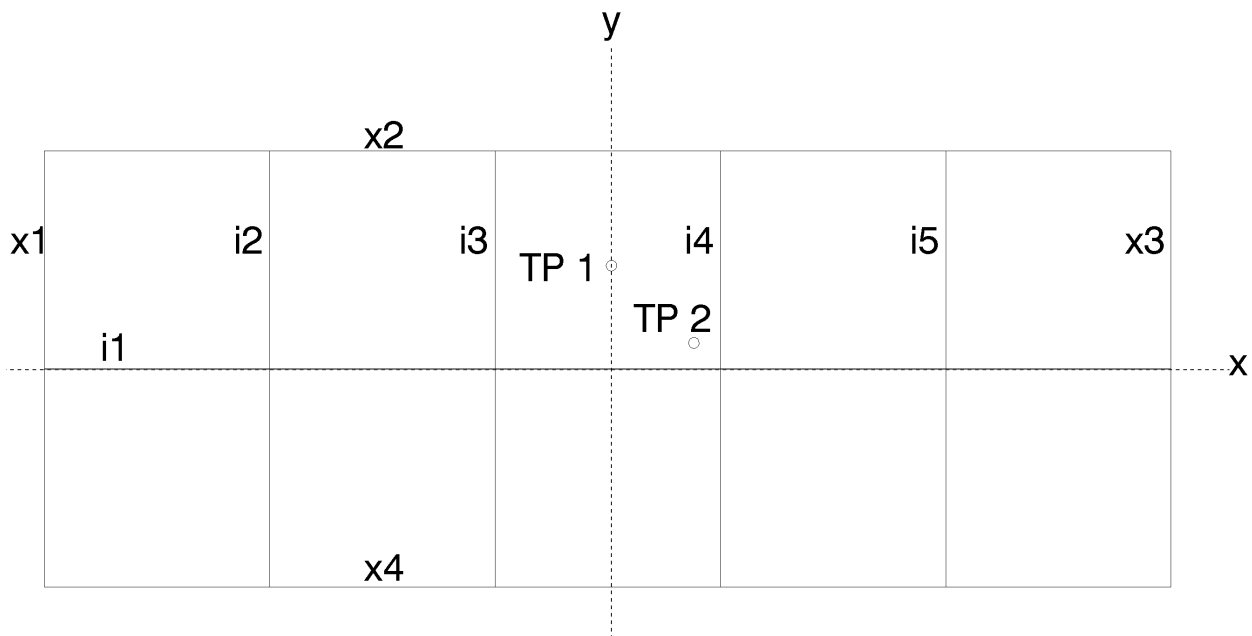

Figure C.1 Layout of baghouse modules

C.2.5 Large Metal Object

The large generic metal object is a SAE 1020 steel cylindrical shell with activity uniformly distributed throughout the metal. The right circular cylinder, which stands upright in the center of a room, is 1.7 m high with an inner radius of 29.2 cm and an outer radius of 30 cm. To maintain rotational symmetry, the room is modeled as a 3-m-high right circular cylinder with a radius of 5 m. The walls, floor, and ceiling are concrete which is optically thick, as discussed in Section C.1.2.3. The MCNP analysis employs a ring detector to take advantage of the rotational symmetry. Tally locations are distances of 100, 200, and 300 cm from the outer surface of the steel cylinder, at a height of 100 cm above the floor. For photon energies # 100 keV, the room is filled with moist air. Rotational irradiation geometry is assumed in the MCNP dose calculations.

Table C.5 Effective dose equivalent rates from pile of EAF dust (Sv/s per Bq/g)

Energy (MeV) or nuclide	100 cm	500 cm	x_o (cm)	A_o	200 cm	$)_1$	$)_2$	$\frac{\bar{\Delta}}{R(200)}$ [a]
0.010	2.71e-17	6.66e-19	25.64	1.50e-13	4.93e-18	2.22e-17	4.26e-18	2.68
0.015	3.57e-16	5.92e-17	-174.78	2.70e-11	1.92e-16	1.65e-16	1.33e-16	0.78
0.020	1.49e-15	3.96e-16	-325.65	2.70e-10	9.77e-16	5.13e-16	5.81e-16	0.56
0.030	8.30e-15	2.81e-15	-456.60	2.57e-09	5.96e-15	2.34e-15	3.15e-15	0.46
0.050	5.23e-14	2.00e-14	-548.20	2.20e-08	3.93e-14	1.30e-14	1.93e-14	0.41
0.07	1.64e-13	6.46e-14	-574.16	7.45e-08	1.24e-13	3.96e-14	5.98e-14	0.40
0.100	5.15e-13	2.06e-13	-588.30	2.44e-07	3.93e-13	1.22e-13	1.87e-13	0.39
0.200	2.84e-12	1.12e-12	-575.23	1.29e-06	2.15e-12	6.85e-13	1.03e-12	0.40
0.500	1.20e-11	4.62e-12	-553.97	5.13e-06	9.03e-12	2.97e-12	4.41e-12	0.41
1.0	2.84e-11	1.07e-11	-535.75	1.15e-05	2.12e-11	7.20e-12	1.05e-11	0.42
2.0	6.26e-11	2.34e-11	-529.32	2.48e-05	4.66e-11	1.60e-11	2.32e-11	0.42
5.0	1.54e-10	5.73e-11	-525.59	6.03e-05	1.14e-10	3.95e-11	5.72e-11	0.42
Cl-36	1.02e-14	4.05e-15	-581.45	4.74e-09	7.76e-15	2.44e-15	3.71e-15	0.40
Cs-135	3.94e-16	1.66e-16	-639.90	2.16e-10	3.06e-16	8.82e-17	1.40e-16	0.37
Pb-210	3.22e-17	1.07e-17	-444.41	9.54e-12	2.30e-17	9.22e-18	1.23e-17	0.47
Average[b]								0.41

[a] Average deviation—see text

[b] Omits 0.010 – 0.020 MeV values—see text

Table C.6 Effective dose rates from pile of EAF dust (Sv/s per Bq/g)

Energy (MeV) or nuclide	100 cm	500 cm	x_o (cm)	A_o	200 cm	$)_{left}$	$)_{right}$	$\frac{\bar{\Delta}}{R(200)}$ [a]
0.010	2.26e-17	5.56e-19	25.59	1.25e-13	4.11e-18	1.85e-17	3.56e-18	2.68
0.015	2.40e-16	3.99e-17	-175.38	1.82e-11	1.29e-16	1.11e-16	8.93e-17	0.78
0.020	1.05e-15	2.79e-16	-325.55	1.90e-10	6.88e-16	3.62e-16	4.09e-16	0.56
0.030	6.86e-15	2.31e-15	-453.04	2.10e-09	4.92e-15	1.94e-15	2.61e-15	0.46
0.050	5.00e-14	1.90e-14	-542.87	2.07e-08	3.74e-14	1.26e-14	1.84e-14	0.41
0.070	1.68e-13	6.55e-14	-564.98	7.43e-08	1.27e-13	4.11e-14	6.14e-14	0.40
0.100	5.15e-13	2.06e-13	-588.30	2.44e-07	3.93e-13	1.22e-13	1.87e-13	0.39
0.200	2.84e-12	1.12e-12	-575.23	1.29e-06	2.15e-12	6.85e-13	1.03e-12	0.40
0.500	1.19e-11	4.58e-12	-553.69	5.09e-06	8.95e-12	2.95e-12	4.37e-12	0.41
1.0	2.82e-11	1.06e-11	-533.85	1.13e-05	2.10e-11	7.16e-12	1.04e-11	0.42
2.0	6.26e-11	2.33e-11	-525.87	2.45e-05	4.65e-11	1.61e-11	2.32e-11	0.42
5.0	1.54e-10	5.72e-11	-524.20	6.00e-05	1.14e-10	3.96e-11	5.72e-11	0.42
Cl-36	1.02e-14	4.04e-15	-579.18	4.71e-09	7.75e-15	2.45e-15	3.71e-15	0.40
Cs-135	3.91e-16	1.64e-16	-635.20	2.11e-10	3.03e-16	8.80e-17	1.39e-16	0.38
Pb-210	2.58e-17	8.75e-18	-457.77	8.03e-12	1.86e-17	7.25e-18	9.80e-18	0.46
Average[b]								0.41

[a] Average deviation—see text

[b] Omits 0.010 – 0.020 MeV values—see text

Table C.7 Baghouse geometry (cm)

Location		Thickness	X		Y		Z	
			Min	Max	Min	Max	Min	Max
Inner wall (i1 - i5)	1	1.3	-1145.5	1145.5	-0.6	0.6	0.0	914.4
	2	1.3	-687.7	-686.4	-457.8	457.8	0.0	914.4
	3	1.3	-229.9	-228.6	-457.8	457.8	0.0	914.4
	4	1.3	228.6	229.9	-457.8	457.8	0.0	914.4
	5	1.3	686.4	687.7	-457.8	457.8	0.0	914.4
Outer wall (x1 - x4)	1	0.6	-1145.5	1145.5	229.2	229.9	0.0	914.4
	2	0.6	-1145.5	1145.5	-229.9	-229.2	0.0	914.4
	3	0.6	-1146.2	-1145.5	-458.5	458.5	0.0	914.4
	4	0.6	1145.5	1146.2	-458.5	458.5	0.0	914.4
Ceiling		0.6	-1146.2	1146.2	-458.5	458.5	914.4	915.0
Floor		0.6	-1146.2	1146.2	-458.5	458.5	-0.6	0.0
Concrete slab		30.5	-4	4	-4	4	-731.5	-701.0
Tally points (TP)		1	0.0		229.2		100	
		2	128.6		100.6			

Table C.8 Dose rates in baghouse

Energy (MeV) or nuclide	Effective dose equivalent (Sv/s per Bq/g)[a]				Effective dose (Sv/s per Bq/g)[a]			
	TP 1	TP 2	Ave.	C_v[b]	TP 1	TP 2	Ave.	C_v[b]
0.010	2.08e-16	2.11e-16	2.10e-16	0.010	1.90e-16	1.93e-16	1.92e-16	0.011
0.015	1.36e-15	1.38e-15	1.37e-15	0.010	9.28e-16	9.37e-16	9.33e-16	0.007
0.020	4.83e-15	4.84e-15	4.84e-15	0.001	3.23e-15	3.24e-15	3.24e-15	0.002
0.030	2.09e-14	1.90e-14	2.00e-14	0.067	1.56e-14	1.42e-14	1.49e-14	0.066
0.050	5.93e-14	5.05e-14	5.49e-14	0.113	5.42e-14	4.62e-14	5.02e-14	0.113
0.070	8.80e-14	7.50e-14	8.15e-14	0.113	8.42e-14	7.18e-14	7.80e-14	0.112
0.100	1.29e-13	1.12e-13	1.21e-13	0.100	1.26e-13	1.09e-13	1.18e-13	0.102
0.200	3.45e-13	3.13e-13	3.29e-13	0.069	3.34e-13	3.03e-13	3.19e-13	0.069
0.500	1.08e-12	1.02e-12	1.05e-12	0.040	1.05e-12	9.99e-13	1.02e-12	0.035
1.0	2.21e-12	2.13e-12	2.17e-12	0.026	2.17e-12	2.09e-12	2.13e-12	0.027
2.0	4.13e-12	4.02e-12	4.08e-12	0.019	4.07e-12	3.96e-12	4.02e-12	0.019
5.0	8.61e-12	8.47e-12	8.54e-12	0.012	8.42e-12	8.28e-12	8.35e-12	0.012
Cl-36	1.30e-15	1.13e-15	1.22e-15	0.099	1.22e-15	1.06e-15	1.14e-15	0.099
Cs-135	1.13e-16	9.77e-17	1.05e-16	0.103	1.01e-16	8.70e-17	9.40e-17	0.105
Pb-210	1.48e-19	1.32e-19	1.40e-19	0.081	1.12e-19	9.97e-20	1.06e-19	0.082
Average				0.058				0.057

[a] Normalized to 1 Bq/g in dust

[b] Coefficient of variation

The results of the analysis are presented in Tables C.9 and C.10. The dose rates from the 12 monoenergetic photon sources are computed by MCNP at the three location described above. The coefficient of variation is calculated in the conventional manner, based on the mean and

standard deviation at each location. The values of C_v for the 3 photon sources with the lowest energies are considerably higher than for the other sources. Since, as was discussed in Section C.2.2, photons in this low-energy range make only minor contributions to the dose coefficients of most of the radionuclides in the present analysis, $\overline{C_v}$ is calculated on the basis of the 9 sources, E $ 30 keV. Based on these results, U_x for the large metal object is assigned a uniform distribution: 0.2 # U_x # 1.8.

Table C.9 Dose rates from large metal object

Energy (MeV)	Effective dose equivalent (Sv/s per Bq/g)				Effective dose (Sv/s per Bq/g)			
	100 cm	200 cm	300 cm	C_V[a]	100 cm	200 cm	300 cm	C_V[a]
0.010	4.69e-18	8.57e-19	2.37e-19	1.25	3.92e-18	7.15e-19	1.98e-19	1.25
0.015	4.97e-17	1.46e-17	6.10e-18	0.98	3.35e-17	9.80e-18	4.10e-18	0.99
0.020	1.93e-16	6.24e-17	2.87e-17	0.92	1.36e-16	4.40e-17	2.02e-17	0.92
0.030	1.01e-15	3.44e-16	1.67e-16	0.88	8.33e-16	2.85e-16	1.38e-16	0.87
0.050	6.40e-15	2.31e-15	1.18e-15	0.83	6.14e-15	2.21e-15	1.13e-15	0.83
0.070	2.09e-14	7.83e-15	4.17e-15	0.80	2.14e-14	7.98e-15	4.23e-15	0.81
0.100	6.98e-14	2.70e-14	1.48e-14	0.78	6.98e-14	2.70e-14	1.49e-14	0.77
0.200	3.70e-13	1.43e-13	7.91e-14	0.77	3.70e-13	1.43e-13	7.91e-14	0.77
0.500	1.27e-12	4.73e-13	2.54e-13	0.80	1.25e-12	4.68e-13	2.52e-13	0.80
1.0	2.50e-12	9.05e-13	4.74e-13	0.83	2.48e-12	8.97e-13	4.70e-13	0.83
2.0	4.51e-12	1.60e-12	8.19e-13	0.84	4.52e-12	1.60e-12	8.19e-13	0.84
5.0	9.10e-12	3.17e-12	1.60e-12	0.86	9.09e-12	3.17e-12	1.60e-12	0.86
Average[b]				0.82				0.82

[a] Coefficient of variation

[b] Omits 0.010 – 0.020 MeV values—see text

The bremsstrahlung from the six **$**-emitting nuclides listed in Table C.10 is calculated only at the nominal average position of the exposed individual, 200 cm from the outer surface of the cylinder. These six nuclides are isotopes of elements that partition strongly to the molten steel.

Table C.10 Large metal object–$ bremsstrahlung (Sv/s per Bq/g)

Nuclide	EDE	Effective dose
C-14	3.05e-18	2.95e-18
P-32	5.76e-15	5.73e-15
S-35	3.17e-18	3.07e-18
Tc-99	4.08e-17	4.05e-17
W-185	1.02e-16	1.02e-16
Tl-204	6.22e-16	6.20e-16

Note: distance = 200 cm

C.2.6 Small Metal Object

The small generic metal object is a hollow steel sphere with activity uniformly distributed throughout the metal. The spherical shell has an inner radius of 12.24 cm and an outer radius of 13 cm. It is located in the center of a concrete room, the center of the sphere being 100 cm above the floor. The room is modeled as a 2.5-m-high right circular cylinder with a 4-m radius. The materials of the sphere and the room are the same as for the large metal object scenario described in Section C.2.5. The tally locations are 100, 200, and 300 cm from the center of sphere, at a height of 100 cm above the floor.

The results of the analysis are presented in Tables C.11 and C.12. The dose rates from the 12 monoenergetic photon sources are computed by MCNP at the three location described above. Because of the large variation of dose rate with distance, U_x is assigned a specially constructed distribution. By fitting parameters to the data, we derive the following Crystal Ball distribution: $U_x = 0.1 + 9.9 \times \text{Beta}(\mathbf{"}, \mathbf{\$}, s)$, with $\mathbf{"} = 0.577$, $\mathbf{\$} = 5.77$, $s = 1$.

Table C.11 Dose rates from small metal object

Energy (MeV)	Effective dose equivalent (Sv/s per Bq/g)			Effective dose (Sv/s per Bq/g)		
	100 cm	200 cm	300 cm	100 cm	200 cm	300 cm
0.010	5.10e-19	6.56e-20	1.63e-20	4.26e-19	5.47e-20	1.36e-20
0.015	4.78e-18	1.01e-18	3.83e-19	3.22e-18	6.82e-19	2.58e-19
0.020	1.81e-17	4.27e-18	1.78e-18	1.27e-17	3.01e-18	1.25e-18
0.030	9.33e-17	2.34e-17	1.03e-17	7.73e-17	1.93e-17	8.54e-18
0.050	5.92e-16	1.58e-16	7.44e-17	5.67e-16	1.51e-16	7.11e-17
0.070	1.92e-15	5.44e-16	2.68e-16	1.97e-15	5.53e-16	2.71e-16
0.100	6.48e-15	1.91e-15	9.75e-16	6.48e-15	1.91e-15	9.77e-16
0.200	3.57e-14	1.06e-14	5.57e-15	3.57e-14	1.06e-14	5.57e-15
0.500	1.27e-13	3.57e-14	1.79e-14	1.26e-13	3.54e-14	1.78e-14
1.0	2.59e-13	6.92e-14	3.34e-14	2.56e-13	6.86e-14	3.31e-14
2.0	4.78e-13	1.24e-13	5.81e-14	4.78e-13	1.24e-13	5.81e-14
5.0	9.79e-13	2.50e-13	1.14e-13	9.78e-13	2.50e-13	1.14e-13

Table C.12 Small metal object–$ bremsstrahlung

Nuclide	EDE (Sv/s per Bq/g)	Effective dose (Sv/s per Bq/g)
C-14	2.11e-19	2.04e-19
P-32	4.22e-16	4.20e-16
S-35	2.31e-19	2.22e-19
Tc-99	2.90e-18	2.88e-18
W-185	7.33e-18	7.30e-18
Tl-204	4.53e-17	4.52e-17

Note: distance = 200 cm

C.2.7 Small Object Next to Body

The exposure to a metal object directly on or next to the skin cannot be modeled by applying the fluence-to-dose conversion coefficients used in the other scenarios. These coefficients were derived for a plane wave of incident photons, and would produce highly distorted results for such an intimate geometry. Therefore this scenario was modeled by means of anthropomorphic phantoms—mathematical models that allow MCNP to directly calculate the doses to the various organs of the human body. These doses are then combined, using the appropriate weighting factors, to derive the doses to the whole body.

C.2.7.1 Analytical Approach

Effective dose equivalents and effective doses are calculated for a source placed at three different locations on male and female anthropomorphic phantoms. The objective is to find the one location which gives the maximum dose. The calculations are performed for the 12 discrete photon energies at all three locations. Effective dose equivalent and effective dose are calculated for 8 **$**-emitting nuclides at the source location that yielded the highest dose from the photon calculations.

Dosimetric Quantities

The effective dose equivalent (H_E) is defined as the weighted average of the dose equivalents, each weighted by a tissue or organ weighting factor, given by

$$H_E = \sum_T w_T H_T$$

where *T* represents a tissue or organ of the human body, H_T is the dose equivalent in the tissue, and w_T is a tissue weighting factor specified by ICRP (1977). For the radiations of concern in this analysis, the dose equivalent and the absorbed dose in a tissue are numerically equal (i.e. the radiation quality factor is unity).

The effective dose (*E*) is defined as the sum of the weighted equivalent doses in all the tissues and organs of the body (ICRP 1991). It is given by the expression:

$$E = \sum_T w'_T H_T$$

where H_T is the equivalent dose in tissue or organ *T* and w_T is the weighting factor for tissue *T*. Tissue weighting factors, defined by the ICRP for both effective dose equivalent (EDE) and effective dose, are shown in Table C.13.

Methodology

Effective dose equivalents and effective dose are calculated using anthropomorphic phantoms with the ICRP-specified tissues and organs. The MCNP is used to calculate the absorbed dose to

each organ in both a male and a female phantom. For photon energies # 1.5 MeV, secondary electrons are not transported and the organ doses are calculated using a kerma approximation. For photon energies > 1.5 MeV and for the **$**-emitting nuclides, secondary electrons were transported and the organ doses were calculated using the energy deposited in each cell.

Since tissue and organ doses are calculated for both male and female phantoms, the effective dose equivalent is determined using the following formula (ICRP 1991):

$$H_E = w_{br} H_{br} + \sum_{T \neq br} w_T \left(\frac{H_{T♂} + H_{T♀}}{2} \right) \qquad \textbf{C.8}$$

w_{br} = tissue-weighting factor for breast

H_{br} = dose equivalent to breast

H_T = dose equivalent to tissue *T* of male phantom

H_T = dose equivalent to tissue *T* of female phantom

A corresponding formula is utilized to calculate the effective dose.

Table C.13 Tissue weighting factors

Tissue or organ	w_T (EDE)	w_Tℕ(effective dose)
Gonads	0.25	0.2
Bone marrow (red)	0.12	0.12
Colon	-	0.12
Lung	0.12	0.12
Stomach	-	0.12
Bladder	-	0.05
Breast	0.15	0.05
Liver	-	0.05
Esophagus	-	0.05
Thyroid	0.03	0.05
Skin	-	0.01
Bone surface	0.03	0.01
Remainder	0.30[a]	0.05[b]
Total	1.00	1.00

Sources: ICRP 1977 (w_T) and ICRP 1991 (w_Tℕ)

[a] The value of 0.30 is applied to the average dose among the five remaining organs or tissues receiving the highest dose, excluding the skin, lens of eyes, and the extremities.

[b] The remainder is composed of the following tissues and organs: adrenals, brain, small intestines, kidney, muscle, pancreas, spleen, thymus, and uterus. The value of 0.05 is applied to the average dose to the remainder tissues. However, if a member of the remainder receives a dose in excess of the highest dose in any of the twelve organs for which a weighting factor is specified, a weighting factor of 0.025 is applied to that organ and a weighting factor of 0.025 is applied to the average dose in the rest of the remainder.

Phantoms

In this analysis, the Pacific Northwest National Laboratory (PNNL) male and female versions of the MIRD (Snyder et al. 1969, 1978) anthropomorphic phantom were modified and used to calculate organ absorbed dose (Tanner 1988).[8] Nabelssi (1993), using the model reported by Zankl et al. (1992), added the esophagus and skin to the PNNL phantoms. The PNNL female phantom is a scaled-down version of the MIRD phantom with the appropriate anatomy changes. The modified PNNL phantoms are similar to the Adam and Eva phantoms developed at Germany's National Research Center for Environment and Health, GSF (Kramer et al. 1982). A cross-sectional view of the male phantom is shown in Figure C.2.

A comparison of the masses of organs in the MIRD and the modified PNNL male phantom is presented in Table C.14.

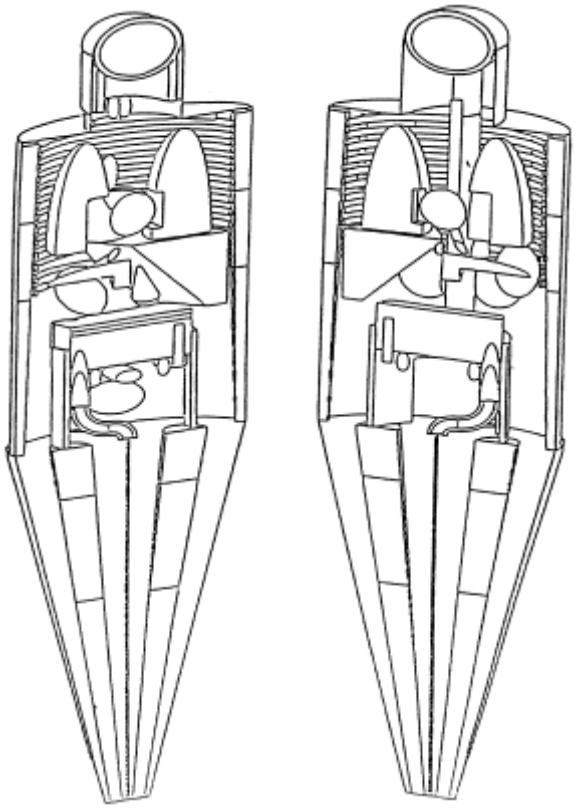

Figure C.2 Cross-sectional view of male anthropomorphic phantom

Source and Exposure Geometry

The source is modeled as a cylindrical disk of SAE 1020 steel with a radius of 2.0 cm, a thickness of 0.456 cm, and a mass of 45 g. The activity is uniformly distributed throughout the metal. As shown in Figure C.3, the source is modeled at three different locations on each of the two phantoms: the waist, center of ventral side (5 cm above the pelvic bone); the center of the sternum, ventral side; and the forehead, midway between the eyes. Each phantom is located in a cylindrical room filled with moist air, illustrated in Figure C.4. The walls, floor, and ceiling consist of 30-cm-thick concrete. The room has a radius of 2 m and a height of 2.5 m.

C.2.7.2 Results of Analysis

The results of the analysis are presented in Table C.15, which lists the dose rates from the 12 monoenergetic photon sources in three locations on the anthropomorphic phantoms. The results from the male and female phantoms were combined according to Equation C.8. The source on the sternum yields the highest effective dose equivalent and effective dose rate for each photon energy. These doses are adopted as the dose rates from the small object next to body in the present analysis.

[8] J. E. Tanner, Pacific Northwest National Laboratory, private communication with Michele Sutton Ferenci, SC&A, Inc., ca. March, 2002.

In order to estimate the uncertainty parameter, separate calculations of effective dose equivalents and effective doses from 0.1 MeV and 1 MeV photon sources on the sternum were performed for the male and female phantoms. The results are listed in Table C.16. The average of the coefficients of variation for the four pairs of values is listed at the bottom of the table. Based on these results, U_x for the small object on body is assigned a uniform distribution: 0.7 # U_x # 1.3. The results for the eight **$**-emitting nuclides (including Bi-210, a short-lived daughter of Pb-210) located on the sternum are listed in Table C.17.

Table C.14 Organ masses of anthropomorphic phantoms (g)

Organs	MIRD Phantom	Modified PNNL Phantom
Adrenals	15.5	19.4
Bladder	245.13	245.2
Brain	1,451	1,452.2
Esophagus	—	40.6
GI Tract		
Stomach	396.9	396.8
Sm. Intestines	1,044	1,040.3
Upper Lg. Intestines	429.2	429.7
Lower Lg. Intestines	296.9	293.8
Kidneys (both)	284.2	284.9
Liver	1,809	1,810.8
Lungs (both)	999.2	999.6
Muscle	28,000	30,073.7
Ovaries	8.268	10.8
Pancreas	60.27	60.1
RBM	1,500	1169
Skeleton	10,470	10,423.5
Skin	2,833	1,810.4
Spleen	173.6	173.9
Testes	37.08	37
Thymus	24.8	24.8
Thyroid	19.63	29.9
Uterus	65.4	80.2
Total body	69,880	70,060 ± 0.01%

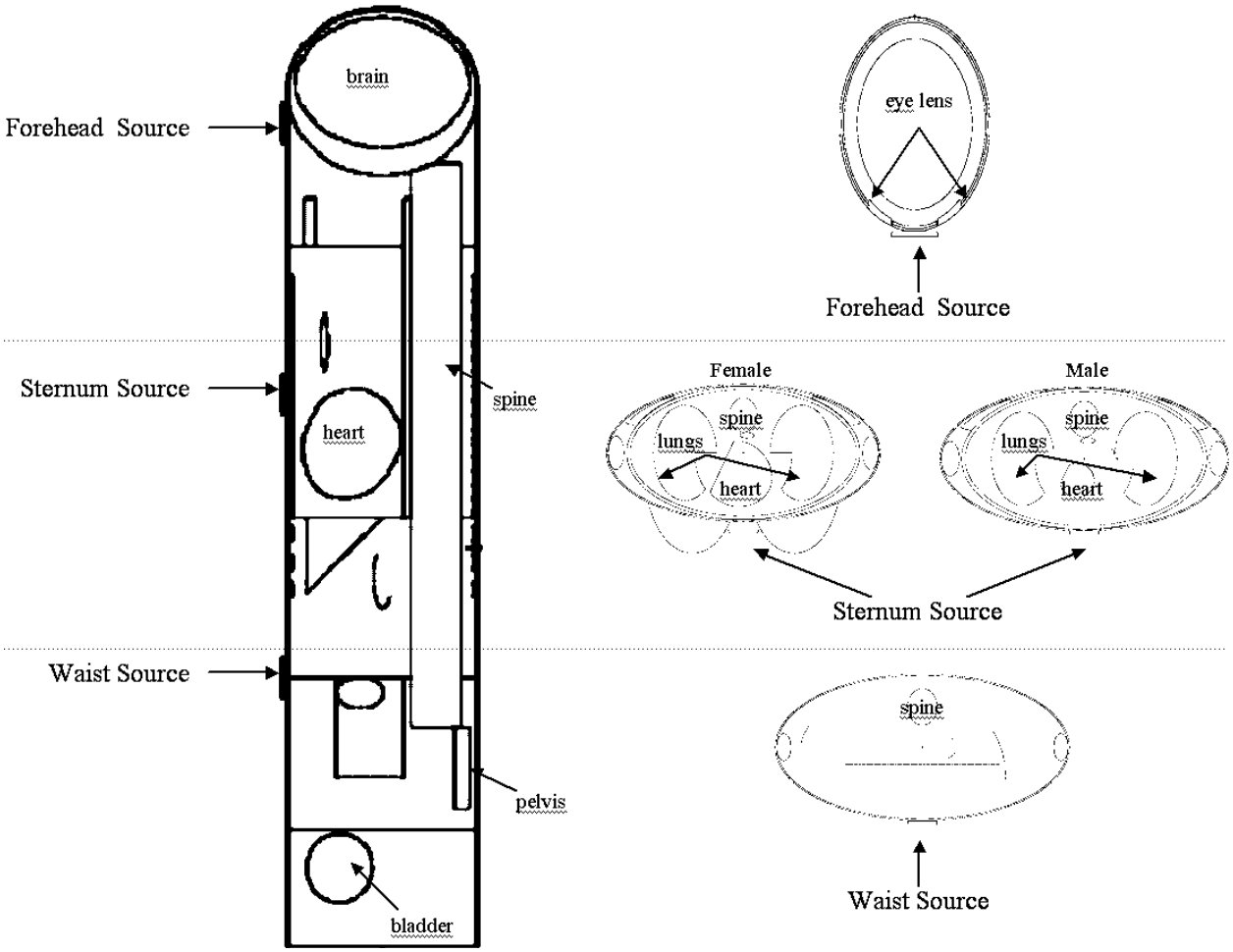

Figure C.3 Location of sources on the anthropomorphic phantoms

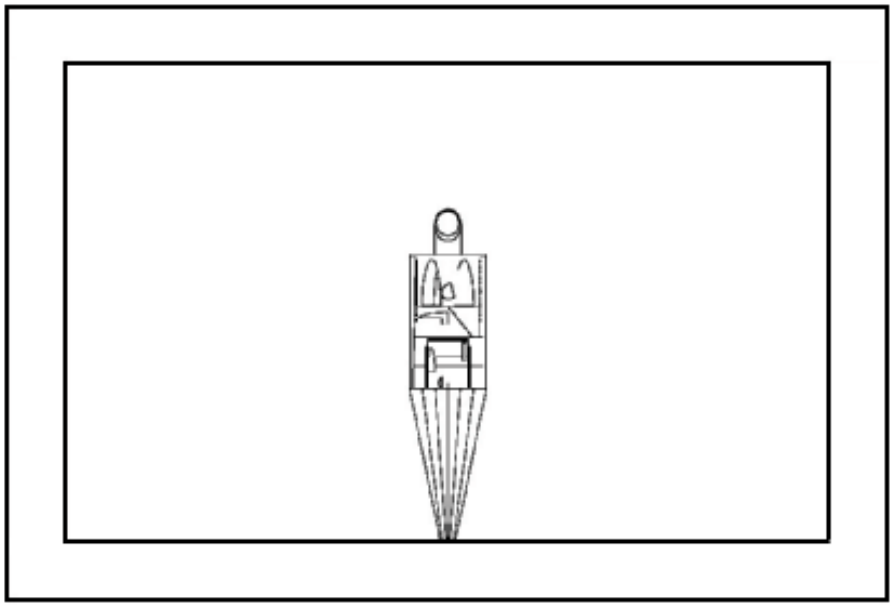

Figure C.4 Location of phantom in concrete-walled room

Table C.15 Dose rates from small object next to body

Energy (MeV)	Effective dose equivalent (Sv/s per Bq/g)			Effective dose (Sv/s per Bq/g)		
	Forehead	Sternum	Waist	Forehead	Sternum	Waist
0.010	6.57e-20	3.21e-18	1.01e-19	6.57e-20	3.21e-18	1.01e-19
0.020	8.24e-19	1.18e-17	5.49e-19	8.24e-19	1.18e-17	5.49e-19
0.020	3.70e-18	3.00e-17	2.37e-18	3.70e-18	3.00e-17	2.37e-18
0.030	2.70e-17	1.13e-16	2.61e-17	2.70e-17	1.13e-16	2.61e-17
0.050	1.85e-16	5.45e-16	2.49e-16	1.85e-16	5.45e-16	2.49e-16
0.070	5.27e-16	1.49e-15	8.15e-16	5.27e-16	1.49e-15	8.15e-16
0.100	1.21e-15	3.70e-15	2.15e-15	1.21e-15	3.70e-15	2.15e-15
0.200	3.83e-15	1.29e-14	6.80e-15	3.83e-15	1.29e-14	6.80e-15
0.500	1.16e-14	3.85e-14	1.89e-14	1.16e-14	3.85e-14	1.89e-14
1.0	2.28e-14	7.61e-14	3.72e-14	2.28e-14	7.61e-14	3.72e-14
2.0	4.24e-14	1.36e-13	7.11e-14	4.24e-14	1.36e-13	7.11e-14
5.0	8.42e-14	2.65e-13	1.35e-13	8.42e-14	2.65e-13	1.35e-13

Table C.16 Small object next to body—uncertainty parameter

Energy (MeV)	EDE (Sv/s per Bq/g)			Effective dose (Sv/s per Bq/g)		
	Male	Female	C_v[a]	Male	Female	C_v[a]
0.1	4.73e-17	7.68e-17	0.34	3.06e-17	4.10e-17	0.21
1.0	8.23e-16	1.59e-15	0.45	5.58e-16	8.08e-16	0.26
Average (EDE and effective dose)						0.31

[a] Coefficient of variation

Table C.17 Small object next to body–$ bremsstrahlung

Nuclide	EDE (Sv/s per Bq/g)	Effective dose (Sv/s per Bq/g)
C-14	1.67e-17	6.67e-18
P-32	7.75e-15	3.11e-15
S-35	1.69e-17	6.71e-18
Tc-99	1.13e-16	4.55e-17
Cs-135	8.56e-17	3.42e-17
W-185	2.23e-16	9.01e-17
Tl-204	1.02e-15	4.13e-16
Bi-210	2.71e-15	1.09e-15

C.2.8 Truck Scenarios

A number of the exposure scenarios involve material being transported by highway trucks—specifically, tractor-trailer combinations. The descriptions of the trucks and trailers in the present analysis are based on commercial vehicles that are likely to be used for particular applications. Specific vehicles are selected for individual scenarios to provide a broad cross-section of makes and models of trucks in the analysis.

Calculations of doses to an individual occupying the driver's seat utilize the posteroanterior (PA) irradiation geometry, since the radiation source is located behind the driver. Doses to an individual in the sleeper berth utilize the rotational (ROT) geometry.

C.2.8.1 Scrap Truck

The truck used to transport steel scrap is based on a heavy-duty highway truck with a thick-walled trailer and steel cab, suitable for loading scrap at a scrap yard or demolition site. The trailer is 8 ft wide × 5 ft high × 40 ft long (243.8 cm × 152.4 cm × 12.19 m), with sides and bottom of ¼-in (0.635-cm) steel.[9] The mass of the scrap is 20 t, which is at the upper end of loads that are permitted on public highways in the United States.[10] Both the trailer and the scrap consist of SAE 1020 steel. The load is assumed to fill the entire volume of the trailer—45.31 m^3—resulting in an average density of 0.4414 g/cm^3. The distance between the driver and the front of the load ranges from 8 ft to 11 ft (2.4 – 3.4 m).

The cab is modeled as a rectangular shell composed of SAE 1020 steel with a uniform wall thickness of 0.060 in (0.15 cm). The dimensions of the cab, the position of the driver, and the height of the truck above the pavement are scaled from an engineering drawing of the Heil Trailer International Super Jet Model 1040 dry bulk trailer, shown in Figure C.5. Since the trips are short (see Section 3.7.3.1 of the main report), the truck would be equipped with a day cab (i.e., without a sleeper berth). The detailed dimensions are shown in Table C.18. The height above ground of the two tally points is centered on the load.

Table C.18 Scrap truck driver exposure geometry (cm)

Location	Thickness	X		Y		Z	
		Min	Max	Min	Max	Min	Max
Load		0	-1219	-121.9	121.9	0	152.4
Trailer: 4 sides + bottom	0.635	0	-1219	-121.9	121.9	0	152.4
Truck cab: 6 walls	0.15	213	396	-107	107	0	152.4
Pavement	—					—	-125
Tally points (TP)	1	244		53		76.2	
	2	335					

[9] Al Johnson, Duratek, Inc., private communication with Robert Anigstein, SC&A, Inc., November 16, 2001.

[10] According to the Federal Highway Administration, the maximum allowable weight of a loaded truck is 80,000 lb (36.3 t). Accounting for the weight of a heavy-duty trailer, the tractor, and fuel, 20 t is a practical upper-end load.

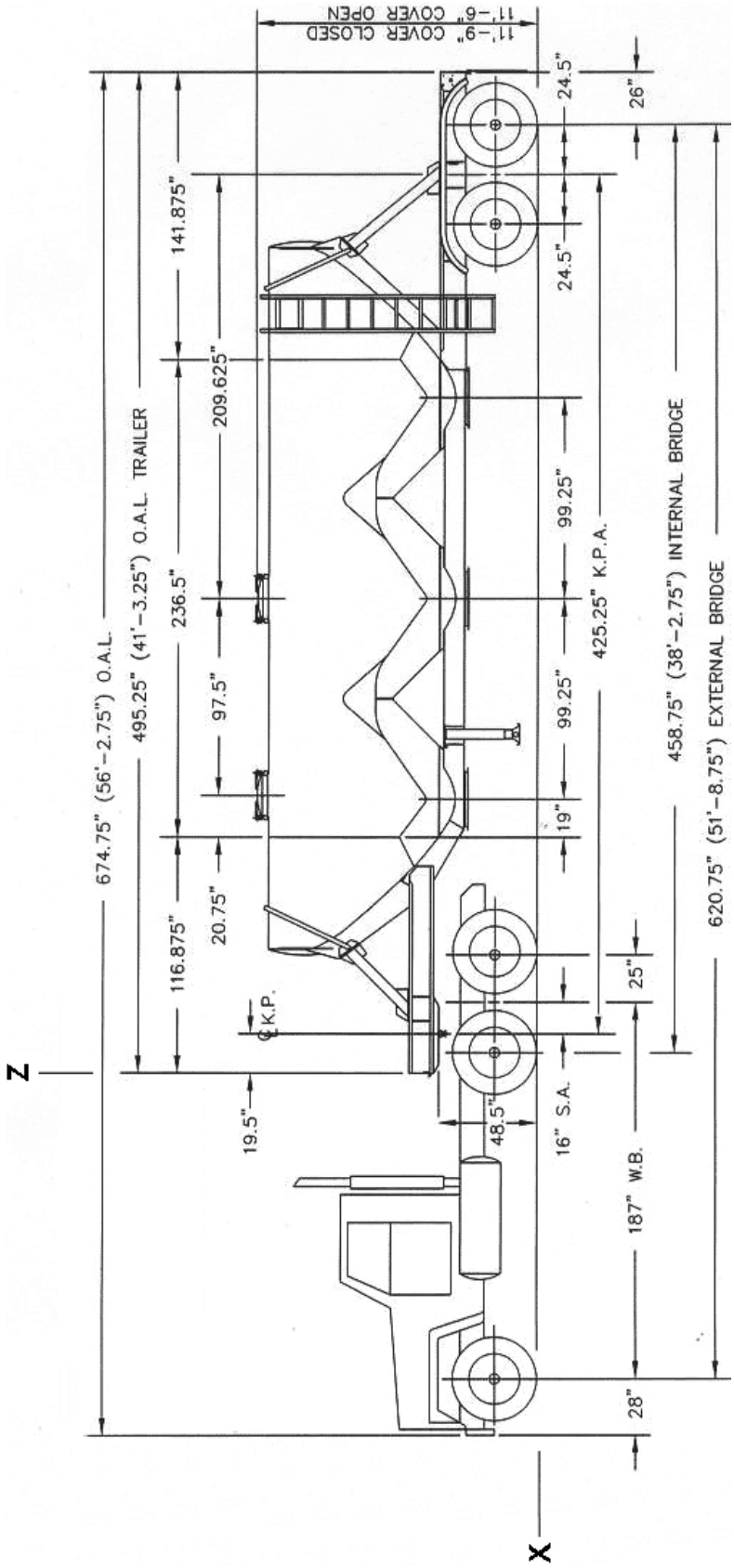

Figure C.5 Schematic of Heil Trailer International Super Jet Model 1040 aluminum dry bulk trailer + tractor (note: x-axis reversed)

The results of the analysis are presented in Table C.19. The dose rates from 10 of the 12 monoenergetic photon sources and 15 **$**-emitting nuclides are computed by MCNP at the two location specified in Table C.18. Because of the strong absorption of low-energy photons by the walls of the truck cab, the dose rates from 10 and 15 keV sources are too low to be statistically meaningful and are therefore not listed. Dose rates from bremsstrahlung from very low-energy **$**-emitting nuclides (i.e., Sm-151, Tm-171, Pu-241, and Bk-249) are also too low to be statistically meaningful—these nuclides are therefore not listed. The average of the dose rates at the two tally points is adopted as the dose rate from each of the 10 photon sources and 15 beta spectra in this exposure geometry. $\overline{C_v}$ is calculated on the basis of all 25 sources. Based on these results, U_x for the driver of the scrap truck is assigned a uniform distribution: 0.7 # U_x # 1.3.

Table C.19 Dose rates to scrap truck driver

Energy (MeV) or nuclide	Effective dose equivalent (Sv/s per Bq/g)				Effective dose (Sv/s per Bq/g)			
	TP 1	TP 2	Mean	C_v[a]	TP 1	TP 2	Mean	C_v[a]
0.020	3.01e-34	8.89e-34	5.95e-34	0.70	1.10e-34	3.21e-34	2.16e-34	0.69
0.030	5.35e-23	7.40e-23	6.38e-23	0.23	2.87e-23	4.01e-23	3.44e-23	0.23
0.050	5.04e-18	5.41e-18	5.23e-18	0.05	3.78e-18	4.06e-18	3.92e-18	0.05
0.070	3.21e-16	2.48e-16	2.85e-16	0.18	2.77e-16	2.13e-16	2.45e-16	0.18
0.100	1.02e-14	6.62e-15	8.41e-15	0.30	9.27e-15	6.01e-15	7.64e-15	0.30
0.200	2.35e-13	1.48e-13	1.92e-13	0.32	2.17e-13	1.37e-13	1.77e-13	0.32
0.500	1.37e-12	8.53e-13	1.11e-12	0.33	1.28e-12	7.97e-13	1.04e-12	0.33
1.0	3.31e-12	2.06e-12	2.69e-12	0.33	3.10e-12	1.93e-12	2.52e-12	0.33
2.0	7.04e-12	4.36e-12	5.70e-12	0.33	6.62e-12	4.11e-12	5.37e-12	0.33
5.0	1.57e-11	9.75e-12	1.27e-11	0.33	1.46e-11	9.05e-12	1.18e-11	0.33
C-14	4.10e-19	2.80e-19	3.45e-19	0.27	3.72e-19	2.53e-19	3.13e-19	0.27
P-32	1.26e-14	7.81e-15	1.02e-14	0.33	1.17e-14	7.27e-15	9.49e-15	0.33
S-35	4.94e-19	3.23e-19	4.09e-19	0.30	4.47e-19	2.92e-19	3.70e-19	0.30
Cl-36	9.82e-16	6.35e-16	8.09e-16	0.30	9.08e-16	5.87e-16	7.48e-16	0.30
Ca-45	9.43e-18	5.61e-18	7.52e-18	0.36	8.63e-18	5.12e-18	6.88e-18	0.36
Sr-89	9.69e-15	6.03e-14	3.50e-14	1.02	9.02e-15	5.61e-15	7.32e-15	0.33
Sr-90	3.26e-16	1.93e-16	2.60e-16	0.36	3.00e-16	1.78e-16	2.39e-16	0.36
Y-90	2.71e-14	1.71e-14	2.21e-14	0.32	2.52e-14	1.60e-14	2.06e-14	0.32
Y-91	1.07e-14	6.67e-15	8.69e-15	0.33	9.95e-15	6.20e-15	8.08e-15	0.33
Tc-99	2.42e-17	1.50e-17	1.96e-17	0.33	2.22e-17	1.37e-17	1.80e-17	0.33
Cs-135	1.50e-17	9.77e-18	1.24e-17	0.30	1.37e-17	8.93e-18	1.13e-17	0.30
Pm-147	3.06e-18	2.05e-18	2.56e-18	0.28	2.79e-18	1.87e-18	2.33e-18	0.28
Tm-170	1.84e-15	1.17e-15	1.51e-15	0.31	1.70e-15	1.08e-15	1.39e-15	0.32
W-185	8.79e-17	5.77e-17	7.28e-17	0.29	8.09e-17	5.30e-17	6.70e-17	0.29
Tl-204	9.06e-16	5.75e-16	7.41e-16	0.32	8.38e-16	5.32e-16	6.85e-16	0.32
Average				0.34				0.31

[a] Coefficient of variation

C.2.8.2 Slag Truck

Steel slag would also be transported by a tractor-trailer. A 20-t load of slag, with a density of 2 g/cm^3 (see Table C.1) has a volume of 10 m^3. A dump trailer would be used to facilitate unloading. The dimensions of the trailer are based on a Montone aluminum trailer that is 24 ft long and 8 ft wide (7.3 × 2.4 m). The height of the load is calculated by dividing the volume of the slag by the area of the trailer.

Both the trailer and the cab are made of aluminum, which has a density of 2.7 g/cm^3. The cab has the same overall dimensions as the cab of the truck used to haul steel scrap, described in Section C.2.8.1. However, the cab is made of ⅛-in-thick (0.3175 cm) aluminum. The detailed geometry specifications are shown in Table C.20. The height above ground of the two tally points is centered on the height of the load.

The results of the analysis are presented in Table C.21. The dose rates from 11 of the 12 monoenergetic photon sources and 13 **$**-emitting nuclides that partition to slag are computed by MCNP at the two location specified in Table C.20. Because of the strong absorption of low-energy photons by the walls of the cab, the dose rates from the 10 keV source are too low to be statistically meaningful—this source is therefore not listed. Dose rates from the MCNP-calculated bremsstrahlung from very low-energy **$**-emitting nuclides (i.e., Sm-151, Tm-171, Pu-241, and Bk-249) are likewise very low—these nuclides are also not listed. The average of the dose rates at the two tally points is adopted as the dose rate from each of the 11 photon sources and 13 beta spectra in this exposure geometry. $\overline{C_v}$ is calculated on the basis of all 24 sources. Based on these results, U_x for the driver of the slag truck is assigned a uniform distribution: 0.7 # U_x # 1.3.

Table C.20 Slag truck driver exposure geometry (cm)

Location		Thickness	X		Y		Z	
			Min	Max	Min	Max	Min	Max
Load			-731.5	0.0	-121.9	121.9	137.2	193.0
Truck cab—aluminum		0.3175	153.0	363.9	-121.9	121.9	66.5	245.4
Trailer aluminum	floor	0.635	-731.5	0.0	-121.9	121.9	136.5	137.2
	nose & tail[a]	0.4826	-731.5	0.0	-121.9	121.9	137.2	259.1
	sides[b]	0.4064	-731.5	0.0	-121.9	121.9	137.2	259.1
Pavement—concrete		40.6					-40.6	0.0
Tally points (TP)		1	243.8		61.0		168.4	
		2	335.3					

[a] x-min and x-max refer to tail and nose, respectively

[b] y-min and y-max refer to right and left sides, respectively

Table C.21 Dose rates to slag truck driver

Energy (MeV) or nuclide	Effective dose equivalent (Sv/s per Bq/g)				Effective dose (Sv/s per Bq/g)			
	TP 1	TP 2	Mean	C_v[a]	TP 1	TP 2	Mean	C_v[a]
0.015	3.19e-24	3.38e-24	3.29e-24	0.04	2.30e-23	1.81e-23	2.06e-23	0.17
0.020	1.62e-19	1.05e-19	1.34e-19	0.30	5.91e-20	3.84e-20	4.88e-20	0.30
0.030	1.10e-16	6.85e-17	8.93e-17	0.33	6.17e-17	3.83e-17	5.00e-17	0.33
0.050	4.37e-15	2.75e-15	3.56e-15	0.32	3.39e-15	2.12e-15	2.76e-15	0.33
0.070	1.88e-14	1.21e-14	1.55e-14	0.31	1.62e-14	1.03e-14	1.33e-14	0.31
0.100	6.12e-14	3.98e-14	5.05e-14	0.30	5.50e-14	3.57e-14	4.54e-14	0.30
0.200	2.81e-13	1.82e-13	2.32e-13	0.30	2.58e-13	1.67e-13	2.13e-13	0.30
0.500	9.47e-13	5.99e-13	7.73e-13	0.32	8.82e-13	5.58e-13	7.20e-13	0.32
1.0	2.00e-12	1.24e-12	1.62e-12	0.33	1.87e-12	1.16e-12	1.52e-12	0.33
2.0	4.03e-12	2.46e-12	3.25e-12	0.34	3.79e-12	2.31e-12	3.05e-12	0.34
5.0	9.48e-12	5.70e-12	7.59e-12	0.35	8.79e-12	5.29e-12	7.04e-12	0.35
P-32	6.12e-15	3.93e-15	5.03e-15	0.31	5.63e-15	3.61e-15	4.62e-15	0.31
S-35	2.97e-18	1.94e-18	2.46e-18	0.30	2.50e-18	1.63e-18	2.07e-18	0.30
Cl-36	7.72e-16	5.07e-16	6.40e-16	0.29	7.01e-16	4.60e-16	5.81e-16	0.29
Ca-45	1.99e-17	1.26e-17	1.63e-17	0.32	1.75e-17	1.10e-17	1.43e-17	0.32
Sr-89	4.92e-15	3.18e-15	4.05e-15	0.30	4.52e-15	2.91e-15	3.72e-15	0.31
Sr-90	2.79e-16	1.74e-16	2.27e-16	0.33	2.52e-16	1.57e-16	2.05e-16	0.33
Y-90	1.25e-14	8.15e-15	1.03e-14	0.30	1.15e-14	7.51e-15	9.51e-15	0.30
Y-91	5.25e-15	3.39e-15	4.32e-15	0.30	4.83e-15	3.12e-15	3.98e-15	0.30
Cs-135	2.85e-17	1.84e-17	2.35e-17	0.31	2.51e-17	1.61e-17	2.06e-17	0.31
Pm-147	9.45e-18	5.96e-18	7.71e-18	0.32	8.20e-18	5.17e-18	6.69e-18	0.32
Sm-151	2.94e-20	1.76e-20	2.35e-20	0.36	2.09e-20	1.25e-20	1.67e-20	0.36
Tm-170	1.15e-15	7.44e-16	9.47e-16	0.30	1.05e-15	6.78e-16	8.64e-16	0.30
Bk-249	5.75e-19	3.72e-19	4.74e-19	0.30	4.57e-19	2.95e-19	3.76e-19	0.30
Average				0.30				0.31

[a] Coefficient of variation

C.2.8.3 Dry Bulk Trailer

EAF baghouse dust is often transported in dry bulk trailers. These trailers, which typically have two to four separate hoppers, are filled through hatches on top of each compartment and are emptied by gravity through hatches on the bottom. The model adopted for the present analysis is the Heil Trailer International Super Jet Model 1040 dry bulk trailer. Such a trailer was parked under the baghouse at a steel mill during a visit by SC&A personnel. An overall schematic diagram of this trailer is shown in Figure C.5, while Figure C.6 shows a cross-sectional view of one hopper.

The cargo compartment consists of three hoppers, which are vertical, right circular cones. As shown in Figure C.6, the cones are trimmed at their two internal intersections so that there is no overlap. Each cone is also trimmed at its intersection with the barrel, which is a horizontal right

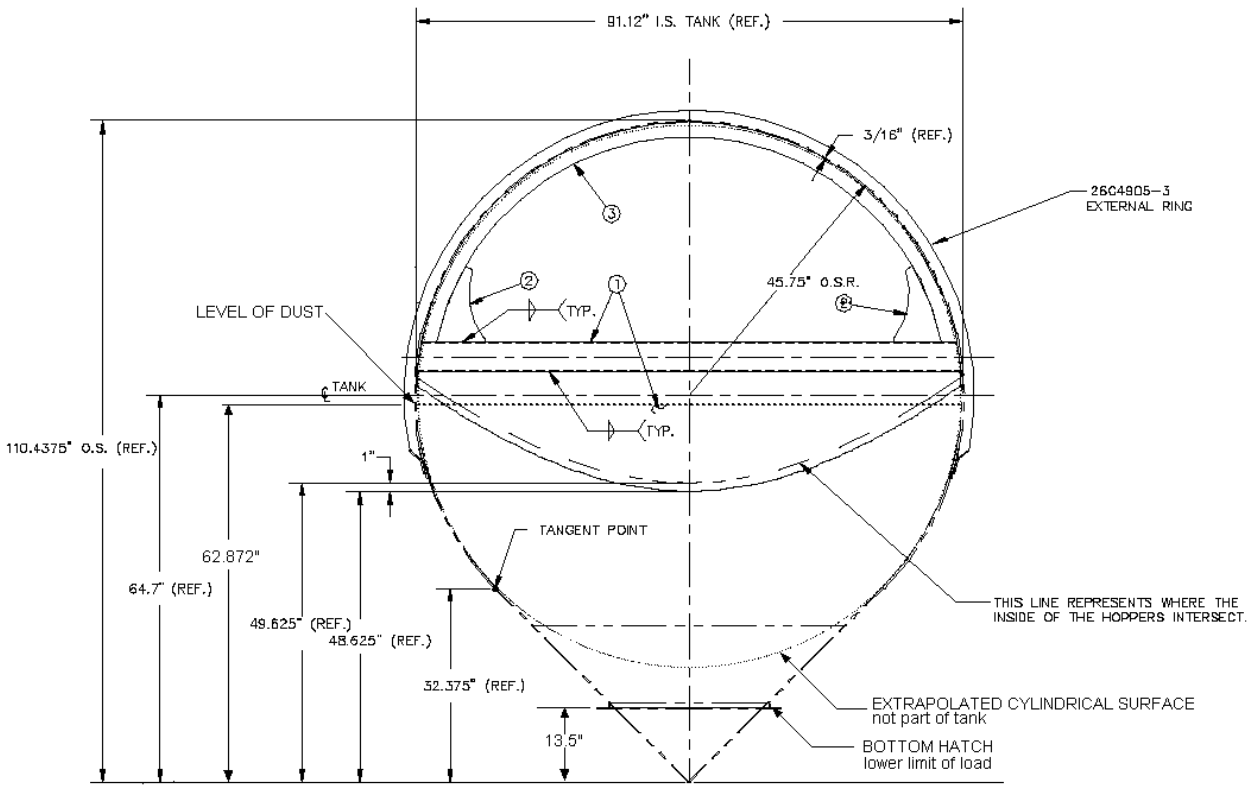

Figure C.6 Cross-section of Heil Dry Bulk Trailer (Yielding 2002)

circular cylinder. Each end hopper is also trimmed at its intersection with the end caps of the cylindrical barrel. Each cone is truncated near the apex by the bottom hatch (Yielding 2002).

The detailed dimensions of the tractor-trailer combination are listed in Table C.22. The trailer is assumed to contain 22 tons (20 t) of EAF dust. Based on the density of 1.72 g/cm^3, cited in Section C.2.3, the dust occupies a volume of 11.6 m^3. The level of the surface of the dust in the trailer is calculated by an iterative process, based on the geometry.

C.2.8.3.1 Worker Atop Dust Truck

Two tally points are used in assessing doses to a worker standing on top of the trailer during the transfer of dust from the baghouse. One location (TP 1 in Table C.22) is 2 feet (60.96 cm) behind the center of the forward hatch, while the second (TP 2) is 2 feet behind the middle hatch. The dose rates from the 12 monoenergetic photon sources and 3 **$**-emitting nuclides that partition to the dust are listed in Table C.23. Because of the strong absorption of low-energy photons by the walls of the trailer, the effective dose equivalent rate from the 10 keV source is too low to be statistically meaningful and is therefore not listed. The coefficient of variation is calculated in the conventional manner, based on the mean and standard deviation at each location. The average of the dose rates at the two tally points is adopted as the dose rate from each of the 11 photon sources and 3 beta spectra in this exposure geometry. $\overline{C_v}$ is calculated on

the basis of all sources. Based on these results, U_x for transferring EAF dust is assigned a uniform distribution: 0.9 # U_x # 1.1.

Table C.22 Dry bulk trailer exposure geometry (cm)

Location		Thickness	X		Y		Z	
			Min	Max	Min	Max	Min	Max
Load			-159.70	-1034.73			90.08	215.49
Cylindrical shell[a,b]		0.476	-159.23	-1035.21	axis =	0.00	220.13	r = 116.21
Cones[a]	1	0.476	z axis:	-345.12	0.00	lower bounds = 90.08		
	2			-597.22	0.00			
	3			-849.31	0.00	apex[c] =	55.79	56.46
Truck cab[a,b]		0.3175	153.04	363.86	-121.92	121.92	66.55	245.36
Pavement—concrete		40.64					-40.64	0.00
Tally points (TP)		1	-410.53		0.00		436.65	
		2	-658.18					
		3	213.36		60.96		147.32	
		4	304.80					

[a] Aluminum

[b] Outer dimensions listed

[c] z-min and z-max refer to the apex of the outside and the inside of the cones, respectively

Table C.23 Dose rates to worker atop dust truck

Energy (MeV) or nuclide	Effective dose equivalent (Sv/s per Bq/g)				Effective dose (Sv/s per Bq/g)			
	TP 1	TP 2	Mean	C_v[a]	TP 1	TP 2	Mean	C_v[a]
0.010	—	—	—	—	1.40e-33	1.35e-33	1.38e-33	0.026
0.015	7.82e-22	7.43e-22	7.63e-22	0.036	4.84e-22	4.41e-22	4.63e-22	0.066
0.020	3.26e-18	3.33e-18	3.30e-18	0.015	1.15e-18	1.17e-18	1.16e-18	0.012
0.030	6.88e-16	7.18e-16	7.03e-16	0.030	3.91e-16	4.08e-16	4.00e-16	0.030
0.050	1.69e-14	1.80e-14	1.75e-14	0.045	1.33e-14	1.42e-14	1.38e-14	0.046
0.070	6.56e-14	7.01e-14	6.79e-14	0.047	5.74e-14	6.13e-14	5.94e-14	0.046
0.100	2.21e-13	2.36e-13	2.29e-13	0.046	2.01e-13	2.15e-13	2.08e-13	0.048
0.200	1.29e-12	1.38e-12	1.34e-12	0.048	1.19e-12	1.28e-12	1.24e-12	0.052
0.500	5.58e-12	5.99e-12	5.79e-12	0.050	5.22e-12	5.60e-12	5.41e-12	0.050
1.0	1.33e-11	1.43e-11	1.38e-11	0.051	1.25e-11	1.34e-11	1.30e-11	0.049
2.0	2.85e-11	3.08e-11	2.97e-11	0.055	2.68e-11	2.89e-11	2.79e-11	0.053
5.0	6.67e-11	7.21e-11	6.94e-11	0.055	6.19e-11	6.69e-11	6.44e-11	0.055
Cl-36	4.56e-15	4.95e-15	4.76e-15	0.058	4.18e-15	4.55e-15	4.37e-15	0.060
Cs-135	1.56e-16	1.68e-16	1.62e-16	0.052	1.39e-16	1.49e-16	1.44e-16	0.049
Pb-210	8.02e-21	9.32e-21	8.67e-21	0.106	5.19e-21	6.28e-21	5.74e-21	0.134
Average				0.050				0.052

[a] Coefficient of variation

C.2.8.3.2 Dust in Dry Bulk Trailer

Two tally points are used in assessing doses to the driver hauling EAF dust in a dry bulk trailer—TP 3 and TP 4 in Table C.22. Both place him in the driver's seat at different distances from the load. The height above ground is estimated from the truck depicted in Figure C.5. The dose rates from 11 of the 12 monoenergetic photon sources and 2 **$**-emitting nuclides that partition to the dust are listed in Table C.24. Because of the strong absorption of low-energy photons by the walls of the truck cab, the dose rates from the 10 keV source are too low to be statistically meaningful and are therefore not listed. Dose rates from bremsstrahlung from Pb-210, a very low-energy **$**-emitting nuclide, are also too low to be statistically meaningful—this nuclide is therefore not listed. The coefficient of variation is calculated in the conventional manner, based on the mean and standard deviation at each location. Based on these results, U_x for transporting EAF dust in a dry bulk trailer is assigned a uniform distribution: 0.8 # U_x # 1.2.

Table C.24 Dose rates to driver hauling EAF dust in dry bulk trailer

Energy (MeV) or nuclide	Effective dose equivalent (Sv/s per Bq/g)				Effective dose (Sv/s per Bq/g)			
	TP 3	TP 4	Mean	C_v[a]	TP 3	TP 4	Mean	C_v[a]
0.015	4.64e-27	2.78e-27	3.71e-27	0.36	2.79e-27	1.70e-27	2.25e-27	0.34
0.020	4.80e-21	3.46e-21	4.13e-21	0.23	1.70e-21	1.23e-21	1.47e-21	0.23
0.030	1.57e-17	1.12e-17	1.35e-17	0.24	8.77e-18	6.24e-18	7.51e-18	0.24
0.050	1.08e-15	7.93e-16	9.37e-16	0.22	8.30e-16	6.11e-16	7.21e-16	0.21
0.070	5.47e-15	4.10e-15	4.79e-15	0.20	4.68e-15	3.50e-15	4.09e-15	0.20
0.100	2.08e-14	1.56e-14	1.82e-14	0.20	1.86e-14	1.40e-14	1.63e-14	0.20
0.200	1.21e-13	9.06e-14	1.06e-13	0.20	1.11e-13	8.31e-14	9.71e-14	0.20
0.500	4.61e-13	3.43e-13	4.02e-13	0.21	4.29e-13	3.20e-13	3.75e-13	0.21
1.0	1.01e-12	7.43e-13	8.77e-13	0.22	9.44e-13	6.96e-13	8.20e-13	0.21
2.0	2.06e-12	1.51e-12	1.79e-12	0.22	1.93e-12	1.42e-12	1.68e-12	0.22
5.0	4.75e-12	3.46e-12	4.11e-12	0.22	4.41e-12	3.21e-12	3.81e-12	0.22
Cl-36	4.18e-16	3.16e-16	3.67e-16	0.20	3.81e-16	2.88e-16	3.35e-16	0.20
Cs-135	1.50e-17	1.14e-17	1.32e-17	0.19	1.33e-17	1.01e-17	1.17e-17	0.19
Average				0.22				0.22

[a] Coefficient of variation

C.2.8.4 Dust in Dump Trailer

Another means of transporting EAF dust is by dump trailer. Such a trailer is described in Section C.2.8.2, the only difference being the volume of the load, which is 11.6 m^3 (see Section C.2.8.3.2). The height of the load is calculated by dividing the volume by the area of the trailer. The dimensions of the cab are based on the Kenworth Model T2000 (Kenworth 2001). The cab is equipped with a sleeper berth, so the dose rates are calculated at four positions: two in the driver's seat and two in the sleeper. The two sets of positions span a range of distances between the tractor and the load.

Table C.25 Dump trailer hauling EAF dust: exposure geometry (cm)

Location		Thickness	X		Y		Z	
			Min	Max	Min	Max	Min	Max
Load			-811.8	-81.3	-121.5	121.5	137.2	202.5
Truck cab—aluminum		0.30	0.0	287.0	-106.7	106.7	127.0	391.2
Trailer aluminum	floor	0.60	-811.8	-81.3	-121.9	121.9	136.5	137.2
	nose & tail[a]	0.48	-811.8	-81.3	-121.9	121.9	137.2	259.1
	sides[b]	0.40	-811.8	-81.3	-121.9	121.9	137.2	259.1
Pavement—concrete							-4	0.0
Tally points	driver's seat	1	205.7		79.38		180.3	
		2	172.7					
	sleeper	3	95.3		0.00		203.2	
		4	114.3					

[a] x-min and x-max refer to tail and nose, respectively

[b] y-min and y-max refer to right and left sides, respectively

The results of the analysis are presented in Tables C.26 and C.27. The dose rates from 11 of the 12 monoenergetic photon sources and 13 **$**-emitting nuclides that partition to slag are computed by MCNP at the two location specified in Table C.25. Because of the strong absorption of low-energy photons by the walls of the truck cab, the dose rates from the 10 keV source are too low to be statistically meaningful and are therefore not listed. The average of the dose rates at the two tally points is adopted as the dose rate from each of the 11 photon sources and 3 beta spectra in this exposure geometry. $\overline{C_v}$ is calculated on the basis of all 14 sources. Based on these results, U_x is assigned a uniform distribution. In the driver's seat, 0.88 # U_x # 1.12, while in the sleeper, 0.91 # U_x # 1.09.

C.2.8.5 Truck With I-Beams

The truck used to transport I-beams, a representative steel product, consists of a tractor hauling a flat-bed trailer. The cab is the same as that of the slag truck described in Section C.2.8.2. The bed of the trailer is 40 ft long by 8 ft wide (12.19 m × 2.44 m), and is made of aluminum honeycomb. The load consists of 22 I-beams, made of SAE 1020 steel. The dimensions of a single I-beam, listed in Table C.28, are taken from a manufacturer's on-line catalog (South St. Paul Steel Supply Co. 2004). These dimensions are adjusted so that a simplified model, using a rectilinear geometry, yields the weight of 50 lb/ft (74.41 kg/m) specified by the manufacturer.

The I-beams are furnished in lengths of 20 ft and 40 ft (6.56 and 13.12 m). The 40-ft length is adopted for the present analysis. A schematic diagram showing an end view of the I-beams arranged on the trailer is shown in Figure C.7. Each I-beam weighs 2,000 lb (907.2 kg). The detailed geometry of the load is specified in Table C.29. The remaining details of the exposure geometry are shown in Table C.30.

Table C.26 Hauling EAF dust in dump trailer: dose rates in driver's seat

Energy (MeV) or nuclide	Effective dose equivalent (Sv/s per Bq/g)				Effective dose (Sv/s per Bq/g)			
	TP 1	TP 2	Mean	C_v[a]	TP 1	TP 2	Mean	C_v[a]
0.015	6.94e-24	6.13e-24	6.54e-24	0.09	2.49e-23	2.43e-23	2.46e-23	0.02
0.020	9.24e-20	1.03e-19	9.77e-20	0.08	3.39e-20	3.77e-20	3.58e-20	0.08
0.030	5.20e-17	6.24e-17	5.72e-17	0.13	2.92e-17	3.51e-17	3.22e-17	0.13
0.050	2.12e-15	2.55e-15	2.34e-15	0.13	1.65e-15	1.98e-15	1.82e-15	0.13
0.070	9.78e-15	1.17e-14	1.07e-14	0.13	8.41e-15	1.01e-14	9.26e-15	0.13
0.100	3.61e-14	4.29e-14	3.95e-14	0.12	3.25e-14	3.87e-14	3.56e-14	0.12
0.200	2.09e-13	2.48e-13	2.29e-13	0.12	1.93e-13	2.28e-13	2.11e-13	0.12
0.500	8.05e-13	9.61e-13	8.83e-13	0.13	7.50e-13	8.95e-13	8.23e-13	0.13
1.0	1.74e-12	2.09e-12	1.92e-12	0.13	1.63e-12	1.95e-12	1.79e-12	0.13
2.0	3.52e-12	4.23e-12	3.88e-12	0.13	3.30e-12	3.98e-12	3.64e-12	0.13
5.0	8.01e-12	9.67e-12	8.84e-12	0.13	7.43e-12	8.98e-12	8.21e-12	0.13
Cl-36	7.43e-16	8.68e-16	8.06e-16	0.11	6.78e-16	7.92e-16	7.35e-16	0.11
Cs-135	2.34e-17	2.67e-17	2.51e-17	0.09	1.98e-17	2.36e-17	2.17e-17	0.12
Pb-210	8.22e-22	1.03e-21	9.26e-22	0.16	5.47e-22	6.84e-22	6.16e-22	0.16
Average				0.12				0.12

[a] Coefficient of variation

Table C.27 Hauling EAF dust in dump trailer: dose rates in sleeper berth

Energy (MeV) or nuclide	Effective dose equivalent (Sv/s per Bq/g)				Effective dose (Sv/s per Bq/g)			
	TP 3	TP 4	Mean	C_v[a]	TP 3	TP 4	Mean	C_v[a]
0.015	5.50e-24	7.08e-24	6.29e-24	0.18	3.36e-23	3.72e-23	3.54e-23	0.07
0.020	1.70e-19	1.63e-19	1.67e-19	0.03	6.24e-20	5.98e-20	6.11e-20	0.03
0.030	1.17e-16	1.03e-16	1.10e-16	0.09	6.59e-17	5.81e-17	6.20e-17	0.09
0.050	4.66e-15	4.06e-15	4.36e-15	0.10	3.64e-15	3.16e-15	3.40e-15	0.10
0.070	2.06e-14	1.80e-14	1.93e-14	0.10	1.78e-14	1.56e-14	1.67e-14	0.09
0.100	7.36e-14	6.46e-14	6.91e-14	0.09	6.65e-14	5.83e-14	6.24e-14	0.09
0.200	4.23e-13	3.71e-13	3.97e-13	0.09	3.90e-13	3.42e-13	3.66e-13	0.09
0.500	1.68e-12	1.46e-12	1.57e-12	0.10	1.56e-12	1.36e-12	1.46e-12	0.10
1.0	3.73e-12	3.23e-12	3.48e-12	0.10	3.50e-12	3.03e-12	3.27e-12	0.10
2.0	7.74e-12	6.67e-12	7.21e-12	0.11	7.27e-12	6.27e-12	6.77e-12	0.10
5.0	1.79e-11	1.54e-11	1.67e-11	0.11	1.66e-11	1.43e-11	1.55e-11	0.11
Cl-36	1.51e-15	1.33e-15	1.42e-15	0.09	1.38e-15	1.21e-15	1.30e-15	0.09
Cs-135	4.71e-17	4.13e-17	4.42e-17	0.09	4.20e-17	3.68e-17	3.94e-17	0.09
Pb-210	1.62e-21	1.41e-21	1.52e-21	0.10	1.08e-21	9.37e-22	1.01e-21	0.10
Average				0.09				0.09

[a] Coefficient of variation

Table C.28 Dimensions of individual I-beam

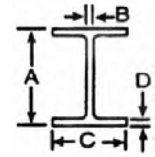

Dimension			Weight		Effective[a]	Recalculated weight[b]	
Symbol	in	cm	lb/ft	kg/m	cm	lb/ft	kg/m
A	12.19	30.96	13.75[c]	20.46	30.96	14.02	20.86
B	0.37	0.94			0.96		
C	8.08	20.52	35.24[d]	52.44	20.52	35.99	53.56
D	0.64	1.63			1.66		
Total			48.99	72.91		50.00	74.41

Source: South St. Paul Steel Supply Co. 2004

[a] Adjusted to yield 50 lb/ft, as specified by manufacturer

[b] Calculated weight per unit length, based on effective dimensions

[c] Calculated weight per foot of web, based on listed dimensions

[d] Calculated weight per foot of two flanges, based on listed dimensions

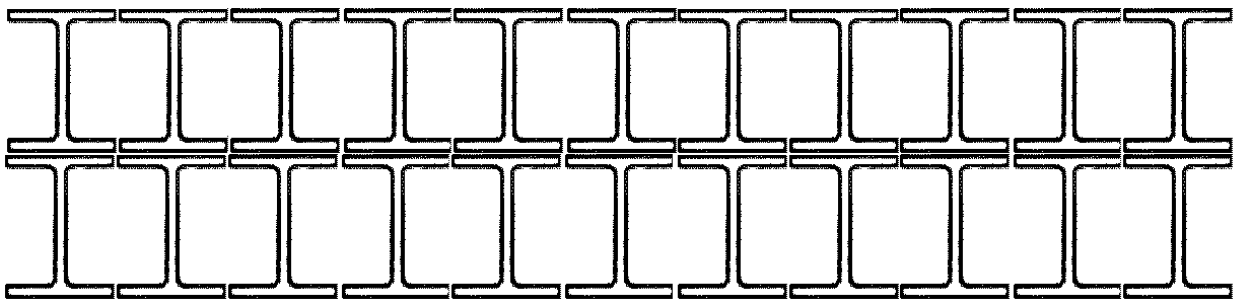

Figure C.7 Arrangement of I-beams (not to scale)

Table C.29 I-beam geometry (cm)

Location		X		Y-center of beams						Z	
		Min	Max							Min	Max
I-beams	1 – 6	-1219	0.0	-108.0	-86.4	-64.8	-43.2	-21.6	0.0	137.2	168.3
	7 – 11			21.6	43.2	64.8	86.4	108.0	0.0		
	12 – 17			-108.0	-86.4	-64.8	-43.2	-21.6	0.0	168.3	199.4
	18 – 22			21.6	43.2	64.8	86.4	108.0	0.0		

Table C.30 Steel product truck driver exposure geometry (cm)

Location	Thickness	X		Y		Z	
		Min	Max	Min	Max	Min	Max
Truck cab—aluminum	0.3175	153.0	363.9	-121.9	121.9	66.5	245.4
Trailer floor—aluminum[a]	3.175	-1219.2	0.0	-121.9	121.9	134.0	137.2
Pavement—concrete	40.64					-40.6	0.0
Tally points (TP)	1	243.8		61.0		168.4	
	2	335.3					

[a] Floor is extruded aluminum honeycomb, estimated effective density = 1 g/cm^3

The results of the analysis are presented in Table C.31. The dose rates from the 12 monoenergetic photon sources and 6 **$**-emitting nuclides that partition to steel are computed by MCNP at the two locations specified in Table C.30. Because of the strong absorption of low-energy photons by the walls of the truck cab, the effective dose equivalent rates from the 10 keV source are too low to be statistically meaningful and are therefore not listed. The average of the dose rates at the two tally points is adopted as the dose rate from each of the sources. $\overline{C_v}$ is calculated on the basis of all the sources. Based on these results, U_x for the driver of the steel truck is assigned a uniform distribution: 0.7 # U_x # 1.3.

Table C.31 Dose rates to truck driver hauling steel products

Energy (MeV) or nuclide	Effective dose equivalent (Sv/s per Bq/g)				Effective dose (Sv/s per Bq/g)			
	TP 1	TP 2	Mean	C_v[a]	TP 1	TP 2	Mean	C_v[a]
0.010	—	—	—	—	6.46e-29	4.21e-29	5.34e-29	0.30
0.015	6.65e-21	4.17e-21	5.41e-21	0.32	4.01e-21	2.52e-21	3.27e-21	0.32
0.020	2.71e-18	1.63e-18	2.17e-18	0.35	9.55e-19	5.74e-19	7.65e-19	0.35
0.030	1.49e-16	8.96e-17	1.19e-16	0.35	8.41e-17	5.04e-17	6.73e-17	0.35
0.050	2.42e-15	1.49e-15	1.96e-15	0.34	1.89e-15	1.16e-15	1.53e-15	0.34
0.070	9.74e-15	6.23e-15	7.99e-15	0.31	8.40e-15	5.35e-15	6.88e-15	0.31
0.100	3.59e-14	2.33e-14	2.96e-14	0.30	3.23e-14	2.09e-14	2.66e-14	0.30
0.200	2.38e-13	1.55e-13	1.97e-13	0.30	2.19e-13	1.42e-13	1.81e-13	0.30
0.500	9.78e-13	6.20e-13	7.99e-13	0.32	9.12e-13	5.77e-13	7.45e-13	0.32
1.0	2.12e-12	1.32e-12	1.72e-12	0.33	1.99e-12	1.23e-12	1.61e-12	0.33
2.0	4.23e-12	2.59e-12	3.41e-12	0.34	3.98e-12	2.43e-12	3.21e-12	0.34
5.0	9.16e-12	5.52e-12	7.34e-12	0.35	8.50e-12	5.13e-12	6.82e-12	0.35
C-14	3.34e-18	2.61e-18	2.98e-18	0.17	2.83e-18	2.17e-18	2.50e-18	0.19
P-32	1.04e-14	6.79e-15	8.60e-15	0.30	9.58e-15	6.26e-15	7.92e-15	0.30
S-35	3.55e-18	2.19e-18	2.87e-18	0.34	2.97e-18	1.84e-18	2.41e-18	0.33
Tc-99	5.50e-17	3.56e-17	4.53e-17	0.30	4.90e-17	3.18e-17	4.04e-17	0.30
W-185	1.49e-16	9.70e-17	1.23e-16	0.30	1.35e-16	8.73e-17	1.11e-16	0.30
Tl-204	9.45e-16	5.94e-16	7.70e-16	0.32	8.64e-16	5.42e-16	7.03e-16	0.32
Average				0.31				0.32

[a] Coefficient of variation

C.2.9 Cement Basement

The cement basement is 24 ft × 24 ft (7.3 × 7.3 m) on the inside, with 8-ft (2.4-m) high walls. The floor and exterior walls are 8-in (20-cm) thick concrete; the radiation sources are uniformly distributed throughout the concrete. The basement is divided into four rooms of equal size; the interior walls are made of ½-inch-thick gypsum board, for a total effective thickness of 1 inch (2.54 cm). The ceiling is also ½-inch (1.3 cm) gypsum board, above which is a 7½-inch (19-cm) air space and a ¾-inch (1.9 cm) wood floor. The floor and outer walls are surrounded by soil. The details of the exposure geometry are presented in Table C.32. The dose rates are assessed at two tally points. One is in the center of one of the rooms, while the other is nearer to the center

of the basement, 1 m from each of the two interior walls. Since the person is surrounded by the walls, the rotational geometry (ROT) is used in the MCNP analysis.

Table C.32 Basement dweller exposure geometry (cm)

Location		Thickness	X		Y		Z	
			Min	Max	Min	Max	Min	Max
Floor—concrete		20.3	-386.0	386.1	-386.0	386.1	-20.0	0.0
Exterior walls—concrete	1	20.3	-386.0	386.1	-386.0	-365.8	0.0	243.8
	2	20.3	-386.0	-365.8	-386.0	386.1	0.0	243.8
	3	20.3	-386.0	386.1	365.8	386.1	0.0	243.8
	4	20.3	365.8	386.1	-386.0	386.1	0.0	243.8
Interior wall—gypsum	1	2.54	-365.8	365.8	-1.3	1.3	0.0	243.8
	2	2.54	-1.3	1.3	-365.8	365.8	0.0	243.8
Ceiling	gypsum	1.3	-365.8	365.8	-365.8	365.8	243.8	245.1
	wood	1.9	-365.8	365.8	-365.8	365.8	259.1	261.0
Soil (outside)							-4	243.8
Tally points		1	100		100		100	
		2	166		166			

The results of the analysis are presented in Table C.33, which lists the dose rates from the 12 monoenergetic photon sources and from the bremsstrahlung from the **$** decay of 14 selected nuclides. These 14 nuclides are isotopes of elements that partition strongly to steel slag. The average of the dose rates at the two tally points is adopted as the dose rate from each of the sources. $\overline{C_v}$ is calculated on the basis of all the sources. Based on these results, U_x for the cement basement is assigned a uniform distribution: 0.9 # U_x # 1.1.

C.2.10 House with Steel Studs

The model for the house built with steel studs is a small single-story house that is similar to the cement basement in size and construction. It measures 24 ft × 24 ft (7.3 × 7.3 m) with 8-ft (2.4-m) high walls, and is divided into four rooms of equal size. The ceiling and the walls of each room consist of ½-in (1.3-cm) gypsum board. The attic floor, consisting of ¾-in (1.9-cm) plywood, is 8 inches (20 cm) above the ceiling. The outside of the exterior walls is covered with ¾-inch particle board (modeled as plywood). This stylized house resembles a garage that was turned into living space.

Both the interior and exterior walls are attached to a total of 109 studs made of SAE 1020 steel, mounted on 16-inch (40-cm) centers. The studs are U-channels, 3.62 in (9.2 cm) across the base and 1.62 in (4.12 cm) on the sides; the metal is 0.098 cm thick. The radiation sources are uniformly distributed throughout the steel. A cross-sectional view of one stud is shown in Figure C.8. A simplified floor plan of the house, showing the locations of the studs, is shown in Figure C.9.

Table C.33 Dose rates to cement basement dweller

Energy (MeV) or nuclide	Effective dose equivalent (Sv/s per Bq/g)				Effective dose (Sv/s per Bq/g)			
	TP 1	TP 2	Mean	C_v[a]	TP 1	TP 2	Mean	C_v[a]
0.010	1.53e-16	2.11e-16	1.82e-16	0.23	1.27e-16	1.76e-16	1.52e-16	0.23
0.015	2.55e-15	3.45e-15	3.00e-15	0.21	1.71e-15	2.32e-15	2.02e-15	0.21
0.020	1.14e-14	1.51e-14	1.33e-14	0.20	8.02e-15	1.06e-14	9.31e-15	0.20
0.030	6.58e-14	8.62e-14	7.60e-14	0.19	5.44e-14	7.13e-14	6.29e-14	0.19
0.050	4.77e-13	5.68e-13	5.23e-13	0.12	4.55e-13	5.42e-13	4.99e-13	0.12
0.070	1.38e-12	1.55e-12	1.47e-12	0.08	1.39e-12	1.56e-12	1.48e-12	0.08
0.100	3.33e-12	3.61e-12	3.47e-12	0.06	3.34e-12	3.62e-12	3.48e-12	0.06
0.200	1.09e-11	1.16e-11	1.13e-11	0.04	1.09e-11	1.16e-11	1.13e-11	0.04
0.500	3.39e-11	3.60e-11	3.50e-11	0.04	3.36e-11	3.57e-11	3.47e-11	0.04
1.0	7.22e-11	7.63e-11	7.43e-11	0.04	7.15e-11	7.56e-11	7.36e-11	0.04
2.0	1.45e-10	1.53e-10	1.49e-10	0.04	1.45e-10	1.53e-10	1.49e-10	0.04
5.0	3.36e-10	3.51e-10	3.44e-10	0.03	3.36e-10	3.51e-10	3.44e-10	0.03
P-32	1.77e-13	1.89e-13	1.83e-13	0.05	1.76e-13	1.88e-13	1.82e-13	0.05
S-35	1.61e-16	1.86e-16	1.74e-16	0.10	1.54e-16	1.77e-16	1.66e-16	0.10
Cl-36	2.30e-14	2.54e-14	2.42e-14	0.07	2.29e-14	2.53e-14	2.41e-14	0.07
Ca-45	8.70e-16	9.86e-16	9.28e-16	0.09	8.52e-16	9.62e-16	9.07e-16	0.09
Sr-89	1.34e-13	1.48e-13	1.41e-13	0.07	1.34e-13	1.47e-13	1.41e-13	0.07
Sr-90	9.46e-15	1.08e-14	1.01e-14	0.09	9.40e-15	1.07e-14	1.01e-14	0.09
Y-90	3.37e-13	3.78e-13	3.58e-13	0.08	3.35e-13	3.76e-13	3.56e-13	0.08
Y-91	1.49e-13	1.62e-13	1.56e-13	0.06	1.48e-13	1.62e-13	1.55e-13	0.06
Cs-135	1.18e-15	1.29e-15	1.24e-15	0.06	1.16e-15	1.27e-15	1.22e-15	0.06
Pm-147	4.28e-16	4.84e-16	4.56e-16	0.09	4.16e-16	4.69e-16	4.43e-16	0.08
Sm-151	4.91e-18	5.76e-18	5.34e-18	0.11	4.22e-18	4.77e-18	4.50e-18	0.09
Tm-171	1.36e-17	1.75e-17	1.56e-17	0.18	1.22e-17	1.54e-17	1.38e-17	0.16
W-185	3.65e-15	4.09e-15	3.87e-15	0.08	3.61e-15	4.05e-15	3.83e-15	0.08
Bk-249	4.17e-17	4.65e-17	4.41e-17	0.08	3.86e-17	4.27e-17	4.07e-17	0.07
Average				0.10				0.09

[a] Coefficient of variation

The details of the exposure geometry are presented in Table C.34. The dose rates are assessed at two tally points. One is in the center of one of the rooms, while the other is nearer to the center of the house, 1 m from each of the two interior walls. Since the studs surround each room, the rotational geometry (ROT) is used in the MCNP analysis.

The results of the analysis are presented in Table C.35, which lists the dose rates from the 12 monoenergetic photon sources and from the bremsstrahlung from the **$** decay of 6 selected nuclides. These 6 nuclides are isotopes of elements that partition strongly to steel. The average of the dose rates at the two tally points is adopted as the dose rate from each of the sources. $\overline{C_v}$

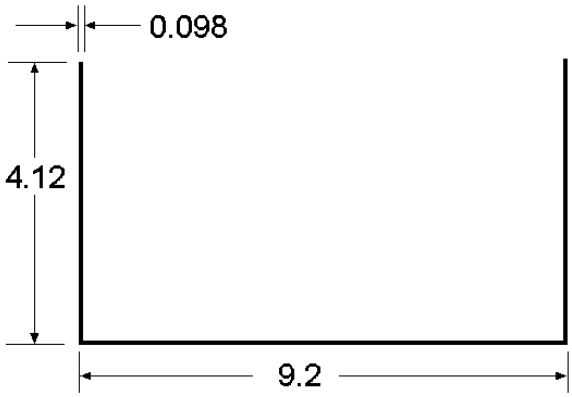

Figure C.8 Cross-section of steel stud (thickness not to scale)

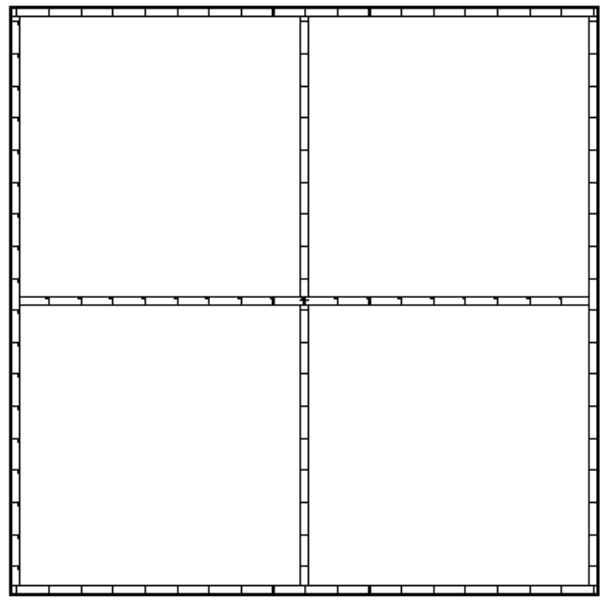

Figure C.9 Floor plan of steel-studded house

is calculated on the basis of all the sources. Based on these results, U_x for the home with steel studs is assigned a uniform distribution: 0.9 # U_x # 1.1.

Table C.34 Steel-studded house exposure geometry (cm)

Location		Thickness	X		Y		Z	
			Min	Max	Min	Max	Min	Max
Wall—gypsum	1	1.3	-363.7	363.7	-361.2	-359.9	0.0	243.8
	2	1.3	-361.2	-359.9	-363.7	363.7	0.0	243.8
	3	1.3	-363.7	363.7	359.9	361.2	0.0	243.8
	4	1.3	359.9	361.2	359.9	361.2	0.0	243.8
	5	1.3	-363.7	363.7	-5.9	-4.6	0.0	243.8
	6	1.3	-5.9	-4.6	-363.7	363.7	0.0	243.8
	7	1.3	-363.7	363.7	5.9	4.6	0.0	243.8
	8	1.3	5.9	4.6	-363.7	363.7	0.0	243.8
Ceiling gypsum		1.3	-370.4	-361.2	-370.4	-361.2	243.8	245.1
Attic floor—wood		1.9	-370.4	-361.2	-370.4	-361.2	265.4	267.3
Wall—wood	1	1.9	-372.3	372.3	-372.3	-370.4	0.0	267.3
	2	1.9	-372.3	-370.4	-372.3	372.3	0.0	267.3
	3	1.9	-372.3	372.3	370.4	372.3	0.0	267.3
	4	1.9	370.4	372.3	-372.3	372.3	0.0	267.3
Concrete base slab		20.3	-372.3	372.3	-372.3	372.3	-20.3	0.0
Tally points (TP)		1	106		106		100	
		2	160		160			

Table C.35 Dose rates in steel-studded house

Energy (MeV) or nuclide	Effective dose equivalent (Sv/s per Bq/g)				Effective dose (Sv/s per Bq/g)			
	TP 1	TP 2	Mean	C_v[a]	TP 1	TP 2	Mean	C_v[a]
0.010	1.75e-31	1.65e-31	1.70e-31	0.04	1.46e-31	1.38e-31	1.42e-31	0.04
0.015	3.41e-21	3.59e-21	3.50e-21	0.04	2.29e-21	2.41e-21	2.35e-21	0.04
0.020	4.12e-18	4.28e-18	4.20e-18	0.03	2.90e-18	3.02e-18	2.96e-18	0.03
0.030	5.79e-16	5.48e-16	5.64e-16	0.04	4.79e-16	4.53e-16	4.66e-16	0.04
0.050	1.29e-14	1.13e-14	1.21e-14	0.09	1.23e-14	1.08e-14	1.16e-14	0.09
0.070	4.39e-14	3.75e-14	4.07e-14	0.11	4.47e-14	3.81e-14	4.14e-14	0.11
0.100	1.04e-13	8.75e-14	9.58e-14	0.12	1.04e-13	8.76e-14	9.58e-14	0.12
0.200	2.93e-13	2.44e-13	2.69e-13	0.13	2.93e-13	2.44e-13	2.69e-13	0.13
0.5	7.49e-13	6.13e-13	6.81e-13	0.14	7.41e-13	6.07e-13	6.74e-13	0.14
1.0	1.37e-12	1.12e-12	1.25e-12	0.14	1.36e-12	1.11e-12	1.24e-12	0.14
2.0	2.35e-12	1.91e-12	2.13e-12	0.15	2.35e-12	1.91e-12	2.13e-12	0.15
5.0	4.70e-12	3.72e-12	4.21e-12	0.16	4.70e-12	3.72e-12	4.21e-12	0.16
C-14	1.12e-17	9.95e-18	1.06e-17	0.08	1.09e-17	9.70e-18	1.03e-17	0.08
P-32	1.09e-14	9.21e-15	1.01e-14	0.12	1.09e-14	9.17e-15	1.00e-14	0.12
S-35	1.26e-17	1.06e-17	1.16e-17	0.12	1.24e-17	1.04e-17	1.14e-17	0.12
Tc-99	1.45e-16	1.22e-16	1.34e-16	0.12	1.44e-16	1.22e-16	1.33e-16	0.12
W-185	3.20e-16	2.72e-16	2.96e-16	0.11	3.19e-16	2.71e-16	2.95e-16	0.12
Tl-204	1.43e-15	1.22e-15	1.33e-15	0.11	1.42e-15	1.22e-15	1.32e-15	0.11
Average				0.10				0.10

[a] Coefficient of variation

C.2.11 Auto—Cast Iron Engine Block

The exposure geometry of an automobile with a cast iron engine block is based on a 2002 model Chevrolet Impala sedan, a vehicle commonly used as a taxicab. The overall dimensions are based on information presented by the General Motors Corp. (n/d). In this simplified model, the cabin of the automobile is represented by a rectangular box made of 0.03-in (0.076-cm) sheet metal. The top and sides of the hood are made of the same sheet metal—the front is open while the back abuts the wall of the cabin. Underneath the engine is a ⅛-in (0.32-cm) oil pan. The sheet metal and oil pan are SAE 1020 steel.

The following detailed information on the dimensions and location of the engine block are based on measurements by an SC&A staff member. These observations are illustrated in Figure C.10.

- The distance between the engine block and the firewall is approximately 8.5 in (21.6 cm).
- The firewall is about 1.5 inches (3.8 cm) thick.[11]

[11] Used to estimate overall distance between driver and engine. The lightweight insulating material is not included in the MCNP calculation.

- The distance from the firewall to the center of the driver's torso is approximately 39 inches (99 cm) with the seat in the forward-most position and 43 inches (109 cm) with the seat in the rear-most position. Total distance between the engine block and the driver, therefore, ranges between approximately 49 and 53 inches (~125 – 135 cm).

The mass of the engine block is 163 lb (73.9 kg) (GMPartsDirect.com [n/d]). The dimensions of the block, as shown in Figure C.10 are 22 × 16 × 19 inches (56 × 40 × 48 cm). The effective density, $\frac{\mathbf{M}}{\mathbf{V}}$ = 0.688 g/cm^3.

The radiation sources are uniformly distributed throughout the volume of the block.

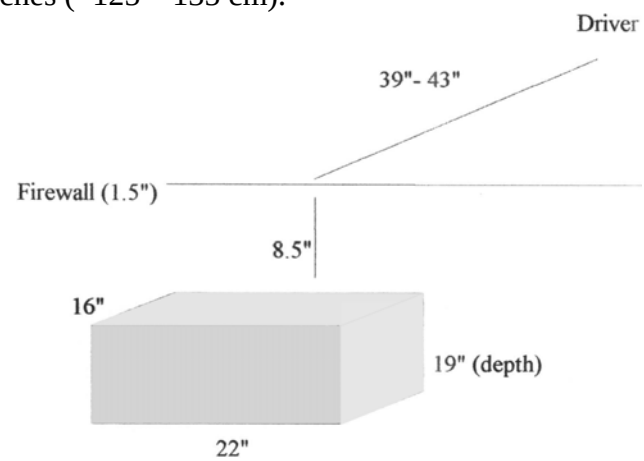

Figure C.10 Engine block exposure geometry

The detailed geometry is presented in Table C.36. The tally points for the MCNP analysis correspond to the forward and rear positions of the driver. Since the engine is in front of the driver, the anteroposterior (AP) irradiation geometry is used in the analysis.

Table C.36 Engine block exposure geometry (cm)

Location	Thickness	X		Y		Z	
		Min	Max	Min	Max	Min	Max
Block		102.0	142.0	-28.0	28	30.48	78.5
Hood	0.076	0.0	167.6	-91.4	91.44	15.24	91.44
Oil pan	0.32	101.6	142.2	-28.0	27.94	14.9225	15.24
Cabin	0.076	167.6	381.0	-91.4	91.44	15.24	142.24
Concrete	4					-4	0
Tally points	1	226		35.6		55.9	
	2	236					

The results of the analysis are presented in Table C.37, which lists the dose rates from the 12 monoenergetic photon sources and from the bremsstrahlung from the **$** decay of 6 selected nuclides. These 6 nuclides are isotopes of elements that partition strongly to cast iron. The average of the dose rates at the two tally points is adopted as the dose rate from each of the sources. $\overline{C_v}$ is calculated on the basis of all the sources. Based on these results, U_x for the driver of an automobile with a cast iron engine block is assigned a uniform distribution: 0.9 # U_x # 1.1.

C.2.12 Diesel Truck

The diesel truck, like the automobile in the preceding section, has a cast iron engine block. The dimensions of this truck are partially based on the Kenworth Model T2000 (Kenworth 2001). The truck is equipped with a sleeper berth, as are most operator-owned highway trucks used for long-distance hauls. Detailed mechanical specifications for the Model T2000 were not readily

available. Specifications for a comparable truck, the Peterbilt Model 362, are used to construct the model in the present analysis (Peterbilt and Kenworth are both divisions of PACCAR, Inc.) At the time of this analysis, one of Peterbilt's engine suppliers was Cummins, Inc., which in turn obtained engine blocks from Golden Casting.[12] Golden Casting made 12 L to 15 L engine blocks, the heaviest of which weighed 800 lb (362.9 kg) (Brezonick 1999). The Cummins Signature (15 L) engine block is 41 inches long, 21.75 inches wide, and 30 inches high (104.1 × 55.25 × 76.2 cm).[13] Such a block has an effective density of 0.8277 g/cm^3.

Table C.37 Dose rates to driver of automobile with cast iron engine block

Energy (MeV) or nuclide	Effective dose equivalent (Sv/s per Bq/g)				Effective dose (Sv/s per Bq/g)			
	TP 1	TP 2	Mean	C_v[a]	TP 1	TP 2	Mean	C_v[a]
0.010	1.28e-33	1.28e-33	1.28e-33	0.00	1.64e-33	1.63e-33	1.64e-33	0.00
0.015	2.69e-32	2.67e-32	2.68e-32	0.01	3.39e-32	3.36e-32	3.38e-32	0.01
0.020	2.39e-23	2.25e-23	2.32e-23	0.04	2.77e-23	2.61e-23	2.69e-23	0.04
0.030	6.30e-18	5.59e-18	5.95e-18	0.08	6.91e-18	6.13e-18	6.52e-18	0.08
0.050	1.62e-15	1.38e-15	1.50e-15	0.11	1.74e-15	1.48e-15	1.61e-15	0.11
0.070	1.01e-14	8.51e-15	9.31e-15	0.12	1.03e-14	8.71e-15	9.51e-15	0.12
0.100	4.05e-14	3.44e-14	3.75e-14	0.12	4.17e-14	3.54e-14	3.86e-14	0.12
0.200	2.50e-13	2.13e-13	2.32e-13	0.11	2.57e-13	2.19e-13	2.38e-13	0.11
0.500	8.65e-13	7.38e-13	8.02e-13	0.11	8.92e-13	7.61e-13	8.27e-13	0.11
1.0	1.67e-12	1.42e-12	1.55e-12	0.11	1.71e-12	1.46e-12	1.59e-12	0.11
2.0	2.93e-12	2.49e-12	2.71e-12	0.12	2.99e-12	2.54e-12	2.77e-12	0.12
5.0	5.63e-12	4.79e-12	5.21e-12	0.11	5.86e-12	4.97e-12	5.42e-12	0.12
C-14	3.17e-18	2.68e-18	2.93e-18	0.12	3.29e-18	2.79e-18	3.04e-18	0.12
P-32	1.02e-14	8.67e-15	9.44e-15	0.12	1.05e-14	8.94e-15	9.72e-15	0.11
S-35	3.33e-18	2.82e-18	3.08e-18	0.12	3.46e-18	2.93e-18	3.20e-18	0.12
Tc-99	3.48e-17	2.96e-17	3.22e-17	0.11	3.60e-17	3.05e-17	3.33e-17	0.12
W-185	1.55e-16	1.32e-16	1.44e-16	0.11	1.60e-16	1.36e-16	1.48e-16	0.12
Tl-204	1.02e-15	8.69e-16	9.45e-16	0.11	1.05e-15	8.96e-16	9.73e-16	0.11
Average				0.10				0.10

[a] Coefficient of variation

The truck in the present analysis has an aluminum cab and a hood made of a fiberglass-resin composite (composites and aluminum are used in the Peterbilt Model 387). The radiator grille is aluminum with an assumed effective thickness of ⅛ inch (0.32 cm). The oil pan is ⅛-inch-thick SAE 1020 steel.

[12] The Golden Casting Corporation is now in bankruptcy. An auction of its gray iron casting facility in Columbus, IN was held on May 4, 2004.

[13] Mike Kell, Cummins, Inc., private communication with Kathleen Behling, SC&A, Inc., March 27, 2002.

Dose rates are calculated for a total of four positions. Two (TP 1 and 2) correspond to the driver position in the driver's seat, at the closest and furthest distance from the engine, while the other two (TP 3 and 4) are for the corresponding positions in the sleeper. Since the driver faces the engine while driving, the dose calculations for the driver's seat utilize the anteroposterior (AP) irradiation geometry. The driver's orientation in the sleeper berth corresponds to the rotational (ROT) geometry.

Table C.38 Diesel truck driver exposure geometry (cm)

Location	Thickness	X		Y		Z	
		Min	Max	Min	Max	Min	Max
Engine block		312.7	368.0	-52.1	52.1	45.7	121.9
Truck cab—aluminum	0.32	0.0	287.0	-106.7	106.7	127.0	391.2
Hood—composite	0.318	287.0	467.4	-76.2	76.2	31.8	200.7
Radiator grille—aluminum	0.318	467.0	467.4	-76.2	76.2	31.8	200.7
Oil pan—SAE 1020 steel	0.318	312.7	368.0	-52.1	52.1	45.4	45.7
Pavement—concrete	40.6					-40.6	0.0
Tally points (TP)	1		205.7	79.38		180.3	
	2		172.7				
	3		95.3	0.00		203.2	
	4		114.3				

Note: All dimensions are external

The results of the analysis for the driver's seat are presented in Table C.39, while the corresponding analysis for the sleeper is shown in Table C.40. The structure of these tables is similar to that of Table C.37, which is discussed in the previous section. Based on the present results, U_x for the driver's seat is assigned a uniform distribution: 0.8 # U_x # 1.2, while for the sleeper berth, 0.9 # U_x # 1.1.

C.2.13 Hull Plate

The exposure to a steel hull plate on a ship is based on the model described by Anigstein et. al (2001, Appendix H2). The plate is 20 ft wide, 10 ft high, and ⅜ inch thick (6.1 m × 3.05 m × 0.95 cm). The exposed individual is in a compartment that is 7.5 ft high, and 20 × 20 ft square (2.29 × 6.1 × 6.1 m). The other five sides are ¼ inch (0.63 cm) thick. The compartment is centered on the hull plate. The hull and the sides of the compartment (bulkheads and decks) are made of SAE 1020 steel. Radioactive sources are uniformly distributed throughout the steel hull plate—the rest of the compartment is not made from cleared material. In assessments of sources with energies # 0.1 MeV, the compartment is filled with moist air. This simple model ignores scattering of radiation from the rest of the ship and from the environment outside the hull.

Three tally points—corresponding to a sailor sleeping on a bunk next to the hull—are centered on the plate at distances of 18, 24, and 30 inches (46, 61, and 76 cm). Another tally location, corresponding to a lounge area, is in the center of the compartment, 1 m above the floor. Since

the sailor's orientation to the hull plate would vary, rotational (ROT) geometry is utilized in the dose calculations.

Table C.39 Dose rates in driver's seat of truck with cast iron diesel engine block

Energy (MeV) or nuclide	Effective dose equivalent (Sv/s per Bq/g)				Effective dose (Sv/s per Bq/g)			
	TP 1	TP 2	Mean	C_v[a]	TP 1	TP 2	Mean	C_v[a]
0.010	1.21e-29	2.15e-29	1.68e-29	0.40	9.43e-30	1.68e-29	1.31e-29	0.40
0.015	1.08e-20	8.75e-21	9.78e-21	0.15	8.59e-21	6.97e-21	7.78e-21	0.15
0.020	4.91e-18	3.12e-18	4.02e-18	0.32	4.23e-18	2.69e-18	3.46e-18	0.32
0.030	3.26e-16	2.22e-16	2.74e-16	0.27	2.97e-16	2.02e-16	2.50e-16	0.27
0.050	4.50e-15	3.37e-15	3.94e-15	0.20	4.18e-15	3.13e-15	3.66e-15	0.20
0.070	1.56e-14	1.20e-14	1.38e-14	0.18	1.52e-14	1.16e-14	1.34e-14	0.19
0.100	5.02e-14	3.91e-14	4.47e-14	0.18	4.87e-14	3.79e-14	4.33e-14	0.18
0.200	2.82e-13	2.22e-13	2.52e-13	0.17	2.75e-13	2.16e-13	2.46e-13	0.17
0.500	1.07e-12	8.44e-13	9.57e-13	0.17	1.04e-12	8.19e-13	9.30e-13	0.17
1.0	2.23e-12	1.74e-12	1.99e-12	0.18	2.17e-12	1.70e-12	1.94e-12	0.17
2.0	4.15e-12	3.24e-12	3.70e-12	0.17	4.05e-12	3.16e-12	3.61e-12	0.18
5.0	8.47e-12	6.59e-12	7.53e-12	0.18	8.14e-12	6.34e-12	7.24e-12	0.18
C-14	5.17e-18	3.96e-18	4.57e-18	0.19	4.93e-18	3.78e-18	4.36e-18	0.19
P-32	1.13e-14	8.97e-15	1.01e-14	0.16	1.09e-14	8.70e-15	9.80e-15	0.16
S-35	5.60e-18	4.20e-18	4.90e-18	0.20	5.34e-18	4.00e-18	4.67e-18	0.20
Tc-99	7.19e-17	5.57e-17	6.38e-17	0.18	6.94e-17	5.38e-17	6.16e-17	0.18
W-185	1.81e-16	1.43e-16	1.62e-16	0.17	1.75e-16	1.38e-16	1.57e-16	0.17
Tl-204	1.15e-15	9.08e-16	1.03e-15	0.17	1.12e-15	8.80e-16	1.00e-15	0.17
Average				0.20				0.20

[a] Coefficient of variation

The results of the analysis are presented in Tables C.41 and C.42. The dose rates from the 12 monoenergetic photon sources are computed by MCNP at the three locations corresponding to the sailor in the bunk, as well as in the lounge area. The average of the dose rates at the three tally points is adopted as the dose rate in the bunk from each of the 12 photon sources. $\overline{C_v}$ for this location is calculated on the basis of all 12 sources. Based on these results, U_x for the sailor in the bunk is assigned a uniform distribution: 0.87 # U_x # 1.13. U_x for the center location is assigned the fixed value, $U_x = 1$.

The bremsstrahlung from the six **$**-emitting nuclides listed in Table C.42 is calculated only at the middle position in the bunk and in the lounge area. These six nuclides are isotopes of elements that partition strongly to the steel.

C.2.14 Steel Ship

The AOE-6 fast combat support ship, illustrated in Figure C.11, serves as the basis for the steel ship model. Although far more complex and sophisticated than the simple model employed in

the assessment of a single hull plate, described in Section C.2.13, the model employed in the present analysis is still a vast simplification of the actual ship. Figure C.12 illustrates the simplified model used in the present analysis.

Table C.40 Dose rates in sleeper berth of truck with cast iron diesel engine block

Energy (MeV) or nuclide	Effective dose equivalent (Sv/s per Bq/g)				Effective dose (Sv/s per Bq/g)			
	TP 1	TP 2	Mean	C_v[a]	TP 1	TP 2	Mean	C_v[a]
0.010	2.19e-29	2.14e-29	2.17e-29	0.02	1.83e-29	1.79e-29	1.81e-29	0.02
0.015	3.57e-21	4.24e-21	3.91e-21	0.12	2.40e-21	2.85e-21	2.63e-21	0.12
0.020	8.89e-19	1.14e-18	1.01e-18	0.18	6.27e-19	8.02e-19	7.15e-19	0.17
0.030	6.36e-17	7.86e-17	7.11e-17	0.15	5.26e-17	6.50e-17	5.88e-17	0.15
0.050	1.15e-15	1.34e-15	1.25e-15	0.11	1.10e-15	1.28e-15	1.19e-15	0.11
0.070	4.46e-15	5.13e-15	4.80e-15	0.10	4.54e-15	5.23e-15	4.89e-15	0.10
0.100	1.57e-14	1.79e-14	1.68e-14	0.09	1.57e-14	1.79e-14	1.68e-14	0.09
0.200	9.52e-14	1.08e-13	1.02e-13	0.09	9.52e-14	1.08e-13	1.02e-13	0.09
0.500	3.88e-13	4.41e-13	4.15e-13	0.09	3.85e-13	4.37e-13	4.11e-13	0.09
1.0	8.42e-13	9.57e-13	9.00e-13	0.09	8.34e-13	9.48e-13	8.91e-13	0.09
2.0	1.63e-12	1.86e-12	1.75e-12	0.09	1.63e-12	1.86e-12	1.75e-12	0.09
5.0	3.44e-12	3.91e-12	3.68e-12	0.09	3.44e-12	3.91e-12	3.68e-12	0.09
C-14	1.44e-18	1.67e-18	1.56e-18	0.11	1.42e-18	1.64e-18	1.53e-18	0.10
P-32	3.99e-15	4.54e-15	4.27e-15	0.09	3.97e-15	4.52e-15	4.25e-15	0.09
S-35	1.51e-18	1.75e-18	1.63e-18	0.10	1.49e-18	1.72e-18	1.61e-18	0.10
Tc-99	2.23e-17	2.55e-17	2.39e-17	0.09	2.22e-17	2.54e-17	2.38e-17	0.10
W-185	5.81e-17	6.62e-17	6.22e-17	0.09	5.80e-17	6.61e-17	6.21e-17	0.09
Tl-204	3.83e-16	4.36e-16	4.10e-16	0.09	3.82e-16	4.35e-16	4.09e-16	0.09
Average				0.10				0.10

[a] Coefficient of variation

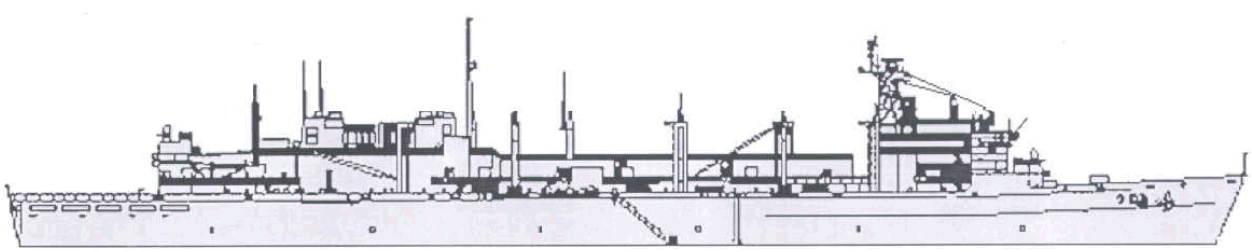

Figure C.11 AOE-6 class fast combat support ship (starboard view)

C.2.14.1 General Description

A general description of the AOE-6 class ship is provided in this section. Not all of the features discussed below are included in the model.

- The main propulsion system (LM2500 gas turbines) is housed in two engine rooms, which are located directly below the fore and aft gas turbine exhaust stacks.

Table C.41 Dose rates from steel hull plate

Energy (MeV)	Effective dose equivalent (Sv/s per Bq/g)						Effective dose (Sv/s per Bq/g)					
	41 cm	61 cm	76 cm	Mean	C_v[a]	Center	41 cm	61 cm	76 cm	Mean	C_v[a]	Center
0.010	4.74e-17	3.65e-17	2.88e-17	3.76e-17	0.25	1.86e-18	3.96e-17	3.05e-17	2.40e-17	3.14e-17	0.25	1.56e-18
0.015	4.13e-16	3.58e-16	3.13e-16	3.61e-16	0.14	5.67e-17	2.79e-16	2.41e-16	2.11e-16	2.44e-16	0.14	3.81e-17
0.020	1.55e-15	1.38e-15	1.22e-15	1.38e-15	0.12	2.77e-16	1.10e-15	9.71e-16	8.62e-16	9.78e-16	0.12	1.96e-16
0.030	7.95e-15	7.10e-15	6.35e-15	7.13e-15	0.11	1.61e-15	6.59e-15	5.89e-15	5.26e-15	5.91e-15	0.11	1.33e-15
0.050	4.87e-14	4.37e-14	3.92e-14	4.39e-14	0.11	1.03e-14	4.68e-14	4.20e-14	3.77e-14	4.22e-14	0.11	9.89e-15
0.070	1.54e-13	1.39e-13	1.25e-13	1.39e-13	0.10	3.33e-14	1.58e-13	1.42e-13	1.28e-13	1.43e-13	0.11	3.41e-14
0.100	5.02e-13	4.52e-13	4.07e-13	4.54e-13	0.10	1.08e-13	5.02e-13	4.52e-13	4.07e-13	4.54e-13	0.10	1.08e-13
0.200	2.56e-12	2.29e-12	2.05e-12	2.30e-12	0.11	5.27e-13	2.56e-12	2.29e-12	2.05e-12	2.30e-12	0.11	5.27e-13
0.500	8.88e-12	7.86e-12	6.96e-12	7.90e-12	0.12	1.67e-12	8.78e-12	7.77e-12	6.88e-12	7.81e-12	0.12	1.66e-12
1.0	1.80e-11	1.57e-11	1.38e-11	1.58e-11	0.13	3.14e-12	1.78e-11	1.56e-11	1.37e-11	1.57e-11	0.13	3.11e-12
2.0	3.30e-11	2.85e-11	2.48e-11	2.88e-11	0.14	5.43e-12	3.30e-11	2.86e-11	2.48e-11	2.88e-11	0.14	5.44e-12
5.0	6.69e-11	5.74e-11	4.96e-11	5.80e-11	0.15	1.07e-11	6.69e-11	5.73e-11	4.96e-11	5.79e-11	0.15	1.06e-11
Average					0.13						0.13	

[a] Coefficient of variation

Table C.42 Dose rates from $ bremsstrahlung from steel hull plate

Nuclide	Effective dose equivalent (Sv/s per Bq/g)		Effective dose (Sv/s per Bq/g)	
	Bunk (61 cm)	Lounge (center)	Bunk (61 cm)	Lounge (center)
C-14	6.01e-17	1.29e-17	5.80e-17	1.24e-17
P-32	9.40e-14	2.06e-14	9.35e-14	2.05e-14
S-35	5.81e-17	1.39e-17	5.62e-17	1.35e-17
Tc-99	6.82e-16	1.61e-16	6.76e-16	1.60e-16
W-185	1.69e-15	3.95e-16	1.69e-15	3.92e-16
Tl-204	1.02e-14	2.34e-15	1.02e-14	2.35e-15

- Additional engineering spaces and some auxiliary spaces are located forward and aft of the engine rooms.
- The areas forward of the engineering spaces, and below the main deck, are dedicated primarily to combat stores.
- Crew berthing is located in the forward superstructure and in the uppermost deck area below the forward superstructure.
- The aft superstructure, aft of the exhaust stacks, houses the ship's three helicopters.
- Ship operations, communications, and other command and control functions are directed from watch stations in the forward superstructure, above the berthing compartments.
- The ship, below the main deck, may be modeled as a series of similarly-structured (generic) compartments. Specific compartments will vary in some structural details.

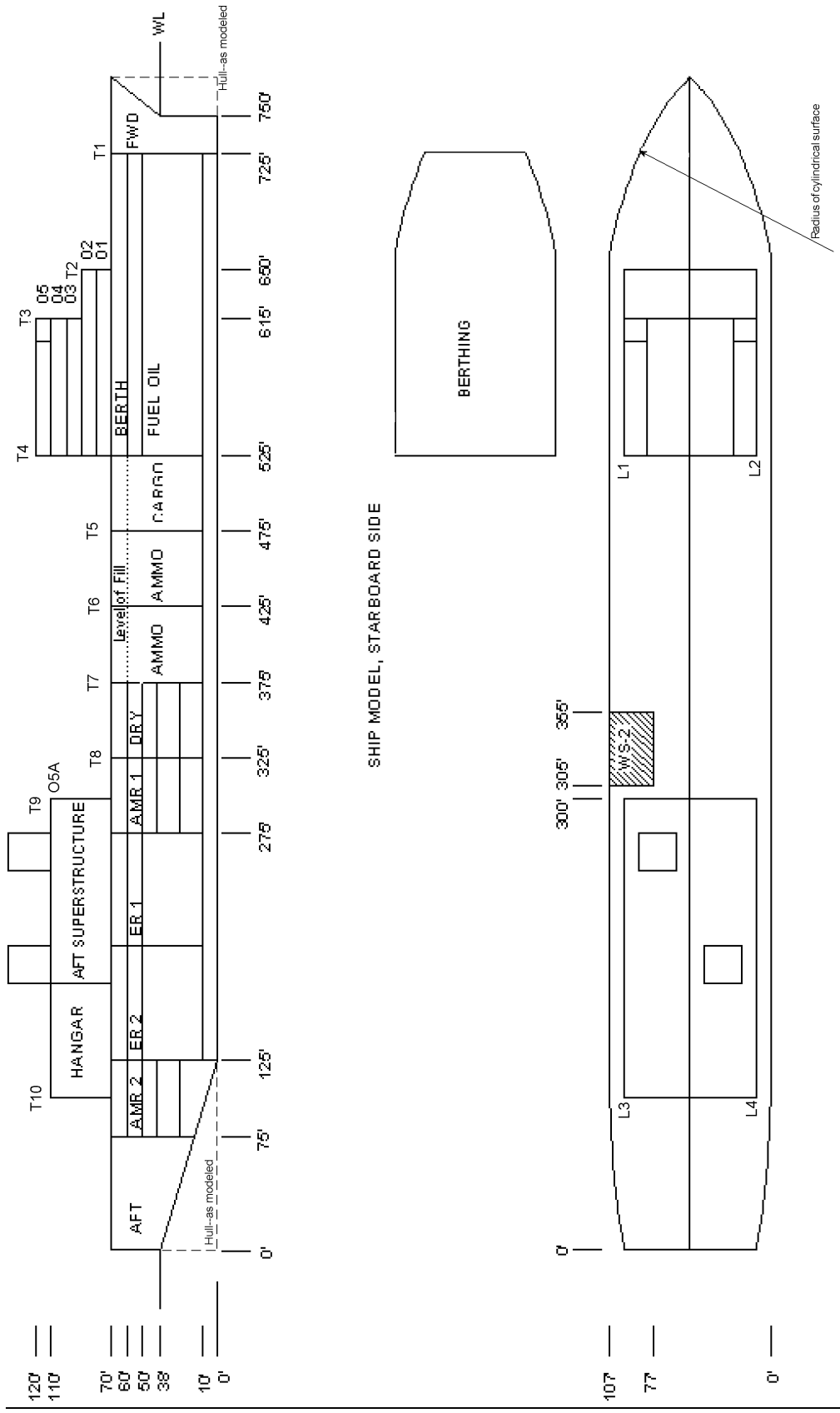

Figure C.12 Schematic diagrams of ship model

Each generic compartment extends across the beam (107 ft [32.6 m] at the waterline) of the ship, and is 50 ft [15 m] long. The compartment height from keel to main deck is 70 ft (21 m). The ship comprises six such compartments. One large compartment is devoted to cargo fuel oil storage, and is 200 ft (61 m) long. Two compartments house the engine rooms—each is 75 ft (23 m) long. Additional compartments forward and aft have smaller dimensions as the ship's beam tapers.[14] Each compartment contains a number of decks below the main deck. Nominal deck-to-overhead height is 10 feet (3.05 m). Spaces below the bottom (fourth) deck are usually filled with propulsion fuel for the ship, lubricating and hydraulic fluids, potable water, sanitary tanks, and other fluids, and to an inner-bottom void.

C.2.14.2 Compartment Densities

Specific compartments can be characterized in terms of the density of materials (specific gravity) and components ("objects") contained therein, as follows:[15]

- Berthing and superstructure watch station areas: 95% air, 5% objects. The objects (bunks, lockers, desks, chairs, and tables) comprise 50% aluminum and 20% steel by weight. The remaining 30% of objects (linens, clothes, insulation) have a specific gravity of 1.5.

- Shops, pump rooms, steerage: 90% air, 10% objects. The objects comprise 90% steel and 10% aluminum by weight.

- Auxiliary, engine room, and forward and aft compartments: 85% air, 15% objects. The objects comprise 90% steel and 10% aluminum by weight.

- The area of the aft superstructure through which the gas exhaust stacks pass contains a gas exhaust stack, which is steel, about ⅛ inch (0.3 cm) thick. The remaining part of the aft superstructure forward of the hangar is 90% air, 10% objects; the objects are 80% steel, 10% aluminum, and 10% miscellaneous, including nylon ropes, wood, lubricants.

- Dry-refrigerated storage: 85% air, 15% objects. The objects have a specific gravity of 1.5. The objects are primarily food and associated packaging, which is typically aluminum, steel and cardboard containers.

- Cargo storage: 60% air, 40% objects. The objects comprise 95% steel and 5% packing (e.g., wood) by weight.

---

[14] General information related to compartment size and ship construction details provided by U.S. Navy personnel from Naval Warfare Support Center (NWSC) Carderock Division (hereafter Carderock) during a meeting with NRC and SC&A staff, January 30, 2003.

[15] NWSC Carderock Division personnel, private communications with John Harrop, SC&A, Inc., February 14 and February 25, 2003.

- Ammunition storage: 85% air, 15% objects. The objects comprise 50% steel and 50% explosives, by weight. The explosives are high energy PBX.

- Fuel oil storage: 100% fuel oil (average specific gravity = .72).

C.2.14.3 Specific Compartment Descriptions

This section provides more specific descriptions of the dimensions and contents of the various compartments than is presented in the preceding sections.

C.2.14.3.1 Forward Compartment

A forward compartment at the ship's bow contains the anchor, anchor motor, shot locker, and various voids. The compartment is 25 ft (7.6 m) long and is tapered. The compartment is accessible, but normally is not manned at sea or in port.

C.2.14.3.2 Fuel Oil Storage Compartment

Fuel storage can accommodate various types of fuel oil as cargo. One compartment is structured as fuel tanks to accommodate this fuel oil, as well as fuel oil for the ship. Located one deck below the main deck is a crew's berthing area. The berthing area comprises the same mix of materials as present in other crew's berthing areas, described below.

The fuel oil storage compartment is 40 ft deep, 100 ft wide, and 200 ft long (12 × 30.5 × 61 m). The compartment contains one deck below the crew's berthing area that is devoted to various pumps and piping systems needed to transfer the fuel oil to the ship's propulsion system, or to the underway replenishment system (for cargo fuel oil). Located on a deck above the fuel oil tanks is a fuel oil transfer station, which contains pumps, motors, valves, and piping to transfer oil from the fuel oil tanks to other ships during underway replenishment. The fuel oil transfer station is manned during underway replenishment operations and fuel loading operations. Otherwise, the compartment is unmanned.

C.2.14.3.3 Large Cargo

One large cargo compartment, structured as an open hold, is dedicated to storage of large components, such as vehicles, turbines, and the like. The compartment is accessible, but is not normally manned.

C.2.14.3.4 Ammunition

An ammunition compartment is located forward of the forward-most dry-refrigerated storage compartment, and is structured as an open hold. Ammunition ranges from missiles (air-to-air; surface-to-air), to 5-inch (127-mm) and smaller projectiles, to small arms ammunition. The gun munitions are generally densely packed, while missile storage is much less dense. The ammunition compartment is manned during some underway replenishment operations and during

ship loading operations (in port–at sea). This compartment is filled to within 10 – 15 feet (~3 – 5 m) of the top.

The "open holds" are filled from the bottom up, but are usually fairly full—the materials in these holds will be boxed, palletized, or otherwise packaged, with the result that most of the space will be filled. Furthermore, the different "packages" will be separated by some amount of space to allow personnel to work around the shipping containers (the containers are lashed to the bulkheads or other structural members so they don't flop around when the ship pitches, rolls, and yaws). To allow access and facilitate unloading, both the ammunition and large cargo compartments are typically filled to within 10 – 15 feet of the top.

C.2.14.3.5 Dry-Refrigerated Storage

One dry-refrigerated storage compartment is located forward and aft of the engineering spaces. The dry-refrigerated storage compartment contains 500 tons (~450 t) of cargo dry stores, 250 tons (~225 t) of cargo refrigerated stores, and approximately 1,350 tons (1,225 t) of other stores for use by the ship's crew. This compartment includes three decks. The compartment is manned during underway replenishment, and during ship loading operations (in port), and is toured periodically (e.g., hourly for 15 minutes) in port and at sea.

C.2.14.3.6 Engine Rooms

Two compartments, starting aft of an auxiliary compartment, are structured as engine rooms (ER1 and ER2 in Figure C.12). Each engine room includes two LM2500 propulsion modules, electrical generating components, and various other auxiliary components. The engine rooms include a deck at the second deck level. The LM2500 modules are mounted on a third deck approximately 30 feet (9.1 m) below the second deck level. The volume below the third deck is not normally accessible to the crew, and houses various tanks and voids. The engine rooms are manned at sea and in port. At sea, most of the engine room watchstanders are in an enclosed operating space located at the aft bulkhead of the engine room. Some watchstanders will periodically tour through the engine room to check operation of the gas turbines and other engine room systems.

C.2.14.3.7 Auxiliary Rooms

Two compartments are structured as auxiliary rooms. One (AMR1—see Figure C.12) is located forward of the forward engine room (ER1) and one (AMR2) is located aft of the aft engine room (ER2). These compartments contain various engineering system components such as lubricating oil pumps and sumps, hydraulic oil pumps, accumulators and tanks, evaporators, seawater cooling systems, fire fighting pumps, air compressors, and other engineering components and systems. Each of these two compartments contains three decks, separated by about 10 feet (~3 m). Below the third deck is a system of tanks and other inner-bottom spaces not normally accessible to the crew. The auxiliary rooms are manned at sea.

C.2.14.3.8 Aft Compartment

One aft compartment, 75 feet (23 m) long, tapers toward the stern. The aft compartment has a specific density of 10%, comprising steel objects (e.g., shafts, rudder stock, steering gear). The aft compartment is toured periodically, and for a limited time, by a single watchstander.

C.2.14.3.9 Superstructure Compartments

The ship comprises a forward and an aft superstructure. The aft superstructure accommodates the gas turbine exhaust and the ship's helicopters. The forward superstructure accommodates most of the ship's command and control operations, and crew berthing and messing facilities.

Exterior bulkheads of the superstructure are formed from thin steel plate (⅜ inch [9.5 mm]). Interior bulkheads that serve to separate living spaces and working spaces are formed from thin aluminum sheet (typically $\frac{1}{16}$ inch [1.6 mm]), reinforced with steel supports. The bulkheads are insulated.

Aft Superstructure

The aft superstructure includes a hangar to house three Sea Knight helicopters, and shops to repair the helicopters. The hanger and shops are aft of the gas turbine exhausts. This area of the ship is approximately 75 ft long, 40 ft high, and 87 ft wide (23 × 12 × 26.5 m), and is normally manned while the ship is underway.

Forward Superstructure

The forward superstructure includes two decks of berthing (O-1 and O-2) for the officers, chief petty officers, and more senior petty officers (other crew berthing is provided below the main deck, above the fuel oil storage area). The O-4 level is 87 ft wide by 90 ft long (26.5 m × 27.4 m). O-3 is the same size. The O-5 level is slightly narrower (67 ft [20.4 m]), but has two "wings" at its forward end. The O-1 and O-2 levels are 87 ft wide and 125 ft long (26.5 × 38.1 m).

The O-1 and O-2 decks also accommodate messing facilities for the petty officers and other enlisted personnel, and a wardroom for the officers. The O-3 – O-5 decks of the forward superstructure house the ship's command and control stations (e.g., navigation, steering, radar, sonar, combat control [only for commissioned ships]), and are continuously manned at sea. The spaces are manned with a reduced crew while the ship is in port or at anchor.

C.2.14.4 Exposure Geometry

The cross-sectional view in Figure C.12 shows the modified outline of the hull. The vertical profile is modeled as a rectangle. The coordinate system used in the model has its origin at the bottom surface of the deck forming the bottom of the main berthing area. The x-axis is parallel

to the midline of the ship, as shown in the plan view. The z-axis is in the plane forming the aft surface of the transverse bulkhead marked T4 in the cross-sectional view.

The transverse bulkheads (running port to starboard) are marked T1 – T10. T4 marks the location of two bulkheads: T41 is below decks, while T42 is part of the forward superstructure. The decks in the forward superstructure are numbered according to the compartment above that deck: e.g., deck O2 is between the compartments marked O1 and O2. Deck O6 forms the top of the superstructure. Lateral bulkheads, marked L1 – L4 in the plan view in Figure C.12, run fore and aft. L1 marks the position of two bulkheads: L11, which forms the port side of compartments O1 and O2, and L12, which forms the port side of compartments O3 – O5. Similarly, L2 shows the location of bulkheads L21 and L22, which form the starboard sides of the same compartments. The detailed geometry specifications are listed in Tables C.43 and C.44.

The radiation sources are uniformly distributed throughout the steel structures of the ship, which comprise the hull, the decks, and the bulkheads. Dose rates are calculated at four locations: (1) the berthing compartment; (2) the O1 compartment, which includes the mess and lounge areas; (3) the O4 compartment, which is part of the operations area; and (4) the area of the main deck occupied by the UNREP watchstander, marked “WS 2" in Figure C.12. In the first two locations, the crew members would occupy various locations throughout a given volume within the compartment. For instance, in the berthing compartment, the bunks are triple-decked, so an individual can be at various heights above the deck, depending on which bunk he occupies, whether he is lying, sitting, or standing, etc. Similarly, in the mess and lounge area, the individual could be sitting, standing, or reclining. For these areas, the analysis employs a “volume detector”—i.e., the dose rates are integrated over the occupied volume of each compartment, as specified in Table C.44.[16] In the other two locations, the individual is assumed to be standing, so the doses are calculated at a height of 1 m above the deck, but integrated over the entire occupied area. Therefore, the tally is specified as an “area detector.”[17]

The bow of the ship is formed by two intersecting cylindrical shells, with axes in the z-direction. The x-coordinate of the axes is indicated by “X” in the table, and is the same for both axes. The two y-coordinates are shown as “Y-left” and “Y-right” in the first row of data in Table C.45. The cylinders are delimited by an intersecting x-z plane passing through the origin, a y-z plane passing through the x-coordinate of the axis, and two x-y planes. The lower one forms the lowermost surface of the hull, while the upper one forms the uppermost surface of the main deck. Another pair of cylindrical shells, with the same centers but smaller radii, forms the inner surface of the hull. The difference between the outer and inner radii—1.91 cm—is the thickness of the hull. A third pair of cylinders, again concentric with the first two sets, delimits the tally region in the berthing compartment. The difference between these radii and those of the inner surface

[16] The use of a volume detector greatly increases the computational efficiency of MCNP, which is highly desirable in this case, given the complexity of the model.

[17] The actual MCNP analysis utilized a very thin volume detector for these two tallies.

of the hull is the separation of the nearest occupied location from the edge of the hull, 56.83 cm. The cylinders are intersected by x-y planes specified by z-min and z-max of the tally cell.

Table C.43 Steel ship exposure geometry—structures (cm)

Location		Thickness	X		Y		Z	
			Min	Max	Min	Max	Min	Max
Hull—bottom		1.91	-16002	a	-1630	1630	-1829	-1827
Decks — forward compartments	Level 1	0.95	0.95	6096	-1630	1630	0	0.95
	Main	1.27	-16002	a	-1630	1630	305	306
	O2	0.95	0.95	3810	-1325	1325	610	611
	O3	0.95	0.95	3810	-1325	1325	914	915
	O4	0.95	0.95	2743	-1325	1325	1219	1220
	O5	0.95	0.95	2743	-1325	1325	1524	1525
	O6	0.95	0.95	2743	-1325	1325	1829	1830
Decks — Aft	Level 1	0.95	-7620	-4572	-1630	1630	0	0.95
	O5A	0.95	-12953	-6858	-1325	1325	1524	1525
Transverse bulkheads	T41	0.95	0	0.95	-1630	1630	-1827	305
	T42	0.95	0	0.95	-1325	1325	306	1830
	T1	0.95	6096	6097	-1129	1129	-1827	305
	T2	0.95	3810	3811	-1325	1325	306	915
	T3	0.95	2743	2744	-1325	1325	915	1830
	T5	0.95	-1524	-1523	-1630	1630	-1827	305
	T6	0.95	-3048	-3047	-1630	1630	-1827	305
	T7	0.95	-4572	-4571	-1630	1630	-1827	305
	T8	0.95	-6096	-6095	-1630	1630	-1827	305
	T9	0.95	-6858	-6857	-1325	1325	306	1525
	T10	0.95	-12954	-12953	-1325	1325	306	1525
	Hull-aft	1.91	-16002	-16000	-1630	1630	-1827	305
Hull & lateral bulkheads	Hull-left	1.91	-16002	a	1630	1632	-1829	306
	Hull-rgt	1.91	-16002	a	-1632	-1630	-1829	306
	L11	0.95	0	3811	1325	1326	306	915
	L21	0.95	0	3811	-1326	-1325	306	915
	L12	0.95	0	2744	1325	1326	915	1830
	L22	0.95	0	2744	-1326	-1325	915	1830
	L3	0.95	-12954	-6857	1325	1326	306	1525
	L4	0.95	-12954	-6857	-1326	-1325	306	1525

[a] For rectangular portion of cell (except forward compartment), x-max = 4136 cm, which also begins curved portion. Actual x-max of curved portion determined by intersection of cylindrical arcs.

These cylindrical shells form the bow portion of the main deck, the hull (both sides and bottom), parts of the berthing and fuel transfer compartments, the forward compartment, and the tally region inside the berthing compartment. The actual limits of these cells are determined by the

cylindrical shells and their intersection with the median plane of the ship. The bulkhead T1 is also delimited by the cylinders; however, the y-dimensions shown in Table C.43 were obtained by solving for the position of the arc at that point.

Table C.44 Steel ship exposure geometry—compartments (cm)

Location	Compartment	Content	X		Y		Z	
			Min	Max	Min	Max	Min	Max
Tallies	Berthing	Volume detector	57	6040	-1573	1573	46	229
	O1		46	3764	-1279	1279	359	406
	O4	Area detector	46	1265	578	1279	1320	—
	WS-2		-6706	-5182	900	1601	406	—
Waterline								-671
Forward	Fuel	Fuel	0.95	6096	-1630	1630	-1827	-305
	Level 2	Fuel transfer	0.95	6096	-1630	1630	-305	0
	Level 1	Berthing & forward super-structure	0.95	6096	-1630	1630	0.95	305
	O1		0.95	3810	-1325	1325	306	610
	O2		0.95	3810	-1325	1325	611	914
	O3		0.95	2743	-1325	1325	915	1219
	O4		0.95	2743	-1325	1325	1220	1524
	O5		0.95	2743	-1325	1325	1525	1829
	Forward	Misc.	6097	a	a	a	-1827	305
Midship & aft	Cargo-1	Air	-1523	0	-1630	1630	0	305
	Ammo-11		-3047	-1524	-1630	1630	0	305
	Ammo-21		-4571	-3048	-1630	1630	0	305
	Cargo-2	Cargo	-1523	0	-1630	1630	-1827	0
	Ammo-12	Ammo	-3047	-1524	-1630	1630	-1827	0
	Ammo-22		-4571	-3048	-1630	1630	-1827	0
	Dry-1	Dry stores	-6095	-4572	-1630	1630	0.95	305
	Dry-2		-6095	-4572	-1630	1630	-1827	0
	AMR-11	Misc.	-7620	-6096	-1630	1630	0.95	305
	AMR-12		-7620	-6096	-1630	1630	-1827	0
	Aft-below		-16000	-7620	-1630	1630	-1827	305
	Aft SS		-12953	-6858	-1325	1325	306	1524

[a] For rectangular portion of cell (except forward compartment), x-max = 4136 cm, which also begins curved portion. Actual x-max of curved portion determined by intersection of cylindrical arcs.

Table C.45 Taper of bow: coordinates of cylindrical shells (cm)

Center			Radius (cm)		
X	Y—left	Y—right	Outer hull	Inner hull	Tally
4136.14	-2906.21	2906.21	4536.89	4534.98	4478.15

C.2.14.5 Composition of Materials

The ship is constructed of DH-36 steel, an alloy commonly used in shipbuilding. The elemental composition of this alloy is listed in Table C.46. The table also lists the composition and average density of each major compartment that is included in the ship model, based on the description in Section C.2.14.2.

Table C.46 Composition of materials and compartments of ship (wt. fraction)

Element	DH-36 steel	Sea-water	Berthing-fwd SS[a]	Fuel	Cargo	Ammo	Fuel transfer	Dry stores	Misc.	Aft SS[a]
H		0.1082	0.0185	0.144	3.11e-03	0.0111	1.03e-06	0.0557	6.50e-07	6.20e-03
C	0.002		0.1321	0.856	0.0222	0.1847		0.3982		0.0444
N			0.0070		1.50e-04	0.0938	1.23e-03	0.0034	7.72e-04	1.66e-03
O		0.8586	0.1488		0.0247	0.2114	3.84e-04	0.4431	2.42e-04	0.0498
Na		0.0108								
Mg		1.27e-03								
Al			0.4954				0.0998	0.0498	0.0999	0.0998
Si	0.004									
S		9.07e-04								
Cl		0.0194								
Ar			1.19e-04		2.57e-06	2.56e-05	2.09e-05	5.79e-05	1.32e-05	2.84e-05
K		4.00e-04								
Ca		4.13e-04								
Mn	0.0145									
Fe	0.980		0.1981		0.9498	0.499	0.8985	0.0498	0.8991	0.7982
D (g/cm^3)	7.86	0.998	0.123	0.720	3.11	0.493	0.661	0.226	0.991	0.488

[a] Superstructure

C.2.14.6 Results of Analysis

The results of the analysis are presented in Table C.47. The dose rates from the 12 monoenergetic photon sources are computed by MCNP at the four tally locations described in Section C.2.14.4. Doses inside the compartments from the lower-energy photon sources are extremely low due to shielding by the material filling the compartments. Since the fill material is distributed throughout the volume of the compartment, and since the tally volume is typically 0.5 – 1 m from the nearest steel structure, the intervening material essentially absorbs the low-energy photons. These dose rates are too low to be statistically meaningful and are therefore not listed. Since the doses are integrated over the entire occupied space in each of the three compartments and over the occupied area of the main deck, there is no basis for determining uncertainty based on variation of location. U_x for the steel ship scenarios is therefore assigned the fixed value, $U_x = 1$.

Table C.47 Dose rates in steel ship

Energy (MeV)	Effective dose equivalent (Sv/s per Bq/g)				Effective dose (Sv/s per Bq/g)			
	Berthing	O1	O4	Main deck	Berthing	O1	O4	Main deck
0.010	—	—	—	2.19e-17	—	—	—	2.00e-17
0.015	—	—	—	3.35e-16	—	—	—	2.26e-16
0.020	—	—	—	1.50e-15	—	—	—	1.00e-15
0.030	—	—	—	8.74e-15	—	—	—	6.51e-15
0.050	5.17e-17	1.09e-16	—	6.66e-14	4.71e-17	9.97e-17	—	6.04e-14
0.070	3.17e-15	6.01e-15	2.43e-15	1.99e-13	3.02e-15	5.73e-15	2.32e-15	1.89e-13
0.100	5.04e-14	7.93e-14	5.03e-14	6.42e-13	4.90e-14	7.70e-14	4.88e-14	6.25e-13
0.200	8.51e-13	1.14e-12	8.47e-13	3.36e-12	8.22e-13	1.11e-12	8.19e-13	3.25e-12
0.500	4.98e-12	6.20e-12	4.86e-12	1.24e-11	4.84e-12	6.02e-12	4.72e-12	1.21e-11
1.0	1.31e-11	1.59e-11	1.28e-11	2.64e-11	1.28e-11	1.55e-11	1.26e-11	2.59e-11
2.0	3.12e-11	3.75e-11	3.13e-11	5.26e-11	3.06e-11	3.67e-11	3.07e-11	5.18e-11
5.0	8.31e-11	9.95e-11	8.60e-11	1.15e-10	8.13e-11	9.73e-11	8.41e-11	1.13e-10

MCNP analyses of bremsstrahlung from the **$** decay of individual nuclides are not performed for this model. The bremsstrahlung contribution is calculated as part of the derivation of external exposure coefficients of all the nuclides, as discussed in Section C.1.2.2.

C.3 Copper

Most of the geometries in the copper scrap exposure scenarios closely resemble the geometries in the corresponding iron and steel scenarios. New MCNP analyses for copper are required only if differences in the exposure geometry or the source material would produce significantly different results.

There are two reasons why radioactive sources distributed in copper could produce different dose rates than the same sources distributed in the same configuration of iron or steel. One is differences in photon cross-sections of copper and iron; the other is the increased intensity of bremsstrahlung from **$**-emitting nuclides in copper.

In a one-dimensional approximation, the intensity of electromagnetic radiation from a photon source uniformly distributed in a material can be calculated by the following expression:

$$I_\gamma = a\left(\frac{1 - e^{-\mu\rho\Delta x}}{\mu}\right)$$

$I_($ = total intensity of emitted photons

a = specific activity of photon source in material (photons/s per g)

: = mass absorption coefficient (cm^2/g)

D = density of material (g/cm^3)

) x = thickness of material (cm)

Table C.48 lists the total absorption cross-section (**F**$_{tot\ H}$), in barns/atom, for iron and copper and for a range of photon energies from 10 keV to 5 MeV (Storm and Israel 1970). The mass-absorption coefficient (**:**), in cm^2/g, is calculated by multiplying **F**$_{tot\ H}$ by the conversion factor **:**/**F** specific to each element. I$_{(}$ is calculated for two different thicknesses: 0.8 cm, the thickness of the cylindrical shell used to represent a large metal object, and 12.19 m (40 ft), the length of trailer transporting various metal products. These two values span the range of exposure geometries in the copper analysis. As seen in Table C.48, the intensity of emitted radiation from copper ranges from 13% greater to 30% less than the corresponding radiation from iron. It is therefore reasonable to use these dose rates for cases where the exposure geometry is the same for copper as for iron and steel.

Table C.48 Scoping calculation of intensity of photons emitted from Cu vs. Fe

E$_{(}$[a] (MeV)	Fe				Cu				Ratio (Cu ÷ Fe)	
	D = 7.86 g/cm^3		**:**/**F** = 0.01078		**D** = 8.96 g/cm^3		**:**/**F** = 0.009478			
	F$_{tot\ H}$	**:** (cm^2/g)	I$_{(}$ (cm^{-2} s^{-1}) 0.8 cm	I$_{(}$ (cm^{-2} s^{-1}) 1219 cm	**F**$_{tot\ H}$	**:** (cm^2/g)	I$_{(}$ (cm^{-2} s^{-1}) 0.8 cm	I$_{(}$ (cm^{-2} s^{-1}) 1219 cm	0.8 cm	1219 cm
0.01	15700	169.25	0.0059	0.006	22600	214.20	0.00467	0.00467	0.79	0.79
0.02	2310	24.90	0.0402	0.0402	3480	32.98	0.0303	0.0303	0.76	0.76
0.05	156	1.68	0.595	0.595	245	2.32	0.431	0.431	0.72	0.72
0.06	91.1	0.982	1.016	1.018	145	1.37	0.728	0.728	0.72	0.71
0.08	39	0.420	2.21	2.38	61	0.578	1.70	1.73	0.77	0.73
0.10	20.5	0.221	3.40	4.53	32	0.303	2.92	3.30	0.86	0.73
0.20	4.51	0.0486	5.42	20.57	6.19	0.0587	5.85	17.04	1.08	0.83
0.50	2.72	0.0293	5.74	34.1	3.13	0.0297	6.46	33.7	1.12	0.99
1.0	2.55	0.0275	5.77	36.4	2.74	0.0260	6.54	38.5	1.13	1.06
2.0	2.16	0.0233	5.85	43.0	2.42	0.0229	6.61	43.6	1.13	1.02
5.0	2.12	0.0229	5.86	43.8	3.45	0.0327	6.39	30.6	1.09	0.70

Source: Storm and Israel 1970

[a] These energies span the same range as the energy grid used for the MCNP calculations. The lower-energy values were selected to test the dependency of **F**$_{tot\ H}$ on E$_{(}$. Some of the energies are different than the ones in the MCNP analysis.

Table C.49 lists the external exposure geometries for which the dose coefficients used in the copper analysis utilize the dose rates from the 12 photon energies calculated by MCNP for corresponding geometries in the steel analysis. The bremsstrahlung contributions to the dose coefficients for individual nuclides are calculated from the scaled bremsstrahlung spectra discussed in Section C.1.2.2, using the elemental composition of the materials in the copper analysis. The composition of materials unique to the copper analysis is listed in Table C.50.

The MCNP analyses of copper exposure geometries that do not correspond closely to exposure geometries in the steel analysis are discussed in the following sections. However, there are no separate calculations of bremsstrahlung from the **$**-ray spectra of individual radionuclides. The

calculations using the scaled bremsstrahlung spectra are found to agree with the MCNP bremsstrahlung calculations in the steel analysis. The computationally intensive MCNP calculations can only be performed for selected nuclides, while the calculations using the scaled bremsstrahlung spectra are readily applied to all nuclides and all emitted electrons, not just **$** rays. MCNP bremsstrahlung calculations for individual nuclides are therefore not performed for the copper, aluminum, and concrete analyses.

Table C.49 Corresponding exposure geometries in copper and steel analyses

Copper[a]		Steel[b]	
No.	Exposure geometry	No.	Exposure geometry
22	Baghouse	4	Baghouse
23	Large metal mass	5	Large metal object
24	Small metal mass	6	Small metal object
25	Small object on body	7	Small object next to body
26	Scrap truck	8	Scrap truck
27	Dust truck	11	Dust in dump trailer
28	Slag truck	9	Slag truck

[a] As listed in Table 4.7 in main report

[b] As listed in Table 3.10 in main report

Table C.50 Composition of materials unique to copper analysis (wt. fraction)

Element	Copper	Baghouse[a]	Cu slag	Cu dust
H		1.96e-04		
B		0.0103		
N		0.233		
O		0.299	0.285	0.201
Na		7.60e-03		
Al		2.71e-03		
Si		0.097	0.075	
Ar		3.98e-03		
Fe			0.200	
Cu	1.00	0.347	0.400	0.799
Zn			0.010	
Pb			0.030	
D[b]	8.96	3.61e-03	2.0	n/a

[a] Baghouse interior: Cu dust + fiberglass + moist air

[b] Density (g/cm^3), unless otherwise specified for individual exposure scenarios; bulk densities for aggregate materials such as slag

C.3.1 Copper Scrap Pile

The analysis of the copper scrap pile is modeled after that of the steel scrap pile described in Section C.2.1.1. Only the features that are unique to copper are described here.

The bulk density of the scrap is estimated on the basis of the bulk density of ferrous scrap. As discussed in Section C.2.1.1, the bulk density of ferrous scrap can range from 16 to 22 lb/ft^3 prior to compaction. Since copper is about 14% denser than steel, it is assumed that the bulk density of copper-base scrap would be at the upper end of the range cited for ferrous scrap, or 22 lb/ft^3 (0.35 g/cm^3).

The mass of the pile is based on the average size of a scrap pile at a copper scrap dealer. As shown in Table 4.1 of the main report, 334 kt of copper-base old scrap was recovered in the United States in 2000. According to Section D.3.1, there are estimated to be 770 copper scrap dealers in the United States. Each dealer would have at most two-weeks' inventory on hand, which is calculated to be 16.68 t (334,000 t ÷ 770 dealers ÷ 52 wks × 2 wks = 16.68 t). Assuming this inventory is in one pile, the radius, as calculated by Equation C.1, is 2.83 m.

The results of the copper scrap pile analysis are presented in Table C.51. The dose rates from the 12 monoenergetic photon sources are computed by MCNP at distances of 100 cm and 500 cm from the edge of the pile. A slightly modified method was used to calculate the average effective coefficient of variation:

$$\overline{C_v} = \frac{\overline{\sigma_D}}{\overline{R_{200}}}$$

$\overline{\sigma_D}$ = average standard deviation of dose rates at 100 and 500 cm

$\overline{R_{200}}$ = average dose rate at 200 cm

Table C.51 Dose rates from pile of copper scrap

Energy (MeV)	Effective dose equivalent (Sv/s per Bq/g)						Effective dose (Sv/s per Bq/g)					
	100 cm	500 cm	x_o (cm)	A_o	200 cm	F_D	100 cm	500 cm	x_o (cm)	A_o	200 cm	F_D
0.010	1.39e-17	1.56e-19	52.6	3.12e-14	1.44e-18	6.87e-18	1.66e-17	1.88e-19	52.4	3.77e-14	1.73e-18	8.21e-18
0.015	8.95e-17	8.19e-18	-73.5	2.69e-12	3.60e-17	4.07e-17	1.32e-16	1.22e-17	-74.7	4.03e-12	5.34e-17	5.99e-17
0.020	3.58e-16	5.19e-17	-145.9	2.17e-11	1.81e-16	1.53e-16	5.06e-16	7.36e-17	-146.6	3.08e-11	2.56e-16	2.16e-16
0.030	2.18e-15	4.00e-16	-199.7	1.96e-10	1.23e-15	8.90e-16	2.63e-15	4.85e-16	-201.1	2.38e-10	1.48e-15	1.07e-15
0.050	1.57e-14	3.22e-15	-231.1	1.72e-09	9.26e-15	6.24e-15	1.64e-14	3.37e-15	-231.7	1.80e-09	9.68e-15	6.52e-15
0.070	5.40e-14	1.14e-14	-240.0	6.24e-09	3.22e-14	2.13e-14	5.28e-14	1.12e-14	-241.5	6.16e-09	3.16e-14	2.08e-14
0.100	1.81e-13	3.88e-14	-244.9	2.15e-08	1.09e-13	7.11e-14	1.81e-13	3.88e-14	-244.9	2.15e-08	1.09e-13	7.11e-14
0.200	1.31e-12	2.81e-13	-245.1	1.56e-07	7.87e-13	5.15e-13	1.31e-12	2.81e-13	-245.1	1.56e-07	7.87e-13	5.15e-13
0.500	6.51e-12	1.40e-12	-245.9	7.79e-07	3.92e-12	2.56e-12	6.58e-12	1.42e-12	-247.0	7.92e-07	3.97e-12	2.58e-12
1.0	1.57e-11	3.41e-12	-249.1	1.91e-06	9.49e-12	6.15e-12	1.59e-11	3.44e-12	-247.9	1.92e-06	9.59e-12	6.23e-12
2.0	3.40e-11	7.44e-12	-251.6	4.20e-06	2.06e-11	1.33e-11	3.40e-11	7.44e-12	-251.6	4.20e-06	2.06e-11	1.33e-11
5.0	7.61e-11	1.67e-11	-252.5	9.46e-06	4.62e-11	2.97e-11	7.62e-11	1.68e-11	-254.1	9.55e-06	4.63e-11	2.97e-11
Average[a]					7.38e-12	0.65[b]					7.40e-12	0.64[b]

[a] Omits 0.010 MeV values—see text

[b] Average effective coefficient of variation

The standard deviation of the 10 keV dose rates is much greater than the calculated dose rate at 200 cm. Since, as was discussed in Section C.2.2, photons in this low-energy range make only minor contributions to the dose coefficients of most of the radionuclides in the present analysis,

the 10 keV doses are not used in calculating $\overline{C_v}$. Based on these results, U_x for the scrap yard is assigned a uniform distribution: 0.36 # U_x # 1.64.

C.3.2 Copper Slag Pile

As discussed in Section 4.6.3 of the main report, copper slag is spread out in a thin layer on the floor in the refinery for recovery of metallic copper (the term "slag pile" is used for consistency with the steel analysis). The slag is produced during the melting of one heat in the 200-ton (180-t) furnace at Reading Tube, which is the reference fire refinery in the present analysis. Since, as noted in Section 4.2.3.1, about 25% of the melt is left in the furnace as a heel for the subsequent heat, the actual output of one furnace heat is about 150 tons (135 t). The mass fraction of slag is estimated to be 2 – 2.5% of the charge weight (see Section 4.3.1.1). Consequently, the average mass of slag produced from one heat is about 3.375 tons (3,062 kg) (150 tons × 2.25% = 3.375 tons).

The slag would be spread out in a 5-cm thick layer to allow visual identification of any copper nuggets embedded in the slag (Anigstein et al. 2001, Section 9.3.3). In the present analysis, copper slag is assigned a density of 2 g/cm^3, the same as steel slag. The "pile" of slag thus occupies an area of 30.62 m^2 (3,062 kg ÷ [0.05 m × 2,000 kg/m^3] = 30.62 m^2). The radius of this disk is given by $r = \sqrt{\frac{A}{\pi}}$ = 3.12 m. The slag "pile" is located near a corner of a steel building that is 200 ft long × 40 ft wide × 40 ft high (61× 12.2 × 12.2 m) and stands on a thick concrete slab. Since the slag processing worker would be moving over the entire area of the slag, the doses are integrated over this area, at a height of 1 m. Since the radiation is incident from many different directions, the isotropic (ISO) irradiation geometry is used in the MCNP analysis. The detailed exposure geometry is presented in Table C.52.

Table C.52 Worker handling copper slag: exposure geometry (cm)

Location	Thickness	X		Y		Z	
		Min or radius	Max or center	Min	Max or center	Min	Max
Source—Cu slag		312	412		412	0	5
walls—steel	0.159	0	6096	0	1219	0	1219
roof—steel	0.159	0	6096	0	1219	1219	1219
Floor—concrete	$ 3 MFPs						0
Tally (area detector)		312	412		412	100	

The results of the analysis are presented in Table C.53. The dose rates from the 12 monoenergetic photon sources are computed by MCNP over the area of the slag. Since the doses are integrated over the entire area, there is no basis for determining uncertainty based on variation of location. U_x for the slag handling scenario is therefore assigned the fixed value, U_x = 1.

Table C.53 Dose rates to worker handling copper slag

Energy (MeV)	EDE (Sv/s per Bq/g)	Effective dose (Sv/s per Bq/g)
0.010	2.35e-17	2.15e-17
0.015	2.76e-16	1.87e-16
0.020	1.08e-15	7.22e-16
3.00e-02	5.58e-15	4.16e-15
0.050	3.24e-14	2.96e-14
0.070	9.95e-14	9.52e-14
0.100	2.49e-13	2.43e-13
0.200	1.40e-12	1.35e-12
0.500	5.76e-12	5.62e-12
1.0	1.25e-11	1.22e-11
2.0	2.39e-11	2.35e-11
5.0	4.99e-11	4.88e-11

C.3.3 Truck Loaded with Metal Product

The exposed individual in the scenario describing the transportation of copper products is a truck driver hauling copper tubes. The standard length of straight copper tubes is 20 ft (6.1 m). The tubes in this scenario have a 2.5-in (6.35 cm) O.D., a wall thickness of 0.2356 cm, and weigh 54.5 lb (24.72 kg) each. A 20-t load comprises 809 tubes.

The tubes are transported in an enclosed trailer that is 20 ft long, 8.5 ft wide, and 109 inches high (610 × 259 × 277 cm) on the inside—the dimensions of the trailer are based on a Montone aluminum trailer. The tubes are in alternating layers of 39 – 38 tubes wide: bottom layer 39, next 38, etc.—a total of 21 layers. The arrangement of the tubes is illustrated in Figure C.13.

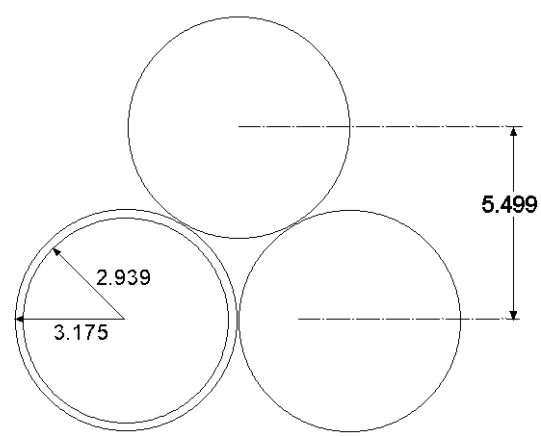

Figure C.13 Typical arrangement of copper tubes—dimensions in cm

The load is modeled as a rectangular solid. The height of the load, based on the dimensions shown in Figure C.13, is 244 cm (5.499 × 20 + 3.175 × 2 . 244). The total volume of the load is 1.756×10^7 cm^3; the effective density, $\mathbf{D}_{eff} = \frac{\mathbf{M}}{\mathbf{V}} = 1.139$ g/cm^3.

The truck hauling the trailer—the same as the one hauling EAF dust in a dump trailer, described in Section C.2.8.4—is equipped with a sleeper. Doses to the driver in both driver's seat and in the sleeper are calculated by MCNP. The assessments of the two locations utilize the posteroanterior (PA) and rotational (ROT) exposure geometries, respectively. Details of the exposure geometry are presented in Table C.54.

Table C.54 Driver of tractor-trailer hauling copper tubes: exposure geometry (cm)

Location		Thickness	X		Y		Z	
			Min	Max	Min	Max	Min	Max
Load			-812.8	-203.2	-123.8	123.8	127.6	244.0
Truck cab—aluminum		0.3175	0.0	287.0	-106.7	106.7	127.0	391.2
Trailer—aluminum*	floor	0.635	-812.8	-203.2	-129.5	129.5	127.0	127.6
	nose & tail[a]	0.476	-812.8	-203.2	-129.5	129.5	127.6	404.5
	sides[b]	0.4064	-812.8	-203.2	-129.5	129.5	127.6	404.5
	top	0.3175	-812.8	-203.2	-129.5	129.5	404.5	404.8
Pavement—concrete								0.0
Tally points		1	205.7		79.38		180.3	
		2	172.7					
		3	95.3		0.0		203.2	
		4	114.3					

[a] x-min and x-max refer to tail and nose, respectively

[b] y-min and y-max refer to right and left sides, respectively

The results of the analysis are presented in Tables C.55 and C.56. The dose rates from 11 of the 12 monoenergetic photon sources are computed by MCNP at the two locations specified in Table C.54. Because of the strong absorption of low-energy photons by the walls of the truck cab, the dose rates from the 10 keV source are too low to be statistically meaningful and are therefore not listed. The average of the dose rates at the two tally points is adopted as the dose rate from each of the 11 photon sources in this exposure geometry. $\overline{C_v}$ is calculated on the basis of all 11 sources. Based on these results, U_x is assigned a uniform distribution. In the driver's seat: 0.9 # U_x # 1.1, while in the sleeper: 0.93 # U_x # 1.07.

Table C.55 Hauling copper tubes: dose rates in driver's seat

Energy (MeV)	Effective dose equivalent (Sv/s per Bq/g)				Effective dose (Sv/s per Bq/g)			
	TP 1	TP 2	Mean	C_v[a]	TP 1	TP 2	Mean	C_v[a]
0.015	1.57e-25	1.85e-25	1.71e-25	0.116	9.33e-26	1.09e-25	1.01e-25	0.110
0.020	2.24e-20	2.59e-20	2.42e-20	0.102	7.88e-21	9.11e-21	8.50e-21	1.02e-01
0.030	2.28e-17	2.65e-17	2.47e-17	0.106	1.29e-17	1.50e-17	1.40e-17	1.06e-01
0.050	9.92e-16	1.14e-15	1.07e-15	0.098	7.71e-16	8.89e-16	8.30e-16	1.01e-01
0.070	4.76e-15	5.44e-15	5.10e-15	0.094	4.10e-15	4.70e-15	4.40e-15	9.64e-02
0.1	1.93e-14	2.20e-14	2.07e-14	0.093	1.74e-14	1.99e-14	1.87e-14	9.48e-02
0.2	1.48e-13	1.69e-13	1.59e-13	0.094	1.36e-13	1.55e-13	1.46e-13	9.23e-02
0.500	7.04e-13	8.04e-13	7.54e-13	0.094	6.57e-13	7.50e-13	7.04e-13	9.35e-02
1.0	1.61e-12	1.85e-12	1.73e-12	0.098	1.51e-12	1.73e-12	1.62e-12	9.60e-02
2.0	3.33e-12	3.82e-12	3.58e-12	0.097	3.13e-12	3.59e-12	3.36e-12	9.68e-02
5.0	7.25e-12	8.33e-12	7.79e-12	0.098	6.73e-12	7.73e-12	7.23e-12	0.098
Average				0.099				0.099

[a] Coefficient of variation

Table C.56 Hauling copper tubes: dose rates in sleeper berth

Energy (MeV)	Effective dose equivalent (Sv/s per Bq/g)				Effective dose (Sv/s per Bq/g)			
	TP 3	TP 4	Mean	C_v[a]	TP 3	TP 4	Mean	C_v[a]
0.015	7.75e-25	7.01e-25	7.38e-25	0.071	5.21e-25	4.71e-25	4.96e-25	0.071
0.020	5.71e-20	5.15e-20	5.43e-20	0.073	4.03e-20	3.63e-20	3.83e-20	0.074
0.030	4.59e-17	4.11e-17	4.35e-17	0.078	3.79e-17	3.40e-17	3.60e-17	0.077
0.050	1.55e-15	1.40e-15	1.48e-15	0.072	1.48e-15	1.33e-15	1.41e-15	0.076
0.070	7.01e-15	6.36e-15	6.69e-15	0.069	7.10e-15	6.44e-15	6.77e-15	0.069
0.100	2.79e-14	2.54e-14	2.67e-14	0.066	2.80e-14	2.55e-14	2.68e-14	0.066
0.200	2.15e-13	1.96e-13	2.06e-13	0.065	2.15e-13	1.96e-13	2.06e-13	0.065
0.5	1.06e-12	9.60e-13	1.01e-12	0.070	1.05e-12	9.53e-13	1.00e-12	0.069
1.0	2.48e-12	2.24e-12	2.36e-12	0.072	2.46e-12	2.22e-12	2.34e-12	0.073
2.0	5.25e-12	4.74e-12	5.00e-12	0.072	5.24e-12	4.74e-12	4.99e-12	0.071
5	1.17e-11	1.05e-11	1.11e-11	0.076	1.17e-11	1.05e-11	1.11e-11	0.076
Average				0.071				0.072

[a] Coefficient of variation

C.4 Aluminum

Because of the large differences in density and atomic number between the materials in the aluminum analysis and those in the steel and copper analysis, new MCNP calculations of dose rates are performed for all but one of the exposure geometries. The exception is the baghouse at an aluminum smelter. The difference in the composition of the dust is judged not to significantly affect the dose rates, given the attenuation by the filters, the steel walls, and the air. However, to derive the dose coefficients for individual nuclides, the elemental composition of the interior of the baghouse module is used to calculate the bremsstrahlung contribution, using the scaled bremsstrahlung spectra discussed in Section C.1.2.2.

The composition of the materials unique to the aluminum analysis is listed in Table C.57.

C.4.1 Aluminum Scrap Pile

The analysis of the aluminum scrap pile is modeled after that of the steel scrap pile described in Section C.2.1.1. Only the features that are unique to aluminum are described here.

The bulk density of the scrap is estimated on the basis of the bulk density of ferrous scrap:

$$\rho_{b,Al} = \frac{\rho_{b,s}\,\rho_{Al}}{\rho_s}$$

$\rho_{b,Al}$ = bulk density of aluminum alloy scrap
= 0.11 g/cm^3

$\rho_{b,s}$ = bulk density of steel scrap
= 0.32 g/cm^3

$\mathbf{D}_{Al}$ = density of aluminum
= 2.71 g/cm^3

$\mathbf{D}_s$ = density of steel
= 7.86 g/cm^3

Table C.57 Composition of materials unique to aluminum analysis (wt. fraction)

Element	Al scrap	Al dust	Dross	Baghouse[a]	Alloy 319	Alloy 383	Alloy 390
H				1.96e-04			
B				0.0103			
N				0.2331			
O		0.4311	0.1716	0.3984			
Na			0.0922	7.60e-03			
Mg	5.50e-04	0.0394		0.0171	0.0010	0.0010	0.0010
Al	0.9300	0.3940	0.3596	0.1736	0.8730	0.8165	0.7585
Si	0.0331			0.0969	0.0600	0.1050	0.1750
Cl			0.2102				
Ar				0.0040			
K			0.1663				
Ti	1.38e-03	0.0085		0.0037	0.0025		0.0020
Mn	0.0028	0.0012		5.22e-04	0.0050	0.0050	0.0010
Fe	0.0055	0.0939		0.0407	0.0100	0.0130	0.0130
Ni	0.0019				0.0035	0.0030	0.0035
Cu	0.0193	0.0118		0.0051	0.0350	0.0250	0.0450
Zn	0.0055	0.0201		0.0087	0.0100	0.0300	0.0010
Sn						0.0015	
D[b]	c	1.224	1.3	3.61e-03	2.79	2.74	d

[a] Baghouse interior: Al dust + fiberglass + moist air

[b] Density (g/cm^3), unless otherwise specified for individual exposure scenarios; bulk densities for aggregate materials such as dross and Al dust

[c] See descriptions of exposure geometries

[d] See description of engine block in Section C.4.9 for effective density used in analysis

The average size of a scrap pile at an aluminum scrap dealer is estimated to be approximately 100 tons (90.7 t). The radius, as calculated by Equation C.1, is 7.43 m.

Aluminum scrap is composed of various alloys but is known to contain 93% aluminum. In the present analysis, the aluminum scrap is assumed to be Alloy 319. The fractions of elements other than aluminum, listed in Table C.57, are calculated on the assumption that these elements make up 7% of the total weight of the scrap and are present in the same relative proportions as in Alloy 319.

The results of the aluminum scrap pile analysis are presented in Table C.58. The dose rates from the 12 monoenergetic photon sources are computed by MCNP at distances of 100 cm and 500 cm from the edge of the pile. The average effective coefficient of variation, which is listed at the bottom of the table, was calculated in the same way as in the analysis of the copper scrap pile described in Section C.3.1, again omitting the 10 keV dose rates. Based on these results, U_x for the aluminum scrap yard is assigned a uniform distribution: 0.5 # U_x # 1.5.

Table C.58 Dose rates from pile of aluminum scrap

Energy	Effective dose equivalent (Sv/s per Bq/g)						Effective dose (Sv/s per Bq/g)					
(MeV)	100 cm	500 cm	x_o (cm)	A_o	200 cm	F_D	100 cm	500 cm	x_o (cm)	A_o	200 cm	F_D
0.01	8.44e-17	1.85e-18	30.49	4.08e-13	1.42e-17	4.13e-17	7.04e-17	1.54e-18	30.57	3.39e-13	1.18e-17	3.44e-17
0.015	1.24e-15	1.64e-16	-128.61	6.48e-11	6.00e-16	5.38e-16	8.35e-16	1.11e-16	-129.53	4.40e-11	4.05e-16	3.62e-16
0.020	5.34e-15	1.10e-15	-232.42	5.90e-10	3.16e-15	2.12e-15	3.76e-15	7.73e-16	-231.82	4.14e-10	2.22e-15	1.49e-15
0.030	2.96e-14	7.79e-15	-321.37	5.26e-09	1.93e-14	1.09e-14	2.44e-14	6.41e-15	-320.59	4.32e-09	1.59e-14	9.00e-15
0.050	1.69e-13	5.06e-14	-383.36	3.95e-08	1.16e-13	5.92e-14	1.61e-13	4.81e-14	-382.20	3.74e-08	1.10e-13	5.65e-14
0.070	4.22e-13	1.33e-13	-411.99	1.11e-07	2.95e-13	1.45e-13	4.28e-13	1.34e-13	-408.14	1.11e-07	2.99e-13	1.47e-13
0.100	9.35e-13	3.04e-13	-430.68	2.63e-07	6.62e-13	3.16e-13	9.37e-13	3.05e-13	-431.39	2.65e-07	6.64e-13	3.16e-13
0.2	2.86e-12	9.44e-13	-440.11	8.34e-07	2.04e-12	9.58e-13	2.86e-12	9.44e-13	-440.11	8.34e-07	2.04e-12	9.58e-13
0.5	8.73e-12	2.87e-12	-437.58	2.52e-06	6.21e-12	2.93e-12	8.66e-12	2.85e-12	-438.24	2.51e-06	6.16e-12	2.91e-12
1.0	1.87e-11	6.16e-12	-438.84	5.43e-06	1.33e-11	6.27e-12	1.85e-11	6.10e-12	-439.45	5.38e-06	1.32e-11	6.20e-12
2	3.81e-11	1.27e-11	-446.41	1.14e-05	2.72e-11	1.27e-11	3.81e-11	1.27e-11	-446.41	1.14e-05	2.72e-11	1.27e-11
5.0	8.98e-11	3.05e-11	-458.75	2.80e-05	6.46e-11	2.97e-11	8.97e-11	3.04e-11	-457.30	2.79e-05	6.45e-11	2.97e-11
Average[a]					1.04e-11	0.46[b]					1.04e-11	0.46[b]

[a] Omits 0.010 MeV values—see text

[b] Average effective coefficient of variation—see text

C.4.2 Dross Pile

The analysis of the aluminum dross pile is modeled after that of the steel slag pile described in Section C.2.2. Only the features that are unique to aluminum are described here.

The mass of the pile is based on the average amount of dross on hand at a secondary aluminum smelter, which is calculated as follows. The average production capacity of the 18 smelters listed in Table D.10 is about 82.2 kt/y. The average mass fraction of dross, based on the probability distribution presented in Table B.7, is 0.16. Dross is typically removed from a smelter once a month. Consequently, the average amount of dross that would be on hand at any one time is one half of a month's production, or $\frac{1}{24}$ of the annual production. Consequently, the mass of the pile is 548 t (82,200 t × 0.16 ÷ 24 = 548 t). The radius, as calculated by Equation C.1, is 5.86 m.

The results of the aluminum dross pile analysis are presented in Table C.59. The dose rates from the 12 monoenergetic photon sources are computed by MCNP at distances of 100 cm and 500 cm from the edge of the pile. The average effective coefficient of variation is calculated in the same way as in the analysis of the copper scrap pile described in Section C.3.1, again omitting

the 10 keV dose rates. Based on these results, U_x for dross handling is assigned a uniform distribution: 0.4 # U_x # 1.6.

Table C.59 Dose rates from pile of aluminum dross

Energy (MeV)	Effective dose equivalent (Sv/s per Bq/g)						Effective dose (Sv/s per Bq/g)					
	100 cm	500 cm	x_o (cm)	A_o	200 cm	F_D	100 cm	500 cm	x_o (cm)	A_o	200 cm	F_D
0.010	6.66e-17	1.39e-18	32.45	3.04e-13	1.08e-17	3.26e-17	5.56e-17	1.16e-18	32.47	2.54e-13	9.03e-18	2.72e-17
0.015	1.00e-15	1.19e-16	-110.65	4.44e-11	4.60e-16	4.41e-16	6.74e-16	8.01e-17	-110.44	2.98e-11	3.10e-16	2.97e-16
0.020	4.33e-15	7.90e-16	-198.25	3.85e-10	2.43e-15	1.77e-15	3.05e-15	5.57e-16	-198.50	2.72e-10	1.71e-15	1.25e-15
0.030	2.44e-14	5.67e-15	-272.28	3.38e-09	1.52e-14	9.37e-15	2.02e-14	4.67e-15	-270.45	2.77e-09	1.25e-14	7.77e-15
0.050	1.47e-13	3.81e-14	-314.83	2.53e-08	9.54e-14	5.45e-14	1.41e-13	3.62e-14	-310.85	2.38e-08	9.12e-14	5.24e-14
0.070	3.90e-13	1.04e-13	-327.13	7.12e-08	2.56e-13	1.43e-13	3.95e-13	1.05e-13	-325.73	7.16e-08	2.59e-13	1.45e-13
0.100	9.17e-13	2.48e-13	-333.41	1.72e-07	6.05e-13	3.35e-13	9.18e-13	2.48e-13	-332.92	1.72e-07	6.06e-13	3.35e-13
0.200	3.05e-12	8.18e-13	-329.66	5.63e-07	2.01e-12	1.12e-12	3.05e-12	8.18e-13	-329.66	5.63e-07	2.01e-12	1.12e-12
0.5	9.95e-12	2.60e-12	-318.30	1.74e-06	6.48e-12	3.68e-12	9.87e-12	2.58e-12	-318.45	1.73e-06	6.43e-12	3.65e-12
1	2.22e-11	5.73e-12	-313.08	3.79e-06	1.44e-11	8.24e-12	2.20e-11	5.68e-12	-313.20	3.76e-06	1.43e-11	8.16e-12
2.0	4.79e-11	1.23e-11	-310.93	8.09e-06	3.10e-11	1.78e-11	4.78e-11	1.23e-11	-311.80	8.11e-06	3.09e-11	1.78e-11
5.0	1.22e-10	3.13e-11	-310.56	2.06e-05	7.89e-11	4.54e-11	1.22e-10	3.12e-11	-309.23	2.04e-05	7.88e-11	4.54e-11
Average[a]					1.22e-11	0.57[b]					1.21e-11	0.57[b]

[a] Omits 0.010 MeV values—see text

[b] Average effective coefficient of variation (see text)

C.4.3 Large Aluminum Object

The generic large aluminum object is made of Alloy 319, a common aluminum alloy. The exposure geometry is the same as that for the large steel object.

The results of the analysis are presented in Table C.60. The dose rates from the 12 monoenergetic photon sources are computed by MCNP at the three locations described in Section C.2.5. The coefficient of variation is calculated in the conventional manner, based on the mean and standard deviation at each energy. The values of C_v for the 10 keV source are considerably higher than for the other sources. Since, as was discussed in Section C.2.2, photons in this low-energy range make only minor contributions to the dose coefficients of most of the radionuclides in the present analysis, $\overline{C_v}$ is calculated on the basis of the 11 sources, $E_{(}$ > 10 keV. Based on these results, U_x for the large aluminum object is assigned the uniform distribution: 0.2 # U_x # 1.8.

C.4.4 Small Aluminum Object

The generic small aluminum object is also made of Alloy 319. The exposure geometry is the same as that for the small steel object.

The results of the analysis are presented in Table C.61. The dose rates from the 12 monoenergetic photon sources are computed by MCNP at the three locations described in Section C.2.6. Because of the large variation of dose rate with distance, U_x is assigned a

specially constructed distribution. By fitting parameters to the data, we derive the following Crystal Ball distribution: $U_x = 0.2 + 8.8 \times \text{Beta}(\text{"}, \$, s)$, with " = 0.7034602, $ = 7.034602, s = 1.

Table C.60 Dose rates from large aluminum object

Energy (MeV)	Effective dose equivalent (Sv/s per Bq/g)				Effective dose (Sv/s per Bq/g)			
	100 cm	200 cm	300 cm	C_V[a]	100 cm	200 cm	300 cm	C_V[a]
0.010	1.97e-17	3.88e-18	1.09e-18	1.00	1.64e-17	3.23e-18	9.08e-19	1.22
0.015	2.40e-16	7.09e-17	2.97e-17	0.98	1.61e-16	4.77e-17	1.99e-17	0.98
0.02	9.71e-16	3.15e-16	1.45e-16	0.91	6.85e-16	2.22e-16	1.02e-16	0.92
0.03	5.19e-15	1.78e-15	8.60e-16	0.87	4.29e-15	1.47e-15	7.11e-16	0.87
0.050	2.68e-14	9.60e-15	4.89e-15	0.84	2.56e-14	9.17e-15	4.66e-15	0.84
0.070	5.55e-14	2.06e-14	1.09e-14	0.81	5.64e-14	2.09e-14	1.10e-14	0.81
0.100	9.93e-14	3.79e-14	2.05e-14	0.79	9.95e-14	3.80e-14	2.06e-14	0.79
0.200	2.30e-13	8.88e-14	4.87e-14	0.78	2.31e-13	8.88e-14	4.88e-14	0.78
0.500	5.79e-13	2.14e-13	1.14e-13	0.81	5.73e-13	2.12e-13	1.13e-13	0.81
1	1.07e-12	3.85e-13	2.00e-13	0.83	1.06e-12	3.81e-13	1.99e-13	0.83
2.0	1.86e-12	6.54e-13	3.34e-13	0.85	1.87e-12	6.55e-13	3.34e-13	0.85
5.0	3.72e-12	1.28e-12	6.47e-13	0.86	3.71e-12	1.28e-12	6.46e-13	0.86
Average[b]				0.85				0.85

[a] Coefficient of variation

[b] Omits 0.010 MeV values—see text

C.4.5 Aluminum Scrap Truck

The aluminum scrap would most likely be hauled in a dump trailer, such as the Mark 2 Scrapstar, manufactured by Clement Industries. The Mark 2, Clement's most popular large-capacity trailer, has the following inside dimensions: 77 inches high, 37 feet long, 85¼ inches wide (1.96 × 11.3 × 2.16 m).[18] A typical load of aluminum scrap arriving at a secondary smelter weighs 45,000 lb (20.41 t).[19] Assuming that this load completely fills the volume of the trailer, the scrap would have an effective density of 0.4274 g/cm^3.

The tractor hauling this trailer is assumed to be the same as the one used to haul the trailer carrying steel scrap, described in Section C.2.8.1. The detailed geometry is presented in Table C.62.

[18] Brandt Miller, Clement Industries, private communication with Robert Anigstein, SC&A, Inc., September 23, 2002.

[19] Robert H. Graham, plant manager, Wabash Alloys, Dickson TN, private communication with William C. Thurber, SC&A, Inc., May 2, 1997.

Table C.61 Dose rates from small aluminum object

Energy (MeV)	Effective dose equivalent (Sv/s per Bq/g)			Effective dose (Sv/s per Bq/g)		
	100 cm	200 cm	300 cm	100 cm	200 cm	300 cm
0.010	2.07e-18	2.93e-19	7.37e-20	1.73e-18	2.44e-19	6.15e-20
0.015	2.30e-17	4.92e-18	1.87e-18	1.55e-17	3.31e-18	1.26e-18
0.020	9.10e-17	2.15e-17	8.97e-18	6.42e-17	1.52e-17	6.32e-18
0.030	4.82e-16	1.21e-16	5.34e-17	3.99e-16	9.98e-17	4.41e-17
0.050	2.59e-15	6.93e-16	3.25e-16	2.48e-15	6.61e-16	3.09e-16
0.070	5.55e-15	1.56e-15	7.65e-16	5.64e-15	1.58e-15	7.72e-16
0.100	1.00e-14	2.94e-15	1.50e-15	1.01e-14	2.95e-15	1.50e-15
0.2	2.35e-14	6.97e-15	3.62e-15	2.35e-14	6.98e-15	3.63e-15
0.500	6.07e-14	1.69e-14	8.41e-15	6.00e-14	1.67e-14	8.34e-15
1.0	1.15e-13	3.05e-14	1.46e-14	1.14e-13	3.03e-14	1.45e-14
2.0	2.03e-13	5.24e-14	2.43e-14	2.03e-13	5.25e-14	2.44e-14
5.0	4.09e-13	1.04e-13	4.73e-14	4.09e-13	1.04e-13	4.73e-14

Table C.62 Aluminum scrap truck driver exposure geometry (cm)

Location		Thickness	X		Y		Z	
			Min	Max	Min	Max	Min	Max
Load			0	-1128	-108.3	108.3	0	195.6
Trailer—SAE 1020 steel	4 sides	0.476	0.476	-1128.5	-108.8	108.8	0.0	195.6
	Floor	0.635	0.476	-1128.5	-108.8	108.8	-0.6	0.0
Truck cab—SAE 1020 steel	6 walls	0.15	213	396	-107	107	0	152.4
Pavement—concrete		—					—	-125
Tally points (TP)		1	244		53		76.2	
		2	335					

The results of the analysis are presented in Table C.63. The dose rates from 10 of the 12 monoenergetic photon sources are computed by MCNP at the two locations specified in Table C.62. Because of the strong absorption of low-energy photons by the walls of the truck cab, the dose rates from 10 and 15 keV sources are too low to be statistically meaningful and are therefore not listed. The average of the dose rates at the two tally points is adopted as the dose rate from each of the 10 photon sources in this exposure geometry. $\overline{C_v}$ is calculated on the basis of these 10 sources. Based on these results, U_x for the driver of the aluminum scrap truck is assigned the uniform distribution: 0.7 # U_x # 1.3.

C.4.6 Dross Truck

The exposure geometry for the truck driver hauling dross from a secondary aluminum smelter is almost the same as for the truck hauling steel slag, the only difference being the composition and density of the dross. Dross, having a lower density than steel slag, would fill the trailer to a greater depth. The details of the exposure geometry are presented in Table C.64.

Table C.63 Dose rates to aluminum scrap truck driver

Energy (MeV)	Effective dose equivalent (Sv/s per Bq/g)				Effective dose (Sv/s per Bq/g)			
	TP 1	TP 2	Mean	C_v[a]	TP 1	TP 2	Mean	C_v[a]
0.020	3.38e-34	1.01e-33	6.74e-34	0.71	1.28e-34	3.69e-34	2.49e-34	0.69
0.030	1.31e-22	1.99e-22	1.65e-22	0.29	6.93e-23	1.07e-22	8.82e-23	0.30
0.050	1.86e-17	1.98e-17	1.92e-17	0.04	1.40e-17	1.48e-17	1.44e-17	0.04
0.07	2.33e-15	1.59e-15	1.96e-15	0.27	2.03e-15	1.38e-15	1.71e-15	0.27
0.100	3.97e-14	2.47e-14	3.22e-14	0.33	3.61e-14	2.24e-14	2.93e-14	0.33
0.200	4.04e-13	2.53e-13	3.29e-13	0.33	3.73e-13	2.33e-13	3.03e-13	0.33
0.500	1.71e-12	1.07e-12	1.39e-12	0.33	1.60e-12	9.98e-13	1.30e-12	0.33
1.0	3.90e-12	2.41e-12	3.16e-12	0.33	3.66e-12	2.26e-12	2.96e-12	0.33
2.0	8.12e-12	5.02e-12	6.57e-12	0.33	7.64e-12	4.72e-12	6.18e-12	0.33
5.0	1.91e-11	1.20e-11	1.56e-11	0.32	1.77e-11	1.11e-11	1.44e-11	0.32
				0.32				0.32

[a] Coefficient of variation

Table C.64 Dross truck driver exposure geometry (cm)

Location		Thickness	X		Y		Z	
			Min	Max	Min	Max	Min	Max
Load			-731.5	0.0	-121.9	121.9	137.2	223.4
Truck cab—aluminum		0.3175	153.0	363.9	-121.9	121.9	66.5	245.4
Trailer aluminum	floor	0.635	-731.5	0.0	-121.9	121.9	136.5	137.2
	nose & tail[a]	0.4826	-731.5	0.0	-121.9	121.9	137.2	259.1
	sides[b]	0.4064	-731.5	0.0	-121.9	121.9	137.2	259.1
Pavement—concrete		40.6					-40.6	0.0
Tally points (TP)		1	243.8		61.0		168.4	
		2	335.3					

[a] x-min and x-max refer to tail and nose, respectively

[b] y-min and y-max refer to right and left sides, respectively

The results of the analysis are presented in Table C.65. The dose rates from 11 of the 12 monoenergetic photon sources are computed by MCNP at the two locations specified in Table C.64. Because of the strong absorption of low-energy photons by the walls of the truck cab, the dose rates from the 10 keV source are too low to be statistically meaningful and are therefore not listed. The average of the dose rates at the two tally points is adopted as the dose rate from each of the 11 photon sources in this exposure geometry. $\overline{C_v}$ is calculated on the basis of these 11 sources. Based on these results, U_x for the driver of the aluminum dross truck is assigned the uniform distribution: 0.7 # U_x # 1.3.

Table C.65 Dose rates to dross truck driver

Energy (MeV)	Effective dose equivalent (Sv/s per Bq/g)				Effective dose (Sv/s per Bq/g)			
	TP 1	TP 2	Mean	C_v[a]	TP 1	TP 2	Mean	C_v[a]
0.015	6.54e-24	5.59e-24	6.07e-24	0.11	4.76e-23	3.39e-23	4.08e-23	0.24
0.020	4.41e-19	2.71e-19	3.56e-19	0.34	1.60e-19	9.85e-20	1.29e-19	0.34
0.030	3.36e-16	1.98e-16	2.67e-16	0.37	1.89e-16	1.11e-16	1.50e-16	0.37
0.050	1.25e-14	7.73e-15	1.01e-14	0.33	9.66e-15	5.97e-15	7.82e-15	0.33
0.070	4.72e-14	2.97e-14	3.85e-14	0.32	4.04e-14	2.53e-14	3.29e-14	0.33
0.100	1.27e-13	8.12e-14	1.04e-13	0.31	1.14e-13	7.25e-14	9.33e-14	0.31
0.200	4.49e-13	2.86e-13	3.68e-13	0.31	4.12e-13	2.61e-13	3.37e-13	0.32
0.500	1.37e-12	8.55e-13	1.11e-12	0.33	1.27e-12	7.95e-13	1.03e-12	0.33
1.0	2.86e-12	1.75e-12	2.31e-12	0.34	2.68e-12	1.64e-12	2.16e-12	0.34
2.0	5.78e-12	3.51e-12	4.65e-12	0.35	5.43e-12	3.30e-12	4.37e-12	0.35
5.0	1.38e-11	8.34e-12	1.11e-11	0.35	1.28e-11	7.74e-12	1.03e-11	0.35
Average				0.31				0.33

[a] Coefficient of variation

C.4.7 Aluminum Dust Truck

The exposure geometry for the truck driver hauling dust from a secondary aluminum smelter is almost the same as for the truck hauling dross, the only difference being the different composition and density of the aluminum smelter dust. Aluminum dust, having a lower density than dross, would fill the trailer to a greater depth. The details of the exposure geometry are presented in Table C.66.

Table C.66 Aluminum dust truck driver exposure geometry (cm)

Location		Thickness	X		Y		Z	
			Min	Max	Min	Max	Min	Max
Load			-731.5	0.0	-121.9	121.9	137.2	228.6
Truck cab—aluminum		0.3175	153.0	363.9	-121.9	121.9	66.5	245.4
Trailer—aluminum	floor	0.635	-731.5	0.0	-121.9	121.9	136.5	137.2
	nose & tail[a]	0.4826	-731.5	0.0	-121.9	121.9	137.2	259.1
	sides[b]	0.4064	-731.5	0.0	-121.9	121.9	137.2	259.1
Pavement—concrete		40.6					-40.6	0.0
Tally points (TP)		1	243.8		61.0		168.4	
		2	335.3					

[a] x-min and x-max refer to tail and nose, respectively

[b] y-min and y-max refer to right and left sides, respectively

The results of the analysis are presented in Table C.67. The dose rates from 11 of the 12 monoenergetic photon sources are computed by MCNP at the two locations specified in Table C.66. Because of the strong absorption of low-energy photons by the walls of the truck cab, the dose rates from the 10 keV source are too low to be statistically meaningful and are therefore not

listed. The average of the dose rates at the two tally points is adopted as the dose rate from each of the 11 photon sources in this exposure geometry. $\overline{C_v}$ is calculated on the basis of these 11 sources. Based on these results, U_x for the driver of the aluminum dust truck is assigned a uniform distribution: 0.7 # U_x # 1.3.

Table C.67 Dose rates to aluminum dust truck driver

Energy (MeV)	Effective dose equivalent (Sv/s per Bq/g)				Effective dose (Sv/s per Bq/g)			
	TP 1	TP 2	Mean	C_v [a]	TP 1	TP 2	Mean	C_v [a]
0.015	6.73e-24	5.84e-24	6.29e-24	0.10	4.67e-23	3.37e-23	4.02e-23	0.23
0.020	4.11e-19	2.55e-19	3.33e-19	0.33	1.50e-19	9.29e-20	1.21e-19	0.33
0.030	3.00e-16	1.78e-16	2.39e-16	0.36	1.69e-16	9.97e-17	1.34e-16	0.36
0.050	1.10e-14	6.78e-15	8.89e-15	0.34	8.50e-15	5.24e-15	6.87e-15	0.34
0.070	4.20e-14	2.64e-14	3.42e-14	0.32	3.61e-14	2.25e-14	2.93e-14	0.33
0.100	1.18e-13	7.46e-14	9.63e-14	0.32	1.06e-13	6.68e-14	8.64e-14	0.32
0.200	4.44e-13	2.82e-13	3.63e-13	0.32	4.07e-13	2.58e-13	3.33e-13	0.32
0.500	1.40e-12	8.72e-13	1.14e-12	0.33	1.30e-12	8.12e-13	1.06e-12	0.33
1.0	2.94e-12	1.81e-12	2.38e-12	0.34	2.76e-12	1.69e-12	2.23e-12	0.34
2.0	6.00e-12	3.64e-12	4.82e-12	0.35	5.63e-12	3.42e-12	4.53e-12	0.35
5.0	1.45e-11	8.77e-12	1.16e-11	0.35	1.34e-11	8.13e-12	1.08e-11	0.35
				0.31				0.33

[a] Coefficient of variation

C.4.8 Truck Loaded with Aluminum Product

Aluminum ingots are the main product of secondary aluminum smelters. Such ingots would most likely be shipped on a flat-bed trailer. The exposure geometry is similar to that of the truck hauling steel products described in Section C.2.8.5. The main differences are that the load is modeled as a single rectangular solid and that the trailer in the present case is only 28 ft (8.5 m) long, such a trailer being adequate to transport a 22-ton (20-t) load of ingots. The ingots are made of Alloy 319, which has a density of 2.79 g/cm^3. The ingots are assumed to completely cover the 8-ft (2.44-m) wide floor of the trailer. The height of the load above the trailer floor is calculated by dividing the volume by the area of the floor. The details of the exposure geometry are shown in Table C.68.

The results of the analysis are presented in Table C.69. The dose rates from 11 of the 12 monoenergetic photon sources are computed by MCNP at the two locations specified in Table C.68. Because of the strong absorption of low-energy photons by the walls of the truck cab, the dose rates from the 10 keV source are too low to be statistically meaningful and are therefore not listed. The average of the dose rates at the two tally points is adopted as the dose rate from each of the 11 photon sources in this exposure geometry. $\overline{C_v}$ is calculated on the basis of these 11 sources. Based on these results, U_x for the driver of the aluminum product truck is assigned the uniform distribution: 0.7 # U_x # 1.3.

Table C.68 Aluminum products truck driver exposure geometry (cm)

Location	Thickness	X		Y		Z	
		Min	Max	Min	Max	Min	Max
Load	34.34	-853.4	0.0	-121.9	121.9	137.2	171.5
Truck cab—aluminum	0.3175	153.0	363.9	-121.9	121.9	66.5	245.4
Trailer floor—aluminum[a]	3.175	-1219.2	0.0	-121.9	121.9	134.0	137.2
Pavement—concrete	40.64					-40.6	0.0
Tally points (TP)	1	243.8		61.0		168.4	
	2	335.3					

[a] Floor is extruded aluminum honeycomb, estimated effective density = 1 g/cm^3

Table C.69 Dose rates to aluminum product truck driver

Energy (MeV)	Effective dose equivalent (Sv/s per Bq/g)				Effective dose (Sv/s per Bq/g)			
	TP 1	TP 2	Mean	C_v[a]	TP 1	TP 2	Mean	C_v[a]
0.015	1.85e-20	1.00e-20	1.43e-20	0.42	1.13e-20	6.13e-21	8.72e-21	0.42
0.02	8.63e-18	4.82e-18	6.73e-18	0.40	3.05e-18	1.70e-18	2.38e-18	0.40
0.03	4.86e-16	2.84e-16	3.85e-16	0.37	2.73e-16	1.59e-16	2.16e-16	0.37
0.050	7.64e-15	4.80e-15	6.22e-15	0.32	5.89e-15	3.68e-15	4.79e-15	0.33
0.070	2.57e-14	1.67e-14	2.12e-14	0.30	2.20e-14	1.42e-14	1.81e-14	0.30
0.100	6.90e-14	4.52e-14	5.71e-14	0.29	6.16e-14	4.03e-14	5.10e-14	0.30
0.200	2.46e-13	1.61e-13	2.04e-13	0.30	2.25e-13	1.47e-13	1.86e-13	0.30
0.500	7.28e-13	4.67e-13	5.98e-13	0.31	6.76e-13	4.33e-13	5.55e-13	0.31
1.0	1.46e-12	9.18e-13	1.19e-12	0.32	1.37e-12	8.58e-13	1.11e-12	0.33
2.0	2.85e-12	1.75e-12	2.30e-12	0.34	2.67e-12	1.64e-12	2.16e-12	0.34
5.0	6.64e-12	4.01e-12	5.33e-12	0.35	6.16e-12	3.72e-12	4.94e-12	0.35
Average				0.34				0.34

[a] Coefficient of variation

C.4.9 Auto—Aluminum Engine Block

The exposure geometry of the automobile with an aluminum engine block is the same as that of the car with a cast iron engine block, the only difference being the weight and material of the block. The block is made of Alloy 390 and weighs 59 lb (26.8 kg) (GMPartsDirect.com [n/d]). The dimensions of the block, as stated in Section C.2.11, are 56 × 40 × 48 cm. The effective density: $\frac{M}{V}$ = 0.249 g/cm^3.

The results of the analysis are presented in Table C.70, which lists the dose rates from the 12 monoenergetic photon sources. The average of the dose rates at the two tally points is adopted as the dose rate from each of the sources. $\overline{C_v}$ is calculated on the basis of all the sources. Based on these results, U_x for the driver of the automobile with an aluminum engine block is assigned the uniform distribution: 0.9 # U_x # 1.1.

Table C.70 Dose rates to driver of automobile with aluminum engine block

Energy (MeV)	Effective dose equivalent (Sv/s per Bq/g)				Effective dose (Sv/s per Bq/g)			
	TP 1	TP 2	Mean	C_v[a]	TP 1	TP 2	Mean	C_v[a]
0.010	2.74e-34	2.31e-34	2.53e-34	0.12	2.14e-34	1.81e-34	1.98e-34	0.12
0.015	1.01e-31	9.77e-32	9.94e-32	0.02	8.06e-32	7.77e-32	7.92e-32	0.03
0.020	1.14e-22	1.07e-22	1.11e-22	0.04	9.85e-23	9.22e-23	9.54e-23	0.05
0.03	3.18e-17	2.81e-17	3.00e-17	0.09	2.89e-17	2.56e-17	2.73e-17	0.09
0.050	6.76e-15	5.77e-15	6.27e-15	0.11	6.28e-15	5.36e-15	5.82e-15	0.11
0.070	2.78e-14	2.36e-14	2.57e-14	0.12	2.70e-14	2.30e-14	2.50e-14	0.11
0.100	6.52e-14	5.55e-14	6.04e-14	0.11	6.33e-14	5.39e-14	5.86e-14	0.11
0.200	1.76e-13	1.51e-13	1.64e-13	0.11	1.71e-13	1.46e-13	1.59e-13	0.11
0.500	4.31e-13	3.68e-13	4.00e-13	0.11	4.18e-13	3.57e-13	3.88e-13	0.11
1.0	7.62e-13	6.49e-13	7.06e-13	0.11	7.42e-13	6.32e-13	6.87e-13	0.11
2.0	1.27e-12	1.08e-12	1.18e-12	0.11	1.24e-12	1.05e-12	1.15e-12	0.12
5.0	2.44e-12	2.07e-12	2.26e-12	0.12	2.34e-12	1.98e-12	2.16e-12	0.12
Average				0.10				0.10

[a] Coefficient of variation

C.4.10 Aluminum Cooking Pot

The aluminum cooking pot is based on a 4-qt (3.8-L) Presto cast aluminum pressure cooker.[20] The pot is assumed to be made of Alloy 383, which has a density of 2.74 g/cm^3. A schematic diagram of this utensil is shown in Figure C.14. Like the large and small metal object exposure geometries, this generic scenario utilizes rotational symmetry. The pot is in a cylindrical concrete room, 2 m high and 4 m in diameter. The center of the pot is 1 m above the floor. The dose rates are calculated at a distance of 1 m from the center of the pot, at a height of 1 m above the floor. The rotational symmetry enables MCNP to utilize the ring detector for greater computational efficiency. Since the exposed individual would be facing the pot, the dose calculations are based on the anteroposterior (AP) irradiation geometry. The details of the exposure geometry for this scenario are presented in Table C.71.

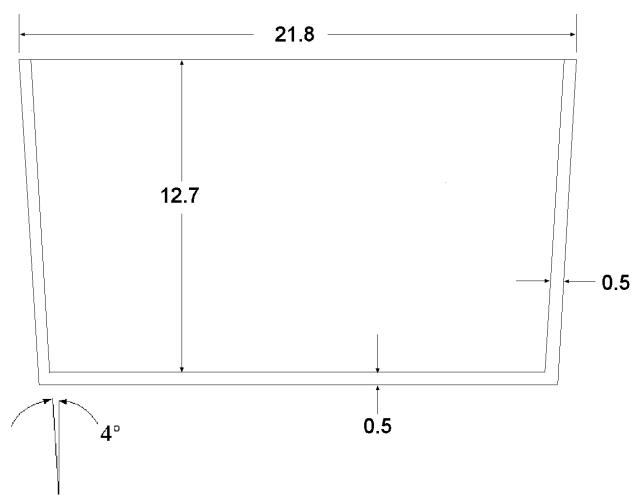

Figure C.14 Aluminum cooking pot

[20] National Presto Industries, Inc. no longer produces cast aluminum pressure cookers. However, this earlier vessel is used as a surrogate for a generic cooking utensil.

Table C.71 Cooking pot exposure geometry (cylindrical coordinates) (cm)

Location			Thickness	r		Z	
				Min	Max	Min	Max
Pot	Apex of cone (½-angle = 4)	Outside		—	—	0.0	
		Inside		—	—	7.168	
	Bottom		0.5	—	—	142.677	143.177
	Sides		0.5	—	—	142.677	155.877
Room	Concrete	Wall—cylinder		200	r_{min} + 3 MFPs	51.237	301.237
		Floor—slab	3 MFPs			z_{max} ! 3 MFPs	51.237
		Ceiling—slab				301.237	z_{max} + 3 MFPs
	moist air	cylinder		0	200	51.237	301.237
Tally: ring detector				100		151.237	

The results of the analysis are presented in Table C.72, which lists the dose rates from the 12 monoenergetic photon sources. Since the doses are calculated at a single distance, there is no basis for determining uncertainty based on variation of location. U_x for aluminum cookware is therefore assigned the fixed value, $U_x = 1$.

Table C.72 Dose rates from aluminum cookware

Energy (MeV)	EDE (Sv/s per Bq/g)	Effective dose (Sv/s per Bq/g)
0.010	2.35e-18	1.84e-18
0.015	2.65e-17	2.11e-17
0.020	1.02e-16	8.81e-17
0.030	4.87e-16	4.43e-16
0.050	2.04e-15	1.89e-15
0.070	3.73e-15	3.62e-15
0.100	6.06e-15	5.88e-15
0.200	1.30e-14	1.27e-14
0.500	3.03e-14	2.94e-14
1.0	5.34e-14	5.20e-14
2.0	8.90e-14	8.69e-14
5.0	1.72e-13	1.66e-13

C.5 Concrete

The two external exposure geometries in the concrete analysis are based on those in the analyses of other materials. Because of differences in size and materials, however, new MCNP calculations of dose rates are performed for these scenarios. Only the features which are unique to the concrete analysis are discussed in the next two sections.

C.5.1 Concrete Pile

The concrete pile exposure geometry is similar to the exposure geometries for piles of scrap metal. The size of the pile is assumed to be 2,000 t—one week's production at a facility that processes a nominal 100 kt/y—which is comparable to the rate of clearance from a BWR or PWR nuclear power plant during dismantlement. The bulk density of the concrete rubble can vary greatly. For the purpose of the present analysis, we assume that the rubble would be sufficiently compacted to enable a 20-t load to be shipped in one large truck-trailer. As shown in Section C.5.2, this corresponds to a bulk density of 0.4 g/cm^3. The radius of this pile, as calculated by Equation C.1, is 3.37 m.

The results of the concrete rubble pile analysis are presented in Table C.73. The dose rates from the 12 monoenergetic photon sources are computed by MCNP at distances of 100 cm and 500 cm from the edge of the pile. The average effective coefficient of variation, which is listed at the bottom of the table, was calculated in the same way as in the analysis of the copper scrap pile described in Section C.3.1, again omitting the 10 keV dose rates. Based on these results, U_x for concrete processing is assigned a uniform distribution: 0.6 # U_x # 1.4.

Table C.73 Dose rates from pile of concrete rubble

Energy (MeV)	Effective dose equivalent (Sv/s per Bq/g)						Effective dose (Sv/s per Bq/g)					
	100 cm	500 cm	x_o (cm)	A_o	200 cm	F_D	100 cm	500 cm	x_o (cm)	A_o	200 cm	F_D
0.01	1.20e-16	3.10e-18	23.40	7.04e-13	2.26e-17	5.85e-17	9.98e-17	2.58e-18	23.36	5.86e-13	1.88e-17	4.86e-17
0.015	1.84e-15	3.05e-16	-174.69	1.39e-10	9.89e-16	7.68e-16	1.24e-15	2.05e-16	-174.08	9.31e-11	6.66e-16	5.18e-16
0.02	8.02e-15	2.12e-15	-323.28	1.44e-09	5.25e-15	2.95e-15	5.65e-15	1.49e-15	-322.26	1.01e-09	3.69e-15	2.08e-15
0.030	4.51e-14	1.56e-14	-471.18	1.47e-08	3.27e-14	1.48e-14	3.73e-14	1.28e-14	-465.72	1.19e-08	2.69e-14	1.23e-14
0.050	2.57e-13	1.01e-13	-572.08	1.16e-07	1.95e-13	7.80e-14	2.45e-13	9.55e-14	-564.78	1.08e-07	1.85e-13	7.48e-14
0.070	6.32e-13	2.58e-13	-607.81	3.17e-07	4.85e-13	1.87e-13	6.38e-13	2.59e-13	-602.37	3.15e-07	4.89e-13	1.90e-13
0.100	1.37e-12	5.69e-13	-625.05	7.20e-07	1.06e-12	4.01e-13	1.37e-12	5.69e-13	-625.05	7.20e-07	1.06e-12	4.01e-13
0.200	4.09e-12	1.70e-12	-625.83	2.15e-06	3.16e-12	1.20e-12	4.09e-12	1.70e-12	-625.83	2.15e-06	3.16e-12	1.20e-12
0.500	1.25e-11	5.11e-12	-609.18	6.29e-06	9.60e-12	3.70e-12	1.24e-11	5.07e-12	-609.36	6.24e-06	9.53e-12	3.67e-12
1.0	2.72e-11	1.10e-11	-598.70	1.33e-05	2.08e-11	8.10e-12	2.69e-11	1.09e-11	-600.58	1.32e-05	2.06e-11	8.00e-12
2.0	5.76e-11	2.33e-11	-598.94	2.81e-05	4.41e-11	1.72e-11	5.76e-11	2.33e-11	-598.94	2.81e-05	4.41e-11	1.72e-11
5.0	1.48e-10	6.01e-11	-602.67	7.31e-05	1.13e-10	4.40e-11	1.48e-10	6.00e-11	-601.06	7.27e-05	1.13e-10	4.40e-11
Average[a]					1.75e-11	0.39[b]					1.75e-11	0.39[b]

[a] Omits 0.010 MeV values—see text

[b] Average effective coefficient of variation—see text

C.5.2 Concrete Truck

The 22-ton (20-t) load of concrete rubble is assumed to be carried in an aluminum trailer. The inside of the trailer is 40 ft long × 8 ft wide × 66 inches high (12.19× 2.44 × 1.68 m), with a calculated volume of 1760 ft^3 (49.84 m^3). Assuming that the rubble just fills the trailer, it would have a bulk density of 0.40 g/cm^3. The cab of the truck is the same as that of the truck hauling steel products, described in Section C.2.8.5. The detailed exposure geometry is described in Table C.74.

Table C.74 Concrete truck driver exposure geometry (cm)

Location		Thickness	X		Y		Z	
			Min	Max	Min	Max	Min	Max
Load			-1219.2	0.0	-121.9	121.9	137.2	304.8
Truck cab—aluminum		0.3175	153.0	363.9	-121.9	121.9	66.5	245.4
Trailer—aluminum	floor	0.635	-1219.2	0.0	-121.9	121.9	136.5	137.2
	nose&tail[a]	0.4826	-1219.2	0.0	-121.9	121.9	137.2	304.8
	sides[b]	0.4064	-1219.2	0.0	-121.9	121.9	137.2	304.8
Pavement—concrete								0.0
Tally points		1	243.8		61.0		168.4	
		2	335.3					

[a] x-min and x-max refer to tail and nose, respectively

[b] y-min and y-max refer to right and left sides, respectively

The results of the analysis are presented in Table C.75. The dose rates from 11 of the 12 monoenergetic photon sources are computed by MCNP at the two locations specified in Table C.74. Because of the strong absorption of low-energy photons by the walls of the truck cab, the dose rates from the 10 keV source are too low to be statistically meaningful and are therefore not listed. The average of the dose rates at the two tally points is adopted as the dose rate from each of the 11 photon sources in this exposure geometry. $\overline{C_v}$ is calculated on the basis of these 11 sources. Based on these results, U_x for the truck driver transporting concrete rubble is assigned a uniform distribution: 0.7 # U_x # 1.3.

Table C.75 Dose rates to concrete rubble truck driver

Energy (MeV)	Effective dose equivalent (Sv/s per Bq/g)				Effective dose (Sv/s per Bq/g)			
	TP 1	TP 2	Mean	C_v[a]	TP 1	TP 2	Mean	C_v[a]
0.015	7.72e-24	4.47e-24	6.10e-24	0.38	6.33e-23	3.00e-23	4.67e-23	0.50
0.020	8.05e-19	5.11e-19	6.58e-19	0.32	2.91e-19	1.84e-19	2.38e-19	0.32
0.03	7.34e-16	4.64e-16	5.99e-16	0.32	4.13e-16	2.60e-16	3.37e-16	0.32
0.050	2.61e-14	1.66e-14	2.14e-14	0.31	2.02e-14	1.28e-14	1.65e-14	0.32
0.070	8.91e-14	5.76e-14	7.34e-14	0.30	7.62e-14	4.91e-14	6.27e-14	0.31
0.100	2.17e-13	1.40e-13	1.79e-13	0.31	1.94e-13	1.25e-13	1.60e-13	0.31
0.200	6.76e-13	4.43e-13	5.60e-13	0.29	6.19e-13	4.06e-13	5.13e-13	0.29
0.500	1.95e-12	1.25e-12	1.60e-12	0.31	1.81e-12	1.17e-12	1.49e-12	0.30
1.0	3.98e-12	2.54e-12	3.26e-12	0.31	3.73e-12	2.38e-12	3.06e-12	0.31
2.0	7.85e-12	4.98e-12	6.42e-12	0.32	7.38e-12	4.68e-12	6.03e-12	0.32
5.0	1.84e-11	1.17e-11	1.51e-11	0.31	1.70e-11	1.08e-11	1.39e-11	0.32
Average				0.32				0.33

[a] Coefficient of variation

C.6 External Exposure Dose Coefficients for Individual Radionuclides

The external exposure dose coefficients for the individual radionuclides are listed in the following tables, in units of :Sv/h per Bq/g of the *radiation source* in each exposure geometry. These external exposure dose coefficients serve as input parameters to the analyses of doses from external exposure in the various exposure scenarios. The actual radionuclide concentrations in the different materials are calculated in the course of these analyses, taking into account radioactive decay, mixing with other materials, and partitioning during the melting and refining of scrap metals. The resulting mass-based doses reported in the Chapters 2 – 6 of the main report and in Appendices F – I are normalized to a specific activity of 1 Bq/g in the *cleared material*.

In the interest of a uniform presentation, all 115 radionuclides addressed by the radiological assessments are listed in the tables. Some coefficients are listed as zero. As discussed in the introductory paragraph of this appendix, the dose coefficients for 3 radionuclides—H-3, Ca-41 and Mn-53—are not assessed. Certain other nuclides emit only low-energy radiation which would be effectively absorbed by the shielding material in some exposure geometries, such as the cab of a truck which encloses the driver.

Table C.76 Effective dose equivalent coefficients for steel scenarios–part 1 (:Sv/h per Bq/g)

Nuclide	Scrap pile	Slag pile	Dust pile	Baghouse	Large metal object	Small metal object	Small object on body	Scrap truck	Slag truck
H-3	0.00e+00	0.00e+00	0.00e+00	0.00e+00	0.00e+00	0.00e+00	0.00e+00	0.00e+00	0.00e+00
C-14	1.28e-07	8.85e-08	6.41e-08	5.08e-08	1.10e-08	7.60e-10	6.01e-08	1.24e-09	4.41e-09
Na-22	1.72e-01	1.81e-01	1.62e-01	1.68e-02	7.14e-03	5.44e-04	5.94e-04	2.02e-02	1.26e-02
P-32	3.44e-04	2.43e-04	1.82e-04	1.91e-05	2.07e-05	1.52e-06	2.79e-05	3.67e-05	1.81e-05
S-35	1.31e-07	1.35e-07	7.21e-08	5.33e-08	1.14e-08	8.32e-10	6.08e-08	1.47e-09	8.86e-09
Cl-36	4.77e-05	3.70e-05	3.67e-05	5.39e-06	2.61e-06	1.92e-07	3.94e-08	4.00e-06	3.05e-06
K-40	1.37e-02	1.42e-02	1.28e-02	1.20e-03	4.91e-04	3.78e-05	4.06e-05	1.60e-03	9.25e-04
Ca-41	0.00e+00	0.00e+00	0.00e+00	0.00e+00	0.00e+00	0.00e+00	0.00e+00	0.00e+00	0.00e+00
Ca-45	8.32e-07	8.89e-07	4.04e-07	1.74e-07	5.12e-08	3.61e-09	7.03e-16	2.71e-08	5.87e-08
Sc-46	1.65e-01	1.71e-01	1.54e-01	1.57e-02	6.54e-03	5.00e-04	5.49e-04	1.95e-02	1.17e-02
Cr-51	1.80e-03	2.10e-03	1.74e-03	2.19e-04	1.04e-04	7.79e-06	8.51e-06	2.08e-04	1.65e-04
Mn-53	0.00e+00	0.00e+00	0.00e+00	0.00e+00	0.00e+00	0.00e+00	0.00e+00	0.00e+00	0.00e+00
Mn-54	6.62e-02	6.89e-02	6.18e-02	6.53e-03	2.79e-03	2.12e-04	2.32e-04	7.86e-03	4.85e-03
Fe-55	3.07e-12	5.36e-12	3.43e-12	7.63e-13	2.39e-13	1.72e-14	2.76e-14	1.65e-13	4.26e-13
Fe-59	9.96e-02	1.04e-01	9.31e-02	9.19e-03	3.77e-03	2.89e-04	3.19e-04	1.18e-02	6.95e-03
Co-56	3.00e-01	3.17e-01	2.84e-01	2.68e-02	1.09e-02	8.39e-04	9.18e-04	3.51e-02	2.08e-02
Co-57	2.29e-03	3.96e-03	2.55e-03	5.69e-04	1.76e-04	1.26e-05	2.04e-05	1.24e-04	3.14e-04
Co-58	7.54e-02	7.89e-02	7.05e-02	7.57e-03	3.27e-03	2.48e-04	2.70e-04	8.92e-03	5.61e-03
Co-60	2.13e-01	2.21e-01	1.99e-01	1.93e-02	7.89e-03	6.06e-04	6.68e-04	2.51e-02	1.47e-02
Ni-59	1.11e-06	1.20e-06	1.05e-06	1.22e-07	5.47e-08	4.13e-09	4.45e-09	1.30e-07	8.96e-08
Ni-63	1.48e-09	1.46e-09	9.95e-10	2.08e-09	1.16e-10	7.90e-12	0.00e+00	2.88e-14	1.90e-11
Zn-65	4.80e-02	4.99e-02	4.49e-02	4.50e-03	1.86e-03	1.43e-04	1.57e-04	5.68e-03	3.38e-03
As-73	1.49e-05	3.77e-05	1.88e-05	2.29e-05	1.12e-06	7.69e-08	2.56e-07	5.05e-09	1.89e-06
Se-75	1.68e-02	2.12e-02	1.66e-02	2.36e-03	1.04e-03	7.72e-05	9.12e-05	1.76e-03	1.68e-03
Sr-85	3.43e-02	3.68e-02	3.23e-02	3.74e-03	1.68e-03	1.27e-04	1.37e-04	3.98e-03	2.75e-03
Sr-89	2.71e-04	1.85e-04	1.35e-04	1.46e-05	1.43e-05	1.06e-06	2.40e-08	1.27e-04	1.51e-05
Sr-90	7.56e-04	5.09e-04	4.07e-04	3.97e-05	4.11e-05	3.07e-06	1.14e-11	8.08e-05	3.79e-05
Y-91	5.85e-04	5.25e-04	4.25e-04	4.30e-05	2.67e-05	2.01e-06	9.69e-07	6.73e-05	3.67e-05
Zr-93	1.72e-09	1.70e-09	1.16e-09	2.43e-09	1.35e-10	9.25e-12	0.00e+00	9.57e-14	2.27e-11
Zr-95	5.67e-02	5.92e-02	5.30e-02	5.72e-03	2.47e-03	1.88e-04	2.04e-04	6.73e-03	4.23e-03
Nb-93m	1.33e-07	3.51e-07	1.73e-07	1.00e-06	1.19e-08	8.18e-10	7.31e-09	3.54e-18	4.39e-12
Nb-94	1.22e-01	1.27e-01	1.14e-01	1.22e-02	5.22e-03	3.98e-04	4.33e-04	1.45e-02	9.02e-03
Nb-95	5.96e-02	6.22e-02	5.56e-02	5.97e-03	2.58e-03	1.96e-04	2.13e-04	7.07e-03	4.42e-03
Mo-93	7.15e-07	1.90e-06	9.38e-07	5.42e-06	6.43e-08	4.41e-09	3.97e-08	0.00e+00	6.60e-12
Tc-97	9.54e-07	2.54e-06	1.25e-06	6.82e-06	8.36e-08	5.73e-09	4.72e-08	0.00e+00	3.41e-11
Tc-97m	4.52e-06	9.56e-06	5.36e-06	7.99e-06	3.67e-07	2.57e-08	8.18e-08	7.13e-08	5.22e-07
Tc-99	1.68e-06	1.11e-06	9.07e-07	3.14e-07	1.47e-07	1.05e-08	4.07e-07	7.06e-08	7.57e-08
Ru-103	3.43e-02	3.69e-02	3.23e-02	3.75e-03	1.69e-03	1.27e-04	1.38e-04	3.98e-03	2.76e-03
Ru-106	1.70e-02	1.70e-02	1.52e-02	1.67e-03	7.91e-04	5.99e-05	5.70e-05	1.99e-03	1.24e-03
Ag-108m	1.17e-01	1.24e-01	1.10e-01	1.23e-02	5.45e-03	4.13e-04	4.47e-04	1.38e-02	9.11e-03
Ag-110m	2.17e-01	2.27e-01	2.03e-01	2.11e-02	8.96e-03	6.84e-04	7.46e-04	2.57e-02	1.58e-02
Cd-109	3.39e-05	7.43e-05	4.10e-05	4.26e-05	2.70e-06	1.89e-07	5.22e-07	3.67e-07	4.49e-06
Sn-113	1.61e-02	1.80e-02	1.53e-02	1.89e-03	8.67e-04	6.52e-05	7.05e-05	1.89e-03	1.39e-03
Sb-124	1.52e-01	1.59e-01	1.43e-01	1.41e-02	5.87e-03	4.50e-04	4.90e-04	1.78e-02	1.08e-02
Sb-125	2.90e-02	3.13e-02	2.74e-02	3.21e-03	1.42e-03	1.07e-04	1.16e-04	3.39e-03	2.34e-03
Te-123m	3.75e-03	5.74e-03	3.99e-03	7.35e-04	2.74e-04	2.00e-05	2.76e-05	2.97e-04	4.64e-04
Te-127m	3.32e-04	3.68e-04	3.10e-04	6.10e-05	1.81e-05	1.36e-06	1.47e-06	3.73e-05	2.73e-05
I-125	1.99e-05	5.26e-05	2.61e-05	8.99e-05	1.51e-06	1.03e-07	5.09e-07	3.72e-12	3.79e-07
I-129	1.61e-05	4.21e-05	2.09e-05	6.26e-05	1.21e-06	8.21e-08	3.73e-07	7.44e-10	5.75e-07
I-131	2.38e-02	2.66e-02	2.27e-02	2.74e-03	1.27e-03	9.58e-05	1.04e-04	2.79e-03	2.05e-03
Cs-134	1.19e-01	1.24e-01	1.11e-01	1.21e-02	5.25e-03	3.99e-04	4.33e-04	1.40e-02	8.94e-03
Cs-135	1.30e-06	1.45e-06	1.10e-06	3.78e-07	7.83e-08	5.54e-09	0.00e+00	4.46e-08	8.46e-08
Cs-137	4.22e-02	4.44e-02	3.95e-02	4.36e-03	1.91e-03	1.45e-04	1.57e-04	5.00e-03	3.22e-03
Ba-133	1.98e-02	2.30e-02	1.91e-02	2.56e-03	1.12e-03	8.39e-05	9.34e-05	2.28e-03	1.79e-03
Ce-139	3.93e-03	5.90e-03	4.15e-03	7.88e-04	2.84e-04	2.08e-05	2.82e-05	3.23e-04	4.75e-04
Ce-141	1.72e-03	2.77e-03	1.86e-03	3.75e-04	1.29e-04	9.37e-06	1.37e-05	1.22e-04	2.22e-04
Ce-144	4.05e-03	3.74e-03	3.34e-03	3.65e-04	1.80e-04	1.36e-05	1.01e-05	4.45e-04	2.58e-04
Pm-147	5.09e-07	5.88e-07	2.77e-07	1.26e-07	3.08e-08	2.17e-09	5.95e-10	1.22e-08	3.65e-08
Sm-151	5.53e-09	8.02e-09	3.45e-09	1.08e-08	3.13e-10	2.14e-11	4.33e-11	1.75e-13	8.55e-11

Table C.76 Effective dose equivalent coefficients for steel scenarios–part 1 (:Sv/h per Bq/g)

Nuclide	Scrap pile	Slag pile	Dust pile	Baghouse	Large metal object	Small metal object	Small object on body	Scrap truck	Slag truck
Eu-152	8.90e-02	9.40e-02	8.36e-02	8.74e-03	3.61e-03	2.76e-04	3.05e-04	1.04e-02	6.47e-03
Eu-154	8.75e-02	9.20e-02	8.21e-02	8.50e-03	3.50e-03	2.67e-04	2.96e-04	1.03e-02	6.30e-03
Eu-155	5.54e-04	1.13e-03	6.53e-04	2.56e-04	4.41e-05	3.11e-06	6.47e-06	1.21e-05	8.30e-05
Gd-153	7.13e-04	1.46e-03	8.43e-04	4.23e-04	5.67e-05	4.00e-06	8.54e-06	1.58e-05	1.03e-04
Tb-160	8.75e-02	9.20e-02	8.20e-02	8.57e-03	3.58e-03	2.74e-04	3.02e-04	1.03e-02	6.37e-03
Tm-170	7.39e-05	9.34e-05	5.54e-05	2.04e-05	5.11e-06	3.69e-07	3.05e-07	5.61e-06	6.72e-06
Tm-171	1.79e-06	4.43e-06	2.24e-06	2.40e-06	1.35e-07	9.31e-09	2.94e-08	1.51e-09	2.38e-07
Ta-182	1.00e-01	1.05e-01	9.40e-02	9.64e-03	3.88e-03	2.97e-04	3.31e-04	1.17e-02	7.11e-03
W-181	1.31e-04	3.23e-04	1.64e-04	1.57e-04	9.99e-06	6.89e-07	2.12e-06	2.12e-07	1.85e-05
W-185	5.78e-06	3.66e-06	2.91e-06	7.91e-07	4.11e-07	2.95e-08	8.09e-07	2.86e-07	2.68e-07
Os-185	4.88e-02	5.15e-02	4.57e-02	5.18e-03	2.20e-03	1.67e-04	1.82e-04	5.75e-03	3.72e-03
Ir-192	4.98e-02	5.61e-02	4.76e-02	5.82e-03	2.68e-03	2.02e-04	2.20e-04	5.77e-03	4.33e-03
Tl-204	4.01e-05	3.11e-05	2.32e-05	7.26e-06	2.70e-06	1.95e-07	3.66e-06	2.62e-06	2.24e-06
Pb-210	9.39e-05	5.91e-05	5.44e-05	1.43e-05	5.95e-06	4.37e-07	7.58e-08	8.46e-06	4.20e-06
Bi-207	1.17e-01	1.23e-01	1.10e-01	1.16e-02	4.87e-03	3.71e-04	4.08e-04	1.38e-02	8.58e-03
Po-210	7.65e-07	7.97e-07	7.14e-07	7.61e-08	3.26e-08	2.48e-09	2.70e-09	9.08e-08	5.64e-08
Ra-226	1.38e-01	1.46e-01	1.30e-01	1.30e-02	5.42e-03	4.15e-04	4.53e-04	1.61e-02	9.89e-03
Ra-228	6.72e-02	7.08e-02	6.30e-02	6.57e-03	2.77e-03	2.12e-04	2.32e-04	7.91e-03	4.91e-03
Ac-227	2.08e-02	2.44e-02	2.00e-02	2.71e-03	1.17e-03	8.75e-05	9.92e-05	2.30e-03	1.89e-03
Th-228	1.17e-01	1.26e-01	1.12e-01	1.04e-02	4.20e-03	3.23e-04	3.53e-04	1.34e-02	8.17e-03
Th-229	1.50e-02	1.74e-02	1.45e-02	1.97e-03	7.76e-04	5.82e-05	6.81e-05	1.63e-03	1.30e-03
Th-230	5.11e-06	8.60e-06	5.57e-06	2.16e-06	3.66e-07	2.65e-08	4.81e-08	3.29e-07	6.35e-07
Th-232	1.47e-06	3.01e-06	1.72e-06	1.23e-06	1.13e-07	8.01e-09	2.01e-08	4.81e-08	2.01e-07
Pa-231	1.66e-03	1.98e-03	1.61e-03	2.25e-04	9.79e-05	7.33e-06	8.28e-06	1.87e-04	1.56e-04
U-232	3.40e-06	5.74e-06	3.72e-06	1.84e-06	2.46e-07	1.78e-08	3.43e-08	2.17e-07	4.14e-07
U-233	6.86e-06	9.37e-06	6.97e-06	1.69e-06	4.42e-07	3.26e-08	4.54e-08	6.49e-07	7.22e-07
U-234	1.23e-06	2.40e-06	1.42e-06	1.21e-06	9.67e-08	6.86e-09	1.74e-08	4.55e-08	1.59e-07
U-235	5.31e-03	7.69e-03	5.52e-03	1.08e-03	3.72e-04	2.73e-05	3.68e-05	4.48e-04	6.16e-04
U-236	5.35e-07	1.12e-06	6.35e-07	8.78e-07	4.31e-08	3.04e-09	1.01e-08	1.40e-08	6.43e-08
U-238	2.07e-03	1.95e-03	1.74e-03	2.09e-04	9.49e-05	7.16e-06	5.82e-06	2.30e-04	1.37e-04
Np-237	1.05e-02	1.28e-02	1.03e-02	1.47e-03	6.21e-04	4.64e-05	5.42e-05	1.15e-03	1.01e-03
Pu-236	6.31e-07	1.14e-06	7.04e-07	1.16e-06	4.39e-08	3.13e-09	1.12e-08	3.50e-08	5.60e-08
Pu-238	2.93e-07	6.37e-07	3.53e-07	9.82e-07	2.34e-08	1.64e-09	8.33e-09	7.76e-09	2.26e-08
Pu-239	2.08e-06	2.76e-06	2.09e-06	7.54e-07	1.25e-07	9.26e-09	1.45e-08	2.02e-07	2.01e-07
Pu-240	2.72e-07	6.09e-07	3.32e-07	9.40e-07	2.22e-08	1.55e-09	7.95e-09	5.65e-09	2.14e-08
Pu-241	2.22e-08	4.09e-08	2.53e-08	6.91e-09	1.74e-09	1.24e-10	2.20e-10	9.39e-10	3.17e-09
Pu-242	2.44e-07	5.48e-07	2.98e-07	7.85e-07	2.02e-08	1.41e-09	6.83e-09	4.68e-09	2.11e-08
Pu-244	2.43e-02	2.56e-02	2.27e-02	2.48e-03	1.08e-03	8.20e-05	8.78e-05	2.85e-03	1.83e-03
Am-241	7.68e-05	1.88e-04	9.58e-05	9.55e-05	5.84e-06	4.02e-07	1.26e-06	1.56e-07	1.07e-05
Am-242m	4.33e-04	6.03e-04	4.40e-04	9.00e-05	2.48e-05	1.82e-06	2.73e-06	3.53e-05	4.41e-05
Am-243	5.82e-03	8.27e-03	5.98e-03	1.18e-03	3.84e-04	2.83e-05	3.92e-05	5.09e-04	6.46e-04
Cm-242	3.84e-07	7.24e-07	4.35e-07	1.13e-06	2.66e-08	1.89e-09	8.86e-09	2.07e-08	2.33e-08
Cm-243	4.18e-03	5.67e-03	4.24e-03	7.00e-04	2.73e-04	2.02e-05	2.58e-05	3.95e-04	4.50e-04
Cm-244	3.26e-07	6.09e-07	3.69e-07	9.57e-07	2.25e-08	1.60e-09	7.52e-09	1.82e-08	1.94e-08
Cm-245	1.67e-03	2.91e-03	1.86e-03	4.54e-04	1.28e-04	9.18e-06	1.52e-05	8.65e-05	2.28e-04
Cm-246	1.17e-07	3.09e-07	1.52e-07	7.49e-07	9.97e-09	6.83e-10	5.27e-09	9.96e-13	1.69e-09
Cm-247	1.99e-02	2.24e-02	1.90e-02	2.37e-03	1.07e-03	8.07e-05	8.84e-05	2.31e-03	1.73e-03
Cm-248	1.07e-07	2.84e-07	1.40e-07	6.93e-07	9.18e-09	6.29e-10	4.87e-09	8.06e-13	1.46e-09
Bk-249	6.62e-08	7.32e-08	4.80e-08	2.21e-08	3.81e-09	2.74e-10	1.63e-10	3.68e-09	4.78e-09
Cf-248	3.93e-07	8.89e-07	4.83e-07	1.12e-06	3.22e-08	2.24e-09	9.40e-09	5.56e-09	3.56e-08
Cf-249	1.95e-02	2.21e-02	1.87e-02	2.30e-03	1.07e-03	8.03e-05	8.73e-05	2.28e-03	1.71e-03
Cf-250	1.32e-07	3.51e-07	1.73e-07	8.43e-07	1.11e-08	7.62e-10	5.55e-09	3.36e-13	9.00e-10
Cf-251	2.99e-03	4.49e-03	3.15e-03	5.99e-04	2.11e-04	1.54e-05	2.17e-05	2.35e-04	3.58e-04
Cf-252	3.82e-07	8.06e-07	4.56e-07	9.30e-07	3.06e-08	2.15e-09	8.03e-09	1.11e-08	3.57e-08
Cf-254	1.41e+00	1.47e+00	1.32e+00	1.37e-01	5.76e-02	4.40e-03	4.82e-03	1.67e-01	1.02e-01
Es-254	7.32e-02	7.61e-02	6.83e-02	7.01e-03	2.91e-03	2.23e-04	2.45e-04	8.67e-03	5.22e-03

Table C.77 Effective dose equivalent coefficients for steel scenarios–part 2 (:Sv/h per Bq/g)

Nuclide	Atop dust truck	Dry bulk trailer	Dust in dump trailer		Truck with I-beams	Cement basement	House with steel studs	Auto engine block
			Driver's seat	Sleeper				
H-3	0.00e+00	0.00e+00	0.00e+00	0.00e+00	0.00e+00	0.00e+00	0.00e+00	0.00e+00
C-14	2.89e-08	1.88e-09	4.34e-09	7.85e-09	1.07e-08	4.00e-07	3.82e-08	1.09e-08
Na-22	1.04e-01	6.75e-03	1.48e-02	2.67e-02	1.33e-02	5.75e-01	9.95e-03	1.25e-02
P-32	1.14e-04	8.42e-06	1.84e-05	3.23e-05	3.10e-05	6.59e-04	3.65e-05	3.50e-05
S-35	3.33e-08	2.22e-09	5.08e-09	9.16e-09	1.03e-08	6.26e-07	4.18e-08	1.15e-08
Cl-36	2.28e-05	1.71e-06	3.75e-06	6.63e-06	3.63e-06	1.21e-04	5.78e-06	3.80e-06
K-40	8.24e-03	5.07e-04	1.11e-03	2.03e-03	9.89e-04	4.24e-02	6.70e-04	8.53e-04
Ca-41	0.00e+00	0.00e+00	0.00e+00	0.00e+00	0.00e+00	0.00e+00	0.00e+00	0.00e+00
Ca-45	2.16e-07	1.60e-08	3.53e-08	6.25e-08	5.36e-08	3.34e-06	1.92e-07	5.67e-08
Sc-46	1.00e-01	6.35e-03	1.39e-02	2.52e-02	1.25e-02	5.38e-01	9.01e-03	1.15e-02
Cr-51	1.10e-03	8.23e-05	1.79e-04	3.14e-04	1.60e-04	7.50e-03	1.61e-04	1.80e-04
Mn-53	0.00e+00	0.00e+00	0.00e+00	0.00e+00	0.00e+00	0.00e+00	0.00e+00	0.00e+00
Mn-54	4.02e-02	2.61e-03	5.71e-03	1.03e-02	5.14e-03	2.21e-01	3.87e-03	4.90e-03
Fe-55	2.06e-12	1.68e-13	3.62e-13	6.27e-13	2.81e-13	2.52e-11	6.71e-13	3.67e-13
Fe-59	6.04e-02	3.78e-03	8.26e-03	1.51e-02	7.37e-03	3.19e-01	5.17e-03	6.61e-03
Co-56	1.82e-01	1.13e-02	2.46e-02	4.52e-02	2.18e-02	9.51e-01	1.49e-02	1.90e-02
Co-57	1.53e-03	1.24e-04	2.67e-04	4.63e-04	2.08e-04	1.86e-02	4.95e-04	2.69e-04
Co-58	4.57e-02	3.00e-03	6.58e-03	1.18e-02	5.93e-03	2.56e-01	4.56e-03	5.74e-03
Co-60	1.29e-01	8.02e-03	1.75e-02	3.20e-02	1.56e-02	6.75e-01	1.08e-02	1.38e-02
Ni-59	6.74e-07	4.67e-08	1.03e-07	1.82e-07	9.28e-08	4.06e-06	7.86e-08	9.57e-08
Ni-63	1.58e-10	5.85e-12	1.70e-11	3.24e-11	4.24e-11	7.04e-09	2.30e-10	1.35e-11
Zn-65	2.92e-02	1.84e-03	4.02e-03	7.31e-03	3.59e-03	1.55e-01	2.56e-03	3.26e-03
As-73	8.97e-06	5.17e-07	1.25e-06	2.31e-06	1.00e-06	2.48e-04	6.08e-06	9.38e-07
Se-75	1.05e-02	7.98e-04	1.73e-03	3.02e-03	1.51e-03	8.07e-02	1.85e-03	1.76e-03
Sr-85	2.07e-02	1.43e-03	3.15e-03	5.60e-03	2.85e-03	1.24e-01	2.41e-03	2.94e-03
Sr-89	8.46e-05	6.24e-06	1.36e-05	2.39e-05	2.12e-05	5.31e-04	2.73e-05	2.11e-05
Sr-90	2.57e-04	1.84e-05	4.03e-05	7.11e-05	6.41e-05	1.33e-03	7.23e-05	6.15e-05
Y-91	2.73e-04	1.80e-05	3.94e-05	7.09e-05	4.50e-05	1.53e-03	4.46e-05	4.25e-05
Zr-93	1.86e-10	7.18e-12	2.05e-11	3.88e-11	4.98e-11	8.22e-09	2.69e-10	1.73e-11
Zr-95	3.44e-02	2.26e-03	4.96e-03	8.92e-03	4.48e-03	1.93e-01	3.45e-03	4.35e-03
Nb-93m	7.95e-11	5.18e-13	3.27e-12	5.86e-12	7.36e-11	2.48e-06	1.45e-10	2.56e-13
Nb-94	7.41e-02	4.84e-03	1.06e-02	1.91e-02	9.56e-03	4.11e-01	7.28e-03	9.18e-03
Nb-95	3.61e-02	2.37e-03	5.20e-03	9.35e-03	4.69e-03	2.02e-01	3.59e-03	4.53e-03
Mo-93	2.73e-10	1.04e-13	5.88e-12	8.93e-12	3.52e-10	1.34e-05	6.05e-10	7.38e-17
Tc-97	1.03e-09	8.60e-13	2.68e-11	4.38e-11	9.47e-10	1.75e-05	1.74e-09	3.32e-15
Tc-97m	2.36e-06	1.86e-07	4.04e-07	7.09e-07	3.09e-07	5.46e-05	1.07e-06	3.95e-07
Tc-99	5.03e-07	3.82e-08	8.38e-08	1.47e-07	1.64e-07	4.44e-06	4.84e-07	1.98e-07
Ru-103	2.07e-02	1.44e-03	3.16e-03	5.62e-03	2.86e-03	1.25e-01	2.43e-03	2.95e-03
Ru-106	9.81e-03	6.62e-04	1.45e-03	2.60e-03	1.38e-03	5.56e-02	1.14e-03	1.36e-03
Ag-108m	7.10e-02	4.80e-03	1.05e-02	1.88e-02	9.52e-03	4.13e-01	7.75e-03	9.57e-03
Ag-110m	1.32e-01	8.49e-03	1.86e-02	3.36e-02	1.67e-02	7.21e-01	1.24e-02	1.57e-02
Cd-109	2.00e-05	1.53e-06	3.34e-06	5.91e-06	2.52e-06	4.28e-04	9.73e-06	3.20e-06
Sn-113	9.77e-03	7.07e-04	1.55e-03	2.72e-03	1.39e-03	6.28e-02	1.29e-03	1.51e-03
Sb-124	9.19e-02	5.82e-03	1.27e-02	2.32e-02	1.13e-02	4.91e-01	8.06e-03	1.02e-02
Sb-125	1.76e-02	1.21e-03	2.67e-03	4.74e-03	2.41e-03	1.06e-01	2.06e-03	2.48e-03
Te-123m	2.44e-03	1.98e-04	4.26e-04	7.37e-04	3.48e-04	2.45e-02	6.19e-04	4.41e-04
Te-127m	1.94e-04	1.39e-05	3.05e-05	5.39e-05	2.83e-05	1.33e-03	2.87e-05	3.03e-05
I-125	2.90e-06	6.11e-08	2.38e-07	4.61e-07	4.97e-07	3.34e-04	2.30e-06	3.95e-08
I-129	3.75e-06	1.14e-07	3.68e-07	7.07e-07	5.40e-07	2.69e-04	2.87e-06	1.24e-07
I-131	1.45e-02	1.04e-03	2.28e-03	4.02e-03	2.05e-03	9.29e-02	1.91e-03	2.21e-03
Cs-134	7.19e-02	4.76e-03	1.04e-02	1.87e-02	9.42e-03	4.06e-01	7.35e-03	9.22e-03
Cs-135	5.83e-07	4.75e-08	9.04e-08	1.59e-07	8.40e-08	4.46e-06	2.84e-07	8.96e-08
Cs-137	2.56e-02	1.71e-03	3.75e-03	6.72e-03	3.39e-03	1.46e-01	2.69e-03	3.36e-03
Ba-133	1.21e-02	8.92e-04	1.95e-03	3.42e-03	1.74e-03	8.28e-02	1.77e-03	1.93e-03
Ce-139	2.54e-03	2.05e-04	4.42e-04	7.65e-04	3.65e-04	2.49e-02	6.19e-04	4.58e-04
Ce-141	1.13e-03	9.21e-05	1.98e-04	3.43e-04	1.59e-04	1.23e-02	3.17e-04	2.04e-04
Ce-144	2.12e-03	1.39e-04	3.03e-04	5.49e-04	3.14e-04	1.20e-02	3.00e-04	2.92e-04
Pm-147	1.48e-07	1.10e-08	2.44e-08	4.31e-08	3.16e-08	2.18e-06	1.17e-07	3.41e-08

Table C.77 Effective dose equivalent coefficients for steel scenarios–part 2 (:Sv/h per Bq/g)

Nuclide	Atop dust truck	Dry bulk trailer	Dust in dump trailer		Truck with I-beams	Cement basement	House with steel studs	Auto engine block
			Driver's seat	Sleeper				
Sm-151	4.00e-10	1.62e-11	4.50e-11	8.50e-11	1.04e-10	4.05e-08	5.64e-10	4.15e-11
Eu-152	5.41e-02	3.47e-03	7.58e-03	1.37e-02	6.77e-03	2.98e-01	5.12e-03	6.31e-03
Eu-154	5.32e-02	3.39e-03	7.41e-03	1.34e-02	6.62e-03	2.91e-01	4.95e-03	6.11e-03
Eu-155	3.75e-04	2.93e-05	6.38e-05	1.12e-04	4.79e-05	6.09e-03	1.67e-04	6.17e-05
Gd-153	4.71e-04	3.61e-05	7.92e-05	1.39e-04	6.02e-05	7.93e-03	2.09e-04	7.56e-05
Tb-160	5.32e-02	3.42e-03	7.48e-03	1.35e-02	6.70e-03	2.93e-01	5.05e-03	6.28e-03
Tm-170	3.23e-05	2.41e-06	5.30e-06	9.36e-06	6.40e-06	3.88e-04	1.55e-05	6.97e-06
Tm-171	1.11e-06	6.76e-08	1.59e-07	2.93e-07	1.25e-07	2.87e-05	7.29e-07	1.27e-07
Ta-182	6.09e-02	3.84e-03	8.38e-03	1.53e-02	7.47e-03	3.30e-01	5.49e-03	6.77e-03
W-181	8.42e-05	5.36e-06	1.24e-05	2.28e-05	9.57e-06	2.08e-03	5.45e-05	1.03e-05
W-185	1.69e-06	1.31e-07	2.86e-07	5.01e-07	4.92e-07	1.51e-05	1.21e-06	5.96e-07
Os-185	2.96e-02	1.97e-03	4.32e-03	7.75e-03	3.90e-03	1.70e-01	3.14e-03	3.85e-03
Ir-192	3.04e-02	2.19e-03	4.79e-03	8.45e-03	4.31e-03	1.97e-01	4.06e-03	4.66e-03
Tl-204	1.37e-05	1.03e-06	2.25e-06	3.97e-06	3.24e-06	1.47e-04	7.29e-06	4.07e-06
Pb-210	3.27e-05	2.42e-06	5.31e-06	9.33e-06	8.20e-06	2.20e-04	1.33e-05	8.33e-06
Bi-207	7.10e-02	4.59e-03	1.01e-02	1.82e-02	9.02e-03	3.94e-01	6.87e-03	8.52e-03
Po-210	4.64e-07	3.02e-08	6.63e-08	1.19e-07	5.98e-08	2.57e-06	4.53e-08	5.73e-08
Ra-226	8.34e-02	5.32e-03	1.16e-02	2.11e-02	1.03e-02	4.53e-01	7.60e-03	9.45e-03
Ra-228	4.08e-02	2.63e-03	5.76e-03	1.04e-02	5.16e-03	2.25e-01	3.91e-03	4.85e-03
Ac-227	1.27e-02	9.30e-04	2.03e-03	3.57e-03	1.81e-03	8.94e-02	1.96e-03	2.00e-03
Th-228	7.08e-02	4.41e-03	9.56e-03	1.76e-02	8.40e-03	3.75e-01	5.88e-03	7.25e-03
Th-229	9.17e-03	6.45e-04	1.41e-03	2.50e-03	1.25e-03	6.30e-02	1.33e-03	1.32e-03
Th-230	3.29e-06	2.53e-07	5.51e-07	9.66e-07	4.49e-07	4.26e-05	1.09e-06	5.48e-07
Th-232	9.48e-07	7.04e-08	1.55e-07	2.75e-07	1.20e-07	1.71e-05	4.38e-07	1.48e-07
Pa-231	1.02e-03	7.67e-05	1.67e-04	2.92e-04	1.49e-04	7.28e-03	1.59e-04	1.68e-04
U-232	2.15e-06	1.66e-07	3.63e-07	6.34e-07	2.93e-07	2.81e-05	6.78e-07	3.60e-07
U-233	4.28e-06	3.28e-07	7.12e-07	1.24e-06	6.12e-07	3.88e-05	9.02e-07	7.18e-07
U-234	7.58e-07	5.89e-08	1.29e-07	2.25e-07	9.97e-08	1.29e-05	2.98e-07	1.26e-07
U-235	3.40e-03	2.71e-04	5.85e-04	1.01e-03	4.90e-04	3.21e-02	7.83e-04	6.05e-04
U-236	3.02e-07	2.31e-08	5.07e-08	8.90e-08	3.91e-08	6.36e-06	1.29e-07	4.85e-08
U-238	1.12e-03	7.35e-05	1.61e-04	2.90e-04	1.64e-04	6.47e-03	1.60e-04	1.56e-04
Np-237	6.48e-03	4.85e-04	1.06e-03	1.85e-03	9.34e-04	4.82e-02	1.08e-03	1.06e-03
Pu-236	3.18e-07	2.29e-08	5.05e-08	8.94e-08	4.21e-08	6.21e-06	9.38e-08	4.73e-08
Pu-238	1.14e-07	8.45e-09	1.86e-08	3.28e-08	1.49e-08	3.89e-06	4.36e-08	1.76e-08
Pu-239	1.26e-06	9.32e-08	2.04e-07	3.58e-07	1.77e-07	1.15e-05	2.44e-07	1.99e-07
Pu-240	1.04e-07	7.69e-09	1.70e-08	3.01e-08	1.36e-08	3.78e-06	4.38e-08	1.60e-08
Pu-241	1.50e-08	1.20e-09	2.60e-09	4.52e-09	1.99e-09	2.03e-07	5.51e-09	2.59e-09
Pu-242	1.00e-07	7.56e-09	1.67e-08	2.93e-08	1.31e-08	3.35e-06	4.29e-08	1.59e-08
Pu-244	1.47e-02	9.73e-04	2.13e-03	3.83e-03	1.93e-03	8.35e-02	1.54e-03	1.89e-03
Am-241	4.88e-05	3.11e-06	7.21e-06	1.32e-05	5.54e-06	1.21e-03	3.15e-05	5.98e-06
Am-242m	2.72e-04	1.94e-05	4.22e-05	7.49e-05	3.53e-05	2.57e-03	6.29e-05	3.89e-05
Am-243	3.69e-03	2.84e-04	6.18e-04	1.08e-03	5.24e-04	3.54e-02	8.73e-04	6.23e-04
Cm-242	1.47e-07	1.03e-08	2.27e-08	4.03e-08	1.99e-08	4.17e-06	3.43e-08	2.10e-08
Cm-243	2.64e-03	2.05e-04	4.43e-04	7.72e-04	3.81e-04	2.29e-02	5.51e-04	4.51e-04
Cm-244	1.24e-07	8.75e-09	1.92e-08	3.41e-08	1.68e-08	3.49e-06	2.74e-08	1.79e-08
Cm-245	1.11e-03	8.92e-05	1.93e-04	3.35e-04	1.51e-04	1.39e-02	3.72e-04	1.94e-04
Cm-246	9.11e-09	4.18e-10	1.10e-09	2.07e-09	1.22e-09	2.12e-06	6.68e-09	6.68e-10
Cm-247	1.21e-02	8.75e-04	1.91e-03	3.38e-03	1.72e-03	7.91e-02	1.64e-03	1.86e-03
Cm-248	7.92e-09	3.59e-10	9.47e-10	1.79e-09	1.07e-09	1.95e-06	5.82e-09	5.70e-10
Bk-249	2.62e-08	1.86e-09	4.13e-09	7.30e-09	4.34e-09	3.03e-07	1.10e-08	4.40e-09
Cf-248	1.63e-07	1.27e-08	2.76e-08	4.85e-08	2.14e-08	5.32e-06	7.14e-08	2.67e-08
Cf-249	1.19e-02	8.66e-04	1.89e-03	3.33e-03	1.70e-03	7.77e-02	1.62e-03	1.85e-03
Cf-250	5.58e-09	2.04e-10	5.79e-10	1.10e-09	1.00e-09	2.37e-06	4.40e-09	3.05e-10
Cf-251	1.93e-03	1.53e-04	3.31e-04	5.75e-04	2.74e-04	1.94e-02	4.90e-04	3.38e-04
Cf-252	1.72e-07	1.35e-08	2.93e-08	5.12e-08	2.33e-08	4.63e-06	6.44e-08	2.90e-08
Cf-254	8.57e-01	5.50e-02	1.20e-01	2.18e-01	1.08e-01	4.66e+00	7.97e-02	1.01e-01
Es-254	4.45e-02	2.82e-03	6.18e-03	1.12e-02	5.54e-03	2.39e-01	4.03e-03	5.12e-03

Table C.78 Effective dose equivalent coefficients for steel scenarios–part 3 (:Sv/h per Bq/g)

Nuclide	Diesel truck		Hull plate		Steel ship			
	Driver's seat	Sleeper	Bunk	Lounge area	Berthing	Mess	Operations	Deck
H-3	0.00e+00	0.00e+00	0.00e+00	0.00e+00	0.00e+00	0.00e+00	0.00e+00	0.00e+00
C-14	1.65e-08	5.62e-09	2.16e-07	4.64e-08	4.29e-09	7.12e-09	3.66e-09	2.01e-07
Na-22	1.64e-02	6.89e-03	1.23e-01	2.48e-02	9.80e-02	1.20e-01	9.62e-02	2.04e-01
P-32	3.64e-05	1.54e-05	3.38e-04	7.42e-05	1.55e-04	1.98e-04	1.53e-04	4.86e-04
S-35	1.76e-08	5.87e-09	2.09e-07	5.00e-08	5.87e-09	9.59e-09	5.19e-09	2.26e-07
Cl-36	4.55e-06	1.74e-06	4.30e-05	9.71e-06	1.65e-05	2.16e-05	1.64e-05	6.36e-05
K-40	1.18e-03	5.12e-04	8.71e-03	1.68e-03	8.29e-03	1.00e-02	8.20e-03	1.52e-02
Ca-41	0.00e+00	0.00e+00	0.00e+00	0.00e+00	0.00e+00	0.00e+00	0.00e+00	0.00e+00
Ca-45	7.89e-08	2.69e-08	8.87e-07	2.09e-07	9.51e-08	1.42e-07	9.47e-08	1.26e-06
Sc-46	1.53e-02	6.51e-03	1.14e-01	2.27e-02	9.53e-02	1.16e-01	9.32e-02	1.91e-01
Cr-51	2.09e-04	8.24e-05	1.69e-03	3.72e-04	8.95e-04	1.14e-03	8.82e-04	2.55e-03
Mn-53	0.00e+00	0.00e+00	0.00e+00	0.00e+00	0.00e+00	0.00e+00	0.00e+00	0.00e+00
Mn-54	6.40e-03	2.69e-03	4.81e-02	9.71e-03	3.73e-02	4.55e-02	3.64e-02	7.89e-02
Fe-55	4.22e-13	1.54e-13	3.93e-12	9.26e-13	8.08e-13	1.18e-12	8.50e-13	5.58e-12
Fe-59	8.96e-03	3.84e-03	6.64e-02	1.30e-02	5.88e-02	7.11e-02	5.77e-02	1.13e-01
Co-56	2.60e-02	1.13e-02	1.93e-01	3.75e-02	1.83e-01	2.21e-01	1.82e-01	3.36e-01
Co-57	3.12e-04	1.14e-04	2.89e-03	6.80e-04	6.10e-04	8.80e-04	6.37e-04	4.12e-03
Co-58	7.42e-03	3.10e-03	5.60e-02	1.14e-02	4.20e-02	5.13e-02	4.09e-02	9.12e-02
Co-60	1.89e-02	8.13e-03	1.39e-01	2.72e-02	1.27e-01	1.53e-01	1.25e-01	2.40e-01
Ni-59	1.18e-07	4.82e-08	9.15e-07	1.93e-07	5.82e-07	7.24e-07	5.68e-07	1.44e-06
Ni-63	8.82e-11	2.26e-11	2.43e-09	5.22e-10	1.34e-13	2.76e-13	0.00e+00	2.97e-09
Zn-65	4.39e-03	1.88e-03	3.26e-02	6.44e-03	2.81e-02	3.40e-02	2.75e-02	5.52e-02
As-73	2.10e-06	6.34e-07	2.10e-05	4.95e-06	4.97e-08	1.03e-07	0.00e+00	3.17e-05
Se-75	2.02e-03	7.84e-04	1.68e-02	3.78e-03	7.65e-03	9.92e-03	7.59e-03	2.51e-02
Sr-85	3.63e-03	1.48e-03	2.81e-02	5.92e-03	1.79e-02	2.23e-02	1.75e-02	4.42e-02
Sr-89	2.52e-05	9.83e-06	2.35e-04	5.22e-05	1.10e-04	1.42e-04	1.09e-04	3.55e-04
Sr-90	7.46e-05	2.96e-05	6.81e-04	1.48e-04	3.66e-04	4.62e-04	3.60e-04	1.05e-03
Y-91	5.40e-05	2.21e-05	4.52e-04	9.50e-05	2.97e-04	3.68e-04	2.93e-04	7.22e-04
Zr-93	1.03e-10	2.65e-11	2.85e-09	6.10e-10	8.39e-13	1.63e-12	2.33e-13	3.47e-09
Zr-95	5.61e-03	2.34e-03	4.24e-02	8.65e-03	3.14e-02	3.85e-02	3.06e-02	6.88e-02
Nb-93m	1.94e-10	4.62e-11	2.76e-07	5.01e-08	0.00e+00	0.00e+00	0.00e+00	2.78e-07
Nb-94	1.19e-02	5.00e-03	8.99e-02	1.82e-02	6.83e-02	8.35e-02	6.66e-02	1.47e-01
Nb-95	5.86e-03	2.45e-03	4.42e-02	8.99e-03	3.32e-02	4.06e-02	3.23e-02	7.20e-02
Mo-93	9.48e-10	2.27e-10	1.49e-06	2.70e-07	0.00e+00	0.00e+00	0.00e+00	1.50e-06
Tc-97	2.35e-09	5.39e-10	1.90e-06	3.59e-07	0.00e+00	0.00e+00	0.00e+00	1.97e-06
Tc-97m	5.05e-07	1.76e-07	6.69e-06	1.51e-06	4.61e-07	7.39e-07	4.43e-07	8.80e-06
Tc-99	2.30e-07	8.63e-08	2.46e-06	5.81e-07	2.80e-07	4.07e-07	2.82e-07	2.81e-06
Ru-103	3.65e-03	1.48e-03	2.82e-02	5.96e-03	1.79e-02	2.22e-02	1.74e-02	4.43e-02
Ru-106	1.72e-03	7.08e-04	1.34e-02	2.78e-03	9.18e-03	1.13e-02	8.98e-03	2.14e-02
Ag-108m	1.20e-02	4.96e-03	9.22e-02	1.92e-02	6.33e-02	7.80e-02	6.17e-02	1.47e-01
Ag-110m	2.07e-02	8.72e-03	1.55e-01	3.12e-02	1.24e-01	1.51e-01	1.21e-01	2.57e-01
Cd-109	4.26e-06	1.45e-06	4.80e-05	1.13e-05	2.84e-06	4.79e-06	2.51e-06	6.55e-05
Sn-113	1.80e-03	7.19e-04	1.42e-02	3.08e-03	8.23e-03	1.04e-02	8.07e-03	2.19e-02
Sb-124	1.37e-02	5.88e-03	1.02e-01	2.03e-02	8.96e-02	1.09e-01	8.86e-02	1.75e-01
Sb-125	3.07e-03	1.25e-03	2.38e-02	5.01e-03	1.53e-02	1.90e-02	1.49e-02	3.74e-02
Te-123m	4.95e-04	1.85e-04	4.44e-03	1.03e-03	1.33e-03	1.84e-03	1.39e-03	6.38e-03
Te-127m	3.67e-05	1.46e-05	3.00e-04	6.52e-05	1.64e-04	2.06e-04	1.61e-04	4.58e-04
I-125	1.23e-06	2.86e-07	3.14e-05	7.07e-06	0.00e+00	0.00e+00	0.00e+00	3.84e-05
I-129	1.33e-06	3.31e-07	2.47e-05	5.62e-06	4.79e-09	7.95e-09	4.09e-09	3.15e-05
I-131	2.65e-03	1.06e-03	2.10e-02	4.53e-03	1.22e-02	1.54e-02	1.20e-02	3.23e-02
Cs-134	1.18e-02	4.92e-03	8.96e-02	1.84e-02	6.54e-02	8.02e-02	6.38e-02	1.45e-01
Cs-135	1.21e-07	4.17e-08	1.35e-06	3.17e-07	1.66e-07	2.44e-07	1.67e-07	1.92e-06
Cs-137	4.27e-03	1.77e-03	3.25e-02	6.70e-03	2.30e-02	2.83e-02	2.24e-02	5.22e-02
Ba-133	2.27e-03	8.99e-04	1.83e-02	4.01e-03	9.85e-03	1.25e-02	9.69e-03	2.78e-02
Ce-139	5.15e-04	1.93e-04	4.59e-03	1.07e-03	1.44e-03	1.98e-03	1.49e-03	6.61e-03
Ce-141	2.31e-04	8.54e-05	2.10e-03	4.92e-04	5.58e-04	7.85e-04	5.86e-04	3.01e-03
Ce-144	3.78e-04	1.57e-04	3.08e-03	6.38e-04	2.22e-03	2.74e-03	2.21e-03	5.03e-03
Pm-147	4.82e-08	1.63e-08	5.37e-07	1.27e-07	5.17e-08	7.82e-08	5.15e-08	7.61e-07

Table C.78 Effective dose equivalent coefficients for steel scenarios–part 3 (:Sv/h per Bq/g)

Nuclide	Diesel truck		Hull plate		Steel ship			
	Driver's seat	Sleeper	Bunk	Lounge area	Berthing	Mess	Operations	Deck
Sm-151	2.13e-10	5.57e-11	6.56e-09	1.42e-09	1.39e-12	2.80e-12	3.80e-14	8.01e-09
Eu-152	8.34e-03	3.53e-03	6.27e-02	1.26e-02	5.12e-02	6.23e-02	5.03e-02	1.05e-01
Eu-154	8.14e-03	3.45e-03	6.10e-02	1.22e-02	5.05e-02	6.14e-02	4.95e-02	1.02e-01
Eu-155	7.87e-05	2.74e-05	7.49e-04	1.78e-04	7.45e-05	1.18e-04	7.26e-05	1.06e-03
Gd-153	1.00e-04	3.45e-05	9.70e-04	2.30e-04	9.53e-05	1.50e-04	9.42e-05	1.38e-03
Tb-160	8.28e-03	3.49e-03	6.22e-02	1.25e-02	5.01e-02	6.10e-02	4.90e-02	1.03e-01
Tm-170	8.85e-06	3.20e-06	8.58e-05	1.99e-05	2.17e-05	2.92e-05	2.14e-05	1.25e-04
Tm-171	2.54e-07	7.82e-08	2.50e-06	5.93e-07	1.61e-08	3.17e-08	1.01e-11	3.72e-06
Ta-182	9.13e-03	3.90e-03	6.81e-02	1.34e-02	5.85e-02	7.09e-02	5.75e-02	1.15e-01
W-181	1.90e-05	5.93e-06	1.83e-04	4.35e-05	1.74e-06	3.23e-06	4.11e-07	2.71e-04
W-185	6.56e-07	2.51e-07	6.81e-06	1.59e-06	1.14e-06	1.60e-06	1.15e-06	7.98e-06
Os-185	4.92e-03	2.04e-03	3.74e-02	7.70e-03	2.66e-02	3.27e-02	2.59e-02	6.02e-02
Ir-192	5.56e-03	2.22e-03	4.41e-02	9.55e-03	2.54e-02	3.19e-02	2.49e-02	6.78e-02
Tl-204	4.52e-06	1.76e-06	4.49e-05	1.04e-05	1.01e-05	1.36e-05	1.00e-05	5.66e-05
Pb-210	1.02e-05	3.84e-06	9.83e-05	2.22e-05	3.75e-05	4.89e-05	3.73e-05	1.46e-04
Bi-207	1.12e-02	4.70e-03	8.41e-02	1.70e-02	6.64e-02	8.09e-02	6.50e-02	1.39e-01
Po-210	7.46e-08	3.12e-08	5.61e-07	1.14e-07	4.29e-07	5.24e-07	4.18e-07	9.17e-07
Ra-226	1.26e-02	5.35e-03	9.43e-02	1.88e-02	8.09e-02	9.84e-02	8.01e-02	1.60e-01
Ra-228	6.37e-03	2.69e-03	4.80e-02	9.66e-03	3.84e-02	4.68e-02	3.77e-02	7.96e-02
Ac-227	2.37e-03	9.36e-04	1.92e-02	4.21e-03	1.01e-02	1.29e-02	9.98e-03	2.92e-02
Th-228	9.91e-03	4.31e-03	7.39e-02	1.45e-02	7.27e-02	8.79e-02	7.30e-02	1.31e-01
Th-229	1.62e-03	6.51e-04	1.30e-02	2.79e-03	7.54e-03	9.45e-03	7.42e-03	2.02e-02
Th-230	6.74e-07	2.44e-07	6.14e-06	1.42e-06	1.48e-06	2.02e-06	1.48e-06	8.84e-06
Th-232	2.01e-07	6.90e-08	1.98e-06	4.61e-07	2.31e-07	3.35e-07	2.31e-07	2.81e-06
Pa-231	1.95e-04	7.65e-05	1.59e-03	3.53e-04	8.05e-04	1.03e-03	7.93e-04	2.39e-03
U-232	4.38e-07	1.60e-07	4.16e-06	9.54e-07	9.95e-07	1.36e-06	1.01e-06	5.93e-06
U-233	8.41e-07	3.21e-07	7.25e-06	1.64e-06	2.85e-06	3.73e-06	2.83e-06	1.07e-05
U-234	1.59e-07	5.60e-08	1.68e-06	3.86e-07	2.31e-07	3.40e-07	2.40e-07	2.33e-06
U-235	6.85e-04	2.57e-04	6.02e-03	1.39e-03	1.99e-03	2.71e-03	2.02e-03	8.71e-03
U-236	6.43e-08	2.23e-08	7.82e-07	1.74e-07	7.52e-08	1.14e-07	7.74e-08	1.05e-06
U-238	2.01e-04	8.29e-05	1.62e-03	3.38e-04	1.11e-03	1.36e-03	1.08e-03	2.61e-03
Np-237	1.24e-03	4.84e-04	1.01e-02	2.25e-03	4.97e-03	6.37e-03	4.90e-03	1.52e-02
Pu-236	6.27e-08	2.31e-08	8.18e-07	1.74e-07	1.65e-07	2.17e-07	1.64e-07	1.09e-06
Pu-238	2.40e-08	8.38e-09	4.64e-07	9.58e-08	3.90e-08	5.46e-08	3.92e-08	5.66e-07
Pu-239	2.40e-07	9.29e-08	2.10e-06	4.64e-07	8.94e-07	1.15e-06	8.82e-07	3.11e-06
Pu-240	2.25e-08	7.72e-09	4.41e-07	9.13e-08	2.91e-08	4.21e-08	2.94e-08	5.37e-07
Pu-241	3.09e-09	1.11e-09	2.89e-08	6.84e-09	4.81e-09	7.12e-09	4.92e-09	4.10e-08
Pu-242	2.17e-08	7.43e-09	3.95e-07	8.29e-08	2.49e-08	3.75e-08	2.54e-08	4.86e-07
Pu-244	2.41e-03	1.00e-03	1.84e-02	3.78e-03	1.34e-02	1.65e-02	1.31e-02	2.99e-02
Am-241	1.10e-05	3.43e-06	1.07e-04	2.54e-05	1.11e-06	1.94e-06	4.24e-07	1.58e-04
Am-242m	4.90e-05	1.90e-05	4.22e-04	9.35e-05	1.75e-04	2.24e-04	1.73e-04	6.40e-04
Am-243	7.31e-04	2.76e-04	6.29e-03	1.44e-03	2.25e-03	2.98e-03	2.23e-03	9.23e-03
Cm-242	2.84e-08	1.07e-08	5.27e-07	1.07e-07	9.61e-08	1.22e-07	9.48e-08	6.60e-07
Cm-243	5.21e-04	1.99e-04	4.44e-03	1.01e-03	1.73e-03	2.28e-03	1.72e-03	6.53e-03
Cm-244	2.38e-08	9.01e-09	4.46e-07	9.05e-08	8.43e-08	1.07e-07	8.32e-08	5.57e-07
Cm-245	2.28e-04	8.27e-05	2.11e-03	4.96e-04	4.22e-04	6.08e-04	4.33e-04	3.00e-03
Cm-246	2.79e-09	7.48e-10	2.23e-07	4.31e-08	0.00e+00	0.00e+00	0.00e+00	2.42e-07
Cm-247	2.23e-03	8.90e-04	1.77e-02	3.82e-03	1.01e-02	1.27e-02	9.92e-03	2.71e-02
Cm-248	2.46e-09	6.56e-10	2.05e-07	3.97e-08	0.00e+00	0.00e+00	0.00e+00	2.23e-07
Bk-249	6.40e-09	2.27e-09	6.76e-08	1.53e-08	1.61e-08	2.08e-08	1.58e-08	9.74e-08
Cf-248	3.54e-08	1.22e-08	6.15e-07	1.34e-07	3.37e-08	5.32e-08	3.34e-08	7.72e-07
Cf-249	2.20e-03	8.77e-04	1.75e-02	3.81e-03	9.91e-03	1.25e-02	9.73e-03	2.68e-02
Cf-250	2.31e-09	5.65e-10	2.47e-07	4.90e-08	0.00e+00	0.00e+00	0.00e+00	2.69e-07
Cf-251	3.88e-04	1.45e-04	3.44e-03	7.95e-04	1.06e-03	1.44e-03	1.07e-03	4.97e-03
Cf-252	3.66e-08	1.29e-08	5.71e-07	1.25e-07	5.57e-08	8.15e-08	5.70e-08	7.29e-07
Cf-254	1.34e-01	5.66e-02	1.00e+00	2.00e-01	8.06e-01	9.81e-01	7.87e-01	1.66e+00
Es-254	6.82e-03	2.90e-03	5.09e-02	1.01e-02	4.22e-02	5.13e-02	4.13e-02	8.51e-02

Table C.79 Effective dose coefficients for external exposure in steel scenarios—part 1 (:Sv/h per Bq/g)

Nuclide	Scrap pile	Slag pile	Dust pile	Baghouse	Large metal object	Small metal object	Small object on body	Scrap truck	Slag truck
H-3	0.00e+00	0.00e+00	0.00e+00	0.00e+00	0.00e+00	0.00e+00	0.00e+00	0.00e+00	0.00e+00
C-14	1.28e-07	8.85e-08	6.41e-08	5.08e-08	1.10e-08	7.60e-10	2.40e-08	1.24e-09	4.41e-09
Na-22	1.72e-01	1.81e-01	1.62e-01	1.68e-02	7.14e-03	5.44e-04	2.74e-04	2.02e-02	1.26e-02
P-32	3.44e-04	2.43e-04	1.82e-04	1.91e-05	2.07e-05	1.52e-06	1.12e-05	3.67e-05	1.81e-05
S-35	1.31e-07	1.35e-07	7.21e-08	5.33e-08	1.14e-08	8.32e-10	2.42e-08	1.47e-09	8.86e-09
Cl-36	4.77e-05	3.70e-05	3.67e-05	5.39e-06	2.61e-06	1.92e-07	1.79e-08	4.00e-06	3.05e-06
K-40	1.37e-02	1.42e-02	1.28e-02	1.20e-03	4.91e-04	3.78e-05	1.91e-05	1.60e-03	9.25e-04
Ca-41	0.00e+00	0.00e+00	0.00e+00	0.00e+00	0.00e+00	0.00e+00	0.00e+00	0.00e+00	0.00e+00
Ca-45	8.32e-07	8.89e-07	4.04e-07	1.74e-07	5.12e-08	3.61e-09	2.75e-16	2.71e-08	5.87e-08
Sc-46	1.65e-01	1.71e-01	1.54e-01	1.57e-02	6.54e-03	5.00e-04	2.53e-04	1.95e-02	1.17e-02
Cr-51	1.80e-03	2.10e-03	1.74e-03	2.19e-04	1.04e-04	7.79e-06	3.82e-06	2.08e-04	1.65e-04
Mn-53	0.00e+00	0.00e+00	0.00e+00	0.00e+00	0.00e+00	0.00e+00	0.00e+00	0.00e+00	0.00e+00
Mn-54	6.62e-02	6.89e-02	6.18e-02	6.53e-03	2.79e-03	2.12e-04	1.06e-04	7.86e-03	4.85e-03
Fe-55	3.07e-12	5.36e-12	3.43e-12	7.63e-13	2.39e-13	1.72e-14	1.41e-14	1.65e-13	4.26e-13
Fe-59	9.96e-02	1.04e-01	9.31e-02	9.19e-03	3.77e-03	2.89e-04	1.48e-04	1.18e-02	6.95e-03
Co-56	3.00e-01	3.17e-01	2.84e-01	2.68e-02	1.09e-02	8.39e-04	4.30e-04	3.51e-02	2.08e-02
Co-57	2.29e-03	3.96e-03	2.55e-03	5.69e-04	1.76e-04	1.26e-05	1.04e-05	1.24e-04	3.14e-04
Co-58	7.54e-02	7.89e-02	7.05e-02	7.57e-03	3.27e-03	2.48e-04	1.24e-04	8.92e-03	5.61e-03
Co-60	2.13e-01	2.21e-01	1.99e-01	1.93e-02	7.89e-03	6.06e-04	3.10e-04	2.51e-02	1.47e-02
Ni-59	1.11e-06	1.20e-06	1.05e-06	1.22e-07	5.47e-08	4.13e-09	2.02e-09	1.30e-07	8.96e-08
Ni-63	1.48e-09	1.46e-09	9.95e-10	2.08e-09	1.16e-10	7.90e-12	0.00e+00	2.88e-14	1.90e-11
Zn-65	4.80e-02	4.99e-02	4.49e-02	4.50e-03	1.86e-03	1.43e-04	7.25e-05	5.68e-03	3.38e-03
As-73	1.49e-05	3.77e-05	1.88e-05	2.29e-05	1.12e-06	7.69e-08	1.32e-07	5.05e-09	1.89e-06
Se-75	1.68e-02	2.12e-02	1.66e-02	2.36e-03	1.04e-03	7.72e-05	4.21e-05	1.76e-03	1.68e-03
Sr-85	3.43e-02	3.68e-02	3.23e-02	3.74e-03	1.68e-03	1.27e-04	6.21e-05	3.98e-03	2.75e-03
Sr-89	2.71e-04	1.85e-04	1.35e-04	1.46e-05	1.43e-05	1.06e-06	1.10e-08	1.27e-04	1.51e-05
Sr-90	7.56e-04	5.09e-04	4.07e-04	3.97e-05	4.11e-05	3.07e-06	5.08e-12	8.08e-05	3.79e-05
Y-91	5.85e-04	5.25e-04	4.25e-04	4.30e-05	2.67e-05	2.01e-06	4.50e-07	6.73e-05	3.67e-05
Zr-93	1.72e-09	1.70e-09	1.16e-09	2.43e-09	1.35e-10	9.25e-12	0.00e+00	9.57e-14	2.27e-11
Zr-95	5.67e-02	5.92e-02	5.30e-02	5.72e-03	2.47e-03	1.88e-04	9.33e-05	6.73e-03	4.23e-03
Nb-93m	1.33e-07	3.51e-07	1.73e-07	1.00e-06	1.19e-08	8.18e-10	2.84e-09	3.54e-18	4.39e-12
Nb-94	1.22e-01	1.27e-01	1.14e-01	1.22e-02	5.22e-03	3.98e-04	1.98e-04	1.45e-02	9.02e-03
Nb-95	5.96e-02	6.22e-02	5.56e-02	5.97e-03	2.58e-03	1.96e-04	9.74e-05	7.07e-03	4.42e-03
Mo-93	7.15e-07	1.90e-06	9.38e-07	5.42e-06	6.43e-08	4.41e-09	1.54e-08	0.00e+00	6.60e-12
Tc-97	9.54e-07	2.54e-06	1.25e-06	6.82e-06	8.36e-08	5.73e-09	1.83e-08	0.00e+00	3.41e-11
Tc-97m	4.52e-06	9.56e-06	5.36e-06	7.99e-06	3.67e-07	2.57e-08	3.73e-08	7.13e-08	5.22e-07
Tc-99	1.68e-06	1.11e-06	9.07e-07	3.14e-07	1.47e-07	1.05e-08	1.64e-07	7.06e-08	7.57e-08
Ru-103	3.43e-02	3.69e-02	3.23e-02	3.75e-03	1.69e-03	1.27e-04	6.25e-05	3.98e-03	2.76e-03
Ru-106	1.70e-02	1.70e-02	1.52e-02	1.67e-03	7.91e-04	5.99e-05	2.60e-05	1.99e-03	1.24e-03
Ag-108m	1.17e-01	1.24e-01	1.10e-01	1.23e-02	5.45e-03	4.13e-04	2.03e-04	1.38e-02	9.11e-03
Ag-110m	2.17e-01	2.27e-01	2.03e-01	2.11e-02	8.96e-03	6.84e-04	3.43e-04	2.57e-02	1.58e-02
Cd-109	3.39e-05	7.43e-05	4.10e-05	4.26e-05	2.70e-06	1.89e-07	2.54e-07	3.67e-07	4.49e-06
Sn-113	1.61e-02	1.80e-02	1.53e-02	1.89e-03	8.67e-04	6.52e-05	3.18e-05	1.89e-03	1.39e-03
Sb-124	1.52e-01	1.59e-01	1.43e-01	1.41e-02	5.87e-03	4.50e-04	2.28e-04	1.78e-02	1.08e-02
Sb-125	2.90e-02	3.13e-02	2.74e-02	3.21e-03	1.42e-03	1.07e-04	5.29e-05	3.39e-03	2.34e-03
Te-123m	3.75e-03	5.74e-03	3.99e-03	7.35e-04	2.74e-04	2.00e-05	1.34e-05	2.97e-04	4.64e-04
Te-127m	3.32e-04	3.68e-04	3.10e-04	6.10e-05	1.81e-05	1.36e-06	6.57e-07	3.73e-05	2.73e-05
I-125	1.99e-05	5.26e-05	2.61e-05	8.99e-05	1.51e-06	1.03e-07	1.99e-07	3.72e-12	3.79e-07
I-129	1.61e-05	4.21e-05	2.09e-05	6.26e-05	1.21e-06	8.21e-08	1.51e-07	7.44e-10	5.75e-07
I-131	2.38e-02	2.66e-02	2.27e-02	2.74e-03	1.27e-03	9.58e-05	4.68e-05	2.79e-03	2.05e-03
Cs-134	1.19e-01	1.24e-01	1.11e-01	1.21e-02	5.25e-03	3.99e-04	1.98e-04	1.40e-02	8.94e-03
Cs-135	1.30e-06	1.45e-06	1.10e-06	3.78e-07	7.83e-08	5.54e-09	0.00e+00	4.46e-08	8.46e-08
Cs-137	4.22e-02	4.44e-02	3.95e-02	4.36e-03	1.91e-03	1.45e-04	7.15e-05	5.00e-03	3.22e-03
Ba-133	1.98e-02	2.30e-02	1.91e-02	2.56e-03	1.12e-03	8.39e-05	4.22e-05	2.28e-03	1.79e-03
Ce-139	3.93e-03	5.90e-03	4.15e-03	7.88e-04	2.84e-04	2.08e-05	1.35e-05	3.23e-04	4.75e-04
Ce-141	1.72e-03	2.77e-03	1.86e-03	3.75e-04	1.29e-04	9.37e-06	6.75e-06	1.22e-04	2.22e-04
Ce-144	4.05e-03	3.74e-03	3.34e-03	3.65e-04	1.80e-04	1.36e-05	4.86e-06	4.45e-04	2.58e-04
Pm-147	5.09e-07	5.88e-07	2.77e-07	1.26e-07	3.08e-08	2.17e-09	3.05e-10	1.22e-08	3.65e-08
Sm-151	5.53e-09	8.02e-09	3.45e-09	1.08e-08	3.13e-10	2.14e-11	1.67e-11	1.75e-13	8.55e-11

Table C.79 Effective dose coefficients for external exposure in steel scenarios—part 1 (:Sv/h per Bq/g)

Nuclide	Scrap pile	Slag pile	Dust pile	Baghouse	Large metal object	Small metal object	Small object on body	Scrap truck	Slag truck
Eu-152	8.90e-02	9.40e-02	8.36e-02	8.74e-03	3.61e-03	2.76e-04	1.41e-04	1.04e-02	6.47e-03
Eu-154	8.75e-02	9.20e-02	8.21e-02	8.50e-03	3.50e-03	2.67e-04	1.37e-04	1.03e-02	6.30e-03
Eu-155	5.54e-04	1.13e-03	6.53e-04	2.56e-04	4.41e-05	3.11e-06	3.41e-06	1.21e-05	8.30e-05
Gd-153	7.13e-04	1.46e-03	8.43e-04	4.23e-04	5.67e-05	4.00e-06	4.44e-06	1.58e-05	1.03e-04
Tb-160	8.75e-02	9.20e-02	8.20e-02	8.57e-03	3.58e-03	2.74e-04	1.39e-04	1.03e-02	6.37e-03
Tm-170	7.39e-05	9.34e-05	5.54e-05	2.04e-05	5.11e-06	3.69e-07	1.61e-07	5.61e-06	6.72e-06
Tm-171	1.79e-06	4.43e-06	2.24e-06	2.40e-06	1.35e-07	9.31e-09	1.53e-08	1.51e-09	2.38e-07
Ta-182	1.00e-01	1.05e-01	9.40e-02	9.64e-03	3.88e-03	2.97e-04	1.54e-04	1.17e-02	7.11e-03
W-181	1.31e-04	3.23e-04	1.64e-04	1.57e-04	9.99e-06	6.89e-07	1.11e-06	2.12e-07	1.85e-05
W-185	5.78e-06	3.66e-06	2.91e-06	7.91e-07	4.11e-07	2.95e-08	3.27e-07	2.86e-07	2.68e-07
Os-185	4.88e-02	5.15e-02	4.57e-02	5.18e-03	2.20e-03	1.67e-04	8.34e-05	5.75e-03	3.72e-03
Ir-192	4.98e-02	5.61e-02	4.76e-02	5.82e-03	2.68e-03	2.02e-04	9.93e-05	5.77e-03	4.33e-03
Tl-204	4.01e-05	3.11e-05	2.32e-05	7.26e-06	2.70e-06	1.95e-07	1.50e-06	2.62e-06	2.24e-06
Pb-210	9.39e-05	5.91e-05	5.44e-05	1.43e-05	5.95e-06	4.37e-07	3.67e-08	8.46e-06	4.20e-06
Bi-207	1.17e-01	1.23e-01	1.10e-01	1.16e-02	4.87e-03	3.71e-04	1.88e-04	1.38e-02	8.58e-03
Po-210	7.65e-07	7.97e-07	7.14e-07	7.61e-08	3.26e-08	2.48e-09	1.24e-09	9.08e-08	5.64e-08
Ra-226	1.38e-01	1.46e-01	1.30e-01	1.30e-02	5.42e-03	4.15e-04	2.10e-04	1.61e-02	9.89e-03
Ra-228	6.72e-02	7.08e-02	6.30e-02	6.57e-03	2.77e-03	2.12e-04	1.07e-04	7.91e-03	4.91e-03
Ac-227	2.08e-02	2.44e-02	2.00e-02	2.71e-03	1.17e-03	8.75e-05	4.54e-05	2.30e-03	1.89e-03
Th-228	1.17e-01	1.26e-01	1.12e-01	1.04e-02	4.20e-03	3.23e-04	1.67e-04	1.34e-02	8.17e-03
Th-229	1.50e-02	1.74e-02	1.45e-02	1.97e-03	7.76e-04	5.82e-05	3.17e-05	1.63e-03	1.30e-03
Th-230	5.11e-06	8.60e-06	5.57e-06	2.16e-06	3.66e-07	2.65e-08	2.38e-08	3.29e-07	6.35e-07
Th-232	1.47e-06	3.01e-06	1.72e-06	1.23e-06	1.13e-07	8.01e-09	1.00e-08	4.81e-08	2.01e-07
Pa-231	1.66e-03	1.98e-03	1.61e-03	2.25e-04	9.79e-05	7.33e-06	3.74e-06	1.87e-04	1.56e-04
U-232	3.40e-06	5.74e-06	3.72e-06	1.84e-06	2.46e-07	1.78e-08	1.66e-08	2.17e-07	4.14e-07
U-233	6.86e-06	9.37e-06	6.97e-06	1.69e-06	4.42e-07	3.26e-08	2.12e-08	6.49e-07	7.22e-07
U-234	1.23e-06	2.40e-06	1.42e-06	1.21e-06	9.67e-08	6.86e-09	8.32e-09	4.55e-08	1.59e-07
U-235	5.31e-03	7.69e-03	5.52e-03	1.08e-03	3.72e-04	2.73e-05	1.73e-05	4.48e-04	6.16e-04
U-236	5.35e-07	1.12e-06	6.35e-07	8.78e-07	4.31e-08	3.04e-09	4.60e-09	1.40e-08	6.43e-08
U-238	2.07e-03	1.95e-03	1.74e-03	2.09e-04	9.49e-05	7.16e-06	2.75e-06	2.30e-04	1.37e-04
Np-237	1.05e-02	1.28e-02	1.03e-02	1.47e-03	6.21e-04	4.64e-05	2.50e-05	1.15e-03	1.01e-03
Pu-236	6.31e-07	1.14e-06	7.04e-07	1.16e-06	4.39e-08	3.13e-09	4.80e-09	3.50e-08	5.60e-08
Pu-238	2.93e-07	6.37e-07	3.53e-07	9.82e-07	2.34e-08	1.64e-09	3.45e-09	7.76e-09	2.26e-08
Pu-239	2.08e-06	2.76e-06	2.09e-06	7.54e-07	1.25e-07	9.26e-09	6.64e-09	2.02e-07	2.01e-07
Pu-240	2.72e-07	6.09e-07	3.32e-07	9.40e-07	2.22e-08	1.55e-09	3.31e-09	5.65e-09	2.14e-08
Pu-241	2.22e-08	4.09e-08	2.53e-08	6.91e-09	1.74e-09	1.24e-10	1.14e-10	9.39e-10	3.17e-09
Pu-242	2.44e-07	5.48e-07	2.98e-07	7.85e-07	2.02e-08	1.41e-09	2.88e-09	4.68e-09	2.11e-08
Pu-244	2.43e-02	2.56e-02	2.27e-02	2.48e-03	1.08e-03	8.20e-05	4.02e-05	2.85e-03	1.83e-03
Am-241	7.68e-05	1.88e-04	9.58e-05	9.55e-05	5.84e-06	4.02e-07	6.58e-07	1.56e-07	1.07e-05
Am-242m	4.33e-04	6.03e-04	4.40e-04	9.00e-05	2.48e-05	1.82e-06	1.37e-06	3.53e-05	4.41e-05
Am-243	5.82e-03	8.27e-03	5.98e-03	1.18e-03	3.84e-04	2.83e-05	1.89e-05	5.09e-04	6.46e-04
Cm-242	3.84e-07	7.24e-07	4.35e-07	1.13e-06	2.66e-08	1.89e-09	3.59e-09	2.07e-08	2.33e-08
Cm-243	4.18e-03	5.67e-03	4.24e-03	7.00e-04	2.73e-04	2.02e-05	1.22e-05	3.95e-04	4.50e-04
Cm-244	3.26e-07	6.09e-07	3.69e-07	9.57e-07	2.25e-08	1.60e-09	3.03e-09	1.82e-08	1.94e-08
Cm-245	1.67e-03	2.91e-03	1.86e-03	4.54e-04	1.28e-04	9.18e-06	7.79e-06	8.65e-05	2.28e-04
Cm-246	1.17e-07	3.09e-07	1.52e-07	7.49e-07	9.97e-09	6.83e-10	2.07e-09	9.96e-13	1.69e-09
Cm-247	1.99e-02	2.24e-02	1.90e-02	2.37e-03	1.07e-03	8.07e-05	4.01e-05	2.31e-03	1.73e-03
Cm-248	1.07e-07	2.84e-07	1.40e-07	6.93e-07	9.18e-09	6.29e-10	1.91e-09	8.06e-13	1.46e-09
Bk-249	6.62e-08	7.32e-08	4.80e-08	2.21e-08	3.81e-09	2.74e-10	7.44e-11	3.68e-09	4.78e-09
Cf-248	3.93e-07	8.89e-07	4.83e-07	1.12e-06	3.22e-08	2.24e-09	4.02e-09	5.56e-09	3.56e-08
Cf-249	1.95e-02	2.21e-02	1.87e-02	2.30e-03	1.07e-03	8.03e-05	3.94e-05	2.28e-03	1.71e-03
Cf-250	1.32e-07	3.51e-07	1.73e-07	8.43e-07	1.11e-08	7.62e-10	2.16e-09	3.36e-13	9.00e-10
Cf-251	2.99e-03	4.49e-03	3.15e-03	5.99e-04	2.11e-04	1.54e-05	1.05e-05	2.35e-04	3.58e-04
Cf-252	3.82e-07	8.06e-07	4.56e-07	9.30e-07	3.06e-08	2.15e-09	3.43e-09	1.11e-08	3.57e-08
Cf-254	1.41e+00	1.47e+00	1.32e+00	1.37e-01	5.76e-02	4.40e-03	2.21e-03	1.67e-01	1.02e-01
Es-254	7.32e-02	7.61e-02	6.83e-02	7.01e-03	2.91e-03	2.23e-04	1.13e-04	8.67e-03	5.22e-03

Table C.80 Effective dose coefficients for external exposure in steel scenarios—part 2 (:Sv/h per Bq/g)

Nuclide	Atop dust truck	Dry bulk trailer	Dust in dump trailer		Truck with I-beams	Cement basement	House with steel studs	Auto engine block
			Driver's seat	Sleeper				
H-3	0.00e+00	0.00e+00	0.00e+00	0.00e+00	0.00e+00	0.00e+00	0.00e+00	0.00e+00
C-14	2.89e-08	1.88e-09	4.34e-09	7.85e-09	1.07e-08	4.00e-07	3.82e-08	1.09e-08
Na-22	1.04e-01	6.75e-03	1.48e-02	2.67e-02	1.33e-02	5.75e-01	9.95e-03	1.25e-02
P-32	1.14e-04	8.42e-06	1.84e-05	3.23e-05	3.10e-05	6.59e-04	3.65e-05	3.50e-05
S-35	3.33e-08	2.22e-09	5.08e-09	9.16e-09	1.03e-08	6.26e-07	4.18e-08	1.15e-08
Cl-36	2.28e-05	1.71e-06	3.75e-06	6.63e-06	3.63e-06	1.21e-04	5.78e-06	3.80e-06
K-40	8.24e-03	5.07e-04	1.11e-03	2.03e-03	9.89e-04	4.24e-02	6.70e-04	8.53e-04
Ca-41	0.00e+00	0.00e+00	0.00e+00	0.00e+00	0.00e+00	0.00e+00	0.00e+00	0.00e+00
Ca-45	2.16e-07	1.60e-08	3.53e-08	6.25e-08	5.36e-08	3.34e-06	1.92e-07	5.67e-08
Sc-46	1.00e-01	6.35e-03	1.39e-02	2.52e-02	1.25e-02	5.38e-01	9.01e-03	1.15e-02
Cr-51	1.10e-03	8.23e-05	1.79e-04	3.14e-04	1.60e-04	7.50e-03	1.61e-04	1.80e-04
Mn-53	0.00e+00	0.00e+00	0.00e+00	0.00e+00	0.00e+00	0.00e+00	0.00e+00	0.00e+00
Mn-54	4.02e-02	2.61e-03	5.71e-03	1.03e-02	5.14e-03	2.21e-01	3.87e-03	4.90e-03
Fe-55	2.06e-12	1.68e-13	3.62e-13	6.27e-13	2.81e-13	2.52e-11	6.71e-13	3.67e-13
Fe-59	6.04e-02	3.78e-03	8.26e-03	1.51e-02	7.37e-03	3.19e-01	5.17e-03	6.61e-03
Co-56	1.82e-01	1.13e-02	2.46e-02	4.52e-02	2.18e-02	9.51e-01	1.49e-02	1.90e-02
Co-57	1.53e-03	1.24e-04	2.67e-04	4.63e-04	2.08e-04	1.86e-02	4.95e-04	2.69e-04
Co-58	4.57e-02	3.00e-03	6.58e-03	1.18e-02	5.93e-03	2.56e-01	4.56e-03	5.74e-03
Co-60	1.29e-01	8.02e-03	1.75e-02	3.20e-02	1.56e-02	6.75e-01	1.08e-02	1.38e-02
Ni-59	6.74e-07	4.67e-08	1.03e-07	1.82e-07	9.28e-08	4.06e-06	7.86e-08	9.57e-08
Ni-63	1.58e-10	5.85e-12	1.70e-11	3.24e-11	4.24e-11	7.04e-09	2.30e-10	1.35e-11
Zn-65	2.92e-02	1.84e-03	4.02e-03	7.31e-03	3.59e-03	1.55e-01	2.56e-03	3.26e-03
As-73	8.97e-06	5.17e-07	1.25e-06	2.31e-06	1.00e-06	2.48e-04	6.08e-06	9.38e-07
Se-75	1.05e-02	7.98e-04	1.73e-03	3.02e-03	1.51e-03	8.07e-02	1.85e-03	1.76e-03
Sr-85	2.07e-02	1.43e-03	3.15e-03	5.60e-03	2.85e-03	1.24e-01	2.41e-03	2.94e-03
Sr-89	8.46e-05	6.24e-06	1.36e-05	2.39e-05	2.12e-05	5.31e-04	2.73e-05	2.11e-05
Sr-90	2.57e-04	1.84e-05	4.03e-05	7.11e-05	6.41e-05	1.33e-03	7.23e-05	6.15e-05
Y-91	2.73e-04	1.80e-05	3.94e-05	7.09e-05	4.50e-05	1.53e-03	4.46e-05	4.25e-05
Zr-93	1.86e-10	7.18e-12	2.05e-11	3.88e-11	4.98e-11	8.22e-09	2.69e-10	1.73e-11
Zr-95	3.44e-02	2.26e-03	4.96e-03	8.92e-03	4.48e-03	1.93e-01	3.45e-03	4.35e-03
Nb-93m	7.95e-11	5.18e-13	3.27e-12	5.86e-12	7.36e-11	2.48e-06	1.45e-10	2.56e-13
Nb-94	7.41e-02	4.84e-03	1.06e-02	1.91e-02	9.56e-03	4.11e-01	7.28e-03	9.18e-03
Nb-95	3.61e-02	2.37e-03	5.20e-03	9.35e-03	4.69e-03	2.02e-01	3.59e-03	4.53e-03
Mo-93	2.73e-10	1.04e-13	5.88e-12	8.93e-12	3.52e-10	1.34e-05	6.05e-10	7.38e-17
Tc-97	1.03e-09	8.60e-13	2.68e-11	4.38e-11	9.47e-10	1.75e-05	1.74e-09	3.32e-15
Tc-97m	2.36e-06	1.86e-07	4.04e-07	7.09e-07	3.09e-07	5.46e-05	1.07e-06	3.95e-07
Tc-99	5.03e-07	3.82e-08	8.38e-08	1.47e-07	1.64e-07	4.44e-06	4.84e-07	1.98e-07
Ru-103	2.07e-02	1.44e-03	3.16e-03	5.62e-03	2.86e-03	1.25e-01	2.43e-03	2.95e-03
Ru-106	9.81e-03	6.62e-04	1.45e-03	2.60e-03	1.38e-03	5.56e-02	1.14e-03	1.36e-03
Ag-108m	7.10e-02	4.80e-03	1.05e-02	1.88e-02	9.52e-03	4.13e-01	7.75e-03	9.57e-03
Ag-110m	1.32e-01	8.49e-03	1.86e-02	3.36e-02	1.67e-02	7.21e-01	1.24e-02	1.57e-02
Cd-109	2.00e-05	1.53e-06	3.34e-06	5.91e-06	2.52e-06	4.28e-04	9.73e-06	3.20e-06
Sn-113	9.77e-03	7.07e-04	1.55e-03	2.72e-03	1.39e-03	6.28e-02	1.29e-03	1.51e-03
Sb-124	9.19e-02	5.82e-03	1.27e-02	2.32e-02	1.13e-02	4.91e-01	8.06e-03	1.02e-02
Sb-125	1.76e-02	1.21e-03	2.67e-03	4.74e-03	2.41e-03	1.06e-01	2.06e-03	2.48e-03
Te-123m	2.44e-03	1.98e-04	4.26e-04	7.37e-04	3.48e-04	2.45e-02	6.19e-04	4.41e-04
Te-127m	1.94e-04	1.39e-05	3.05e-05	5.39e-05	2.83e-05	1.33e-03	2.87e-05	3.03e-05
I-125	2.90e-06	6.11e-08	2.38e-07	4.61e-07	4.97e-07	3.34e-04	2.30e-06	3.95e-08
I-129	3.75e-06	1.14e-07	3.68e-07	7.07e-07	5.40e-07	2.69e-04	2.87e-06	1.24e-07
I-131	1.45e-02	1.04e-03	2.28e-03	4.02e-03	2.05e-03	9.29e-02	1.91e-03	2.21e-03
Cs-134	7.19e-02	4.76e-03	1.04e-02	1.87e-02	9.42e-03	4.06e-01	7.35e-03	9.22e-03
Cs-135	5.83e-07	4.75e-08	9.04e-08	1.59e-07	8.40e-08	4.46e-06	2.84e-07	8.96e-08
Cs-137	2.56e-02	1.71e-03	3.75e-03	6.72e-03	3.39e-03	1.46e-01	2.69e-03	3.36e-03
Ba-133	1.21e-02	8.92e-04	1.95e-03	3.42e-03	1.74e-03	8.28e-02	1.77e-03	1.93e-03
Ce-139	2.54e-03	2.05e-04	4.42e-04	7.65e-04	3.65e-04	2.49e-02	6.19e-04	4.58e-04
Ce-141	1.13e-03	9.21e-05	1.98e-04	3.43e-04	1.59e-04	1.23e-02	3.17e-04	2.04e-04
Ce-144	2.12e-03	1.39e-04	3.03e-04	5.49e-04	3.14e-04	1.20e-02	3.00e-04	2.92e-04
Pm-147	1.48e-07	1.10e-08	2.44e-08	4.31e-08	3.16e-08	2.18e-06	1.17e-07	3.41e-08

Table C.80 Effective dose coefficients for external exposure in steel scenarios—part 2 (:Sv/h per Bq/g)

Nuclide	Atop dust truck	Dry bulk trailer	Dust in dump trailer		Truck with I-beams	Cement basement	House with steel studs	Auto engine block
			Driver's seat	Sleeper				
Sm-151	4.00e-10	1.62e-11	4.50e-11	8.50e-11	1.04e-10	4.05e-08	5.64e-10	4.15e-11
Eu-152	5.41e-02	3.47e-03	7.58e-03	1.37e-02	6.77e-03	2.98e-01	5.12e-03	6.31e-03
Eu-154	5.32e-02	3.39e-03	7.41e-03	1.34e-02	6.62e-03	2.91e-01	4.95e-03	6.11e-03
Eu-155	3.75e-04	2.93e-05	6.38e-05	1.12e-04	4.79e-05	6.09e-03	1.67e-04	6.17e-05
Gd-153	4.71e-04	3.61e-05	7.92e-05	1.39e-04	6.02e-05	7.93e-03	2.09e-04	7.56e-05
Tb-160	5.32e-02	3.42e-03	7.48e-03	1.35e-02	6.70e-03	2.93e-01	5.05e-03	6.28e-03
Tm-170	3.23e-05	2.41e-06	5.30e-06	9.36e-06	6.40e-06	3.88e-04	1.55e-05	6.97e-06
Tm-171	1.11e-06	6.76e-08	1.59e-07	2.93e-07	1.25e-07	2.87e-05	7.29e-07	1.27e-07
Ta-182	6.09e-02	3.84e-03	8.38e-03	1.53e-02	7.47e-03	3.30e-01	5.49e-03	6.77e-03
W-181	8.42e-05	5.36e-06	1.24e-05	2.28e-05	9.57e-06	2.08e-03	5.45e-05	1.03e-05
W-185	1.69e-06	1.31e-07	2.86e-07	5.01e-07	4.92e-07	1.51e-05	1.21e-06	5.96e-07
Os-185	2.96e-02	1.97e-03	4.32e-03	7.75e-03	3.90e-03	1.70e-01	3.14e-03	3.85e-03
Ir-192	3.04e-02	2.19e-03	4.79e-03	8.45e-03	4.31e-03	1.97e-01	4.06e-03	4.66e-03
Tl-204	1.37e-05	1.03e-06	2.25e-06	3.97e-06	3.24e-06	1.47e-04	7.29e-06	4.07e-06
Pb-210	3.27e-05	2.42e-06	5.31e-06	9.33e-06	8.20e-06	2.20e-04	1.33e-05	8.33e-06
Bi-207	7.10e-02	4.59e-03	1.01e-02	1.82e-02	9.02e-03	3.94e-01	6.87e-03	8.52e-03
Po-210	4.64e-07	3.02e-08	6.63e-08	1.19e-07	5.98e-08	2.57e-06	4.53e-08	5.73e-08
Ra-226	8.34e-02	5.32e-03	1.16e-02	2.11e-02	1.03e-02	4.53e-01	7.60e-03	9.45e-03
Ra-228	4.08e-02	2.63e-03	5.76e-03	1.04e-02	5.16e-03	2.25e-01	3.91e-03	4.85e-03
Ac-227	1.27e-02	9.30e-04	2.03e-03	3.57e-03	1.81e-03	8.94e-02	1.96e-03	2.00e-03
Th-228	7.08e-02	4.41e-03	9.56e-03	1.76e-02	8.40e-03	3.75e-01	5.88e-03	7.25e-03
Th-229	9.17e-03	6.45e-04	1.41e-03	2.50e-03	1.25e-03	6.30e-02	1.33e-03	1.32e-03
Th-230	3.29e-06	2.53e-07	5.51e-07	9.66e-07	4.49e-07	4.26e-05	1.09e-06	5.48e-07
Th-232	9.48e-07	7.04e-08	1.55e-07	2.75e-07	1.20e-07	1.71e-05	4.38e-07	1.48e-07
Pa-231	1.02e-03	7.67e-05	1.67e-04	2.92e-04	1.49e-04	7.28e-03	1.59e-04	1.68e-04
U-232	2.15e-06	1.66e-07	3.63e-07	6.34e-07	2.93e-07	2.81e-05	6.78e-07	3.60e-07
U-233	4.28e-06	3.28e-07	7.12e-07	1.24e-06	6.12e-07	3.88e-05	9.02e-07	7.18e-07
U-234	7.58e-07	5.89e-08	1.29e-07	2.25e-07	9.97e-08	1.29e-05	2.98e-07	1.26e-07
U-235	3.40e-03	2.71e-04	5.85e-04	1.01e-03	4.90e-04	3.21e-02	7.83e-04	6.05e-04
U-236	3.02e-07	2.31e-08	5.07e-08	8.90e-08	3.91e-08	6.36e-06	1.29e-07	4.85e-08
U-238	1.12e-03	7.35e-05	1.61e-04	2.90e-04	1.64e-04	6.47e-03	1.60e-04	1.56e-04
Np-237	6.48e-03	4.85e-04	1.06e-03	1.85e-03	9.34e-04	4.82e-02	1.08e-03	1.06e-03
Pu-236	3.18e-07	2.29e-08	5.05e-08	8.94e-08	4.21e-08	6.21e-06	9.38e-08	4.73e-08
Pu-238	1.14e-07	8.45e-09	1.86e-08	3.28e-08	1.49e-08	3.89e-06	4.36e-08	1.76e-08
Pu-239	1.26e-06	9.32e-08	2.04e-07	3.58e-07	1.77e-07	1.15e-05	2.44e-07	1.99e-07
Pu-240	1.04e-07	7.69e-09	1.70e-08	3.01e-08	1.36e-08	3.78e-06	4.38e-08	1.60e-08
Pu-241	1.50e-08	1.20e-09	2.60e-09	4.52e-09	1.99e-09	2.03e-07	5.51e-09	2.59e-09
Pu-242	1.00e-07	7.56e-09	1.67e-08	2.93e-08	1.31e-08	3.35e-06	4.29e-08	1.59e-08
Pu-244	1.47e-02	9.73e-04	2.13e-03	3.83e-03	1.93e-03	8.35e-02	1.54e-03	1.89e-03
Am-241	4.88e-05	3.11e-06	7.21e-06	1.32e-05	5.54e-06	1.21e-03	3.15e-05	5.98e-06
Am-242m	2.72e-04	1.94e-05	4.22e-05	7.49e-05	3.53e-05	2.57e-03	6.29e-05	3.89e-05
Am-243	3.69e-03	2.84e-04	6.18e-04	1.08e-03	5.24e-04	3.54e-02	8.73e-04	6.23e-04
Cm-242	1.47e-07	1.03e-08	2.27e-08	4.03e-08	1.99e-08	4.17e-06	3.43e-08	2.10e-08
Cm-243	2.64e-03	2.05e-04	4.43e-04	7.72e-04	3.81e-04	2.29e-02	5.51e-04	4.51e-04
Cm-244	1.24e-07	8.75e-09	1.92e-08	3.41e-08	1.68e-08	3.49e-06	2.74e-08	1.79e-08
Cm-245	1.11e-03	8.92e-05	1.93e-04	3.35e-04	1.51e-04	1.39e-02	3.72e-04	1.94e-04
Cm-246	9.11e-09	4.18e-10	1.10e-09	2.07e-09	1.22e-09	2.12e-06	6.68e-09	6.68e-10
Cm-247	1.21e-02	8.75e-04	1.91e-03	3.38e-03	1.72e-03	7.91e-02	1.64e-03	1.86e-03
Cm-248	7.92e-09	3.59e-10	9.47e-10	1.79e-09	1.07e-09	1.95e-06	5.82e-09	5.70e-10
Bk-249	2.62e-08	1.86e-09	4.13e-09	7.30e-09	4.34e-09	3.03e-07	1.10e-08	4.40e-09
Cf-248	1.63e-07	1.27e-08	2.76e-08	4.85e-08	2.14e-08	5.32e-06	7.14e-08	2.67e-08
Cf-249	1.19e-02	8.66e-04	1.89e-03	3.33e-03	1.70e-03	7.77e-02	1.62e-03	1.85e-03
Cf-250	5.58e-09	2.04e-10	5.79e-10	1.10e-09	1.00e-09	2.37e-06	4.40e-09	3.05e-10
Cf-251	1.93e-03	1.53e-04	3.31e-04	5.75e-04	2.74e-04	1.94e-02	4.90e-04	3.38e-04
Cf-252	1.72e-07	1.35e-08	2.93e-08	5.12e-08	2.33e-08	4.63e-06	6.44e-08	2.90e-08
Cf-254	8.57e-01	5.50e-02	1.20e-01	2.18e-01	1.08e-01	4.66e+00	7.97e-02	1.01e-01
Es-254	4.45e-02	2.82e-03	6.18e-03	1.12e-02	5.54e-03	2.39e-01	4.03e-03	5.12e-03

Table C.81 Effective dose coefficients for external exposure in steel scenarios—part 3 (:Sv/h per Bq/g)

Nuclide	Diesel truck		Hull plate		Steel ship			
	Driver's seat	Sleeper	Bunk	Lounge area	Berthing	Mess	Operations	Deck
H-3	0.00e+00	0.00e+00	0.00e+00	0.00e+00	0.00e+00	0.00e+00	0.00e+00	0.00e+00
C-14	1.65e-08	5.62e-09	2.16e-07	4.64e-08	4.14e-09	6.87e-09	3.54e-09	1.82e-07
Na-22	1.64e-02	6.89e-03	1.23e-01	2.48e-02	9.57e-02	1.16e-01	9.42e-02	2.00e-01
P-32	3.64e-05	1.54e-05	3.38e-04	7.42e-05	1.50e-04	1.92e-04	1.48e-04	4.72e-04
S-35	1.76e-08	5.87e-09	2.09e-07	5.00e-08	5.68e-09	9.28e-09	5.02e-09	2.06e-07
Cl-36	4.55e-06	1.74e-06	4.30e-05	9.71e-06	1.60e-05	2.10e-05	1.59e-05	6.16e-05
K-40	1.18e-03	5.12e-04	8.71e-03	1.68e-03	8.11e-03	9.77e-03	8.06e-03	1.50e-02
Ca-41	0.00e+00	0.00e+00	0.00e+00	0.00e+00	0.00e+00	0.00e+00	0.00e+00	0.00e+00
Ca-45	7.89e-08	2.69e-08	8.87e-07	2.09e-07	9.24e-08	1.38e-07	9.19e-08	1.19e-06
Sc-46	1.53e-02	6.51e-03	1.14e-01	2.27e-02	9.31e-02	1.13e-01	9.17e-02	1.88e-01
Cr-51	2.09e-04	8.24e-05	1.69e-03	3.72e-04	8.67e-04	1.11e-03	8.53e-04	2.48e-03
Mn-53	0.00e+00	0.00e+00	0.00e+00	0.00e+00	0.00e+00	0.00e+00	0.00e+00	0.00e+00
Mn-54	6.40e-03	2.69e-03	4.81e-02	9.71e-03	3.64e-02	4.43e-02	3.57e-02	7.73e-02
Fe-55	4.22e-13	1.54e-13	3.93e-12	9.26e-13	7.88e-13	1.15e-12	8.27e-13	5.45e-12
Fe-59	8.96e-03	3.84e-03	6.64e-02	1.30e-02	5.75e-02	6.94e-02	5.68e-02	1.11e-01
Co-56	2.60e-02	1.13e-02	1.93e-01	3.75e-02	1.79e-01	2.16e-01	1.79e-01	3.30e-01
Co-57	3.12e-04	1.14e-04	2.89e-03	6.80e-04	5.94e-04	8.58e-04	6.19e-04	4.02e-03
Co-58	7.42e-03	3.10e-03	5.60e-02	1.14e-02	4.09e-02	5.00e-02	4.01e-02	8.93e-02
Co-60	1.89e-02	8.13e-03	1.39e-01	2.72e-02	1.24e-01	1.49e-01	1.23e-01	2.36e-01
Ni-59	1.18e-07	4.82e-08	9.15e-07	1.93e-07	5.66e-07	7.03e-07	5.52e-07	1.40e-06
Ni-63	8.82e-11	2.26e-11	2.43e-09	5.22e-10	1.24e-13	2.56e-13	0.00e+00	2.26e-09
Zn-65	4.39e-03	1.88e-03	3.26e-02	6.44e-03	2.74e-02	3.32e-02	2.71e-02	5.42e-02
As-73	2.10e-06	6.34e-07	2.10e-05	4.95e-06	4.58e-08	9.53e-08	0.00e+00	2.91e-05
Se-75	2.02e-03	7.84e-04	1.68e-02	3.78e-03	7.41e-03	9.65e-03	7.35e-03	2.43e-02
Sr-85	3.63e-03	1.48e-03	2.81e-02	5.92e-03	1.74e-02	2.16e-02	1.70e-02	4.31e-02
Sr-89	2.52e-05	9.83e-06	2.35e-04	5.22e-05	1.07e-04	1.38e-04	1.06e-04	3.44e-04
Sr-90	7.46e-05	2.96e-05	6.81e-04	1.48e-04	3.56e-04	4.50e-04	3.51e-04	1.02e-03
Y-91	5.40e-05	2.21e-05	4.52e-04	9.50e-05	2.90e-04	3.59e-04	2.87e-04	7.05e-04
Zr-93	1.03e-10	2.65e-11	2.85e-09	6.10e-10	7.92e-13	1.54e-12	2.23e-13	2.64e-09
Zr-95	5.61e-03	2.34e-03	4.24e-02	8.65e-03	3.06e-02	3.74e-02	3.00e-02	6.74e-02
Nb-93m	1.94e-10	4.62e-11	2.76e-07	5.01e-08	0.00e+00	0.00e+00	0.00e+00	1.84e-07
Nb-94	1.19e-02	5.00e-03	8.99e-02	1.82e-02	6.67e-02	8.13e-02	6.53e-02	1.44e-01
Nb-95	5.86e-03	2.45e-03	4.42e-02	8.99e-03	3.24e-02	3.95e-02	3.17e-02	7.05e-02
Mo-93	9.48e-10	2.27e-10	1.49e-06	2.70e-07	0.00e+00	0.00e+00	0.00e+00	9.93e-07
Tc-97	2.35e-09	5.39e-10	1.90e-06	3.59e-07	0.00e+00	0.00e+00	0.00e+00	1.30e-06
Tc-97m	5.05e-07	1.76e-07	6.69e-06	1.51e-06	4.47e-07	7.17e-07	4.29e-07	7.92e-06
Tc-99	2.30e-07	8.63e-08	2.46e-06	5.81e-07	2.72e-07	3.96e-07	2.74e-07	2.68e-06
Ru-103	3.65e-03	1.48e-03	2.82e-02	5.96e-03	1.74e-02	2.16e-02	1.69e-02	4.33e-02
Ru-106	1.72e-03	7.08e-04	1.34e-02	2.78e-03	8.94e-03	1.10e-02	8.76e-03	2.09e-02
Ag-108m	1.20e-02	4.96e-03	9.22e-02	1.92e-02	6.16e-02	7.59e-02	6.02e-02	1.44e-01
Ag-110m	2.07e-02	8.72e-03	1.55e-01	3.12e-02	1.21e-01	1.47e-01	1.19e-01	2.52e-01
Cd-109	4.26e-06	1.45e-06	4.80e-05	1.13e-05	2.75e-06	4.63e-06	2.42e-06	6.06e-05
Sn-113	1.80e-03	7.19e-04	1.42e-02	3.08e-03	7.98e-03	1.01e-02	7.82e-03	2.13e-02
Sb-124	1.37e-02	5.88e-03	1.02e-01	2.03e-02	8.76e-02	1.06e-01	8.68e-02	1.71e-01
Sb-125	3.07e-03	1.25e-03	2.38e-02	5.01e-03	1.49e-02	1.84e-02	1.45e-02	3.65e-02
Te-123m	4.95e-04	1.85e-04	4.44e-03	1.03e-03	1.29e-03	1.80e-03	1.35e-03	6.21e-03
Te-127m	3.67e-05	1.46e-05	3.00e-04	6.52e-05	1.59e-04	2.00e-04	1.56e-04	4.43e-04
I-125	1.23e-06	2.86e-07	3.14e-05	7.07e-06	0.00e+00	0.00e+00	0.00e+00	2.83e-05
I-129	1.33e-06	3.31e-07	2.47e-05	5.62e-06	4.63e-09	7.68e-09	3.96e-09	2.44e-05
I-131	2.65e-03	1.06e-03	2.10e-02	4.53e-03	1.19e-02	1.49e-02	1.16e-02	3.14e-02
Cs-134	1.18e-02	4.92e-03	8.96e-02	1.84e-02	6.37e-02	7.80e-02	6.24e-02	1.42e-01
Cs-135	1.21e-07	4.17e-08	1.35e-06	3.17e-07	1.61e-07	2.38e-07	1.62e-07	1.82e-06
Cs-137	4.27e-03	1.77e-03	3.25e-02	6.70e-03	2.24e-02	2.75e-02	2.19e-02	5.11e-02
Ba-133	2.27e-03	8.99e-04	1.83e-02	4.01e-03	9.54e-03	1.21e-02	9.38e-03	2.70e-02
Ce-139	5.15e-04	1.93e-04	4.59e-03	1.07e-03	1.40e-03	1.93e-03	1.44e-03	6.42e-03
Ce-141	2.31e-04	8.54e-05	2.10e-03	4.92e-04	5.43e-04	7.66e-04	5.70e-04	2.93e-03
Ce-144	3.78e-04	1.57e-04	3.08e-03	6.38e-04	2.17e-03	2.67e-03	2.16e-03	4.93e-03
Pm-147	4.82e-08	1.63e-08	5.37e-07	1.27e-07	5.03e-08	7.60e-08	5.00e-08	7.18e-07

Table C.81 Effective dose coefficients for external exposure in steel scenarios—part 3 (:Sv/h per Bq/g)

Nuclide	Diesel truck		Hull plate		Steel ship			
	Driver's seat	Sleeper	Bunk	Lounge area	Berthing	Mess	Operations	Deck
Sm-151	2.13e-10	5.57e-11	6.56e-09	1.42e-09	1.29e-12	2.61e-12	3.63e-14	6.02e-09
Eu-152	8.34e-03	3.53e-03	6.27e-02	1.26e-02	5.00e-02	6.08e-02	4.94e-02	1.03e-01
Eu-154	8.14e-03	3.45e-03	6.10e-02	1.22e-02	4.93e-02	5.98e-02	4.87e-02	1.00e-01
Eu-155	7.87e-05	2.74e-05	7.49e-04	1.78e-04	7.24e-05	1.15e-04	7.04e-05	1.03e-03
Gd-153	1.00e-04	3.45e-05	9.70e-04	2.30e-04	9.27e-05	1.46e-04	9.14e-05	1.32e-03
Tb-160	8.28e-03	3.49e-03	6.22e-02	1.25e-02	4.89e-02	5.94e-02	4.82e-02	1.01e-01
Tm-170	8.85e-06	3.20e-06	8.58e-05	1.99e-05	2.11e-05	2.84e-05	2.07e-05	1.21e-04
Tm-171	2.54e-07	7.82e-08	2.50e-06	5.93e-07	1.51e-08	2.99e-08	9.70e-12	3.45e-06
Ta-182	9.13e-03	3.90e-03	6.81e-02	1.34e-02	5.72e-02	6.92e-02	5.66e-02	1.13e-01
W-181	1.90e-05	5.93e-06	1.83e-04	4.35e-05	1.65e-06	3.06e-06	3.99e-07	2.53e-04
W-185	6.56e-07	2.51e-07	6.81e-06	1.59e-06	1.11e-06	1.56e-06	1.12e-06	7.68e-06
Os-185	4.92e-03	2.04e-03	3.74e-02	7.70e-03	2.59e-02	3.18e-02	2.53e-02	5.89e-02
Ir-192	5.56e-03	2.22e-03	4.41e-02	9.55e-03	2.46e-02	3.10e-02	2.41e-02	6.60e-02
Tl-204	4.52e-06	1.76e-06	4.49e-05	1.04e-05	9.81e-06	1.33e-05	9.71e-06	5.46e-05
Pb-210	1.02e-05	3.84e-06	9.83e-05	2.22e-05	3.64e-05	4.76e-05	3.61e-05	1.41e-04
Bi-207	1.12e-02	4.70e-03	8.41e-02	1.70e-02	6.48e-02	7.89e-02	6.38e-02	1.36e-01
Po-210	7.46e-08	3.12e-08	5.61e-07	1.14e-07	4.18e-07	5.10e-07	4.10e-07	8.99e-07
Ra-226	1.26e-02	5.35e-03	9.43e-02	1.88e-02	7.91e-02	9.60e-02	7.85e-02	1.57e-01
Ra-228	6.37e-03	2.69e-03	4.80e-02	9.66e-03	3.75e-02	4.56e-02	3.70e-02	7.80e-02
Ac-227	2.37e-03	9.36e-04	1.92e-02	4.21e-03	9.84e-03	1.25e-02	9.68e-03	2.84e-02
Th-228	9.91e-03	4.31e-03	7.39e-02	1.45e-02	7.11e-02	8.59e-02	7.14e-02	1.28e-01
Th-229	1.62e-03	6.51e-04	1.30e-02	2.79e-03	7.34e-03	9.20e-03	7.22e-03	1.97e-02
Th-230	6.74e-07	2.44e-07	6.14e-06	1.42e-06	1.44e-06	1.97e-06	1.43e-06	8.50e-06
Th-232	2.01e-07	6.90e-08	1.98e-06	4.61e-07	2.25e-07	3.26e-07	2.24e-07	2.66e-06
Pa-231	1.95e-04	7.65e-05	1.59e-03	3.53e-04	7.79e-04	1.00e-03	7.67e-04	2.32e-03
U-232	4.38e-07	1.60e-07	4.16e-06	9.54e-07	9.66e-07	1.33e-06	9.80e-07	5.68e-06
U-233	8.41e-07	3.21e-07	7.25e-06	1.64e-06	2.76e-06	3.63e-06	2.74e-06	1.03e-05
U-234	1.59e-07	5.60e-08	1.68e-06	3.86e-07	2.25e-07	3.32e-07	2.33e-07	2.20e-06
U-235	6.85e-04	2.57e-04	6.02e-03	1.39e-03	1.93e-03	2.64e-03	1.96e-03	8.44e-03
U-236	6.43e-08	2.23e-08	7.82e-07	1.74e-07	7.33e-08	1.11e-07	7.52e-08	9.58e-07
U-238	2.01e-04	8.29e-05	1.62e-03	3.38e-04	1.08e-03	1.33e-03	1.06e-03	2.55e-03
Np-237	1.24e-03	4.84e-04	1.01e-02	2.25e-03	4.81e-03	6.19e-03	4.74e-03	1.48e-02
Pu-236	6.27e-08	2.31e-08	8.18e-07	1.74e-07	1.61e-07	2.11e-07	1.59e-07	9.72e-07
Pu-238	2.40e-08	8.38e-09	4.64e-07	9.58e-08	3.79e-08	5.32e-08	3.82e-08	4.71e-07
Pu-239	2.40e-07	9.29e-08	2.10e-06	4.64e-07	8.67e-07	1.12e-06	8.55e-07	2.98e-06
Pu-240	2.25e-08	7.72e-09	4.41e-07	9.13e-08	2.83e-08	4.10e-08	2.86e-08	4.46e-07
Pu-241	3.09e-09	1.11e-09	2.89e-08	6.84e-09	4.68e-09	6.93e-09	4.78e-09	4.00e-08
Pu-242	2.17e-08	7.43e-09	3.95e-07	8.29e-08	2.42e-08	3.64e-08	2.46e-08	4.09e-07
Pu-244	2.41e-03	1.00e-03	1.84e-02	3.78e-03	1.31e-02	1.60e-02	1.28e-02	2.92e-02
Am-241	1.10e-05	3.43e-06	1.07e-04	2.54e-05	1.05e-06	1.84e-06	4.12e-07	1.47e-04
Am-242m	4.90e-05	1.90e-05	4.22e-04	9.35e-05	1.71e-04	2.18e-04	1.70e-04	6.24e-04
Am-243	7.31e-04	2.76e-04	6.29e-03	1.44e-03	2.18e-03	2.89e-03	2.16e-03	8.95e-03
Cm-242	2.84e-08	1.07e-08	5.27e-07	1.07e-07	9.35e-08	1.19e-07	9.25e-08	5.46e-07
Cm-243	5.21e-04	1.99e-04	4.44e-03	1.01e-03	1.68e-03	2.22e-03	1.66e-03	6.33e-03
Cm-244	2.38e-08	9.01e-09	4.46e-07	9.05e-08	8.20e-08	1.04e-07	8.12e-08	4.60e-07
Cm-245	2.28e-04	8.27e-05	2.11e-03	4.96e-04	4.10e-04	5.93e-04	4.20e-04	2.92e-03
Cm-246	2.79e-09	7.48e-10	2.23e-07	4.31e-08	0.00e+00	0.00e+00	0.00e+00	1.69e-07
Cm-247	2.23e-03	8.90e-04	1.77e-02	3.82e-03	9.81e-03	1.24e-02	9.61e-03	2.64e-02
Cm-248	2.46e-09	6.56e-10	2.05e-07	3.97e-08	0.00e+00	0.00e+00	0.00e+00	1.55e-07
Bk-249	6.40e-09	2.27e-09	6.76e-08	1.53e-08	1.56e-08	2.02e-08	1.53e-08	8.95e-08
Cf-248	3.54e-08	1.22e-08	6.15e-07	1.34e-07	3.28e-08	5.17e-08	3.24e-08	6.55e-07
Cf-249	2.20e-03	8.77e-04	1.75e-02	3.81e-03	9.61e-03	1.22e-02	9.42e-03	2.61e-02
Cf-250	2.31e-09	5.65e-10	2.47e-07	4.90e-08	0.00e+00	0.00e+00	0.00e+00	1.85e-07
Cf-251	3.88e-04	1.45e-04	3.44e-03	7.95e-04	1.03e-03	1.40e-03	1.04e-03	4.83e-03
Cf-252	3.66e-08	1.29e-08	5.71e-07	1.25e-07	5.41e-08	7.94e-08	5.53e-08	6.30e-07
Cf-254	1.34e-01	5.66e-02	1.00e+00	2.00e-01	7.87e-01	9.55e-01	7.74e-01	1.63e+00
Es-254	6.82e-03	2.90e-03	5.09e-02	1.01e-02	4.13e-02	5.00e-02	4.06e-02	8.35e-02

Table C.82 Effective dose equivalent coefficients for copper scenarios—part 1 (μSv/h per Bq/g)

Nuclide	Scrap pile	Slag pile	Baghouse	Large metal object	Small metal object	Small object on body
H-3	0.00e+00	0.00e+00	0.00e+00	0.00e+00	0.00e+00	0.00e+00
C-14	3.73e-08	5.43e-08	5.50e-08	9.04e-09	6.26e-10	6.01e-08
Na-22	7.22e-02	9.54e-02	1.68e-02	7.14e-03	5.44e-04	5.94e-04
P-32	1.52e-04	1.22e-04	2.04e-05	2.25e-05	1.68e-06	2.79e-05
S-35	4.22e-08	6.03e-08	5.77e-08	1.02e-08	7.11e-10	6.08e-08
Cl-36	1.75e-05	1.80e-05	3.99e-06	2.96e-06	2.18e-07	3.94e-08
K-40	5.77e-03	7.01e-03	1.20e-03	4.93e-04	3.79e-05	4.06e-05
Ca-41	0.00e+00	0.00e+00	0.00e+00	0.00e+00	0.00e+00	0.00e+00
Ca-45	2.54e-07	3.05e-07	1.88e-07	6.00e-08	4.23e-09	7.03e-16
Sc-46	6.96e-02	9.04e-02	1.57e-02	6.54e-03	5.00e-04	5.49e-04
Cr-51	7.15e-04	1.13e-03	2.19e-04	1.04e-04	7.79e-06	8.51e-06
Mn-53	0.00e+00	0.00e+00	0.00e+00	0.00e+00	0.00e+00	0.00e+00
Mn-54	2.79e-02	3.74e-02	6.53e-03	2.79e-03	2.12e-04	2.32e-04
Fe-55	1.04e-12	2.09e-12	7.63e-13	2.39e-13	1.72e-14	2.76e-14
Fe-59	4.20e-02	5.32e-02	9.19e-03	3.77e-03	2.89e-04	3.19e-04
Co-56	1.26e-01	1.55e-01	2.68e-02	1.09e-02	8.39e-04	9.18e-04
Co-57	7.77e-04	1.55e-03	5.69e-04	1.76e-04	1.26e-05	2.04e-05
Co-58	3.17e-02	4.31e-02	7.57e-03	3.27e-03	2.48e-04	2.70e-04
Co-60	8.97e-02	1.12e-01	1.93e-02	7.89e-03	6.06e-04	6.68e-04
Ni-59	4.63e-07	6.69e-07	1.22e-07	5.47e-08	4.13e-09	4.45e-09
Ni-63	5.59e-10	1.02e-09	2.25e-09	1.33e-10	9.11e-12	0.00e+00
Zn-65	2.03e-02	2.60e-02	4.50e-03	1.86e-03	1.43e-04	1.57e-04
As-73	4.66e-06	1.55e-05	2.29e-05	1.12e-06	7.69e-08	2.56e-07
Se-75	6.47e-03	1.07e-02	2.36e-03	1.04e-03	7.72e-05	9.12e-05
Sr-85	1.42e-02	2.06e-02	3.74e-03	1.68e-03	1.27e-04	1.37e-04
Sr-89	1.09e-04	9.03e-05	1.55e-05	1.65e-05	1.22e-06	2.40e-08
Sr-90	3.46e-04	2.68e-04	4.23e-05	4.72e-05	3.53e-06	1.14e-11
Y-91	2.45e-04	2.56e-04	4.40e-05	2.90e-05	2.18e-06	9.69e-07
Zr-93	6.54e-10	1.19e-09	2.63e-09	1.56e-10	1.07e-11	0.00e+00
Zr-95	2.39e-02	3.25e-02	5.72e-03	2.48e-03	1.88e-04	2.04e-04
Nb-93m	4.68e-08	2.14e-07	1.00e-06	1.19e-08	8.19e-10	7.31e-09
Nb-94	5.15e-02	6.95e-02	1.22e-02	5.22e-03	3.98e-04	4.33e-04
Nb-95	2.51e-02	3.41e-02	5.97e-03	2.58e-03	1.96e-04	2.13e-04
Mo-93	2.52e-07	1.16e-06	5.42e-06	6.43e-08	4.41e-09	3.97e-08
Tc-97	3.34e-07	1.48e-06	6.82e-06	8.36e-08	5.73e-09	4.72e-08
Tc-97m	1.49e-06	4.13e-06	8.00e-06	3.70e-07	2.59e-08	8.18e-08
Tc-99	5.88e-07	6.64e-07	3.39e-07	1.35e-07	9.61e-09	4.07e-07
Ru-103	1.42e-02	2.06e-02	3.75e-03	1.69e-03	1.27e-04	1.38e-04
Ru-106	7.21e-03	9.48e-03	1.67e-03	8.04e-04	6.09e-05	5.70e-05
Ag-108m	4.90e-02	6.89e-02	1.23e-02	5.46e-03	4.13e-04	4.47e-04
Ag-110m	9.15e-02	1.21e-01	2.11e-02	8.96e-03	6.84e-04	7.46e-04
Cd-109	1.09e-05	3.07e-05	4.26e-05	2.71e-06	1.89e-07	5.22e-07
Sn-113	6.52e-03	9.91e-03	1.89e-03	8.67e-04	6.52e-05	7.05e-05
Sb-124	6.38e-02	8.10e-02	1.41e-02	5.87e-03	4.50e-04	4.90e-04
Sb-125	1.20e-02	1.73e-02	3.21e-03	1.42e-03	1.07e-04	1.16e-04
Te-123m	1.33e-03	2.48e-03	7.35e-04	2.74e-04	2.00e-05	2.76e-05
Te-127m	1.35e-04	2.03e-04	6.11e-05	1.83e-05	1.37e-06	1.47e-06
I-125	6.50e-06	2.46e-05	8.99e-05	1.51e-06	1.03e-07	5.09e-07
I-129	5.19e-06	1.91e-05	6.26e-05	1.21e-06	8.22e-08	3.73e-07
I-131	9.65e-03	1.46e-02	2.74e-03	1.27e-03	9.58e-05	1.04e-04
Cs-134	4.98e-02	6.83e-02	1.21e-02	5.25e-03	3.99e-04	4.33e-04
Cs-135	3.93e-07	4.57e-07	2.56e-07	9.18e-08	6.50e-09	3.08e-07
Cs-137	1.77e-02	2.46e-02	4.36e-03	1.91e-03	1.45e-04	1.57e-04
Ba-133	7.91e-03	1.24e-02	2.56e-03	1.12e-03	8.40e-05	9.34e-05
Ce-139	1.40e-03	2.60e-03	7.88e-04	2.84e-04	2.08e-05	2.82e-05
Ce-141	5.98e-04	1.14e-03	3.75e-04	1.29e-04	9.38e-06	1.37e-05
Ce-144	1.73e-03	1.92e-03	3.70e-04	1.90e-04	1.43e-05	1.01e-05
Pm-147	1.47e-07	2.04e-07	1.34e-07	3.52e-08	2.48e-09	5.95e-10

Table C.82 Effective dose equivalent coefficients for copper scenarios—part 1 (:Sv/h per Bq/g)

Nuclide	Scrap pile	Slag pile	Baghouse	Large metal object	Small metal object	Small object on body
Sm-151	1.45e-09	3.52e-09	1.11e-08	3.46e-10	2.37e-11	4.33e-11
Eu-152	3.73e-02	4.88e-02	8.74e-03	3.61e-03	2.76e-04	3.05e-04
Eu-154	3.68e-02	4.78e-02	8.50e-03	3.50e-03	2.67e-04	2.96e-04
Eu-155	1.79e-04	4.35e-04	2.56e-04	4.41e-05	3.11e-06	6.47e-06
Gd-153	2.31e-04	5.60e-04	4.23e-04	5.67e-05	4.00e-06	8.54e-06
Tb-160	3.68e-02	4.85e-02	8.57e-03	3.59e-03	2.74e-04	3.02e-04
Tm-170	2.95e-05	3.94e-05	2.07e-05	5.66e-06	4.10e-07	3.05e-07
Tm-171	5.59e-07	1.84e-06	2.40e-06	1.35e-07	9.32e-09	2.94e-08
Ta-182	4.22e-02	5.40e-02	9.64e-03	3.88e-03	2.97e-04	3.31e-04
W-181	4.11e-05	1.34e-04	1.57e-04	9.99e-06	6.89e-07	2.12e-06
W-185	1.77e-06	2.03e-06	8.36e-07	3.82e-07	2.75e-08	8.09e-07
Os-185	2.05e-02	2.84e-02	5.18e-03	2.20e-03	1.67e-04	1.82e-04
Ir-192	2.02e-02	3.07e-02	5.82e-03	2.68e-03	2.02e-04	2.20e-04
Tl-204	1.36e-05	1.67e-05	7.44e-06	2.63e-06	1.91e-07	3.66e-06
Pb-210	4.09e-05	3.78e-05	1.47e-05	6.84e-06	5.04e-07	9.83e-06
Bi-207	4.92e-02	6.53e-02	1.16e-02	4.87e-03	3.71e-04	4.08e-04
Po-210	3.23e-07	4.34e-07	7.61e-08	3.26e-08	2.48e-09	2.70e-09
Ra-226	5.76e-02	7.37e-02	1.30e-02	5.43e-03	4.15e-04	4.53e-04
Ra-228	2.82e-02	3.72e-02	6.57e-03	2.77e-03	2.12e-04	2.32e-04
Ac-227	8.27e-03	1.29e-02	2.71e-03	1.17e-03	8.77e-05	9.92e-05
Th-228	4.86e-02	5.89e-02	1.04e-02	4.20e-03	3.23e-04	3.53e-04
Th-229	6.06e-03	9.03e-03	1.97e-03	7.78e-04	5.83e-05	6.81e-05
Th-230	1.79e-06	3.83e-06	2.16e-06	3.67e-07	2.65e-08	4.81e-08
Th-232	4.85e-07	1.28e-06	1.23e-06	1.13e-07	8.02e-09	2.01e-08
Pa-231	6.54e-04	1.05e-03	2.25e-04	9.79e-05	7.33e-06	8.28e-06
U-232	1.20e-06	2.50e-06	1.84e-06	2.46e-07	1.78e-08	3.43e-08
U-233	2.59e-06	4.57e-06	1.69e-06	4.42e-07	3.26e-08	4.54e-08
U-234	4.10e-07	9.96e-07	1.21e-06	9.67e-08	6.86e-09	1.74e-08
U-235	1.93e-03	3.54e-03	1.08e-03	3.72e-04	2.73e-05	3.68e-05
U-236	1.77e-07	4.82e-07	8.78e-07	4.31e-08	3.04e-09	1.01e-08
U-238	8.86e-04	1.05e-03	2.11e-04	9.95e-05	7.50e-06	5.82e-06
Np-237	4.12e-03	6.68e-03	1.47e-03	6.21e-04	4.64e-05	5.42e-05
Pu-236	2.30e-07	5.56e-07	1.16e-06	4.39e-08	3.13e-09	1.12e-08
Pu-238	1.01e-07	3.20e-07	9.82e-07	2.34e-08	1.64e-09	8.33e-09
Pu-239	8.05e-07	1.39e-06	7.54e-07	1.25e-07	9.27e-09	1.45e-08
Pu-240	9.26e-08	3.03e-07	9.40e-07	2.22e-08	1.55e-09	7.95e-09
Pu-241	7.41e-09	1.59e-08	6.91e-09	1.74e-09	1.24e-10	2.20e-10
Pu-242	8.23e-08	2.66e-07	7.85e-07	2.02e-08	1.41e-09	6.83e-09
Pu-244	1.02e-02	1.38e-02	2.48e-03	1.08e-03	8.22e-05	8.78e-05
Am-241	2.40e-05	7.89e-05	9.55e-05	5.84e-06	4.03e-07	1.26e-06
Am-242m	1.66e-04	2.68e-04	9.00e-05	2.49e-05	1.83e-06	2.73e-06
Am-243	2.16e-03	3.91e-03	1.18e-03	3.84e-04	2.83e-05	3.92e-05
Cm-242	1.42e-07	3.84e-07	1.13e-06	2.67e-08	1.89e-09	8.86e-09
Cm-243	1.57e-03	2.74e-03	7.00e-04	2.73e-04	2.02e-05	2.58e-05
Cm-244	1.21e-07	3.25e-07	9.57e-07	2.25e-08	1.60e-09	7.52e-09
Cm-245	5.66e-04	1.16e-03	4.54e-04	1.28e-04	9.18e-06	1.52e-05
Cm-246	4.01e-08	1.72e-07	7.49e-07	9.98e-09	6.84e-10	5.27e-09
Cm-247	8.07e-03	1.23e-02	2.37e-03	1.07e-03	8.07e-05	8.84e-05
Cm-248	3.69e-08	1.59e-07	6.93e-07	9.18e-09	6.29e-10	4.87e-09
Bk-249	2.21e-08	3.52e-08	2.36e-08	4.13e-09	2.95e-10	1.63e-10
Cf-248	1.30e-07	4.08e-07	1.13e-06	3.22e-08	2.25e-09	9.40e-09
Cf-249	7.88e-03	1.21e-02	2.30e-03	1.07e-03	8.03e-05	8.73e-05
Cf-250	4.54e-08	1.92e-07	8.43e-07	1.11e-08	7.62e-10	5.55e-09
Cf-251	1.08e-03	2.00e-03	5.99e-04	2.11e-04	1.54e-05	2.17e-05
Cf-252	1.29e-07	3.72e-07	9.30e-07	3.06e-08	2.15e-09	8.03e-09
Cf-254	5.96e-01	7.86e-01	1.37e-01	5.76e-02	4.40e-03	4.82e-03
Es-254	3.09e-02	4.02e-02	7.01e-03	2.91e-03	2.23e-04	2.45e-04

Table C.83 Effective dose equivalent coefficients for copper scenarios—part 2 (:Sv/h per Bq/g)

Nuclide	Scrap truck	Dust truck		Slag truck	Truck loaded with metal product	
		Driver's seat	Sleeper		Driver's seat	Sleeper
H-3	0.00e+00	0.00e+00	0.00e+00	0.00e+00	0.00e+00	0.00e+00
C-14	7.37e-10	5.82e-09	1.05e-08	6.51e-09	4.85e-09	6.48e-09
Na-22	2.02e-02	1.48e-02	2.67e-02	1.26e-02	1.32e-02	1.79e-02
P-32	4.00e-05	2.36e-05	4.16e-05	1.86e-05	2.95e-05	3.89e-05
S-35	1.06e-09	6.82e-09	1.23e-08	7.55e-09	5.73e-09	7.62e-09
Cl-36	4.14e-06	3.25e-06	5.70e-06	2.80e-06	3.39e-06	4.45e-06
K-40	1.61e-03	1.11e-03	2.04e-03	9.28e-04	1.02e-03	1.41e-03
Ca-41	0.00e+00	0.00e+00	0.00e+00	0.00e+00	0.00e+00	0.00e+00
Ca-45	2.17e-08	4.74e-08	8.38e-08	4.84e-08	4.31e-08	5.61e-08
Sc-46	1.95e-02	1.39e-02	2.52e-02	1.17e-02	1.25e-02	1.71e-02
Cr-51	2.08e-04	1.79e-04	3.14e-04	1.65e-04	1.41e-04	1.86e-04
Mn-53	0.00e+00	0.00e+00	0.00e+00	0.00e+00	0.00e+00	0.00e+00
Mn-54	7.86e-03	5.71e-03	1.03e-02	4.85e-03	5.10e-03	6.93e-03
Fe-55	1.65e-13	3.62e-13	6.27e-13	4.26e-13	2.07e-13	2.66e-13
Fe-59	1.18e-02	8.26e-03	1.51e-02	6.95e-03	7.50e-03	1.03e-02
Co-56	3.51e-02	2.46e-02	4.52e-02	2.08e-02	2.23e-02	3.08e-02
Co-57	1.24e-04	2.67e-04	4.63e-04	3.14e-04	1.54e-04	1.99e-04
Co-58	8.92e-03	6.58e-03	1.18e-02	5.61e-03	5.84e-03	7.90e-03
Co-60	2.51e-02	1.75e-02	3.20e-02	1.47e-02	1.60e-02	2.19e-02
Ni-59	1.30e-07	1.03e-07	1.82e-07	8.96e-08	8.78e-08	1.18e-07
Ni-63	3.36e-14	2.26e-11	4.31e-11	2.77e-11	1.78e-11	2.72e-11
Zn-65	5.68e-03	4.02e-03	7.31e-03	3.38e-03	3.64e-03	4.98e-03
As-73	5.05e-09	1.25e-06	2.31e-06	1.89e-06	5.75e-07	7.83e-07
Se-75	1.76e-03	1.73e-03	3.02e-03	1.68e-03	1.29e-03	1.69e-03
Sr-85	3.98e-03	3.15e-03	5.60e-03	2.75e-03	2.70e-03	3.62e-03
Sr-89	2.85e-05	1.74e-05	3.05e-05	1.38e-05	2.12e-05	2.80e-05
Sr-90	9.28e-05	5.15e-05	9.10e-05	3.94e-05	6.61e-05	8.79e-05
Y-91	6.63e-05	4.35e-05	7.81e-05	3.56e-05	4.55e-05	6.13e-05
Zr-93	1.12e-13	2.72e-11	5.17e-11	3.32e-11	2.14e-11	3.24e-11
Zr-95	6.73e-03	4.96e-03	8.92e-03	4.23e-03	4.40e-03	5.95e-03
Nb-93m	3.55e-18	3.47e-12	6.25e-12	4.71e-12	1.45e-12	2.73e-12
Nb-94	1.45e-02	1.06e-02	1.91e-02	9.02e-03	9.44e-03	1.28e-02
Nb-95	7.07e-03	5.20e-03	9.35e-03	4.42e-03	4.62e-03	6.25e-03
Mo-93	0.00e+00	5.88e-12	8.93e-12	6.60e-12	9.28e-13	2.37e-12
Tc-97	0.00e+00	2.68e-11	4.38e-11	3.41e-11	5.68e-12	1.33e-11
Tc-97m	7.14e-08	4.06e-07	7.13e-07	5.25e-07	2.13e-07	2.75e-07
Tc-99	6.68e-08	1.12e-07	1.97e-07	1.11e-07	1.05e-07	1.36e-07
Ru-103	3.98e-03	3.16e-03	5.62e-03	2.76e-03	2.70e-03	3.62e-03
Ru-106	2.02e-03	1.48e-03	2.65e-03	1.26e-03	1.35e-03	1.81e-03
Ag-108m	1.38e-02	1.05e-02	1.88e-02	9.11e-03	9.16e-03	1.23e-02
Ag-110m	2.57e-02	1.86e-02	3.36e-02	1.58e-02	1.66e-02	2.27e-02
Cd-109	3.67e-07	3.35e-06	5.91e-06	4.50e-06	1.69e-06	2.18e-06
Sn-113	1.89e-03	1.55e-03	2.72e-03	1.39e-03	1.27e-03	1.68e-03
Sb-124	1.78e-02	1.27e-02	2.32e-02	1.08e-02	1.15e-02	1.57e-02
Sb-125	3.39e-03	2.67e-03	4.74e-03	2.34e-03	2.27e-03	3.05e-03
Te-123m	2.97e-04	4.26e-04	7.37e-04	4.64e-04	2.69e-04	3.46e-04
Te-127m	3.75e-05	3.09e-05	5.45e-05	2.77e-05	2.59e-05	3.43e-05
I-125	3.72e-12	2.38e-07	4.61e-07	3.79e-07	1.06e-07	1.83e-07
I-129	8.70e-10	3.70e-07	7.10e-07	5.77e-07	1.70e-07	2.73e-07
I-131	2.79e-03	2.28e-03	4.02e-03	2.05e-03	1.87e-03	2.48e-03
Cs-134	1.40e-02	1.04e-02	1.87e-02	8.94e-03	9.21e-03	1.25e-02
Cs-135	3.87e-08	7.41e-08	1.31e-07	7.46e-08	6.85e-08	8.91e-08
Cs-137	5.00e-03	3.75e-03	6.72e-03	3.22e-03	3.30e-03	4.45e-03
Ba-133	2.28e-03	1.95e-03	3.42e-03	1.79e-03	1.55e-03	2.05e-03
Ce-139	3.23e-04	4.42e-04	7.65e-04	4.75e-04	2.84e-04	3.66e-04
Ce-141	1.22e-04	1.98e-04	3.43e-04	2.22e-04	1.21e-04	1.55e-04
Ce-144	4.66e-04	3.22e-04	5.82e-04	2.76e-04	3.16e-04	4.29e-04
Pm-147	1.09e-08	3.02e-08	5.34e-08	3.28e-08	2.43e-08	3.18e-08

Table C.83 Effective dose equivalent coefficients for copper scenarios—part 2 (:Sv/h per Bq/g)

Nuclide	Scrap truck	Dust truck		Slag truck	Truck loaded with metal product	
		Driver's seat	Sleeper		Driver's seat	Sleeper
Sm-151	2.05e-13	5.97e-11	1.13e-10	7.26e-11	4.68e-11	6.96e-11
Eu-152	1.04e-02	7.58e-03	1.37e-02	6.47e-03	6.76e-03	9.22e-03
Eu-154	1.03e-02	7.41e-03	1.34e-02	6.30e-03	6.64e-03	9.07e-03
Eu-155	1.21e-05	6.38e-05	1.12e-04	8.30e-05	3.31e-05	4.28e-05
Gd-153	1.58e-05	7.92e-05	1.39e-04	1.03e-04	4.12e-05	5.35e-05
Tb-160	1.03e-02	7.48e-03	1.35e-02	6.37e-03	6.67e-03	9.08e-03
Tm-170	5.51e-06	6.20e-06	1.09e-05	6.51e-06	5.58e-06	7.29e-06
Tm-171	1.52e-09	1.60e-07	2.93e-07	2.38e-07	7.42e-08	9.99e-08
Ta-182	1.17e-02	8.38e-03	1.53e-02	7.11e-03	7.55e-03	1.03e-02
W-181	2.12e-07	1.24e-05	2.28e-05	1.85e-05	5.81e-06	7.77e-06
W-185	2.82e-07	3.59e-07	6.29e-07	3.55e-07	3.34e-07	4.33e-07
Os-185	5.75e-03	4.32e-03	7.75e-03	3.72e-03	3.80e-03	5.13e-03
Ir-192	5.77e-03	4.79e-03	8.45e-03	4.33e-03	3.91e-03	5.19e-03
Tl-204	2.61e-06	2.73e-06	4.81e-06	2.76e-06	2.60e-06	3.39e-06
Pb-210	9.83e-06	6.81e-06	1.20e-05	5.77e-06	7.88e-06	1.03e-05
Bi-207	1.38e-02	1.01e-02	1.82e-02	8.58e-03	8.96e-03	1.22e-02
Po-210	9.08e-08	6.63e-08	1.19e-07	5.64e-08	5.91e-08	8.01e-08
Ra-226	1.61e-02	1.16e-02	2.11e-02	9.90e-03	1.04e-02	1.42e-02
Ra-228	7.92e-03	5.76e-03	1.04e-02	4.91e-03	5.13e-03	6.98e-03
Ac-227	2.30e-03	2.03e-03	3.58e-03	1.89e-03	1.61e-03	2.13e-03
Th-228	1.34e-02	9.57e-03	1.76e-02	8.18e-03	8.57e-03	1.19e-02
Th-229	1.64e-03	1.41e-03	2.51e-03	1.30e-03	1.15e-03	1.53e-03
Th-230	3.29e-07	5.51e-07	9.66e-07	6.35e-07	3.41e-07	4.43e-07
Th-232	4.81e-08	1.55e-07	2.75e-07	2.01e-07	8.36e-08	1.09e-07
Pa-231	1.87e-04	1.67e-04	2.92e-04	1.56e-04	1.29e-04	1.70e-04
U-232	2.17e-07	3.63e-07	6.34e-07	4.14e-07	2.24e-07	2.91e-07
U-233	6.49e-07	7.13e-07	1.24e-06	7.22e-07	5.08e-07	6.64e-07
U-234	4.55e-08	1.29e-07	2.25e-07	1.59e-07	7.09e-08	9.18e-08
U-235	4.48e-04	5.85e-04	1.01e-03	6.16e-04	3.88e-04	5.02e-04
U-236	1.40e-08	5.07e-08	8.91e-08	6.43e-08	2.71e-08	3.51e-08
U-238	2.39e-04	1.69e-04	3.05e-04	1.45e-04	1.63e-04	2.20e-04
Np-237	1.15e-03	1.06e-03	1.85e-03	1.01e-03	8.12e-04	1.07e-03
Pu-236	3.50e-08	5.06e-08	8.95e-08	5.60e-08	3.38e-08	4.47e-08
Pu-238	7.76e-09	1.86e-08	3.28e-08	2.26e-08	1.08e-08	1.41e-08
Pu-239	2.02e-07	2.04e-07	3.58e-07	2.01e-07	1.52e-07	2.01e-07
Pu-240	5.65e-09	1.70e-08	3.01e-08	2.14e-08	9.43e-09	1.23e-08
Pu-241	9.39e-10	2.60e-09	4.52e-09	3.17e-09	1.44e-09	1.86e-09
Pu-242	4.68e-09	1.67e-08	2.93e-08	2.11e-08	8.94e-09	1.17e-08
Pu-244	2.85e-03	2.14e-03	3.84e-03	1.84e-03	1.88e-03	2.55e-03
Am-241	1.56e-07	7.21e-06	1.32e-05	1.07e-05	3.38e-06	4.52e-06
Am-242m	3.55e-05	4.24e-05	7.53e-05	4.43e-05	3.06e-05	4.09e-05
Am-243	5.09e-04	6.18e-04	1.08e-03	6.46e-04	4.26e-04	5.56e-04
Cm-242	2.07e-08	2.27e-08	4.03e-08	2.33e-08	1.67e-08	2.23e-08
Cm-243	3.95e-04	4.43e-04	7.73e-04	4.50e-04	3.13e-04	4.09e-04
Cm-244	1.82e-08	1.92e-08	3.41e-08	1.94e-08	1.43e-08	1.91e-08
Cm-245	8.65e-05	1.93e-04	3.35e-04	2.28e-04	1.11e-04	1.44e-04
Cm-246	9.96e-13	1.10e-09	2.08e-09	1.70e-09	5.06e-10	7.33e-10
Cm-247	2.31e-03	1.91e-03	3.38e-03	1.73e-03	1.57e-03	2.08e-03
Cm-248	8.06e-13	9.48e-10	1.79e-09	1.46e-09	4.36e-10	6.34e-10
Bk-249	3.69e-09	4.42e-09	7.84e-09	4.41e-09	3.47e-09	4.62e-09
Cf-248	5.56e-09	2.76e-08	4.85e-08	3.56e-08	1.44e-08	1.87e-08
Cf-249	2.28e-03	1.89e-03	3.33e-03	1.71e-03	1.54e-03	2.04e-03
Cf-250	3.36e-13	5.79e-10	1.10e-09	9.00e-10	2.64e-10	3.96e-10
Cf-251	2.35e-04	3.31e-04	5.75e-04	3.58e-04	2.15e-04	2.79e-04
Cf-252	1.11e-08	2.94e-08	5.12e-08	3.57e-08	1.64e-08	2.13e-08
Cf-254	1.67e-01	1.20e-01	2.18e-01	1.02e-01	1.08e-01	1.47e-01
Es-254	8.67e-03	6.18e-03	1.12e-02	5.22e-03	5.57e-03	7.61e-03

Table C.84 Effective dose coefficients for external exposure in copper scenarios—part 1 (:Sv/h per Bq/g)

Nuclide	Scrap pile	Slag pile	Baghouse	Large metal object	Small metal object	Small object on body
H-3	0.00e+00	0.00e+00	0.00e+00	0.00e+00	0.00e+00	0.00e+00
C-14	3.59e-08	4.89e-08	4.60e-08	8.72e-09	6.03e-10	2.40e-08
Na-22	7.16e-02	9.33e-02	1.64e-02	7.08e-03	5.40e-04	2.74e-04
P-32	1.51e-04	1.18e-04	1.94e-05	2.24e-05	1.67e-06	1.12e-05
S-35	4.09e-08	5.46e-08	4.86e-08	9.93e-09	6.88e-10	2.42e-08
Cl-36	1.74e-05	1.74e-05	3.79e-06	2.95e-06	2.17e-07	1.79e-08
K-40	5.75e-03	6.87e-03	1.18e-03	4.91e-04	3.77e-05	1.91e-05
Ca-41	0.00e+00	0.00e+00	0.00e+00	0.00e+00	0.00e+00	0.00e+00
Ca-45	2.51e-07	2.87e-07	1.65e-07	5.93e-08	4.18e-09	2.75e-16
Sc-46	6.89e-02	8.82e-02	1.54e-02	6.48e-03	4.96e-04	2.53e-04
Cr-51	7.10e-04	1.09e-03	2.12e-04	1.03e-04	7.76e-06	3.82e-06
Mn-53	0.00e+00	0.00e+00	0.00e+00	0.00e+00	0.00e+00	0.00e+00
Mn-54	2.76e-02	3.65e-02	6.40e-03	2.76e-03	2.10e-04	1.06e-04
Fe-55	1.03e-12	2.04e-12	7.45e-13	2.38e-13	1.71e-14	1.41e-14
Fe-59	4.17e-02	5.20e-02	9.04e-03	3.75e-03	2.87e-04	1.48e-04
Co-56	1.25e-01	1.52e-01	2.63e-02	1.09e-02	8.35e-04	4.30e-04
Co-57	7.74e-04	1.52e-03	5.56e-04	1.75e-04	1.26e-05	1.04e-05
Co-58	3.13e-02	4.20e-02	7.41e-03	3.23e-03	2.46e-04	1.24e-04
Co-60	8.91e-02	1.10e-01	1.90e-02	7.85e-03	6.03e-04	3.10e-04
Ni-59	4.57e-07	6.53e-07	1.18e-07	5.41e-08	4.10e-09	2.02e-09
Ni-63	4.58e-10	7.65e-10	1.65e-09	1.09e-10	7.41e-12	0.00e+00
Zn-65	2.01e-02	2.54e-02	4.42e-03	1.85e-03	1.41e-04	7.25e-05
As-73	4.53e-06	1.44e-05	2.12e-05	1.09e-06	7.47e-08	1.32e-07
Se-75	6.43e-03	1.04e-02	2.29e-03	1.03e-03	7.70e-05	4.21e-05
Sr-85	1.41e-02	2.01e-02	3.63e-03	1.66e-03	1.26e-04	6.21e-05
Sr-89	1.09e-04	8.76e-05	1.48e-05	1.64e-05	1.22e-06	1.10e-08
Sr-90	3.43e-04	2.60e-04	4.04e-05	4.69e-05	3.51e-06	5.08e-12
Y-91	2.43e-04	2.50e-04	4.28e-05	2.88e-05	2.17e-06	4.50e-07
Zr-93	5.36e-10	8.95e-10	1.93e-09	1.28e-10	8.69e-12	0.00e+00
Zr-95	2.36e-02	3.18e-02	5.59e-03	2.45e-03	1.86e-04	9.33e-05
Nb-93m	3.19e-08	1.42e-07	6.67e-07	8.10e-09	5.58e-10	2.84e-09
Nb-94	5.09e-02	6.78e-02	1.19e-02	5.17e-03	3.94e-04	1.98e-04
Nb-95	2.48e-02	3.32e-02	5.84e-03	2.55e-03	1.94e-04	9.74e-05
Mo-93	1.72e-07	7.69e-07	3.61e-06	4.36e-08	3.00e-09	1.54e-08
Tc-97	2.30e-07	9.83e-07	4.54e-06	5.73e-08	3.93e-09	1.83e-08
Tc-97m	1.39e-06	3.57e-06	5.76e-06	3.45e-07	2.42e-08	3.73e-08
Tc-99	5.84e-07	6.30e-07	3.03e-07	1.34e-07	9.54e-09	1.64e-07
Ru-103	1.40e-02	2.01e-02	3.65e-03	1.67e-03	1.26e-04	6.25e-05
Ru-106	7.13e-03	9.25e-03	1.63e-03	7.97e-04	6.04e-05	2.60e-05
Ag-108m	4.84e-02	6.72e-02	1.20e-02	5.40e-03	4.10e-04	2.03e-04
Ag-110m	9.05e-02	1.18e-01	2.07e-02	8.88e-03	6.78e-04	3.43e-04
Cd-109	1.06e-05	2.78e-05	3.31e-05	2.63e-06	1.84e-07	2.54e-07
Sn-113	6.46e-03	9.63e-03	1.82e-03	8.60e-04	6.48e-05	3.18e-05
Sb-124	6.34e-02	7.93e-02	1.38e-02	5.84e-03	4.47e-04	2.28e-04
Sb-125	1.19e-02	1.69e-02	3.11e-03	1.41e-03	1.06e-04	5.29e-05
Te-123m	1.32e-03	2.40e-03	7.09e-04	2.73e-04	2.00e-05	1.34e-05
Te-127m	1.34e-04	1.96e-04	5.38e-05	1.81e-05	1.36e-06	6.57e-07
I-125	5.31e-06	1.81e-05	6.61e-05	1.23e-06	8.35e-08	1.99e-07
I-129	4.42e-06	1.47e-05	4.79e-05	1.03e-06	6.97e-08	1.51e-07
I-131	9.56e-03	1.42e-02	2.66e-03	1.26e-03	9.52e-05	4.68e-05
Cs-134	4.92e-02	6.67e-02	1.18e-02	5.19e-03	3.95e-04	1.98e-04
Cs-135	3.89e-07	4.32e-07	2.27e-07	9.10e-08	6.44e-09	1.23e-07
Cs-137	1.75e-02	2.40e-02	4.25e-03	1.89e-03	1.44e-04	7.15e-05
Ba-133	7.85e-03	1.20e-02	2.46e-03	1.11e-03	8.35e-05	4.22e-05
Ce-139	1.40e-03	2.52e-03	7.52e-04	2.83e-04	2.07e-05	1.35e-05
Ce-141	5.95e-04	1.11e-03	3.62e-04	1.29e-04	9.35e-06	6.75e-06
Ce-144	1.72e-03	1.87e-03	3.59e-04	1.89e-04	1.43e-05	4.86e-06
Pm-147	1.45e-07	1.92e-07	1.18e-07	3.47e-08	2.44e-09	3.05e-10

Table C.84 Effective dose coefficients for external exposure in copper scenarios—part 1 (:Sv/h per Bq/g)

Nuclide	Scrap pile	Slag pile	Baghouse	Large metal object	Small metal object	Small object on body
Sm-151	1.18e-09	2.56e-09	7.75e-09	2.80e-10	1.91e-11	1.67e-11
Eu-152	3.70e-02	4.77e-02	8.55e-03	3.59e-03	2.74e-04	1.41e-04
Eu-154	3.65e-02	4.67e-02	8.33e-03	3.47e-03	2.65e-04	1.37e-04
Eu-155	1.80e-04	4.21e-04	2.45e-04	4.43e-05	3.12e-06	3.41e-06
Gd-153	2.29e-04	5.37e-04	3.91e-04	5.63e-05	3.97e-06	4.44e-06
Tb-160	3.64e-02	4.73e-02	8.40e-03	3.56e-03	2.72e-04	1.39e-04
Tm-170	2.94e-05	3.80e-05	1.96e-05	5.66e-06	4.09e-07	1.61e-07
Tm-171	5.50e-07	1.71e-06	2.24e-06	1.33e-07	9.16e-09	1.53e-08
Ta-182	4.18e-02	5.28e-02	9.47e-03	3.85e-03	2.95e-04	1.54e-04
W-181	4.08e-05	1.26e-04	1.47e-04	9.94e-06	6.84e-07	1.11e-06
W-185	1.76e-06	1.95e-06	7.74e-07	3.81e-07	2.73e-08	3.27e-07
Os-185	2.02e-02	2.77e-02	5.05e-03	2.17e-03	1.65e-04	8.34e-05
Ir-192	2.00e-02	2.98e-02	5.64e-03	2.66e-03	2.01e-04	9.93e-05
Tl-204	1.36e-05	1.61e-05	7.09e-06	2.64e-06	1.91e-07	1.50e-06
Pb-210	4.06e-05	3.62e-05	1.34e-05	6.80e-06	5.01e-07	3.96e-06
Bi-207	4.87e-02	6.38e-02	1.14e-02	4.83e-03	3.68e-04	1.88e-04
Po-210	3.19e-07	4.24e-07	7.44e-08	3.23e-08	2.46e-09	1.24e-09
Ra-226	5.73e-02	7.21e-02	1.27e-02	5.40e-03	4.13e-04	2.10e-04
Ra-228	2.80e-02	3.63e-02	6.44e-03	2.75e-03	2.10e-04	1.07e-04
Ac-227	8.21e-03	1.25e-02	2.63e-03	1.17e-03	8.74e-05	4.54e-05
Th-228	4.85e-02	5.77e-02	1.02e-02	4.19e-03	3.23e-04	1.67e-04
Th-229	6.01e-03	8.79e-03	1.91e-03	7.73e-04	5.80e-05	3.17e-05
Th-230	1.79e-06	3.68e-06	1.97e-06	3.66e-07	2.64e-08	2.38e-08
Th-232	4.81e-07	1.20e-06	1.08e-06	1.12e-07	7.94e-09	1.00e-08
Pa-231	6.50e-04	1.02e-03	2.15e-04	9.74e-05	7.30e-06	3.74e-06
U-232	1.18e-06	2.37e-06	1.55e-06	2.43e-07	1.75e-08	1.66e-08
U-233	2.58e-06	4.40e-06	1.51e-06	4.39e-07	3.24e-08	2.12e-08
U-234	3.98e-07	9.21e-07	9.64e-07	9.37e-08	6.66e-09	8.32e-09
U-235	1.92e-03	3.42e-03	1.01e-03	3.71e-04	2.73e-05	1.73e-05
U-236	1.67e-07	4.27e-07	6.65e-07	4.06e-08	2.86e-09	4.60e-09
U-238	8.78e-04	1.03e-03	2.05e-04	9.88e-05	7.45e-06	2.75e-06
Np-237	4.09e-03	6.48e-03	1.42e-03	6.18e-04	4.62e-05	2.50e-05
Pu-236	2.14e-07	4.76e-07	8.39e-07	4.00e-08	2.87e-09	4.80e-09
Pu-238	8.79e-08	2.53e-07	6.87e-07	2.00e-08	1.41e-09	3.45e-09
Pu-239	7.93e-07	1.32e-06	6.16e-07	1.23e-07	9.12e-09	6.64e-09
Pu-240	7.99e-08	2.39e-07	6.61e-07	1.89e-08	1.33e-09	3.31e-09
Pu-241	7.40e-09	1.55e-08	6.70e-09	1.74e-09	1.24e-10	1.14e-10
Pu-242	7.19e-08	2.12e-07	5.54e-07	1.75e-08	1.23e-09	2.88e-09
Pu-244	1.01e-02	1.35e-02	2.42e-03	1.07e-03	8.16e-05	4.02e-05
Am-241	2.38e-05	7.39e-05	8.82e-05	5.79e-06	3.98e-07	6.58e-07
Am-242m	1.64e-04	2.61e-04	8.57e-05	2.48e-05	1.82e-06	1.37e-06
Am-243	2.16e-03	3.79e-03	1.14e-03	3.84e-04	2.82e-05	1.89e-05
Cm-242	1.26e-07	3.04e-07	7.78e-07	2.26e-08	1.62e-09	3.59e-09
Cm-243	1.57e-03	2.66e-03	6.79e-04	2.72e-04	2.01e-05	1.22e-05
Cm-244	1.07e-07	2.57e-07	6.60e-07	1.91e-08	1.36e-09	3.03e-09
Cm-245	5.65e-04	1.13e-03	4.41e-04	1.28e-04	9.16e-06	7.79e-06
Cm-246	2.93e-08	1.20e-07	5.12e-07	7.24e-09	4.96e-10	2.07e-09
Cm-247	7.99e-03	1.20e-02	2.30e-03	1.06e-03	8.02e-05	4.01e-05
Cm-248	2.69e-08	1.10e-07	4.73e-07	6.65e-09	4.56e-10	1.91e-09
Bk-249	2.14e-08	3.25e-08	1.98e-08	3.97e-09	2.84e-10	7.44e-11
Cf-248	1.15e-07	3.29e-07	7.89e-07	2.84e-08	1.98e-09	4.02e-09
Cf-249	7.81e-03	1.17e-02	2.22e-03	1.06e-03	7.98e-05	3.94e-05
Cf-250	3.29e-08	1.31e-07	5.73e-07	8.02e-09	5.49e-10	2.16e-09
Cf-251	1.07e-03	1.94e-03	5.80e-04	2.10e-04	1.54e-05	1.05e-05
Cf-252	1.16e-07	3.05e-07	6.54e-07	2.74e-08	1.93e-09	3.43e-09
Cf-254	5.89e-01	7.67e-01	1.34e-01	5.71e-02	4.36e-03	2.21e-03
Es-254	3.06e-02	3.93e-02	6.87e-03	2.89e-03	2.21e-04	1.13e-04

Table C.85 Effective dose coefficients for external exposure in copper scenarios—part 2 (:Sv/h per Bq/g)

Nuclide	Scrap truck	Dust truck		Slag truck	Truck loaded with metal product	
		Driver's seat	Sleeper		Driver's seat	Sleeper
H-3	0.00e+00	0.00e+00	0.00e+00	0.00e+00	0.00e+00	0.00e+00
C-14	6.64e-10	4.91e-09	8.87e-09	5.43e-09	4.11e-09	6.40e-09
Na-22	1.89e-02	1.38e-02	2.50e-02	1.18e-02	1.23e-02	1.78e-02
P-32	3.72e-05	2.19e-05	3.85e-05	1.71e-05	2.73e-05	3.87e-05
S-35	9.59e-10	5.79e-09	1.04e-08	6.34e-09	4.89e-09	7.55e-09
Cl-36	3.84e-06	2.99e-06	5.24e-06	2.57e-06	3.13e-06	4.44e-06
K-40	1.51e-03	1.04e-03	1.91e-03	8.71e-04	9.57e-04	1.40e-03
Ca-41	0.00e+00	0.00e+00	0.00e+00	0.00e+00	0.00e+00	0.00e+00
Ca-45	1.99e-08	4.19e-08	7.41e-08	4.24e-08	3.82e-08	5.61e-08
Sc-46	1.83e-02	1.30e-02	2.37e-02	1.10e-02	1.18e-02	1.70e-02
Cr-51	1.94e-04	1.66e-04	2.91e-04	1.53e-04	1.31e-04	1.85e-04
Mn-53	0.00e+00	0.00e+00	0.00e+00	0.00e+00	0.00e+00	0.00e+00
Mn-54	7.36e-03	5.33e-03	9.66e-03	4.54e-03	4.78e-03	6.86e-03
Fe-55	1.52e-13	3.31e-13	5.74e-13	3.89e-13	1.89e-13	2.67e-13
Fe-59	1.10e-02	7.71e-03	1.42e-02	6.52e-03	7.03e-03	1.02e-02
Co-56	3.29e-02	2.30e-02	4.24e-02	1.95e-02	2.09e-02	3.07e-02
Co-57	1.14e-04	2.44e-04	4.24e-04	2.86e-04	1.41e-04	1.99e-04
Co-58	8.36e-03	6.14e-03	1.11e-02	5.25e-03	5.46e-03	7.83e-03
Co-60	2.35e-02	1.64e-02	3.01e-02	1.38e-02	1.50e-02	2.18e-02
Ni-59	1.21e-07	9.56e-08	1.70e-07	8.35e-08	8.20e-08	1.16e-07
Ni-63	2.51e-14	1.54e-11	2.92e-11	1.86e-11	1.22e-11	2.43e-11
Zn-65	5.33e-03	3.75e-03	6.87e-03	3.18e-03	3.41e-03	4.94e-03
As-73	3.91e-09	9.98e-07	1.85e-06	1.50e-06	4.58e-07	7.58e-07
Se-75	1.63e-03	1.60e-03	2.80e-03	1.55e-03	1.19e-03	1.68e-03
Sr-85	3.73e-03	2.93e-03	5.21e-03	2.56e-03	2.52e-03	3.58e-03
Sr-89	2.65e-05	1.61e-05	2.82e-05	1.27e-05	1.96e-05	2.78e-05
Sr-90	8.66e-05	4.77e-05	8.44e-05	3.64e-05	6.14e-05	8.73e-05
Y-91	6.20e-05	4.04e-05	7.29e-05	3.32e-05	4.24e-05	6.09e-05
Zr-93	9.13e-14	1.88e-11	3.57e-11	2.27e-11	1.50e-11	2.93e-11
Zr-95	6.30e-03	4.63e-03	8.35e-03	3.96e-03	4.12e-03	5.90e-03
Nb-93m	1.95e-18	1.86e-12	3.37e-12	2.56e-12	7.26e-13	2.15e-12
Nb-94	1.36e-02	9.89e-03	1.79e-02	8.45e-03	8.83e-03	1.27e-02
Nb-95	6.63e-03	4.84e-03	8.75e-03	4.14e-03	4.32e-03	6.19e-03
Mo-93	0.00e+00	3.52e-12	5.72e-12	4.24e-12	3.49e-13	1.64e-12
Tc-97	0.00e+00	1.20e-11	2.01e-11	1.55e-11	2.03e-12	9.31e-12
Tc-97m	6.46e-08	3.65e-07	6.41e-07	4.70e-07	1.91e-07	2.77e-07
Tc-99	6.14e-08	9.99e-08	1.76e-07	9.82e-08	9.42e-08	1.37e-07
Ru-103	3.73e-03	2.94e-03	5.22e-03	2.57e-03	2.52e-03	3.58e-03
Ru-106	1.89e-03	1.38e-03	2.47e-03	1.18e-03	1.26e-03	1.80e-03
Ag-108m	1.30e-02	9.82e-03	1.76e-02	8.51e-03	8.56e-03	1.22e-02
Ag-110m	2.41e-02	1.74e-02	3.15e-02	1.48e-02	1.56e-02	2.25e-02
Cd-109	3.29e-07	2.99e-06	5.28e-06	3.99e-06	1.51e-06	2.21e-06
Sn-113	1.76e-03	1.44e-03	2.53e-03	1.29e-03	1.18e-03	1.67e-03
Sb-124	1.67e-02	1.19e-02	2.17e-02	1.01e-02	1.07e-02	1.56e-02
Sb-125	3.18e-03	2.48e-03	4.41e-03	2.18e-03	2.12e-03	3.02e-03
Te-123m	2.75e-04	3.92e-04	6.79e-04	4.26e-04	2.47e-04	3.47e-04
Te-127m	3.51e-05	2.87e-05	5.05e-05	2.57e-05	2.40e-05	3.41e-05
I-125	2.27e-12	1.28e-07	2.46e-07	2.00e-07	6.00e-08	1.52e-07
I-129	7.72e-10	2.34e-07	4.50e-07	3.63e-07	1.10e-07	2.38e-07
I-131	2.60e-03	2.12e-03	3.74e-03	1.91e-03	1.74e-03	2.47e-03
Cs-134	1.31e-02	9.74e-03	1.75e-02	8.36e-03	8.62e-03	1.23e-02
Cs-135	3.56e-08	6.58e-08	1.16e-07	6.57e-08	6.11e-08	8.90e-08
Cs-137	4.68e-03	3.50e-03	6.28e-03	3.01e-03	3.08e-03	4.41e-03
Ba-133	2.12e-03	1.81e-03	3.17e-03	1.66e-03	1.44e-03	2.03e-03
Ce-139	2.99e-04	4.07e-04	7.04e-04	4.35e-04	2.61e-04	3.66e-04
Ce-141	1.13e-04	1.82e-04	3.16e-04	2.04e-04	1.11e-04	1.55e-04
Ce-144	4.37e-04	3.00e-04	5.43e-04	2.56e-04	2.95e-04	4.27e-04
Pm-147	1.00e-08	2.67e-08	4.72e-08	2.88e-08	2.15e-08	3.17e-08

Table C.85 Effective dose coefficients for external exposure in copper scenarios—part 2 (:Sv/h per Bq/g)

Nuclide	Scrap truck	Dust truck		Slag truck	Truck loaded with metal product	
		Driver's seat	Sleeper		Driver's seat	Sleeper
Sm-151	1.60e-13	4.23e-11	8.00e-11	5.10e-11	3.35e-11	6.35e-11
Eu-152	9.80e-03	7.07e-03	1.29e-02	6.06e-03	6.32e-03	9.15e-03
Eu-154	9.63e-03	6.91e-03	1.26e-02	5.91e-03	6.22e-03	9.00e-03
Eu-155	1.10e-05	5.72e-05	1.01e-04	7.40e-05	2.97e-05	4.30e-05
Gd-153	1.44e-05	7.05e-05	1.24e-04	9.10e-05	3.69e-05	5.35e-05
Tb-160	9.66e-03	6.97e-03	1.27e-02	5.97e-03	6.24e-03	9.01e-03
Tm-170	5.10e-06	5.59e-06	9.85e-06	5.79e-06	5.08e-06	7.28e-06
Tm-171	1.25e-09	1.31e-07	2.40e-07	1.94e-07	6.06e-08	9.80e-08
Ta-182	1.10e-02	7.82e-03	1.43e-02	6.67e-03	7.07e-03	1.03e-02
W-181	1.83e-07	1.03e-05	1.89e-05	1.52e-05	4.82e-06	7.68e-06
W-185	2.60e-07	3.25e-07	5.69e-07	3.18e-07	3.03e-07	4.33e-07
Os-185	5.39e-03	4.03e-03	7.24e-03	3.47e-03	3.55e-03	5.07e-03
Ir-192	5.38e-03	4.46e-03	7.85e-03	4.02e-03	3.64e-03	5.15e-03
Tl-204	2.42e-06	2.47e-06	4.34e-06	2.46e-06	2.37e-06	3.39e-06
Pb-210	9.13e-06	6.23e-06	1.09e-05	5.22e-06	7.25e-06	1.03e-05
Bi-207	1.29e-02	9.38e-03	1.70e-02	8.03e-03	8.38e-03	1.21e-02
Po-210	8.51e-08	6.18e-08	1.12e-07	5.28e-08	5.53e-08	7.94e-08
Ra-226	1.51e-02	1.08e-02	1.98e-02	9.26e-03	9.71e-03	1.41e-02
Ra-228	7.42e-03	5.37e-03	9.77e-03	4.60e-03	4.80e-03	6.93e-03
Ac-227	2.14e-03	1.89e-03	3.31e-03	1.75e-03	1.49e-03	2.12e-03
Th-228	1.26e-02	8.95e-03	1.65e-02	7.64e-03	8.02e-03	1.19e-02
Th-229	1.53e-03	1.31e-03	2.33e-03	1.21e-03	1.07e-03	1.53e-03
Th-230	3.05e-07	5.00e-07	8.76e-07	5.71e-07	3.10e-07	4.43e-07
Th-232	4.43e-08	1.38e-07	2.44e-07	1.76e-07	7.42e-08	1.09e-07
Pa-231	1.74e-04	1.55e-04	2.70e-04	1.45e-04	1.20e-04	1.69e-04
U-232	2.01e-07	3.29e-07	5.76e-07	3.74e-07	2.04e-07	2.91e-07
U-233	6.02e-07	6.56e-07	1.15e-06	6.62e-07	4.68e-07	6.62e-07
U-234	4.19e-08	1.16e-07	2.03e-07	1.42e-07	6.40e-08	9.17e-08
U-235	4.14e-04	5.38e-04	9.33e-04	5.64e-04	3.56e-04	5.02e-04
U-236	1.28e-08	4.52e-08	7.94e-08	5.70e-08	2.42e-08	3.50e-08
U-238	2.24e-04	1.57e-04	2.84e-04	1.35e-04	1.52e-04	2.19e-04
Np-237	1.07e-03	9.80e-04	1.71e-03	9.28e-04	7.52e-04	1.06e-03
Pu-236	3.26e-08	4.57e-08	8.10e-08	5.02e-08	3.09e-08	4.44e-08
Pu-238	7.17e-09	1.66e-08	2.93e-08	2.01e-08	9.69e-09	1.40e-08
Pu-239	1.88e-07	1.88e-07	3.30e-07	1.84e-07	1.41e-07	2.00e-07
Pu-240	5.20e-09	1.51e-08	2.66e-08	1.88e-08	8.41e-09	1.23e-08
Pu-241	8.63e-10	2.36e-09	4.11e-09	2.87e-09	1.31e-09	1.86e-09
Pu-242	4.28e-09	1.48e-08	2.60e-08	1.86e-08	7.98e-09	1.16e-08
Pu-244	2.68e-03	1.99e-03	3.59e-03	1.72e-03	1.76e-03	2.53e-03
Am-241	1.38e-07	6.00e-06	1.10e-05	8.84e-06	2.81e-06	4.47e-06
Am-242m	3.31e-05	3.89e-05	6.95e-05	4.07e-05	2.83e-05	4.07e-05
Am-243	4.72e-04	5.68e-04	9.91e-04	5.90e-04	3.92e-04	5.55e-04
Cm-242	1.94e-08	2.07e-08	3.68e-08	2.10e-08	1.54e-08	2.21e-08
Cm-243	3.66e-04	4.09e-04	7.12e-04	4.13e-04	2.89e-04	4.08e-04
Cm-244	1.70e-08	1.76e-08	3.12e-08	1.76e-08	1.32e-08	1.89e-08
Cm-245	7.96e-05	1.76e-04	3.06e-04	2.07e-04	1.02e-04	1.44e-04
Cm-246	7.03e-13	8.02e-10	1.52e-09	1.23e-09	3.71e-10	6.77e-10
Cm-247	2.16e-03	1.78e-03	3.13e-03	1.60e-03	1.46e-03	2.06e-03
Cm-248	5.66e-13	6.89e-10	1.31e-09	1.06e-09	3.19e-10	5.85e-10
Bk-249	3.43e-09	3.96e-09	7.01e-09	3.91e-09	3.11e-09	4.56e-09
Cf-248	5.05e-09	2.47e-08	4.35e-08	3.18e-08	1.29e-08	1.87e-08
Cf-249	2.13e-03	1.76e-03	3.09e-03	1.59e-03	1.43e-03	2.02e-03
Cf-250	2.32e-13	3.96e-10	7.52e-10	6.11e-10	1.83e-10	3.57e-10
Cf-251	2.17e-04	3.04e-04	5.28e-04	3.27e-04	1.97e-04	2.79e-04
Cf-252	1.02e-08	2.65e-08	4.63e-08	3.21e-08	1.49e-08	2.13e-08
Cf-254	1.57e-01	1.12e-01	2.04e-01	9.55e-02	1.01e-01	1.46e-01
Es-254	8.12e-03	5.77e-03	1.05e-02	4.90e-03	5.22e-03	7.54e-03

Table C.86 Effective dose equivalent coefficients for aluminum scenarios (:Sv/h per Bq/g)

Nuclide	Scrap pile	Dross pile	Baghouse	Large object	Small object	Scrap truck	Dross truck	Dust truck	Truck: ingots	Engine block	Cooking pot
H-3	0.00e+00	0.00e+00	0.00e+00	0.00e+00	0.00e+00	0.00e+00	0.00e+00	0.00e+00	0.00e+00	0.00e+00	0.00e+00
C-14	1.32e-07	1.04e-07	4.32e-08	1.06e-08	7.71e-10	1.03e-09	1.15e-08	8.32e-09	7.47e-09	7.82e-09	2.36e-09
Na-22	1.03e-01	1.11e-01	1.68e-02	3.09e-03	2.45e-04	2.41e-02	1.80e-02	1.86e-02	9.37e-03	5.69e-03	4.31e-04
P-32	1.37e-04	1.28e-04	1.67e-05	6.12e-06	4.77e-07	2.29e-05	2.22e-05	1.86e-05	1.32e-05	1.06e-05	9.55e-07
S-35	1.45e-07	1.15e-07	4.53e-08	1.15e-08	8.36e-10	1.40e-09	1.31e-08	9.53e-09	8.46e-09	8.92e-09	2.52e-09
Cl-36	2.33e-05	2.18e-05	3.42e-06	1.13e-06	8.75e-08	3.33e-06	3.71e-06	3.24e-06	2.16e-06	1.82e-06	1.84e-07
K-40	7.69e-03	8.54e-03	1.20e-03	2.03e-04	1.61e-05	1.84e-03	1.32e-03	1.36e-03	6.66e-04	3.68e-04	2.79e-05
Ca-41	0.00e+00	0.00e+00	0.00e+00	0.00e+00	0.00e+00	0.00e+00	0.00e+00	0.00e+00	0.00e+00	0.00e+00	0.00e+00
Ca-45	6.47e-07	5.34e-07	1.48e-07	4.57e-08	3.40e-09	2.07e-08	7.50e-08	5.62e-08	4.64e-08	4.92e-08	9.08e-09
Sc-46	9.63e-02	1.04e-01	1.57e-02	2.78e-03	2.20e-04	2.29e-02	1.67e-02	1.72e-02	8.61e-03	5.09e-03	3.85e-04
Cr-51	1.33e-03	1.36e-03	2.19e-04	5.11e-05	4.02e-06	2.83e-04	2.43e-04	2.47e-04	1.34e-04	9.64e-05	7.30e-06
Mn-53	0.00e+00	0.00e+00	0.00e+00	0.00e+00	0.00e+00	0.00e+00	0.00e+00	0.00e+00	0.00e+00	0.00e+00	0.00e+00
Mn-54	3.95e-02	4.23e-02	6.53e-03	1.20e-03	9.46e-05	9.31e-03	6.91e-03	7.11e-03	3.60e-03	2.21e-03	1.67e-04
Fe-55	4.69e-12	4.41e-12	7.63e-13	2.41e-13	1.89e-14	4.60e-13	7.92e-13	7.51e-13	4.36e-13	4.20e-13	3.68e-14
Fe-59	5.74e-02	6.28e-02	9.19e-03	1.59e-03	1.26e-04	1.37e-02	9.91e-03	1.02e-02	5.05e-03	2.90e-03	2.20e-04
Co-56	1.72e-01	1.92e-01	2.68e-02	4.57e-03	3.64e-04	4.11e-02	2.97e-02	3.07e-02	1.50e-02	8.34e-03	6.30e-04
Co-57	3.47e-03	3.26e-03	5.69e-04	1.79e-04	1.40e-05	3.34e-04	5.84e-04	5.53e-04	3.21e-04	3.09e-04	2.74e-05
Co-58	4.56e-02	4.86e-02	7.57e-03	1.41e-03	1.12e-04	1.07e-02	8.01e-03	8.24e-03	4.20e-03	2.62e-03	1.98e-04
Co-60	1.21e-01	1.34e-01	1.93e-02	3.31e-03	2.63e-04	2.91e-02	2.10e-02	2.16e-02	1.06e-02	6.03e-03	4.56e-04
Ni-59	7.20e-07	7.52e-07	1.22e-07	2.47e-08	1.95e-09	1.62e-07	1.29e-07	1.32e-07	6.92e-08	4.61e-08	3.49e-09
Ni-63	2.61e-09	1.93e-09	1.77e-09	2.52e-10	1.73e-11	4.50e-14	5.88e-11	4.17e-11	5.83e-11	2.75e-11	7.23e-11
Zn-65	2.79e-02	3.04e-02	4.50e-03	7.87e-04	6.24e-05	6.64e-03	4.82e-03	4.97e-03	2.47e-03	1.44e-03	1.09e-04
As-73	5.37e-05	4.46e-05	2.29e-05	4.32e-06	3.15e-07	2.16e-08	5.25e-06	4.62e-06	3.10e-06	3.45e-06	8.89e-07
Se-75	1.45e-02	1.45e-02	2.36e-03	6.06e-04	4.76e-05	2.64e-03	2.61e-03	2.60e-03	1.44e-03	1.12e-03	8.84e-05
Sr-85	2.21e-02	2.31e-02	3.74e-03	7.56e-04	5.97e-05	4.97e-03	3.94e-03	4.05e-03	2.12e-03	1.41e-03	1.07e-04
Sr-89	1.03e-04	9.66e-05	1.28e-05	4.65e-06	3.62e-07	1.69e-05	1.67e-05	1.41e-05	9.90e-06	7.99e-06	7.28e-07
Sr-90	2.88e-04	2.72e-04	3.49e-05	1.22e-05	9.49e-07	5.20e-05	4.66e-05	3.94e-05	2.76e-05	2.10e-05	1.88e-06
Y-91	2.82e-04	2.92e-04	4.11e-05	9.67e-06	7.61e-07	5.93e-05	4.75e-05	4.56e-05	2.57e-05	1.71e-05	1.42e-06
Zr-93	3.04e-09	2.24e-09	2.07e-09	2.93e-10	2.02e-11	2.02e-13	6.96e-11	4.94e-11	6.80e-11	3.36e-11	8.43e-11
Zr-95	3.43e-02	3.65e-02	5.72e-03	1.07e-03	8.47e-05	8.03e-03	6.03e-03	6.21e-03	3.17e-03	1.98e-03	1.50e-04
Nb-93m	5.52e-07	4.23e-07	9.99e-07	5.88e-08	4.04e-09	9.24e-18	1.26e-11	1.11e-11	2.10e-10	1.09e-12	2.04e-08
Nb-94	7.33e-02	7.84e-02	1.22e-02	2.25e-03	1.78e-04	1.72e-02	1.29e-02	1.32e-02	6.73e-03	4.16e-03	3.15e-04
Nb-95	3.59e-02	3.83e-02	5.97e-03	1.11e-03	8.79e-05	8.42e-03	6.30e-03	6.49e-03	3.31e-03	2.06e-03	1.55e-04
Mo-93	2.98e-06	2.29e-06	5.42e-06	3.18e-07	2.19e-08	0.00e+00	1.63e-11	1.56e-11	1.04e-09	3.01e-16	1.10e-07
Tc-97	4.01e-06	3.08e-06	6.82e-06	4.16e-07	2.85e-08	0.00e+00	8.84e-11	8.33e-11	2.86e-09	1.37e-14	1.41e-07
Tc-97m	1.13e-05	9.66e-06	7.97e-06	8.42e-07	6.13e-08	2.97e-07	1.10e-06	1.01e-06	6.10e-07	6.53e-07	2.08e-07
Tc-99	1.32e-06	1.11e-06	2.69e-07	8.90e-08	6.67e-09	5.84e-08	1.65e-07	1.26e-07	1.01e-07	1.06e-07	1.70e-08
Ru-103	2.22e-02	2.32e-02	3.75e-03	7.63e-04	6.03e-05	4.98e-03	3.97e-03	4.07e-03	2.14e-03	1.43e-03	1.08e-04
Ru-106	1.01e-02	1.06e-02	1.66e-03	3.34e-04	2.64e-05	2.30e-03	1.78e-03	1.81e-03	9.53e-04	6.18e-04	4.73e-05
Ag-108m	7.35e-02	7.74e-02	1.23e-02	2.42e-03	1.91e-04	1.69e-02	1.30e-02	1.34e-02	6.94e-03	4.50e-03	3.41e-04
Ag-110m	1.29e-01	1.39e-01	2.11e-02	3.84e-03	3.04e-04	3.04e-02	2.25e-02	2.32e-02	1.17e-02	7.07e-03	5.35e-04
Cd-109	8.75e-05	7.58e-05	4.25e-05	6.12e-06	4.53e-07	1.88e-06	9.92e-06	9.03e-06	5.54e-06	6.13e-06	1.31e-06
Sn-113	1.12e-02	1.15e-02	1.89e-03	4.09e-04	3.23e-05	2.45e-03	2.01e-03	2.06e-03	1.10e-03	7.65e-04	5.87e-05
Sb-124	8.84e-02	9.69e-02	1.41e-02	2.49e-03	1.98e-04	2.09e-02	1.54e-02	1.59e-02	7.87e-03	4.57e-03	3.45e-04
Sb-125	1.89e-02	1.97e-02	3.21e-03	6.50e-04	5.13e-05	4.23e-03	3.36e-03	3.45e-03	1.81e-03	1.21e-03	9.25e-05
Te-123m	4.50e-03	4.33e-03	7.35e-04	2.13e-04	1.67e-05	6.32e-04	7.90e-04	7.65e-04	4.37e-04	3.82e-04	3.19e-05
Te-127m	2.47e-04	2.47e-04	6.07e-05	1.05e-05	8.05e-07	4.73e-05	4.04e-05	4.07e-05	2.23e-05	1.56e-05	1.79e-06
I-125	8.46e-05	6.64e-05	8.99e-05	7.82e-06	5.32e-07	1.08e-11	1.14e-06	1.01e-06	1.62e-06	1.81e-07	2.17e-06
I-129	6.71e-05	5.32e-05	6.26e-05	6.11e-06	4.19e-07	1.30e-09	1.72e-06	1.52e-06	1.75e-06	5.32e-07	1.61e-06
I-131	1.65e-02	1.70e-02	2.74e-03	6.02e-04	4.74e-05	3.62e-03	2.98e-03	3.04e-03	1.62e-03	1.13e-03	8.57e-05
Cs-134	7.23e-02	7.69e-02	1.21e-02	2.28e-03	1.81e-04	1.68e-02	1.27e-02	1.31e-02	6.72e-03	4.23e-03	3.20e-04
Cs-135	9.41e-07	7.83e-07	2.03e-07	6.49e-08	4.85e-09	3.54e-08	1.13e-07	8.53e-08	6.96e-08	7.34e-08	1.26e-08
Cs-137	2.60e-02	2.75e-02	4.36e-03	8.36e-04	6.60e-05	6.03e-03	4.59e-03	4.72e-03	2.43e-03	1.55e-03	1.17e-04
Ba-133	1.48e-02	1.50e-02	2.56e-03	5.78e-04	4.54e-05	3.05e-03	2.65e-03	2.69e-03	1.45e-03	1.06e-03	8.48e-05
Ce-139	4.57e-03	4.41e-03	7.88e-04	2.16e-04	1.69e-05	6.57e-04	7.98e-04	7.75e-04	4.42e-04	3.80e-04	3.29e-05
Ce-141	2.27e-03	2.16e-03	3.75e-04	1.11e-04	8.70e-06	2.84e-04	3.91e-04	3.76e-04	2.16e-04	1.96e-04	1.69e-05
Ce-144	2.33e-03	2.44e-03	3.58e-04	8.08e-05	6.36e-06	4.69e-04	3.95e-04	3.88e-04	2.10e-04	1.42e-04	1.19e-05
Pm-147	4.60e-07	3.87e-07	1.10e-07	3.19e-08	2.37e-09	1.70e-08	5.52e-08	4.43e-08	3.33e-08	3.47e-08	6.28e-09
Sm-151	9.97e-09	7.56e-09	1.03e-08	9.56e-10	6.56e-11	3.26e-13	1.52e-10	1.08e-10	1.54e-10	8.01e-11	2.83e-10

Table C.86 Effective dose equivalent coefficients for aluminum scenarios (μSv/h per Bq/g)

Nuclide	Scrap pile	Dross pile	Baghouse	Large object	Small object	Scrap truck	Dross truck	Dust truck	Truck: ingots	Engine block	Cooking pot
Eu-152	5.36e-02	5.78e-02	8.74e-03	1.60e-03	1.27e-04	1.24e-02	9.31e-03	9.56e-03	4.81e-03	2.91e-03	2.25e-04
Eu-154	5.22e-02	5.65e-02	8.50e-03	1.54e-03	1.22e-04	1.21e-02	9.05e-03	9.31e-03	4.67e-03	2.81e-03	2.16e-04
Eu-155	1.18e-03	1.06e-03	2.56e-04	7.14e-05	5.48e-06	4.74e-05	1.76e-04	1.62e-04	9.70e-05	1.05e-04	1.20e-05
Gd-153	1.57e-03	1.40e-03	4.23e-04	9.93e-05	7.52e-06	6.07e-05	2.18e-04	2.01e-04	1.22e-04	1.26e-04	1.78e-05
Tb-160	5.25e-02	5.65e-02	8.57e-03	1.57e-03	1.24e-04	1.23e-02	9.14e-03	9.39e-03	4.73e-03	2.87e-03	2.19e-04
Tm-170	8.47e-05	7.48e-05	1.98e-05	5.34e-06	4.05e-07	4.21e-06	1.18e-05	1.03e-05	6.73e-06	7.10e-06	9.46e-07
Tm-171	6.13e-06	5.14e-06	2.40e-06	4.79e-07	3.52e-08	8.90e-09	6.42e-07	5.67e-07	3.73e-07	4.25e-07	9.62e-08
Ta-182	5.94e-02	6.45e-02	9.64e-03	1.72e-03	1.36e-04	1.38e-02	1.02e-02	1.05e-02	5.24e-03	3.11e-03	2.42e-04
W-181	4.37e-04	3.69e-04	1.57e-04	3.33e-05	2.47e-06	9.46e-07	4.91e-05	4.33e-05	2.78e-05	3.32e-05	6.51e-06
W-185	3.85e-06	3.36e-06	7.10e-07	2.36e-07	1.79e-08	2.61e-07	5.42e-07	4.45e-07	3.20e-07	3.22e-07	4.19e-08
Os-185	3.04e-02	3.21e-02	5.18e-03	9.96e-04	7.85e-05	6.93e-03	5.33e-03	5.48e-03	2.82e-03	1.81e-03	1.42e-04
Ir-192	3.50e-02	3.60e-02	5.82e-03	1.29e-03	1.01e-04	7.56e-03	6.32e-03	6.43e-03	3.44e-03	2.41e-03	1.84e-04
Tl-204	3.33e-05	2.93e-05	6.95e-06	2.06e-06	1.57e-07	1.82e-06	4.72e-06	4.02e-06	2.71e-06	2.87e-06	3.59e-07
Pb-210	5.64e-05	5.01e-05	1.35e-05	3.28e-06	2.47e-07	5.92e-06	7.76e-06	6.45e-06	4.68e-06	4.07e-06	6.05e-07
Bi-207	7.06e-02	7.58e-02	1.16e-02	2.15e-03	1.70e-04	1.64e-02	1.23e-02	1.27e-02	6.40e-03	3.93e-03	3.02e-04
Po-210	4.58e-07	4.90e-07	7.61e-08	1.40e-08	1.11e-09	1.08e-07	8.03e-08	8.27e-08	4.20e-08	2.59e-08	1.96e-09
Ra-226	8.16e-02	8.92e-02	1.30e-02	2.36e-03	1.87e-04	1.91e-02	1.42e-02	1.46e-02	7.30e-03	4.31e-03	3.28e-04
Ra-228	4.04e-02	4.35e-02	6.57e-03	1.21e-03	9.59e-05	9.42e-03	7.04e-03	7.24e-03	3.65e-03	2.22e-03	1.69e-04
Ac-227	1.61e-02	1.63e-02	2.71e-03	6.40e-04	5.03e-05	3.12e-03	2.86e-03	2.87e-03	1.56e-03	1.17e-03	9.39e-05
Th-228	6.84e-02	7.68e-02	1.04e-02	1.83e-03	1.46e-04	1.60e-02	1.18e-02	1.22e-02	5.96e-03	3.31e-03	2.54e-04
Th-229	1.14e-02	1.16e-02	1.97e-03	4.46e-04	3.50e-05	2.15e-03	1.99e-03	1.99e-03	1.07e-03	7.89e-04	6.62e-05
Th-230	8.16e-06	7.48e-06	2.16e-06	4.84e-07	3.69e-08	6.32e-07	1.22e-06	1.15e-06	6.76e-07	6.77e-07	8.58e-08
Th-232	3.41e-06	2.99e-06	1.23e-06	2.33e-07	1.75e-08	1.22e-07	4.44e-07	4.05e-07	2.47e-07	2.74e-07	4.56e-08
Pa-231	1.30e-03	1.31e-03	2.25e-04	5.22e-05	4.10e-06	2.60e-04	2.34e-04	2.36e-04	1.29e-04	9.57e-05	7.69e-06
U-232	5.41e-06	4.94e-06	1.84e-06	3.26e-07	2.46e-08	4.44e-07	7.81e-07	7.39e-07	4.33e-07	4.18e-07	6.24e-08
U-233	7.17e-06	6.92e-06	1.69e-06	3.51e-07	2.70e-08	1.02e-06	1.19e-06	1.16e-06	6.55e-07	5.48e-07	5.91e-08
U-234	2.55e-06	2.26e-06	1.21e-06	1.72e-07	1.28e-08	1.33e-07	3.23e-07	3.00e-07	1.80e-07	1.82e-07	3.67e-08
U-235	5.86e-03	5.67e-03	1.08e-03	2.75e-04	2.15e-05	8.37e-04	1.02e-03	9.96e-04	5.65e-04	4.82e-04	4.26e-05
U-236	1.29e-06	1.11e-06	8.77e-07	9.65e-08	7.06e-09	4.60e-08	1.35e-07	1.25e-07	7.61e-08	7.70e-08	2.34e-08
U-238	1.24e-03	1.28e-03	2.05e-04	4.52e-05	3.54e-06	2.44e-04	2.09e-04	2.05e-04	1.11e-04	7.75e-05	6.79e-06
Np-237	8.68e-03	8.69e-03	1.47e-03	3.60e-04	2.83e-05	1.61e-03	1.54e-03	1.54e-03	8.47e-04	6.53e-04	5.32e-05
Pu-236	1.28e-06	1.10e-06	1.16e-06	1.01e-07	7.24e-09	5.95e-08	1.06e-07	1.01e-07	6.01e-08	5.48e-08	2.75e-08
Pu-238	8.27e-07	6.79e-07	9.82e-07	7.34e-08	5.18e-09	1.82e-08	4.62e-08	4.30e-08	2.67e-08	2.53e-08	2.18e-08
Pu-239	2.16e-06	2.06e-06	7.53e-07	1.13e-07	8.55e-09	2.94e-07	3.27e-07	3.22e-07	1.80e-07	1.47e-07	2.20e-08
Pu-240	8.06e-07	6.59e-07	9.40e-07	7.18e-08	5.07e-09	1.52e-08	4.51e-08	4.17e-08	2.62e-08	2.52e-08	2.12e-08
Pu-241	3.84e-08	3.55e-08	6.91e-09	2.11e-09	1.64e-10	2.72e-09	6.21e-09	5.81e-09	3.41e-09	3.46e-09	3.34e-10
Pu-242	7.10e-07	5.85e-07	7.85e-07	6.18e-08	4.38e-09	1.46e-08	4.44e-08	4.11e-08	2.56e-08	2.51e-08	1.79e-08
Pu-244	1.49e-02	1.59e-02	2.47e-03	4.76e-04	3.76e-05	3.43e-03	2.63e-03	2.70e-03	1.39e-03	8.79e-04	6.70e-05
Am-241	2.55e-04	2.16e-04	9.55e-05	1.95e-05	1.44e-06	5.24e-07	2.84e-05	2.51e-05	1.61e-05	1.94e-05	3.86e-06
Am-242m	4.82e-04	4.65e-04	8.98e-05	2.33e-05	1.81e-06	5.44e-05	7.83e-05	7.53e-05	4.23e-05	3.80e-05	3.69e-06
Am-243	6.53e-03	6.28e-03	1.18e-03	3.20e-04	2.49e-05	8.28e-04	1.10e-03	1.07e-03	6.07e-04	5.38e-04	4.98e-05
Cm-242	9.04e-07	7.43e-07	1.13e-06	8.01e-08	5.59e-09	3.06e-08	4.10e-08	3.97e-08	2.40e-08	1.91e-08	2.45e-08
Cm-243	4.18e-03	4.09e-03	7.00e-04	1.90e-04	1.48e-05	6.32e-04	7.33e-04	7.19e-04	4.04e-04	3.37e-04	2.84e-05
Cm-244	7.57e-07	6.23e-07	9.57e-07	6.72e-08	4.69e-09	2.67e-08	3.36e-08	3.26e-08	1.96e-08	1.52e-08	2.07e-08
Cm-245	2.61e-03	2.44e-03	4.54e-04	1.39e-04	1.08e-05	2.21e-04	4.31e-04	4.07e-04	2.37e-04	2.33e-04	2.17e-05
Cm-246	4.86e-07	3.76e-07	7.49e-07	4.92e-08	3.39e-09	3.32e-12	4.95e-09	4.36e-09	3.92e-09	2.80e-09	1.59e-08
Cm-247	1.41e-02	1.44e-02	2.37e-03	5.25e-04	4.14e-05	3.01e-03	2.53e-03	2.58e-03	1.38e-03	9.76e-04	7.55e-05
Cm-248	4.47e-07	3.46e-07	6.93e-07	4.53e-08	3.12e-09	2.67e-12	4.28e-09	3.77e-09	3.45e-09	2.40e-09	1.47e-08
Bk-249	6.30e-08	5.48e-08	1.94e-08	4.23e-09	3.09e-10	5.14e-09	7.16e-09	6.47e-09	4.29e-09	3.59e-09	9.14e-10
Cf-248	1.14e-06	9.48e-07	1.12e-06	9.51e-08	6.75e-09	2.16e-08	7.45e-08	6.88e-08	4.31e-08	4.32e-08	2.64e-08
Cf-249	1.38e-02	1.42e-02	2.30e-03	5.13e-04	4.04e-05	2.99e-03	2.50e-03	2.54e-03	1.36e-03	9.63e-04	7.32e-05
Cf-250	5.58e-07	4.31e-07	8.43e-07	5.58e-08	3.82e-09	1.09e-12	2.64e-09	2.33e-09	3.22e-09	1.30e-09	1.79e-08
Cf-251	3.57e-03	3.43e-03	5.99e-04	1.73e-04	1.35e-05	4.50e-04	6.16e-04	5.95e-04	3.40e-04	3.03e-04	2.62e-05
Cf-252	9.85e-07	8.25e-07	9.30e-07	7.96e-08	5.66e-09	3.03e-08	7.04e-08	6.59e-08	4.05e-08	3.88e-08	2.18e-08
Cf-254	8.33e-01	8.98e-01	1.37e-01	2.46e-02	1.95e-03	1.97e-01	1.45e-01	1.49e-01	7.51e-02	4.52e-02	3.42e-03
Es-254	4.29e-02	4.64e-02	7.01e-03	1.24e-03	9.84e-05	1.02e-02	7.44e-03	7.67e-03	3.83e-03	2.27e-03	1.73e-04

Table C.87 Effective dose coefficients for external exposure in aluminum scenarios (:Sv/h per Bq/g)

Nuclide	Scrap pile	Dross pile	Baghouse	Large object	Small object	Scrap truck	Dross truck	Dust truck	Truck: ingots	Engine block	Cooking pot
H-3	0.00e+00	0.00e+00	0.00e+00	0.00e+00	0.00e+00	0.00e+00	0.00e+00	0.00e+00	0.00e+00	0.00e+00	0.00e+00
C-14	1.24e-07	9.88e-08	3.60e-08	9.94e-09	7.22e-10	9.29e-10	9.43e-09	6.85e-09	6.03e-09	7.48e-09	2.20e-09
Na-22	1.02e-01	1.10e-01	1.64e-02	3.06e-03	2.43e-04	2.26e-02	1.68e-02	1.74e-02	8.73e-03	5.54e-03	4.19e-04
P-32	1.37e-04	1.27e-04	1.59e-05	6.08e-06	4.74e-07	2.12e-05	2.03e-05	1.71e-05	1.21e-05	1.02e-05	9.25e-07
S-35	1.37e-07	1.09e-07	3.81e-08	1.08e-08	7.86e-10	1.27e-09	1.08e-08	7.90e-09	6.88e-09	8.55e-09	2.34e-09
Cl-36	2.32e-05	2.17e-05	3.25e-06	1.12e-06	8.68e-08	3.09e-06	3.38e-06	2.96e-06	1.96e-06	1.77e-06	1.77e-07
K-40	7.67e-03	8.50e-03	1.18e-03	2.02e-04	1.61e-05	1.73e-03	1.24e-03	1.28e-03	6.24e-04	3.59e-04	2.72e-05
Ca-41	0.00e+00	0.00e+00	0.00e+00	0.00e+00	0.00e+00	0.00e+00	0.00e+00	0.00e+00	0.00e+00	0.00e+00	0.00e+00
Ca-45	6.30e-07	5.22e-07	1.30e-07	4.42e-08	3.29e-09	1.89e-08	6.48e-08	4.86e-08	3.96e-08	4.74e-08	8.57e-09
Sc-46	9.56e-02	1.04e-01	1.54e-02	2.75e-03	2.19e-04	2.15e-02	1.56e-02	1.62e-02	8.03e-03	4.96e-03	3.75e-04
Cr-51	1.33e-03	1.35e-03	2.12e-04	5.08e-05	4.00e-06	2.63e-04	2.25e-04	2.28e-04	1.23e-04	9.34e-05	7.11e-06
Mn-53	0.00e+00	0.00e+00	0.00e+00	0.00e+00	0.00e+00	0.00e+00	0.00e+00	0.00e+00	0.00e+00	0.00e+00	0.00e+00
Mn-54	3.91e-02	4.20e-02	6.40e-03	1.18e-03	9.38e-05	8.72e-03	6.45e-03	6.65e-03	3.35e-03	2.14e-03	1.62e-04
Fe-55	4.69e-12	4.40e-12	7.45e-13	2.41e-13	1.89e-14	4.23e-13	7.21e-13	6.84e-13	3.95e-13	4.07e-13	3.58e-14
Fe-59	5.70e-02	6.24e-02	9.04e-03	1.58e-03	1.26e-04	1.28e-02	9.28e-03	9.59e-03	4.72e-03	2.83e-03	2.14e-04
Co-56	1.71e-01	1.91e-01	2.63e-02	4.55e-03	3.63e-04	3.85e-02	2.78e-02	2.88e-02	1.41e-02	8.11e-03	6.14e-04
Co-57	3.47e-03	3.26e-03	5.56e-04	1.79e-04	1.40e-05	3.08e-04	5.31e-04	5.04e-04	2.91e-04	3.00e-04	2.66e-05
Co-58	4.52e-02	4.82e-02	7.41e-03	1.40e-03	1.11e-04	9.98e-03	7.46e-03	7.70e-03	3.91e-03	2.54e-03	1.92e-04
Co-60	1.21e-01	1.33e-01	1.90e-02	3.28e-03	2.62e-04	2.73e-02	1.96e-02	2.03e-02	9.95e-03	5.87e-03	4.44e-04
Ni-59	7.14e-07	7.46e-07	1.18e-07	2.44e-08	1.92e-09	1.51e-07	1.19e-07	1.23e-07	6.42e-08	4.47e-08	3.39e-09
Ni-63	2.12e-09	1.57e-09	1.30e-09	2.04e-10	1.40e-11	3.39e-14	3.94e-11	2.79e-11	3.69e-11	2.54e-11	6.42e-11
Zn-65	2.77e-02	3.02e-02	4.42e-03	7.80e-04	6.21e-05	6.23e-03	4.52e-03	4.66e-03	2.31e-03	1.40e-03	1.06e-04
As-73	5.18e-05	4.33e-05	2.12e-05	4.19e-06	3.05e-07	1.68e-08	4.17e-06	3.66e-06	2.45e-06	3.23e-06	8.32e-07
Se-75	1.45e-02	1.44e-02	2.29e-03	6.04e-04	4.75e-05	2.45e-03	2.40e-03	2.39e-03	1.32e-03	1.09e-03	8.61e-05
Sr-85	2.19e-02	2.29e-02	3.63e-03	7.49e-04	5.90e-05	4.65e-03	3.66e-03	3.77e-03	1.97e-03	1.37e-03	1.04e-04
Sr-89	1.03e-04	9.61e-05	1.22e-05	4.62e-06	3.60e-07	1.57e-05	1.53e-05	1.29e-05	9.04e-06	7.75e-06	7.04e-07
Sr-90	2.86e-04	2.70e-04	3.33e-05	1.20e-05	9.40e-07	4.84e-05	4.29e-05	3.63e-05	2.53e-05	2.04e-05	1.82e-06
Y-91	2.81e-04	2.90e-04	4.00e-05	9.60e-06	7.57e-07	5.55e-05	4.42e-05	4.25e-05	2.38e-05	1.67e-05	1.38e-06
Zr-93	2.46e-09	1.83e-09	1.51e-09	2.37e-10	1.63e-11	1.69e-13	4.73e-11	3.35e-11	4.35e-11	3.11e-11	7.48e-11
Zr-95	3.40e-02	3.62e-02	5.59e-03	1.06e-03	8.39e-05	7.52e-03	5.62e-03	5.80e-03	2.95e-03	1.93e-03	1.46e-04
Nb-93m	3.75e-07	2.88e-07	6.67e-07	4.00e-08	2.75e-09	5.04e-18	6.94e-12	6.16e-12	1.03e-10	9.89e-13	1.68e-08
Nb-94	7.27e-02	7.78e-02	1.19e-02	2.23e-03	1.77e-04	1.61e-02	1.20e-02	1.24e-02	6.27e-03	4.04e-03	3.06e-04
Nb-95	3.56e-02	3.80e-02	5.84e-03	1.10e-03	8.71e-05	7.89e-03	5.88e-03	6.07e-03	3.08e-03	2.00e-03	1.51e-04
Mo-93	2.03e-06	1.56e-06	3.61e-06	2.16e-07	1.49e-08	0.00e+00	1.04e-11	9.90e-12	5.11e-10	2.54e-16	9.10e-08
Tc-97	2.75e-06	2.11e-06	4.54e-06	2.86e-07	1.96e-08	0.00e+00	3.97e-11	3.75e-11	1.23e-09	1.17e-14	1.18e-07
Tc-97m	1.01e-05	8.71e-06	5.74e-06	7.15e-07	5.28e-08	2.70e-07	9.82e-07	9.03e-07	5.40e-07	6.34e-07	1.85e-07
Tc-99	1.30e-06	1.09e-06	2.40e-07	8.67e-08	6.51e-09	5.35e-08	1.45e-07	1.10e-07	8.76e-08	1.02e-07	1.61e-08
Ru-103	2.20e-02	2.30e-02	3.65e-03	7.56e-04	5.96e-05	4.66e-03	3.68e-03	3.79e-03	1.98e-03	1.38e-03	1.05e-04
Ru-106	1.00e-02	1.06e-02	1.61e-03	3.31e-04	2.61e-05	2.15e-03	1.66e-03	1.69e-03	8.85e-04	6.00e-04	4.59e-05
Ag-108m	7.29e-02	7.68e-02	1.20e-02	2.39e-03	1.89e-04	1.58e-02	1.21e-02	1.25e-02	6.45e-03	4.37e-03	3.31e-04
Ag-110m	1.28e-01	1.38e-01	2.07e-02	3.80e-03	3.02e-04	2.85e-02	2.10e-02	2.17e-02	1.09e-02	6.88e-03	5.20e-04
Cd-109	8.26e-05	7.20e-05	3.31e-05	5.63e-06	4.20e-07	1.70e-06	8.77e-06	8.00e-06	4.82e-06	5.97e-06	1.22e-06
Sn-113	1.11e-02	1.14e-02	1.82e-03	4.06e-04	3.19e-05	2.28e-03	1.86e-03	1.91e-03	1.02e-03	7.42e-04	5.70e-05
Sb-124	8.80e-02	9.64e-02	1.38e-02	2.48e-03	1.97e-04	1.97e-02	1.44e-02	1.49e-02	7.36e-03	4.44e-03	3.36e-04
Sb-125	1.87e-02	1.95e-02	3.11e-03	6.43e-04	5.07e-05	3.96e-03	3.12e-03	3.21e-03	1.68e-03	1.17e-03	8.98e-05
Te-123m	4.49e-03	4.32e-03	7.09e-04	2.12e-04	1.66e-05	5.83e-04	7.23e-04	7.01e-04	3.98e-04	3.71e-04	3.11e-05
Te-127m	2.41e-04	2.42e-04	5.34e-05	1.01e-05	7.73e-07	4.41e-05	3.72e-05	3.76e-05	2.04e-05	1.52e-05	1.70e-06
I-125	6.85e-05	5.38e-05	6.61e-05	6.35e-06	4.32e-07	6.54e-12	6.00e-07	5.35e-07	8.66e-07	1.65e-07	1.96e-06
I-129	5.67e-05	4.49e-05	4.79e-05	5.17e-06	3.54e-07	1.13e-09	1.08e-06	9.54e-07	1.07e-06	4.88e-07	1.47e-06
I-131	1.64e-02	1.69e-02	2.66e-03	5.97e-04	4.71e-05	3.38e-03	2.76e-03	2.82e-03	1.50e-03	1.10e-03	8.33e-05
Cs-134	7.17e-02	7.63e-02	1.18e-02	2.26e-03	1.79e-04	1.58e-02	1.19e-02	1.23e-02	6.25e-03	4.11e-03	3.11e-04
Cs-135	9.20e-07	7.67e-07	1.79e-07	6.30e-08	4.71e-09	3.24e-08	9.84e-08	7.43e-08	5.99e-08	7.08e-08	1.20e-08
Cs-137	2.58e-02	2.73e-02	4.25e-03	8.26e-04	6.53e-05	5.64e-03	4.27e-03	4.41e-03	2.26e-03	1.51e-03	1.14e-04
Ba-133	1.47e-02	1.50e-02	2.46e-03	5.74e-04	4.50e-05	2.84e-03	2.45e-03	2.48e-03	1.34e-03	1.02e-03	8.23e-05
Ce-139	4.56e-03	4.40e-03	7.52e-04	2.15e-04	1.68e-05	6.07e-04	7.30e-04	7.10e-04	4.02e-04	3.68e-04	3.19e-05
Ce-141	2.26e-03	2.16e-03	3.62e-04	1.11e-04	8.69e-06	2.62e-04	3.57e-04	3.43e-04	1.96e-04	1.90e-04	1.64e-05
Ce-144	2.33e-03	2.43e-03	3.48e-04	8.03e-05	6.33e-06	4.39e-04	3.67e-04	3.60e-04	1.94e-04	1.38e-04	1.15e-05
Pm-147	4.48e-07	3.78e-07	9.69e-08	3.07e-08	2.29e-09	1.56e-08	4.80e-08	3.87e-08	2.86e-08	3.35e-08	5.93e-09
Sm-151	7.72e-09	5.86e-09	7.15e-09	7.40e-10	5.09e-11	2.60e-13	1.06e-10	7.50e-11	9.61e-11	7.43e-11	2.50e-10

Table C.87 Effective dose coefficients for external exposure in aluminum scenarios (:Sv/h per Bq/g)

Nuclide	Scrap pile	Dross pile	Baghouse	Large object	Small object	Scrap truck	Dross truck	Dust truck	Truck: ingots	Engine block	Cooking pot
Eu-152	5.32e-02	5.75e-02	8.55e-03	1.59e-03	1.26e-04	1.16e-02	8.69e-03	8.95e-03	4.48e-03	2.83e-03	2.19e-04
Eu-154	5.19e-02	5.61e-02	8.33e-03	1.53e-03	1.21e-04	1.14e-02	8.46e-03	8.71e-03	4.35e-03	2.73e-03	2.10e-04
Eu-155	1.18e-03	1.07e-03	2.45e-04	7.14e-05	5.49e-06	4.31e-05	1.57e-04	1.44e-04	8.58e-05	1.02e-04	1.16e-05
Gd-153	1.55e-03	1.38e-03	3.91e-04	9.75e-05	7.39e-06	5.53e-05	1.92e-04	1.77e-04	1.07e-04	1.22e-04	1.70e-05
Tb-160	5.21e-02	5.62e-02	8.40e-03	1.56e-03	1.23e-04	1.15e-02	8.53e-03	8.79e-03	4.41e-03	2.79e-03	2.14e-04
Tm-170	8.46e-05	7.47e-05	1.88e-05	5.32e-06	4.04e-07	3.87e-06	1.04e-05	9.02e-06	5.89e-06	6.87e-06	9.09e-07
Tm-171	5.98e-06	5.04e-06	2.23e-06	4.69e-07	3.44e-08	7.48e-09	5.21e-07	4.59e-07	3.00e-07	4.03e-07	9.06e-08
Ta-182	5.90e-02	6.42e-02	9.47e-03	1.71e-03	1.36e-04	1.29e-02	9.57e-03	9.85e-03	4.89e-03	3.03e-03	2.35e-04
W-181	4.31e-04	3.65e-04	1.47e-04	3.30e-05	2.44e-06	8.07e-07	4.03e-05	3.56e-05	2.28e-05	3.17e-05	6.18e-06
W-185	3.82e-06	3.33e-06	6.58e-07	2.32e-07	1.77e-08	2.40e-07	4.81e-07	3.96e-07	2.83e-07	3.11e-07	4.01e-08
Os-185	3.01e-02	3.19e-02	5.05e-03	9.85e-04	7.77e-05	6.48e-03	4.96e-03	5.11e-03	2.62e-03	1.76e-03	1.38e-04
Ir-192	3.48e-02	3.58e-02	5.64e-03	1.28e-03	1.01e-04	7.05e-03	5.84e-03	5.96e-03	3.18e-03	2.34e-03	1.78e-04
Tl-204	3.35e-05	2.95e-05	6.63e-06	2.07e-06	1.58e-07	1.67e-06	4.16e-06	3.55e-06	2.38e-06	2.79e-06	3.48e-07
Pb-210	5.52e-05	4.92e-05	1.23e-05	3.19e-06	2.40e-07	5.49e-06	6.88e-06	5.72e-06	4.13e-06	3.91e-06	5.71e-07
Bi-207	7.01e-02	7.53e-02	1.14e-02	2.13e-03	1.69e-04	1.53e-02	1.15e-02	1.18e-02	5.96e-03	3.82e-03	2.94e-04
Po-210	4.54e-07	4.86e-07	7.44e-08	1.39e-08	1.10e-09	1.01e-07	7.49e-08	7.73e-08	3.91e-08	2.52e-08	1.90e-09
Ra-226	8.13e-02	8.87e-02	1.27e-02	2.34e-03	1.86e-04	1.79e-02	1.33e-02	1.37e-02	6.81e-03	4.20e-03	3.19e-04
Ra-228	4.01e-02	4.32e-02	6.44e-03	1.20e-03	9.53e-05	8.82e-03	6.57e-03	6.77e-03	3.40e-03	2.16e-03	1.65e-04
Ac-227	1.60e-02	1.62e-02	2.63e-03	6.38e-04	5.01e-05	2.90e-03	2.64e-03	2.65e-03	1.44e-03	1.13e-03	9.14e-05
Th-228	6.83e-02	7.65e-02	1.02e-02	1.82e-03	1.46e-04	1.49e-02	1.10e-02	1.14e-02	5.57e-03	3.22e-03	2.47e-04
Th-229	1.14e-02	1.16e-02	1.90e-03	4.44e-04	3.48e-05	2.01e-03	1.83e-03	1.84e-03	9.85e-04	7.66e-04	6.43e-05
Th-230	8.14e-06	7.46e-06	1.97e-06	4.80e-07	3.67e-08	5.82e-07	1.09e-06	1.03e-06	5.99e-07	6.56e-07	8.20e-08
Th-232	3.36e-06	2.96e-06	1.08e-06	2.28e-07	1.71e-08	1.12e-07	3.85e-07	3.52e-07	2.13e-07	2.65e-07	4.28e-08
Pa-231	1.30e-03	1.31e-03	2.15e-04	5.19e-05	4.07e-06	2.41e-04	2.16e-04	2.18e-04	1.18e-04	9.28e-05	7.46e-06
U-232	5.26e-06	4.83e-06	1.55e-06	3.11e-07	2.36e-08	4.09e-07	6.98e-07	6.62e-07	3.85e-07	4.04e-07	5.80e-08
U-233	7.08e-06	6.85e-06	1.51e-06	3.42e-07	2.64e-08	9.44e-07	1.08e-06	1.06e-06	5.95e-07	5.31e-07	5.61e-08
U-234	2.42e-06	2.16e-06	9.64e-07	1.59e-07	1.19e-08	1.22e-07	2.86e-07	2.66e-07	1.58e-07	1.76e-07	3.33e-08
U-235	5.84e-03	5.65e-03	1.01e-03	2.73e-04	2.14e-05	7.71e-04	9.34e-04	9.12e-04	5.14e-04	4.67e-04	4.11e-05
U-236	1.17e-06	1.02e-06	6.65e-07	8.45e-08	6.23e-09	4.21e-08	1.18e-07	1.09e-07	6.62e-08	7.40e-08	2.06e-08
U-238	1.24e-03	1.28e-03	1.99e-04	4.49e-05	3.53e-06	2.28e-04	1.93e-04	1.91e-04	1.03e-04	7.53e-05	6.59e-06
Np-237	8.65e-03	8.66e-03	1.42e-03	3.59e-04	2.82e-05	1.49e-03	1.42e-03	1.42e-03	7.77e-04	6.33e-04	5.18e-05
Pu-236	1.10e-06	9.59e-07	8.38e-07	8.25e-08	5.97e-09	5.52e-08	9.39e-08	8.93e-08	5.24e-08	5.27e-08	2.38e-08
Pu-238	6.69e-07	5.58e-07	6.87e-07	5.67e-08	4.04e-09	1.67e-08	4.04e-08	3.77e-08	2.29e-08	2.44e-08	1.86e-08
Pu-239	2.08e-06	2.00e-06	6.15e-07	1.05e-07	8.02e-09	2.73e-07	2.98e-07	2.94e-07	1.63e-07	1.43e-07	2.02e-08
Pu-240	6.55e-07	5.43e-07	6.61e-07	5.59e-08	3.98e-09	1.40e-08	3.90e-08	3.61e-08	2.22e-08	2.42e-08	1.81e-08
Pu-241	3.85e-08	3.56e-08	6.70e-09	2.12e-09	1.65e-10	2.49e-09	5.60e-09	5.25e-09	3.06e-09	3.36e-09	3.25e-10
Pu-242	5.85e-07	4.89e-07	5.54e-07	4.87e-08	3.48e-09	1.34e-08	3.87e-08	3.58e-08	2.19e-08	2.41e-08	1.53e-08
Pu-244	1.48e-02	1.58e-02	2.41e-03	4.72e-04	3.73e-05	3.21e-03	2.45e-03	2.52e-03	1.29e-03	8.54e-04	6.51e-05
Am-241	2.51e-04	2.13e-04	8.82e-05	1.92e-05	1.42e-06	4.47e-07	2.34e-05	2.07e-05	1.32e-05	1.85e-05	3.65e-06
Am-242m	4.80e-04	4.64e-04	8.55e-05	2.31e-05	1.80e-06	5.05e-05	7.14e-05	6.87e-05	3.83e-05	3.69e-05	3.56e-06
Am-243	6.54e-03	6.28e-03	1.14e-03	3.21e-04	2.50e-05	7.65e-04	1.00e-03	9.73e-04	5.50e-04	5.22e-04	4.85e-05
Cm-242	7.10e-07	5.94e-07	7.78e-07	6.02e-08	4.24e-09	2.84e-08	3.64e-08	3.53e-08	2.06e-08	1.84e-08	2.09e-08
Cm-243	4.17e-03	4.08e-03	6.79e-04	1.89e-04	1.48e-05	5.84e-04	6.70e-04	6.59e-04	3.68e-04	3.27e-04	2.76e-05
Cm-244	5.92e-07	4.96e-07	6.60e-07	5.02e-08	3.53e-09	2.49e-08	2.99e-08	2.92e-08	1.69e-08	1.47e-08	1.76e-08
Cm-245	2.62e-03	2.44e-03	4.41e-04	1.39e-04	1.08e-05	2.03e-04	3.90e-04	3.69e-04	2.14e-04	2.26e-04	2.10e-05
Cm-246	3.53e-07	2.75e-07	5.12e-07	3.56e-08	2.45e-09	2.34e-12	3.60e-09	3.16e-09	2.62e-09	2.58e-09	1.35e-08
Cm-247	1.40e-02	1.44e-02	2.30e-03	5.22e-04	4.10e-05	2.80e-03	2.34e-03	2.39e-03	1.27e-03	9.47e-04	7.34e-05
Cm-248	3.25e-07	2.52e-07	4.73e-07	3.27e-08	2.26e-09	1.87e-12	3.10e-09	2.72e-09	2.28e-09	2.21e-09	1.25e-08
Bk-249	5.96e-08	5.22e-08	1.64e-08	3.92e-09	2.88e-10	4.77e-09	6.26e-09	5.73e-09	3.68e-09	3.45e-09	8.47e-10
Cf-248	9.53e-07	8.01e-07	7.89e-07	7.58e-08	5.44e-09	1.97e-08	6.61e-08	6.11e-08	3.71e-08	4.18e-08	2.31e-08
Cf-249	1.37e-02	1.41e-02	2.22e-03	5.09e-04	4.01e-05	2.79e-03	2.31e-03	2.36e-03	1.26e-03	9.33e-04	7.12e-05
Cf-250	4.02e-07	3.11e-07	5.73e-07	4.01e-08	2.75e-09	7.51e-13	1.80e-09	1.58e-09	1.77e-09	1.20e-09	1.54e-08
Cf-251	3.57e-03	3.43e-03	5.80e-04	1.73e-04	1.35e-05	4.15e-04	5.62e-04	5.43e-04	3.09e-04	2.93e-04	2.55e-05
Cf-252	8.28e-07	7.04e-07	6.54e-07	6.37e-08	4.58e-09	2.78e-08	6.29e-08	5.89e-08	3.53e-08	3.76e-08	1.91e-08
Cf-254	8.26e-01	8.91e-01	1.34e-01	2.43e-02	1.93e-03	1.85e-01	1.36e-01	1.40e-01	7.01e-02	4.40e-02	3.33e-03
Es-254	4.26e-02	4.61e-02	6.87e-03	1.23e-03	9.78e-05	9.53e-03	6.96e-03	7.18e-03	3.58e-03	2.21e-03	1.68e-04

Table C.88 Dose coefficients for external exposure in concrete scenarios (:Sv/h per Bq/g)

Nuclide	Effective dose equivalent		Effective dose	
	Concrete pile	Concrete truck	Concrete pile	Concrete truck
H-3	0.00e+00	0.00e+00	0.00e+00	0.00e+00
C-14	1.35e-07	1.56e-08	1.44e-07	1.27e-08
Na-22	1.60e-01	2.55e-02	1.61e-01	2.39e-02
P-32	1.47e-04	2.48e-05	1.48e-04	2.27e-05
S-35	1.49e-07	1.76e-08	1.58e-07	1.45e-08
Cl-36	2.79e-05	4.64e-06	2.81e-05	4.23e-06
K-40	1.21e-02	1.84e-03	1.22e-02	1.73e-03
Ca-41	0.00e+00	0.00e+00	0.00e+00	0.00e+00
Ca-45	6.83e-07	9.58e-08	7.04e-07	8.20e-08
Sc-46	1.49e-01	2.36e-02	1.51e-01	2.21e-02
Cr-51	2.05e-03	3.57e-04	2.06e-03	3.30e-04
Mn-53	0.00e+00	0.00e+00	0.00e+00	0.00e+00
Mn-54	6.08e-02	9.79e-03	6.14e-02	9.18e-03
Fe-55	7.39e-12	1.30e-12	7.40e-12	1.18e-12
Fe-59	8.96e-02	1.39e-02	9.03e-02	1.31e-02
Co-56	2.74e-01	4.15e-02	2.75e-01	3.89e-02
Co-57	5.47e-03	9.56e-04	5.48e-03	8.67e-04
Co-58	7.02e-02	1.14e-02	7.08e-02	1.07e-02
Co-60	1.90e-01	2.94e-02	1.92e-01	2.76e-02
Ni-59	1.10e-06	1.85e-07	1.11e-06	1.72e-07
Ni-63	2.30e-09	8.86e-11	2.84e-09	5.91e-11
Zn-65	4.34e-02	6.79e-03	4.37e-02	6.38e-03
As-73	8.67e-05	1.09e-05	9.00e-05	8.63e-06
Se-75	2.24e-02	3.93e-03	2.25e-02	3.62e-03
Sr-85	3.39e-02	5.68e-03	3.42e-02	5.29e-03
Sr-89	1.13e-04	1.90e-05	1.13e-04	1.74e-05
Sr-90	3.08e-04	5.16e-05	3.11e-04	4.74e-05
Y-91	3.88e-04	6.18e-05	3.91e-04	5.76e-05
Zr-93	2.68e-09	1.04e-10	3.31e-09	7.03e-11
Zr-95	5.27e-02	8.58e-03	5.32e-02	8.03e-03
Nb-93m	6.20e-07	2.48e-11	9.12e-07	1.38e-11
Nb-94	1.13e-01	1.83e-02	1.14e-01	1.71e-02
Nb-95	5.52e-02	8.96e-03	5.57e-02	8.39e-03
Mo-93	3.35e-06	2.66e-11	4.94e-06	1.71e-11
Tc-97	4.56e-06	1.57e-10	6.65e-06	6.98e-11
Tc-97m	1.61e-05	1.91e-06	1.82e-05	1.70e-06
Tc-99	1.41e-06	2.08e-07	1.44e-06	1.80e-07
Ru-103	3.41e-02	5.72e-03	3.43e-02	5.32e-03
Ru-106	1.53e-02	2.51e-03	1.54e-02	2.34e-03
Ag-108m	1.13e-01	1.87e-02	1.14e-01	1.74e-02
Ag-110m	2.00e-01	3.18e-02	2.01e-01	2.99e-02
Cd-109	1.34e-04	1.77e-05	1.43e-04	1.56e-05
Sn-113	1.71e-02	2.93e-03	1.72e-02	2.72e-03
Sb-124	1.39e-01	2.16e-02	1.40e-01	2.02e-02
Sb-125	2.90e-02	4.85e-03	2.92e-02	4.51e-03
Te-123m	7.01e-03	1.24e-03	7.03e-03	1.13e-03
Te-127m	3.70e-04	5.86e-05	3.79e-04	5.40e-05
I-125	1.16e-04	2.56e-06	1.43e-04	1.35e-06
I-129	9.59e-05	3.84e-06	1.14e-04	2.41e-06
I-131	2.53e-02	4.34e-03	2.55e-02	4.02e-03
Cs-134	1.11e-01	1.82e-02	1.12e-01	1.70e-02
Cs-135	9.96e-07	1.43e-07	1.02e-06	1.23e-07
Cs-137	3.99e-02	6.55e-03	4.03e-02	6.13e-03
Ba-133	2.28e-02	3.91e-03	2.29e-02	3.61e-03
Ce-139	7.11e-03	1.25e-03	7.14e-03	1.14e-03
Ce-141	3.54e-03	6.23e-04	3.55e-03	5.68e-04
Ce-144	3.46e-03	5.47e-04	3.48e-03	5.07e-04
Pm-147	5.37e-07	7.77e-08	5.53e-07	6.73e-08

Table C.88 Dose coefficients for external exposure in concrete scenarios (:Sv/h per Bq/g)

Nuclide	Effective dose equivalent		Effective dose	
	Concrete pile	Concrete truck	Concrete pile	Concrete truck
Sm-151	1.06e-08	2.28e-10	1.39e-08	1.57e-10
Eu-152	8.34e-02	1.32e-02	8.40e-02	1.24e-02
Eu-154	8.13e-02	1.28e-02	8.20e-02	1.20e-02
Eu-155	1.90e-03	3.10e-04	1.90e-03	2.74e-04
Gd-153	2.50e-03	3.86e-04	2.54e-03	3.37e-04
Tb-160	8.14e-02	1.30e-02	8.21e-02	1.21e-02
Tm-170	1.24e-04	1.92e-05	1.24e-04	1.67e-05
Tm-171	9.95e-06	1.31e-06	1.02e-05	1.05e-06
Ta-182	9.28e-02	1.45e-02	9.35e-02	1.36e-02
W-181	7.15e-04	9.85e-05	7.27e-04	8.07e-05
W-185	4.65e-06	7.38e-07	4.70e-06	6.52e-07
Os-185	4.68e-02	7.65e-03	4.72e-02	7.14e-03
Ir-192	5.37e-02	9.20e-03	5.40e-02	8.54e-03
Tl-204	4.66e-05	7.33e-06	4.64e-05	6.40e-06
Pb-210	6.77e-05	1.00e-05	6.96e-05	8.71e-06
Bi-207	1.10e-01	1.75e-02	1.10e-01	1.64e-02
Po-210	7.05e-07	1.14e-07	7.12e-07	1.07e-07
Ra-226	1.28e-01	2.00e-02	1.29e-01	1.87e-02
Ra-228	6.27e-02	9.98e-03	6.32e-02	9.35e-03
Ac-227	2.48e-02	4.25e-03	2.49e-02	3.92e-03
Th-228	1.11e-01	1.65e-02	1.11e-01	1.54e-02
Th-229	1.77e-02	2.96e-03	1.78e-02	2.73e-03
Th-230	1.30e-05	2.08e-06	1.31e-05	1.85e-06
Th-232	5.45e-06	8.12e-07	5.55e-06	6.99e-07
Pa-231	2.01e-03	3.47e-04	2.01e-03	3.21e-04
U-232	8.40e-06	1.31e-06	8.65e-06	1.17e-06
U-233	1.11e-05	1.85e-06	1.13e-05	1.68e-06
U-234	3.90e-06	5.61e-07	4.12e-06	4.93e-07
U-235	9.10e-03	1.59e-03	9.14e-03	1.45e-03
U-236	1.90e-06	2.39e-07	2.09e-06	2.07e-07
U-238	1.84e-03	2.94e-04	1.85e-03	2.72e-04
Np-237	1.34e-02	2.32e-03	1.35e-02	2.13e-03
Pu-236	1.79e-06	1.81e-07	2.09e-06	1.58e-07
Pu-238	1.09e-06	8.11e-08	1.36e-06	7.01e-08
Pu-239	3.27e-06	5.09e-07	3.40e-06	4.62e-07
Pu-240	1.07e-06	8.08e-08	1.32e-06	6.90e-08
Pu-241	6.11e-08	1.04e-08	6.11e-08	9.39e-09
Pu-242	9.57e-07	7.90e-08	1.16e-06	6.81e-08
Pu-244	2.30e-02	3.74e-03	2.32e-02	3.50e-03
Am-241	4.16e-04	5.71e-05	4.24e-04	4.68e-05
Am-242m	7.56e-04	1.25e-04	7.61e-04	1.14e-04
Am-243	1.03e-02	1.76e-03	1.03e-02	1.59e-03
Cm-242	1.16e-06	6.77e-08	1.48e-06	5.93e-08
Cm-243	6.51e-03	1.13e-03	6.52e-03	1.04e-03
Cm-244	9.67e-07	5.45e-08	1.24e-06	4.81e-08
Cm-245	4.14e-03	7.14e-04	4.14e-03	6.44e-04
Cm-246	5.88e-07	1.08e-08	8.08e-07	7.83e-09
Cm-247	2.16e-02	3.70e-03	2.17e-02	3.43e-03
Cm-248	5.40e-07	9.34e-09	7.44e-07	6.76e-09
Bk-249	7.68e-08	1.04e-08	8.07e-08	9.14e-09
Cf-248	1.56e-06	1.30e-07	1.88e-06	1.15e-07
Cf-249	2.12e-02	3.65e-03	2.13e-02	3.38e-03
Cf-250	6.69e-07	5.79e-09	9.28e-07	3.93e-09
Cf-251	5.59e-03	9.77e-04	5.60e-03	8.89e-04
Cf-252	1.35e-06	1.20e-07	1.61e-06	1.06e-07
Cf-254	1.29e+00	2.05e-01	1.30e+00	1.93e-01
Es-254	6.64e-02	1.05e-02	6.71e-02	9.86e-03

References

American Nuclear Society. 1987. "Calculation and Measurement of Direct and Scattered Gamma Radiation from LWR Nuclear Power Plants,"ANSI/ANS 6.6.1-1987. Author.

Anigstein, R., et al. 2001. "Technical Support Document: Potential Recycling of Scrap Metal from Nuclear Facilities, Part I: Radiological Assessment of Exposed Individuals." Washington, DC: U.S. Environmental Protection Agency, Office of Radiation and Indoor Air. http://www.epa.gov/radiation/cleanmetals/docs/tsd/scrap_tsd_041802_vol1cvr_toc1.pdf (August 12, 2002).

Brezonick, M. 1999. "New Technology Means Greater Precision, Capabilities for Engine Castings Manufacturer." *Diesel Progress, North American Edition*, March 1999.

Briesmeister, J. F. (Ed.) 2000. "MCNP - A General Monte Carlo N-Particle Transport Code, Version 4C," LA-13709-M. Los Alamos, NM: Los Alamos National Laboratory.

Eckerman, K. F., and J. C. Ryman. 1993. "External Exposure to Radionuclides in Air, Water, and Soil," Federal Guidance Report No. 12, EPA 402-R-93-081. Washington, DC: U.S. Environmental Protection Agency, Office of Radiation and Indoor Air.

Eckerman, K. F. (Oak Ridge National Laboratory). 2002. <eckermankf@ornl.gov> "Re: Electron bremsstrahlung data" July 26, 2002, personal e-mail to Robert Anigstein, SC&A, Inc.

General Motors Corp. (n/d). "2002 Chevrolet Impala." http://www.chevrolet.com/impala/features.htm (March 9, 2002).

GMPartsDirect.com. (n/d). "Chevy 90-Degree V6." http://www.gmpartsdirect.com/performance_parts/store/catalog/Category.jhtml¿CATID=274.html (February 18, 2002)

International Commission on Radiological Protection (ICRP). 1977. "Recommendations of the ICRP," ICRP Publication 26. *Annals of the ICRP, 1*(3). Oxford: Pergamon Press.

International Commission on Radiation Protection (ICRP). 1987. "Data for Use in Protection Against External Radiation," ICRP Publication 51. *Annals of the ICRP, 17* (2/3). Oxford: Pergamon Press.

International Commission on Radiological Protection (ICRP). 1991. "1990 Recommendations of the ICRP," ICRP Publication 60. *Annals of the ICRP, 21*(1-3). Oxford: Pergamon Press.

International Commission on Radiological Protection (ICRP). 1996. "Conversion Coefficients for use in Radiological Protection against External Radiation," ICRP Publication 74. *Annals of the ICRP, 26* (3/4). Tarrytown, NY: Elsevier Science, Inc.

Kenworth Truck Company, a division of PACCAR, Inc. 2001. “T2000," sales brochure. http://www.kenworth.com/brochures/T2000.pdf (March 31, 2002)

Kramer, R., et al. 1982. “The Calculation of Dose from External Photon Exposures Using Reference Human Phantoms and Monte Carlo Methods, Part I: The Male (Adam) and Female (Eva) Adult Mathematical Phantoms,” GSF-Bericht S-885. Munich, Germany: GSF – National Research Center for Environment and Health.

Lide, D. R. (Ed.) 1995. *CRC Handbook of Chemistry and Physics* (76th ed.) Boca Raton, FL: CRC Press.

Logan, S. E. 1993. “Risk Assessment of Options for Disposition of EAF Dust Following a Meltdown Incident of Radioactive Cesium Source in Scrap Steel,” SELA-9301. Santa Fe, NM: S. E. Logan and Associates, Inc. (U.S. Nuclear Regulatory Commission Public Document Room [PDR]: ADAMS Accession Number ML031990418.)

Los Alamos National Laboratory (LANL). 2001. MCNP4C: Monte Carlo N-Particle Transport Code System, RSICC Computer Code Collection [Computer software and manual]. Oak Ridge, TN: Oak Ridge National Laboratory.

McKenzie-Carter, M.A., et al. 1995. “Dose Evaluation of the Disposal of Electric Arc Furnace Dust Contaminated by an Accidental Melting of a Cs-137 Source,” Draft Final, SAIC-95/2467&01. Idaho Falls, ID: Science Applications International Corporation.

Nabelssi, B. K. 1993. “Calculations of Dose Equivalent Quantities for High-Energy Neutrons using Homogeneous and Heterogeneous Phantoms,” doctoral dissertation, The University of Texas, Austin.

Snyder, W. S., et al. 1969. “Estimates of Absorbed Fractions for Monoenergetic Photon Sources Uniformly Distributed in Various Organs of a Heterogeneous Phantom,” Medical Internal Radiation Dose (MIRD) Pamphlet No. 5. New York: Society of Nuclear Medicine.

Snyder, W. S., M. R. Ford, and G. G. Warner. 1978. “Estimates of Specific Absorbed Fractions for Photon Sources Uniformly Distributed in Various Organs of a Heterogeneous Phantom,” Medical Internal Radiation Dose (MIRD) Pamphlet No. 5, Revised. New York: Society of Nuclear Medicine.

South St. Paul Steel Supply Co., Inc. 2004. “Hot Rolled Steel Products.” South St. Paul, MN. http://www.sspss.com (May 6, 2004).

Storm, E., and H. I. Israel. 1970. “Photon Cross Sections from 1 keV to 100 MeV for Elements Z = 1 to Z = 100.” *Nuclear Data Tables, A7*, 565-681.

Tanner, J. E. 1988. “The Effect of Gender and Remainder on Effective Dose Equivalent,” *Trans. Amer. Nucl. Soc. 57*, 217–218.

Tokai Research Establishment, JAERI. 2001. DECDC 1.0: Nuclear Decay Data Files for Radiation Dosimetry Calculations, DLC-213, RSICC Data Library Collection [Computer software and manual]. Oak Ridge, TN: Oak Ridge National Laboratory.

Yielding, B. (Heil Trailer International). 2002. <byielding@Heiltrailer.com> "RE: FW: PDF" March 18, 2002, personal e-mail to Robert Anigstein, SC&A, Inc.

Zankl, M., N. Petoussi, and G. Drexler. 1992. "Effective Dose and Effective Dose Equivalent-The Impact of the New ICRP Definitions for External Photon Irradiation," *Health Physics 62*(5), 395–399.

APPENDIX D

MIXING OF CLEARED MATERIALS

CONTENTS

Page

Appendix D Mixing of Cleared Materials D-1
D.1 Mixing Factors D-1

D.2 Calculation of Mixing Factors for Steel Scrap D-2
D.2.1 Annual-Average Mixing Factors D-2
D.2.1.1 Disposal in Municipal or Industrial Landfills D-2
D.2.1.2 Scrap Processing D-4
D.2.2 Maximum Single-Heat Mixing Factors D-7

D.3 Calculation of Mixing Factors for Copper Scrap D-8
D.3.1 Processing of Copper Scrap by Scrap Dealers D-9
D.3.2 Fire-Refining of Copper Scrap D-10

D.4 Calculation of Mixing Factors for Aluminum Scrap D-13
D.4.1 Processing of Aluminum Scrap by Scrap Dealers D-13
D.4.2 Secondary Smelter Operations D-14
D.4.2.1 Annual-Average Mixing Factors D-14
D.4.2.2 Maximum Single-Heat Mixing Factors D-15

References D-16

Figure

D.1 Distribution of nonferrous metal scrap dealers D-10

Tables

D.1 Annual waste streams of municipal landfills D-3
D.2 Annual waste streams of industrial landfills D-4
D.3 Annual throughput of ferrous metal scrap dealers D-5
D.4 Annual scrap consumption of BOF mills (tons/y) D-6
D.5 Annual scrap consumption of EAF mills D-6
D.6 Annual scrap consumption of iron and steel foundries D-7
D.7 Annual capacities of U.S. secondary copper fire refineries D-10
D.8 Reactor dismantlement schedule D-12
D.9 Annual number of reactors undergoing dismantlement D-13
D.10 Annual capacities of U.S. secondary aluminum smelters D-14
D.11 Sizes of reverberatory furnaces at U.S. secondary aluminum smelters D-15

D MIXING OF CLEARED MATERIALS

The goal of the analysis of clearance of material is to develop realistic exposure scenarios based on actual industry practices. The mixing of scrap metal and concrete, cleared from nuclear facilities, with similar materials from non-nuclear facilities, could significantly decrease the concentrations of residually radioactive materials in the process streams. In the present analysis, various degrees of mixing are assumed to occur at each stage of the processing or disposal of cleared materials. For example, steel scrap from a nuclear facility is transported to a scrap dealer, where it is mixed with scrap from other sources. Scrap melted in a steel mill or foundry is charged to the furnace together with metal from other sources.

Mixing of cleared material reduces the radiological impacts from recycling and disposal in a linear fashion (i.e., a 10-fold mixing would result in a 10-fold reduction in the normalized doses from a given scenario).

D.1 Mixing Factors

A mixing factor is defined as the ratio of cleared material to the total amount of material in a given process stream. Two general types of mixing factors are developed for use with different exposure scenarios. For situations in which an individual is exposed to a steady stream of residually radioactive material, the radiological assessment is based on annual-average radionuclide concentrations. Although the activity levels would vary among individual batches of material, the radiation dose to that individual during the assessment period (one year in most cases) would be the same as if the radionuclide concentrations were constant. These concentrations in turn depend on the average fraction of cleared materials in a given process stream. This fraction is called the “annual-average” mixing factor.

In most of the product-use scenarios in the present analysis, an individual is exposed to a single product over an extended period of time. An example would be the owner-operator of a commercial truck with a diesel engine block made from cast iron. The cast iron is assumed to be made from iron and steel scrap, including scrap from nuclear facilities. Since a diesel engine would be in use for more than one year, this individual would be exposed to a single source of activity, which would vary only with the decay of radionuclides initially present in the cast iron, and the ingrowth of the radioactive progenies of these nuclides, as discussed in Appendix E of the present report. In such a case, the annual-average mixing factor is no longer applicable. Due to the random variation of scrap sources used by a given iron foundry, some furnace heats would include scrap with a higher-than-average mixing factor, while others would have lower-than-average fractions of cleared scrap. A “maximum single-heat” mixing factor is defined as the highest likely fraction of cleared scrap in any *single* heat over the course of one year at a given melt shop. The same concept applies to the analysis of other products made from cleared materials.

D.2 Calculation of Mixing Factors for Steel Scrap

The sources of cleared steel scrap are discussed in Section 3.2.1 of the main report. The mixing factors for the various process streams are discussed in the following sections.

D.2.1 Annual-Average Mixing Factors

In calculating annual-average mixing factors, we assume that, once they leave the nuclear facility, cleared materials would be indistinguishable from similar materials from non-nuclear sources. The same assumption applies to cleared materials that have been processed or recycled. Consequently, these materials are assumed to join the nationwide stream of similar materials, whether it be steel scrap destined for recycling at steel mills or foundries, or scrap, slag, dust, or other by-products destined for landfill disposal or other uses.

We assume that all the material cleared in one year from a given nuclear facility is conveyed to a single facility for processing, disposal, or recycling. Each facility is selected by random sampling from a weighted distribution of such facilities (e.g., scrap processors, landfills, or steel mills and foundries). The construction of these distributions is discussed in more detail in the following sections.

D.2.1.1 Disposal in Municipal or Industrial Landfills

As discussed in Section 3.4.2.3 of the main report, the analyses of the landfill disposal of cleared scrap, slag, or BOF/foundry dust include the assumption that one year's material from a given nuclear power plant or melt shop would be emplaced in a single landfill, commingled with other wastes received at that landfill over the course of a year. The mixing factor for the scrap or by-product is determined by dividing the quantity of such material by the annual quantity of wastes received by a given landfill.[1] A discrete distribution[2] of waste streams is constructed from data on 814 municipal solid waste (MSW) landfills in 10 states: California, Illinois, Michigan, Nebraska, New Jersey, New York, North Carolina, Ohio, South Carolina, and Wisconsin. A second discrete distribution, used to determine mixing factors for scrap or dust disposed of in industrial landfills, is constructed using data on 98 industrial and construction and demolition (C&D) landfills in 4 states: Michigan, New Jersey, North Carolina and Ohio.[3]

The first step in constructing the distribution is ranking all the landfills of a given type (i.e., MSW or industrial) in order of annual quantity of waste received. The landfills are then grouped by waste stream interval—the first column of Table D.1 shows the upper bound of each interval

[1] It is assumed that scrap or furnace by-products would be sent only to landfills with waste streams at least equal to the mass of materials requiring disposal.

[2] See Section B.2.6 for a discussion of custom distributions constructed for the present analysis.

[3] Landfill data for the other six states did not distinguish between municipal and industrial landfills. Landfills not explicitly identified as industrial or C&D were classified as MSW.

for the case of municipal landfills. The number of landfills in each interval is listed in the second column, while the third column shows the average waste stream of these landfills. The total waste stream of all the landfills in the interval is listed in the fourth column, while the fifth column lists the cumulative waste stream of each successive interval. The last column lists the cumulative waste stream as a percentage of the total waste stream of all the landfills listed in the table. These last values constitute a cumulative distribution function (CDF) of the annual waste streams of MSW landfills. Similar data for industrial landfills are shown in Table D.2.

Table D.1 Annual waste streams of municipal landfills (tons)

Waste stream interval[a]	No. landfills	Average waste stream	Total waste per interval	Cumulative waste stream	CDF (%)
100	10	27	267	267	0.00010
250	4	170	679	946	0.00035
500	3	400	1,200	2,146	0.00080
1,000	7	732	5,125	7,271	0.0027
2,500	19	1,743	33,113	40,384	0.0150
5,000	17	3,635	61,798	102,182	0.0379
10,000	24	7,324	175,771	277,953	0.103
25,000	106	17,083	1,810,754	2,088,707	0.775
50,000	104	34,681	3,606,803	5,695,510	2.114
100,000	116	75,678	8,778,685	14,474,194	5.373
125,000	36	111,128	4,000,622	18,474,817	6.858
150,000	39	137,001	5,343,040	23,817,856	8.841
200,000	73	177,376	12,948,475	36,766,331	13.648
300,000	88	245,263	21,583,153	58,349,485	21.659
500,000	70	380,242	26,616,958	84,966,442	31.540
1,000,000	51	706,171	36,014,725	120,981,167	44.908
2,000,000	29	1,311,179	38,024,193	159,005,360	59.023
3,000,000	9	2,462,894	22,166,050	181,171,410	67.251
4,000,000	3	3,411,066	10,233,197	191,404,607	71.050
5,000,000	2	4,225,619	8,451,237	199,855,844	74.187
6,000,000	1	5,337,441	5,337,441	205,193,285	76.168
7,000,000	1	6,792,024	6,792,024	211,985,309	78.689
25,000,000	1	20,949,781	20,949,781	232,935,090	86.466
40,000,000	1	36,460,691	36,460,691	269,395,781	100.000
Total	814		269,395,781		

[a] Upper bound of interval

The CDFs are used to construct a discrete distribution that is used to generate an array of annual waste streams that serves as an input to the probabilistic calculations. The frequency with which the average annual waste stream of a given interval appears in the array is proportional to the total waste stream of that interval. Thus, the likelihood that a given batch of material would be disposed of in a landfill with a given waste stream depends on the magnitude of that waste

stream and on the number of landfills having waste streams that fall into the same interval. To give a concrete example, Table D.1 lists 88 MSW landfills that receive between 200,000 and 300,000 tons of waste per year. The average waste stream of these landfills is 245,263.1 tons per year, for a total waste stream of 21,583,153 tons per year (245,263.1 × 88 = 21,583,153). This tonnage constitutes 8.01% of the total waste stream of all MSW landfills listed: 269,395,781 tons per year. (The value of 8.01% is the difference between the CDF for the 200,000 – 300,000 ton/y interval and the CDF for the previous interval: 21.66% ! 13.65% = 8.01%). Therefore, in the analysis of the scenarios that model the disposal of scrap metal in an MSW landfill, the scrap cleared in one year is diluted into a total waste stream of 245,263.1 tons in about 8% of the realizations.

Table D.2 Annual waste streams of industrial landfills (tons)

Waste stream interval[a]	No. landfills	Average waste stream	Total waste per interval	Cumulative waste stream	CDF (%)
100	2	2	4	4	0.00005
1,000	4	717	2,870	2,874	0.03529
2,500	2	2243	4,486	7,360	0.09037
5,000	12	3,679	44,150	51,510	0.63248
10,000	11	6785	74,638	126,148	1.54895
25,000	17	17,666	300,314	426,461	5.23645
50,000	18	34,842	627,155	1,053,616	12.93719
100,000	14	72,842	1,019,783	2,073,399	25.45895
125,000	2	107,435	214,871	2,288,270	28.09731
150,000	2	140,158	280,317	2,568,587	31.53928
200,000	5	164,942	824,710	3,393,296	41.66576
300,000	4	235,490	941,960	4,335,257	53.23195
500,000	2	355,795	711,590	5,046,847	61.96946
1,000,000	2	641,939	1,283,879	6,330,726	77.73401
2,000,000	1	1,813,362	1,813,362	8,144,088	100.00000
Total	98		8,144,088		

[a] Upper bound of interval

D.2.1.2 Scrap Processing

In analyzing the scrap handling scenario, we assume that all the steel scrap cleared during the dismantlement of a commercial nuclear power plant during one year is processed by a single scrap dealer.[4] No data on the annual volume of scrap processed by individual dealers could be obtained in the course of the present analysis. However, a 1997 economic census (Bureau of the Census 2000) presents data on sales revenues of ferrous scrap dealers and brokers, listing the number of dealers in each revenue range (e.g., <$100,000/y, $100,000/y – $249,000/y, etc.), as well as the total revenue for dealers in each range. These data are listed in Table D.3. Fenton

[4] It is assumed that the cleared scrap would be consigned only to a dealer whose annual throughput is greater than or equal to the amount of cleared scrap in given realization.

(1998) reported that a total of 52 Mt of ferrous scrap was handled by dealers and brokers in 1997. Dividing the total revenue listed in Table D.3 by the cited throughput of ferrous scrap yields an average price of $340.28/t. These data enable an estimate of the average annual tonnage handled by the individual dealers in each revenue range. A CDF of scrap dealer throughput is constructed in the same manner as is described for the landfills discussed in Section D.2.1.1. This CDF is used to construct a continuous cumulative distribution, rather than a discrete distribution, as was the case for the landfills.[5] Mixing factors are determined by dividing the amount of scrap cleared in one year by the average amount of scrap processed annually by a dealer in a given revenue range.

Table D.3 Annual throughput of ferrous metal scrap dealers (t/y)

Revenue interval[a] ($)	No. dealers	Totals sales ($1,000)	Throughput per interval	Average throughput	Cumulative throughput	CDF (%)
100,000	171	10,084	29,635	173	29,635	0.057
250,000	345	58,769	172,709	501	202,343	0.389
500,000	422	150,767	443,070	1,050	645,414	1.241
1,000,000	488	350,231	1,029,250	2,109	1,674,664	3.221
2,500,000	645	1,027,461	3,019,476	4,681	4,694,140	9.027
5,000,000	371	1,307,336	3,841,966	10,356	8,536,105	16.416
10,000,000	266	1,866,414	5,484,970	20,620	14,021,075	26.964
25,000,000	212	3,248,981	9,548,022	45,038	23,569,097	45.325
>25,000,000	151	9,674,408	28,430,903	188,284	52,000,000	100.000
Total	3,071	17,694,451	52,000,000			

[a] Upper bound of interval

D.2.1.3 Melting and Refining

Similar to the analyses of the landfill disposal and scrap processing scenarios, the analysis of the melting and refining of steel scrap incorporates the assumption that all scrap cleared during one year of dismantlement of a given nuclear power plant would be melted at a single facility.[6] As described in Section 3.2.3 of the main report, the scrap would be melted in one of three types of furnaces. The mixing factors for each of these three furnace types are calculated in the same manner as for the landfills and scrap dealers.

Table D.4 presents the data for BOFs at integrated steel mills, based on the individual mills listed in Table 3.2 of the main report. Table D.5 presents corresponding data on EAFs, while data on iron and steel foundries are presented in Table D.6. The discrete distributions of annual rates of scrap consumption by these different types of facilities are constructed in the same way as the distributions of landfill waste streams described in Section D.2.1.1.

[5] See Note 2 on page D-2.

[6] It is assumed that the cleared scrap would be melted only at a melt shop whose annual capacity is greater than or equal to the amount of cleared scrap in given realization.

Table D.4 Annual scrap consumption of BOF mills (tons/y)

Scrap interval[a]	No. mills	Average scrap use	Total scrap per interval	Cumulative scrap use	CDF (%)	Heats/y
400,000	2	310,800	621,600	621,600	3.78	5,252
500,000	1	414,720	414,720	1,036,320	6.31	5,082
600,000	2	524,105	1,048,211	2,084,531	12.69	4,844
700,000	8	629,743	5,037,946	7,122,476	43.36	5,675
800,000	3	755,435	2,266,304	9,388,781	57.15	5,002
900,000	1	801,600	801,600	10,190,381	62.03	7,591
1,000,000	4	975,229	3,900,915	14,091,296	85.78	7,338
1,100,000	1	1,051,200	1,051,200	15,142,496	92.18	9,955
1,300,000	1	1,284,840	1,284,840	16,427,336	100.00	5,948
Total	23		16,427,336			

[a] Upper bound of interval

Table D.5 Annual scrap consumption of EAF mills (tons/y)

Scrap interval[a]	No. mills	Average scrap use	Total scrap per interval	Cumulative scrap use	CDF (%)	Heats/y
10,000	1	5,730	5,730	5,730	0.01	1,000
25,000	3	21,010	63,030	68,760	0.09	1,044
50,000	10	41,161	411,605	480,365	0.66	1,569
75,000	13	60,385	785,010	1,265,375	1.74	1,996
100,000	4	92,874	371,495	1,636,870	2.25	2,219
200,000	27	145,089	3,917,410	5,554,280	7.62	2,732
300,000	17	262,288	4,458,895	10,013,175	13.74	3,904
400,000	20	345,567	6,911,335	16,924,510	23.22	3,088
500,000	19	459,405	8,728,700	25,653,210	35.19	5,682
600,000	9	553,900	4,985,100	30,638,310	42.03	5,744
700,000	7	648,445	4,539,115	35,177,425	48.26	6,280
800,000	6	740,125	4,440,750	39,618,175	54.35	7,143
900,000	10	826,075	8,260,750	47,878,925	65.69	6,200
1,000,000	5	955,000	4,775,000	52,653,925	72.24	7,305
1,100,000	5	1,050,500	5,252,500	57,906,425	79.44	6,598
1,200,000	6	1,160,325	6,961,950	64,868,375	88.99	7,669
1,300,000	2	1,289,250	2,578,500	67,446,875	92.53	10,800
1,400,000	3	1,337,000	4,011,000	71,457,875	98.03	6,935
1,500,000	1	1,432,500	1,432,500	72,890,375	100.00	8,333
Total	168		72,890,375			

Source: "EAF Roundup" 2001

[a] Upper bound of interval

Table D.6 Annual scrap consumption of iron and steel foundries (tons/y)

Scrap interval[a]	No. mills	Average scrap use	Total scrap per interval	Cumulative scrap use	CDF (%)
100	122	48	5,877	5,877	0.018
250	123	164	20,174	26,051	0.078
500	161	363	58,519	84,570	0.252
1,000	219	698	152,868	237,438	0.707
2,500	277	1,631	451,734	689,172	2.052
5,000	183	3,693	675,791	1,364,962	4.064
10,000	167	7,413	1,237,937	2,602,900	7.750
25,000	192	15,539	2,983,510	5,586,410	16.633
50,000	121	34,510	4,175,725	9,762,135	29.067
75,000	48	60,187	2,888,972	12,651,107	37.668
100,000	33	86,282	2,847,311	15,498,417	46.146
200,000	18	129,869	2,337,643	17,836,060	53.107
300,000	21	233,219	4,897,596	22,733,656	67.689
400,000	6	354,073	2,124,438	24,858,094	74.015
500,000	7	450,970	3,156,792	28,014,886	83.414
600,000	1	563,048	563,048	28,577,934	85.090
1,300,000	4	1,251,873	5,007,491	33,585,425	100.000
Total	1,703		33,585,426		

Source: Jim Maysilles, Metals Group, Emission Standards Division, U.S. Environmental Protection Agency, Research Triangle Park, NC, private communication with Kathleen Behling, SC&A, Inc., September 25, 2001.

[a] Upper bound of interval

D.2.2 Maximum Single-Heat Mixing Factors

As is mentioned in Section 3.7.5 of the main report, the analysis of several of the product use scenarios utilize the maximum single-heat mixing factor. To calculate this mixing factor, we assume that the old scrap charged to the furnace is evenly divided among a number different grades or types of scrap.[7] We further assume that each grade of scrap charged to the furnace is from a separate lot and that the same annual-average mixing factor applies to each of these grades of scrap (i.e., over the course of one year, each grade of scrap comprises the same fraction of cleared scrap). The mixing factor for any given heat is $\frac{i}{n}$, where *n* is the total number of lots of old scrap and *i* is the number of lots that consist of cleared scrap. The following binomial expression denotes the probability that, out of *n* randomly chosen lots charged to a given furnace, *i* lots would consist of cleared scrap:

$$P_{ijn} = \frac{n!}{i!(n-i)!} f_{jm}^{i} (1 - f_{jm})^{n-i} \qquad (0 \# i \# n)$$

P_{ijn} = probability that a given heat melted in furnace *j* contains *i* lots of cleared scrap

[7] As was stated in Section 3.4.2.2 of the main report, each EAF heat consumes 5 – 20 different grades of scrap.

n = total number of lots (= number of grades of scrap) in each heat in furnace *j*

f_{jm} = annual-average mixing factor for furnace *j*

The maximum single heat is defined as that heat, of all the heats produced in one year, that contains the highest fraction of cleared scrap. The probability that no one heat produced in a given year contains more than *k* lots of cleared scrap is:

$$P'_{jkn} = 1 - \left(\sum_{i=0}^{k} P_{ijn} \right)^{N} \qquad (k \# n)$$

P'_{jkn} = probability that no heat melted in furnace *j* in one year contains more than *k* lots of cleared scrap

N = number of heats produced in furnace *j* in one year

This probability distribution is used to select *K*, the maximum number of lots of cleared scrap in any single heat melted in furnace *j* in one year. The maximum single-heat mixing factor is $\frac{K}{n}$.

The number of grades of scrap comprising each heat in a BOF or EAF is assigned a uniform distribution: 5 # *n* # 20. The number of heats per year for each size BOF and EAF is listed in Tables D.4 and D.5, respectively.

As stated in Section 3.4.2.2 of the main report, cupola furnaces producing cast iron can melt a charge consisting of a single grade of scrap. Consequently, it is assumed that the old scrap in the maximum single heat of cast iron is entirely comprised of cleared scrap.

D.3 Calculation of Mixing Factors for Copper Scrap

The sources of cleared copper scrap are discussed in Section 4.2.1 of the main report. The mixing of copper scrap is modeled in the same manner as that of steel scrap, described above. Only those aspects of the analysis that are unique to copper are discussed in this section.

One major difference from the steel analysis is the amount of copper scrap that would be cleared during the dismantlement of a commercial nuclear power plant, the assumed source of cleared materials in the present analysis. As cited in Section 4.2.1, 62 t of copper scrap would be potentially available for clearance.

A second major difference is the number of copper refining facilities that could process the cleared scrap. In the case of steel, there are approximately 1,900 melt shops (including foundries) that are potential consumers of this material. Consequently, it is unlikely that any one facility would receive scrap from more than one nuclear plant during any one year. In the case of copper, four fire refineries together consume 28.6% of old, unalloyed scrap—the principal

form of copper scrap which would be generated by the dismantlement of nuclear power plants.[8] Consequently, in years during which more than one nuclear power plant would be undergoing dismantlement, there is a small but potentially significant probability that a single refinery would receive copper scrap from more than one plant.

D.3.1 Processing of Copper Scrap by Scrap Dealers

There are approximately 770 copper scrap dealers in the United States. This estimate is based on the companies in the category "Copper Scrap Industry" listed by BrassMetals.com (2002). The initial count of 979 firms is reduced by eliminating foreign firms, buyers and brokers, hauling and trucking companies, auto salvage and crushers, marketing and investment firms, catalytic converter recyclers, and disposal systems manufacturers.

No detailed information is available on the amounts of scrap processed by these dealers. However, according to an engineer at a major scrap metal dealer, the average nonferrous metal scrap yard processes an estimated 500 tons (~450 t) of scrap per month; the largest such facility processes 2,000 tons (~1,800 t) per month.[9] There is essentially no lower limit, since some small dealers might process as little as a barrel of copper scrap a month. However, the present analysis assesses the radiation exposure of a full-time worker. Therefore, the smallest scrap yard included in the analysis processes enough scrap to occupy at least one such worker.[10] The man-hours required to process a given quantity of scrap can be estimated by noting that a three-man crew at a large scrap yard requires 2 days to prepare a 20-ton (~18 t) truckload.[9] Assuming a nominal 8-hour day, the processing requires 2.4 man-hours per ton. Therefore a small dealer, with one full-time worker processing scrap, could process about 70 tons (~64 t) per month (2000 h/y ÷ [12 mo/y × 2.4 h/ton] . 70 tons/mo).

The throughput of nonferrous metal scrap processors is represented by a beta function with a range of 0 – 2,000 tons/month (~1,800 t/mo), and a mean of 500 tons (~450 t) per month. The beta function, **$**(x), is characterized by the following parameters: alpha = 0.5, beta = 1.5. The function $y_i = \int_{x_i}^{x_i+1} \beta(x)\,dx$ is evaluated at 193 points, 70 # x_i # 1990 tons/mo, at intervals of 10 tons/mo. A normalized, mass-weighted probability distribution is determinated from the product $\left(\frac{x_{i+1} + x_i}{2}\right) y_i$ and assigned to the points $\frac{x_{i+1} + x_i}{2}$. This distribution is illustrated in Figure D.1. An analysis of the distribution produced the following statistics:

[8] The fraction of scrap consumed by the fire refineries is derived in Section 4.2.2. As is explained in Section 4.6.8, only exposure scenarios involving the fire refining of copper scrap are subject to detailed, probabilistic analyses.

[9] Norb Geiss, David J. Joseph Company, private communication with Robert Anigstein and William C. Thurber, SC&A, Inc., February 14, 2003.

[10] Cleared scrap at a smaller scrap yard would experience less mixing, but the shorter work-hours would result in a proportional reduction in the radiation exposure.

median = 1,004 tons/mo
. 10,930 t/y
mode = 1,000 tons/mo
. 10,890 t/y
mean = 1,011 tons/mo
. 11,000 t/y

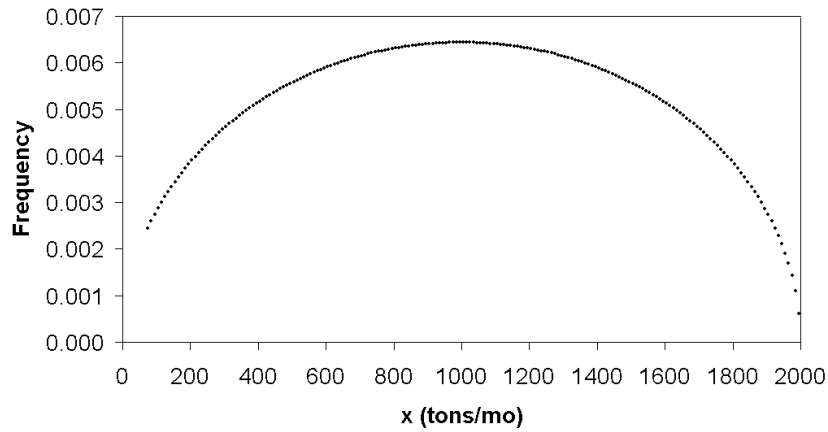

Figure D.1 Distribution of nonferrous metal scrap dealers

D.3.2 Fire-Refining of Copper Scrap

In the background report on secondary copper production, prepared in support of Section 12.9 of EPA's "Compilation of Air Pollutant Emission Factors" (EPA 1995), Pacific Environmental Services (n/d, Table 2.1-1), lists 10 secondary copper smelters and refineries. Of the 10 facilities listed, only 4, listed in Table D.7, were fire refining copper scrap at the end of 2000.

Table D.7 Annual capacities of U.S. secondary copper fire refineries

Operator	Location	Annual capacity (t/a)	Fraction (%)
Cerro Copper Products	Sauget, IL	125,000	46.1
Cyprus (Phelps Dodge)	Warrenton, MO	32,000	11.8
Essex	Fort Wayne, IN	44,000	16.2
Reading Metals	Reading, PA	70,000	25.8
Total		271,000	100.0

Source: Pacific Environmental Services (n/d, Table 2.1-1)

The probability that copper scrap is processed at a given fire refinery is[11]

$$p_j = \frac{f_r \, m_j}{M_r}$$

p_j = probability that copper scrap is processed at fire refinery *j*

f_r = fraction of Cu scrap consumed by all fire-refining furnaces
= 0.286

m_j = annual capacity of fire refinery *j* (kt)

[11] Some of the variables used in the probabilistic calculation of mixing factors for copper scrap are represented by symbols similar to those used in the calculation of maximum single heat mixing factors for steel mills, presented in Section D.2.2. The actual variables used in these two analysis are distinct and independent.

M_r = combined capacity of all U.S. fire-refining facilities
= 271 kt

As stated on page D-9, there is a non-negligible probability that copper scrap from two or more nuclear power plants undergoing dismantlement at the same time could be processed at the same refinery. To assess this probability, we first need to determine how many commercial nuclear power plants would be decommissioned in a given year. The year of projected shutdown of the 104 reactors currently licensed to operate is based on the expiration date of the current operating license, including, in three cases, credit for construction recapture (NRC 2000, Table 12).[12] In addition to the operating reactors, there are 27 nuclear power reactors which were formerly licensed to operate (NRC 2000, Appendix B). Of these, 6 are not light water reactors (LWRs). Only the 14 LWR reactors which are in SAFSTOR or scheduled for DECON are included in the present analysis.[13] Reactors where DECON is in progress or has been completed are excluded, as are reactors which are in an ENTOMB status.[14] It is assumed that dismantlement of each of these 118 facilities will commence 10 years after reactor shutdown, except for facilities that have elected the SAFSTOR alternative. For these latter reactors, dismantlement will be delayed by an additional 50 years, and will therefore begin 60 years after shutdown.

Table D.8 lists the number of reactors scheduled to begin dismantlement in each year in which dismantlement activities occur. These data are used to construct a CDF of the number of reactors undergoing dismantlement in any given year, as shown in Table D.9. The amount of cleared copper scrap that would be processed at a free-standing fire refinery in any given year is calculated as follows. We assume, for the purpose of the analysis, that the scrap from one reactor would be processed at one of the four fire refineries listed in Table D.7. If a total of N ($N > 1$) reactors undergo dismantlement in that year, the probability that scrap from *i additional* reactors is processed at the same refinery during that year is

[12] Construction recapture is defined as “[t]he maximum number of years that could be added to the license expiration date to recover the period from the construction permit to the date when the operating license was granted. A licensee is required to submit an application for such a change” (NRC 2000).

[13] Decommissioning involves three different alternatives: DECON, SAFSTOR, or ENTOMB (NRC 2004).

- Under DECON (immediate dismantlement), soon after the nuclear facility closes, equipment, structures, and portions of the facility containing radioactive contaminants are removed or decontaminated to a level that permits release of the property and termination of the NRC license.
- Under SAFSTOR, often considered "delayed DECON," a nuclear facility is maintained and monitored in a condition that allows the radioactivity to decay; afterwards, it is dismantled.
- Under ENTOMB, radioactive contaminants are encased in a structurally sound material such as concrete and appropriately maintained and monitored until the radioactivity decays to a level permitting release of the property.

[14] It is recognized that the shutdown schedule of nuclear reactors is fluid: some reactors may be granted 20-year license renewals, while others may shut down prior to the expiration of their operating licenses.

$$P_{ij}(n) = \frac{n!}{i!(n-i)!} p_j^{\,i} (1 - p_j)^{n-i} \qquad (i \# n)$$

P_{ij} (n) = probability that copper scrap from *i* out of *n additional* reactors is processed at refinery *j* in a given year

n = N ! 1

N = total number of reactors undergoing dismantlement in a given year

i = number of additional reactors feeding copper scrap to refinery *j*

The total number of reactors undergoing dismantlement in a given year (N) is selected by random sampling of the distribution presented in Table D.9. The number of additional reactors (*i*) feeding copper scrap to a given refinery is selected by random sampling from a distribution with a range of 1 to N ! 1, with each value of *i* being assigned the probability $P_{ij}(n)$, presented above.

Table D.8 Reactor dismantlement schedule

Year	No. reactors	Year	No. reactors
2006	2	2034	8
2007	1	2035	6
2016	1	2036	10
2019	3	2037	5
2020	3	2038	2
2021	2	2039	3
2022	6	2040	1
2023	10	2043	3
2024	11	2044	2
2025	2	2045	1
2026	6	2046	1
2027	3	2047	1
2028	3	2049	1
2030	3	2052	1
2031	4	2056	1
2032	6	2057	1
2033	4	2058	1
Total			118

The mixing factor for the cleared scrap is given by

$$f_{Cu,j} = \frac{k\, m_{Cu}}{m_j}$$

$f_{Cu,j}$ = annual-average mixing factor for copper scrap processed at fire refinery *j*

k = total number of reactors feeding copper scrap to fire refinery *j*
= i + 1

m_{Cu} = mass of copper scrap cleared during the dismantlement of one nuclear reactor
= 62 t

Table D.9 Annual number of reactors undergoing dismantlement

No. reactors	CDF (%)
1	32.35
2	47.06
3	67.65
4	73.53
5	76.47
6	88.24
8	91.18
10	97.06
11	100.00

D.4 Calculation of Mixing Factors for Aluminum Scrap

The sources of cleared aluminum scrap are discussed in Section 5.2.1 of the main report. The mixing of aluminum scrap is modeled in the same manner as that of copper scrap, described above. Only those aspects of the analysis that are unique to aluminum are discussed in this section.

D.4.1 Processing of Aluminum Scrap by Scrap Dealers

The U.S. aluminum scrap industry comprises approximately 884 firms. This estimate is based on a list of companies belonging to the aluminum scrap industry (“Metal World . . .” 2002). The initial count of 1,199 companies was reduced by eliminating foreign-based companies, aluminum buyers and brokers, hauling and trucking companies, aluminum can recyclers, auto salvage and crushers, marketing and investment firms, x-ray and lithographic negative recyclers, junk yards, handrail makers, catalytic converter recyclers, computer recyclers, and disposal systems manufacturers. Companies that are included are generally described as scrap recyclers, traders, dealers, and processors.

No detailed information is available on the amounts of scrap processed by these dealers. The distribution of throughput of nonferrous metal scrap processors that is described in Section D.3.1 is therefore used to determine the mixing factor in the aluminum scrap yard scenario, which is discussed in Section 5.4.2 of the main report.

D.4.2 Secondary Smelter Operations

D.4.2.1 Annual-Average Mixing Factors

As discussed in Section 5.2.3 of the main report, there are 75 producers of secondary aluminum ingots in the United States. Not all of these operate secondary smelters. A search of published literature yielded data on the annual production capacities of 18 secondary smelters, owned by six different companies, as shown in Table D.10. While these facilities do not include all U.S. secondary smelters, they are assumed to constitute a representative sample of such facilities. In fact, the combined production capacities of these 18 facilities—1.48 Mt—is virtually the same as the total amount of aluminum recovered from scrap by U.S. secondary smelters in 2000—1.45 Mt, as listed in Table 5.2 of the main report.

Table D.10 Annual capacities of U.S. secondary aluminum smelters

Company	Smelter	Capacity (t/y)	Probability (%)
Wabash Alloys LLC	Marietta, PA	27,200	1.84
Wabash Alloys LLC	Checotah, OK	32,700	2.21
Wabash Alloys LLC	Benton, AR	43,500	2.94
Wabash Alloys LLC	Cleveland, OH	43,500	2.94
Wabash Alloys LLC	Russellville, AL	43,500	2.94
Wabash Alloys LLC	Ohio Valley	51,700	3.50
Wabash Alloys LLC	Culp—Steele, AL[a]	54,400	3.68
Wabash Alloys LLC	Tipton, IN	59,900	4.05
Audubon Metals	[b]	65,800	4.45
Scepter, Inc.		70,800	4.79
Wabash Alloys LLC	Dickson, TN	76,200	5.15
Wabash Alloys LLC	Bellewood, VA	81,600	5.52
Wabash Alloys LLC	Syracuse, NY	81,600	5.52
IMCO Recycling, Inc.	Kentucky	99,800	6.75
OmniSource Corp.	[b]	109,000	7.37
IMCO Recycling of Ohio, Inc.	[b]	163,000	11.02
Wabash Alloys LLC	Wabash, IN	185,000	12.51
Alcan Aluminum Corporation	[b]	190,000	12.84
	Total	1,479,200	100.00

[a] Culp Aluminum Alloys was acquired by Wabash Alloys LLC in September 2002

[b] Smelter location not specified

As is the case in the steel and copper recycling analyses, we assume that the probability that cleared aluminum scrap would be recycled at a given smelter, listed in the last column of Table D.10, is proportional to the annual capacity of that smelter. This probability is equal to the annual capacity of the given smelter as a percentage of the total capacity of all 18 smelters. These data are used to construct a discrete distribution of smelter capacities. The annual-average mixing factor is the ratio of the mass of aluminum scrap cleared from a nuclear power reactor to the annual capacity of the smelter.

D.4.2.2 Maximum Single-Heat Mixing Factors

As is discussed in Section 5.4.3.2 of the main report, the aluminum scrap cleared from one nuclear power plant would most likely be charged to the furnace in a single heat. Only limited data on the sizes of reverberatory furnaces at secondary aluminum smelters were found in the course of the present study; these data are listed in Table D.11. The total melting capacity of furnaces of a given size, listed in the third column of Table D.11, is the product of the size of the individual furnace and the number of furnaces of that size.[15] The probability that cleared aluminum scrap would be melted in furnace of a given size is proportional to the total melting capacity of furnaces of that size. The probability is equal to total melting capacity of furnaces of a given size as a percentage of the total melting capacity of all 17 furnaces listed. These data are used to construct a discrete distribution of furnace sizes. The maximum single-heat mixing factor is the ratio of the mass of cleared scrap to the size of the given furnace.

Table D.11 Sizes of reverberatory furnaces at U.S. secondary aluminum smelters

Furnace size (tons)	Number of furnaces	Total (tons)	Probability (%)
40	1	40	2.59
50	2	100	6.47
80	2	160	10.36
85	1	85	5.50
90	1	90	5.83
100	3	300	19.42
110	7	770	49.84
Total	17	1,545	100.00

[15] This should not be confused with the annual capacities of secondary smelters listed in Table D.10

References

BrassMetals.com. 2002. "BMX Copper Scrap Exchange." Author. http://www.brassmetals.com/a/9501.html (September 5, 2002).

Bureau of the Census (U.S.) 2000. "1997 Economic Census: Wholesale Trade—Establishment and Firm Size," EC97W42S-SZ. http://www.census.gov/prod/ec97/97w42-sz.pdf (August 14, 2002).

"EAF Roundup." 2001. *Iron and Steelmaker, 28*(5), 29–40.

Environmental Protection Agency (U.S.) (EPA). 1995. "Compilation of Air Pollutant Emission Factors," AP-42. 5th ed. Vol. 1, "Stationary Point and Area Sources." Washington DC: Author. http://www.epa.gov/ttn/chief/ap42/ch12/ (June 6, 2003).

Fenton, M. D. 1998. "Iron and Steel Scrap." In *Minerals Yearbook—1997*. U.S. Geological Survey. http://minerals.usgs.gov/minerals/pubs/commodity/iron_&_steel_scrap/360497.pdf (April 21, 2004).

"Metal World: IME Aluminum Scrap Exchange." http://www.metalworld.com/a/0133.html (September 16, 2002).

Nuclear Regulatory Commission (U.S.) (NRC). 2000. "Information Digest, 2000 Edition," NUREG-1350. Vol. 12. Washington DC: Author.

Nuclear Regulatory Commission (U.S.), Office of Public Affairs (NRC). 2004. "Decommissioning Nuclear Power Plants—Fact Sheet." Washington DC: Author. http://www.nrc.gov/reading-rm/doc-collections/fact-sheets/decommissioning.html (April 21, 2004).

Pacific Environmental Services, Inc. (n/d). "Background Report: AP-42, Section 12.9, Secondary Copper Smelting, Refining, and Alloying." Research Triangle Park, NC: U.S. Environmental Protection Agency. http://www.epa.gov/ttnchie1/ap42/ch12/bgdocs/b12s09.pdf (March 14, 2003).

APPENDIX E

INGROWTH OF RADIOACTIVE PROGENY

CONTENTS

Page

Appendix E Ingrowth of Radioactive Progeny E-1
E.1 Short-lived Progeny in Secular Equilibrium with Parent E-1
E.2 Calculating Progeny Ingrowth E-2
E.2.1 Constant Source Term E-2
E.2.2 Variable Source Term E-2
E.2.2.1 Product-Use Scenarios E-2
E.2.2.2 Groundwater Scenarios E-5
E.2.3 Progeny That Were Omitted E-5
References E-6

Tables

E.1 Progeny of nuclides selected for analysis E-3
E.2 Lifetime of Finished Products E-5

E INGROWTH OF RADIOACTIVE PROGENY

This appendix describes the methodology used to model the ingrowth of radioactive progeny over the periods of assessment used in the analysis.

E.1 Short-lived Progeny in Secular Equilibrium with Parent

Because of the varying and largely unknown history of cleared materials, it is both reasonable and conservative to assume that many short-lived radioactive progenies would be in secular equilibrium with their parents at the time of release. Such daughter products[1] are called the *implicit progeny* of the parent. In the present analysis, these implicit progenies satisfy two conditions: (1) the half-life of the daughter is less than 180 days, (2) the half-life of the parent is at least 10 times the half-life of the daughter. For two-member decay chains satisfying these conditions, 90% of full equilibrium is reached in ~ 3.3 half-lives of the daughter—about 458 d (~15 mos) in the case of Po-210, the longest-lived nuclide in the implicit progenies in the present analysis. The radiation from these nuclides is incorporated in the dose assessments described by Equations 3.6 – 3.9 in Volume 1. In such cases, the dose factor[2] of the parent nuclide in these equations is expressed as the sum of the dose factors of the parent and of the daughters

$$F_{ik} = G_{ik} + \sum_{j}^{n} b_{ij} G_{jk}$$

F_{ik} = dose factor for nuclide *i* (parent) for exposure pathway *k*, adjusted for ingrowth of short-lived progeny

G_{ik} = dose factor for nuclide *i* via exposure pathway *k*

n = number of nuclides comprising implicit progeny of parent

b_{ij} = branching ratio of nuclide *j*

G_{jk} = dose factor for nuclide *j* via exposure pathway *k*

In the radiological assessments, the doses calculated in each scenario are normalized to an initial unit activity of the *parent* in the cleared material.

Table E.1 lists the implicit progenies included in the present analysis.

[1] The terms “daughter product” and “daughter” refer to members of a decay chain that may include two or more generations as well as competing decay modes (branches).

[2] The term “dose factor” is used to refer to dose conversion factors (DCFs) (Eckerman et al. 1988), effective dose coefficients (ICRP 1994), and dose coefficients for external exposure.

E.2 Calculating Progeny Ingrowth

Progenies that do not satisfy the criteria for implicit progenies, discussed above, are not assumed to grown in prior to the release of the cleared material. Following the time of release, the ingrowth of such nonimplict progenies is calculated by explicitly solving the Bateman equations (Evans 1955) for the time of assessment of each scenario. The decay chains considered in the present analysis are listed in Table E.1. The only exception to the rule presented in Section E.1 is the decay chain Ra-226 Y Pb-210 Y Bi-210 Y Po-210. When Ra-226 is the primary nuclide, the ingrowth of both Pb-210 and Po-210 are calculated separately and explicitly, while Bi-210 is assumed to be in secular equilibrium with Pb-210. When Pb-210 is the primary radionuclide, however, both Bi-210 and Po-210 are assumed to be in secular equilibrium with their parent.

E.2.1 Constant Source Term

In scenarios where the source is a steady stream of residually radioactive material, the time following clearance is specified for each scenario—see the sections entitled “Scenario Timing” in Chapters 3 – 6. Due to the probabilistic nature of the analysis, this time is usually described by a probability distribution, so the decay and ingrowth of each nuclide are calculated separately for each realization.

E.2.2 Variable Source Term

In a number of scenarios, the source term varies with time during the assessment period. Such variable source terms occur in the product-use and groundwater scenarios.

E.2.2.1 Product-Use Scenarios

In the product-use scenarios, in the case of radionuclides without long-lived progenies, the scenario begins at the time the product is first put into service, and lasts for one year. As shown in Section 3.6.1.2, the dose is calculated by integrating the dose rate over this one-year period, accounting for radioactive decay during this time. This is an appropriately conservative analysis, since the doses will be highest during the first year.

For decay chains with two or more members, that is not necessarily the case. In some instances, the dose rate would increase over some period of time before reaching a peak. The time of peak dose depends on the half-lives of all of the nuclides in the chain (other than the implicit progenies), and the dose factor of each nuclide for the pathway and scenario in question. The year of peak dose is determined separately for each parent nuclide in each product-use scenario. It is calculated by adjusting the start time of each scenario by small increments, beginning with the time the product is put in service, and continuing over the useful life of the given product, which is listed in Table E.2. At each time step, the dose from all the nuclides in the given decay chain is integrated over a one-year period—the one-year period corresponding to the highest integrated dose is the year of peak dose for that decay chain in that scenario. Thus, the time of assessment may be different for different nuclides in the same scenario.

Table E.1 Progeny of nuclides selected for analysis

Parent		Implicit progeny of parent[a]			Daughter			Granddaughter		
Nuclide	$t_{½}$ (y)[b]	Nuclide	BR[c] (%)	$t_{½}$	Nuclide	BR[c] (%)	$t_{½}$ (y)[b]	Nuclide	BR[c] (%)	$t_{½}$ (y)
Sr-90	28.78	Y-90	100.00	64.1 h						
Zr-93	1.53e+06				Nb-93m	97.50	16.13			
Zr-95	64.02 d	Nb-95m	1.13	86.6 h	Nb-95	99.94	34.975 d			
Mo-93	4.0e+03				Nb-93m	88	16.13			
Ru-103	39.26 d	Rh-103m	99.76	56.12 m						
Ru-106	373.59 d	Rh-106	100.00	29.8 s						
Ag-108m	418	Ag-108	8.7	2.37 m						
Ag-110m	249.79 d	Ag-110	1.36	24.6 s						
Cd-109	462.6 d	Ag-109m	100.00	39.6 s						
Sn-113	115.09 d	In-113m	100.00	1.6582 h						
Sb-125	2.7582	Te-125m	22.8	57.4 d						
Te-127m	109 d	Te-127	97.6	9.35 h						
Cs-137	30.07	Ba-137m	94.4	2.552 m						
Ce-144	0.781	Pr-144m	1.43	7.2 m						
		Pr-144	98.60	17.28 m						
Pb-210	22.3	Bi-210	100.00	5.013 d						
		Po-210	100.00	138.376 d						
Ra-226	1600	Rn-222	100.00	3.8235 d						
		Po-218	100.00	3.10 m						
		Pb-214	99.98	26.8 m						
		Bi-214	100.00	19.9 m						
		Po-214	99.97	164.3 :s	Pb-210	100.00	22.3	Po-210	100.00	138.376 d
Ra-228	5.75	Ac-228	100.00	6.15 h	Th-228	100.00	1.9131			
Ac-227	21.772	Fr-223	1.38	21.8 m						
		Th-227	98.62	18.68 d						
		Ra-223	100.00	11.435 d						
		Rn-219	100.00	3.96 s						
		Po-215	100.00	1.781 ms						
		Pb-211	100.00	36.1 m						
		Bi-211	100.00	2.14 m						
		Tl-207	99.724	4.77 m						
		Po-211	0.276	0.516 s						
Th-228	1.9131	Ra-224	100.00	3.66 d						
		Rn-220	100.00	55.6 s						
		Po-216	100.00	0.145 s						
		Pb-212	100.00	10.64 h						
		Bi-212	100.00	60.56 m						
		Tl-208	35.94	3.053 m						
		Po-212	64.06	0.299 :s						

Table E.1 Progeny of nuclides selected for analysis

Parent		Implicit progeny of parent[a]			Daughter			Granddaughter		
Nuclide	$t_{½}$ (y)[b]	Nuclide	BR[c] (%)	$t_{½}$	Nuclide	BR[c] (%)	$t_{½}$ (y)[b]	Nuclide	BR[c] (%)	$t_{½}$ (y)
Th-229	7340	Ra-225	100.00	14.9 d						
		Ac-225	100.00	10.0 d						
		Fr-221	100.00	4.9 m						
		At-217	100.00	32.3 ms						
		Bi-213	99.988	45.59 m						
		Tl-209	2.09	2.20 m						
		Po-213	97.91	4.2 :s						
		Pb-209	100.00	3.253 h						
Th-230	7.538e+04				Ra-226	100.00	1600	Pb-210	100.00	2.23e+01
Th-232	1.405e+10				Ra-228	100.00	5.75	Th-228	100.00	1.9131
Pa-231	32760				Ac-227	100.00	21.77			
U-232	68.9				Th-228	100.00	1.9131			
U-233	1.592e+05				Th-229	100.00	7340			
U-234	2.455e+05				Th-230	100.00	7.538e+04	Ra-226	100.00	1.60e+03
U-235	7.038e+08	Th-231	100.00	25.52 h	Pa-231	100.00	32760	Ac-227	100.00	21.772
U-238	4.47e+09	Th-234	100.00	24.1 d						
		Pa-234m	100.00	1.17 m						
		Pa-234	0.16	6.7 h						
Np-237	2.14e+06	Pa-233	100.00	26.967 d	U-233	100.00	1.59e+05			
Pu-236	2.858				U-232	100.00	68.9	Th-228	100.00	1.9131
Pu-241	14.35				Am-241	99.998	432.2			
Pu-244	8.08e+07	U-240	100.00	14.1 h	Pu-240	100.00	6563			
		Np-240m	100.00	7.22 m						
		Np-240	0.11	61.9 m						
Am-242m	141	Am-242	99.541	16.02 h	Pu-238	82.7	87.7			
		Cm-242	82.3	162.8 d						
		Np-238	0.46	2.117 d						
Am-243	7370	Np-239	100.00	2.3565 d	Pu-239	100.00	24110			
Cm-242	162.8 d				Pu-238	100.00	87.7			
Cm-243	29.1				Pu-239	100.00	24110			
Cm-244	18.1				Pu-240	100.00	6563			
Cm-245	8500				Pu-241	100.00	14.35	Am-241	99.998	432.2
Cm-246	4730				Pu-242	99.97	3.733e+05			
Cm-247	1.56e+07	Pu-243	100.00	4.956 h	Am-243	100.00	7370	Pu-239	100.00	24110
Bk-249	320 d				Cf-249	99.986	351			
Cf-248	333.5 d				Cm-244	99.997	18.1	Pu-240	100.00	6563
Cf-249[d]	351				Cm-245	100.00	8500	Pu-241	100.00	14.35
Cf-250	13.08				Cm-246	99.923	4730			
Es-254	275.7 d	Bk-250	100.00	3.217 h	Cf-250	100.00	13.08	Cm-246	99.923	4730

[a] Implicit progeny: $t_{½}$ (daughter) < 180 d and $t_{½}$ (parent) > 10 $t_{½}$ (daughter)
[b] Units are years unless otherwise specified
[c] BR = branching ratio
[d] Four-member decay chain: last member = Am-241, BR = 99.998%, $t_{½}$ = 432.2 y

Table E.2 Lifetime of Finished Products

Scenario title	Product	Life (y)
Steel		
Sailor with watch station in operations area Sailor with watch station on deck	Ship	35
Sailor berthing near steel hull plate	Hull plate	35
Driving on road built with steel slag	Road	30
Living in basement built with cement made from slag	Basement	100
Exposure to large metal mass	Large steel mass	100
Exposure to small metal mass	Small steel mass	100
Small steel object on body	Steel object on body	100
Living in home built with steel studs	Home with steel studs	100
Driver of automobile with cast iron engine block	Cast iron engine block–automobile	5
Driver of truck with cast iron diesel engine block	Cast iron diesel engine block–truck	10
Copper		
Exposure to small mass of fire-refined copper	Small copper mass	20
Small fire-refined copper object on body	Copper object on body	20
Drinking tapwater from copper pipes	Copper pipes	35
Aluminum		
Exposure to large metal mass	Large aluminum mass	30
Exposure to small metal mass	Small aluminum mass	30
Driver of taxi with aluminum engine block	Aluminum engine block–taxi	3
Use of aluminum cooking ware	Aluminum cookware	20
Concrete		
Driving on road built with recycled concrete	Road	30

E.2.2.2 Groundwater Scenarios

The year of peak dose in the groundwater scenarios is a complicated function of progeny ingrowth, leach rates, and the movement of the radionuclides through the hydrogeological environment. This peak year is explicitly calculated for each radionuclide in each realization (see discussion on pages 3-81 and 3-90 in Volume 1).

E.2.3 Progeny That Were Omitted

Some radioactive progenies were omitted from the ingrowth analyses. These included very long-lived nuclides whose ingrowth during the maximum period of assessment—1,000 years for the drinking water scenarios—would make no significant contribution to the calculated doses, and the products of decay modes with very small branching ratios. An example of the former

case is the ingrowth of U-234 and its progeny from the decay of U-238. After 1,000 years, 1 Bq of U-238 will yield about 2.8 mBq of U-234, 13 :Bq of Th-230, and less than 1.7 :Bq each of Ra-226 and the members of its decay chain. The effective dose from drinking water containing these nuclides would be 0.0474 :Sv per Bq of U-238 ingested if only the contribution of U-238 and its implicit progeny were considered, and 1.4×10^{-4} :Sv more if the dose contribution from the entire decay chain were included, a difference of 0.3%.

As a rule of thumb, progenies estimated to contribute about 1% or less to the total dose from any exposure scenario were omitted.

References

Eckerman, K. F., A. B. Wolbarst, and A. C. B. Richardson. 1988. "Limiting Values of Radionuclide Intake and Air Concentration and Dose Conversion Factors for Inhalation, Submersion, and Ingestion," Federal Guidance Report No. 11, EPA-520/1-88-020. Washington, DC: U.S. Environmental Protection Agency, Office of Radiation Programs.

Evans, R. D. 1955. *The Atomic Nucleus.* New York: McGraw-Hill Book Company, Inc.

International Commission on Radiological Protection (ICRP). 1994. "Dose Coefficients for Intakes of Radionuclides by Workers," ICRP Publication 68. *Annals of the ICRP, 24*(4). Tarrytown, NY: Elsevier Science, Inc.