NUREG-0700
Rev. 2

Human-System Interface Design Review Guidelines

U.S. Nuclear Regulatory Commission
Office of Nuclear Regulatory Research
Washington, DC 20555-0001

NUREG-0700
Rev. 2

Human-System Interface Design Review Guidelines

Manuscript Completed: March 2002
Date Published: May 2002

Prepared by:
J.M O'Hara and W.S. Brown, BNL/ESTD
P.M. Lewis and J.J. Persensky, NRC/RES/DSARE

Energy Sciences & Technology Department
Brookhaven National Laboratory
Upton, NY 11973-5000

Division of Systems Analysis and Regulatory Effectiveness
Office of Nuclear Regulatory Research
U.S. Nuclear Regulatory Commission
Washington, DC 20555-0001

ABSTRACT

The U.S. Nuclear Regulatory Commission (NRC) staff reviews the human factors engineering (HFE) aspects of nuclear power plants in accordance with the *Standard Review Plan* (NUREG-0800). Detailed design review procedures are provided in the *HFE Program Review Model* (NUREG-0711). As part of the review process, the interfaces between plant personnel and plant's systems and components are evaluated for conformance with HFE guidelines. This document, *Human-System Interface Design Review Guidelines* (NUREG-0700, Revision 2), provides the guidelines necessary to perform this evaluation. The review guidelines address the physical and functional characteristics of human-system interfaces (HSIs). Since these guidelines only address the HFE aspects of design and not other related considerations, such as instrumentation and control and structural design, they are referred to as HFE guidelines. In addition to the review of actual HSIs, the NRC staff can use the NUREG-0700 guidelines to evaluate a design-specific HFE guidelines document or style guide. The HFE guidelines are organized into four basic parts, which are divided into sections. Part I contains guidelines for the basic HSI elements: displays, user-interface interaction and management, and controls. These elements are used as building blocks to develop HSI systems to serve specific functions. Part II contains the guidelines for reviewing six such systems: alarm system, group-view display system, soft control system, computer-based procedure system, computerized operator support system, and communication system. Part III provides guidelines for the review of workstations and workplaces. Part IV provides guidelines for the review of HSI support, i.e., maintainability of digital systems.

CONTENTS

ABSTRACT iii
PREFACE xvii
ACRONYMS xxiii

PART I: Basic HSI Elements

1 INFORMATION DISPLAY 1
1.1 General Display Guidelines 9
1.2 Display Formats 18
1.2.1 Continuous Text Displays 18
1.2.2 Tables and Lists 21
1.2.3 Data Forms and Fields 24
1.2.4 Bar Charts and Histograms 28
1.2.5 Graphs 31
1.2.6 Pie Charts 36
1.2.7 Flowcharts 37
1.2.8 Mimics and Diagrams 38
1.2.9 Maps 40
1.2.10 Integral and Configural Formats 42
1.2.11 Graphic Instrument Panels 44
1.2.12 Speech Displays 45
1.3 Display Elements 47
1.3.1 Alphanumeric Characters 47
1.3.2 Abbreviations and Acronyms 49
1.3.3 Labels 50
1.3.4 Icons and Symbols 51
1.3.5 Numeric Data 53
1.3.6 Scales, Axes, and Grids 54
1.3.7 Borders, Lines, and Arrows 59
1.3.8 Color 60
1.3.9 Size, Shape, and Pattern Coding 65
1.3.10 Highlighting by Brightness and Flashing 66
1.3.11 Auditory Coding 68
1.4 Data Quality and Update Rate 71
1.5 Display Pages 73
1.6 Display Devices 77
1.6.1 Video Display Units 77
1.6.2 Projectors 80
1.6.3 Printers, Recorders, and Plotters 81
1.6.4 Meters 84
1.6.5 Light Indicators 86
1.6.6 Numeric Readouts 88
2 USER-INTERFACE INTERACTION AND MANAGEMENT 89
2.1 General User Input Guidelines 101
2.2 User Input Formats 115
2.2.1 Command Language 115
2.2.2 Menus 118
2.2.2.1 General 118

CONTENTS (continued)

2.2.2.2 Arrangement of Menu Options 122
2.2.2.3 Hierarchical Menus 123
2.2.2.4 Menu Bars 126
2.2.2.5 Selection of Menu Options 127
2.2.2.6 Wording and Coding Menu Options 129
2.2.3 Function Keys 131
2.2.4 Macros/Programmable Function Keys 134
2.2.5 Forms 135
2.2.6 Direct Manipulation 138
2.2.7 Natural Language 143
2.2.8 Query Language 144
2.2.9 Question and Answer 146
2.2.10 Speech 147
2.3 Cursors 149
2.3.1 Appearance 149
2.3.2 Controls 150
2.3.3 Movement 151
2.3.4 Multiple Cursors 153
2.3.5 Pointing Cursors 154
2.3.6 Text Entry Cursors 155
2.3.7 Multiple Display Devices 156
2.4 System Response 157
2.4.1 Prompts 157
2.4.2 Feedback 159
2.4.3 System Response Time 160
2.5 Managing Displays 162
2.5.1 Display Selection and Navigation 162
2.5.1.1 Orientation Features 162
2.5.1.2 Retrieval Features 165
2.5.1.3 Navigation Features for Large Display Pages 169
2.5.2 Windows 171
2.5.3 Display Control 179
2.5.4 Display Update/Freeze 180
2.5.5 Display Suppression 181
2.5.6 Scrolling and Paging 182
2.5.7 Automated Actions 185
2.6 Managing Information 186
2.6.1 Editing Documents 186
2.6.2 Saving Files 191
2.6.3 Temporary Editing Buffer 192
2.6.4 Excerpt File 193
2.7 User Assistance 194
2.7.1 General 194
2.7.2 Advisory Messages 196
2.7.3 Error Messages 197
2.7.4 Validating User Input 199
2.7.5 Confirming Entries 201
2.7.6 Protecting Data 202
2.7.7 Correcting Information/Command Entries 204
2.7.8 User Guidance/Help 206
2.8 Interface Flexibility 208

CONTENTS (continued)

2.9 System Security 210
2.9.1 User Identification 210
2.9.2 Information Access 213
3 CONTROLS 215
3.1 General Control Guidelines 217
3.1.1 Design Principles 217
3.1.2 Coding of Controls 221
3.2 Input Devices 223
3.2.1 Alphanumeric Keyboards 223
3.2.2 Function Keys 227
3.2.3 Trackballs, Joysticks, and Mice 229
3.2.4 Touch Screens, Light Pens, and Graphic Tablets 231
3.3 Conventional Control Devices 233
3.3.1 Pushbutton Controls 233
3.3.1.1 General 233
3.3.1.2 Round Pushbuttons 234
3.3.1.3 Legend Pushbuttons 235
3.3.2 Rotary Controls 237
3.3.2.1 General 237
3.3.2.2 J-Handles 239
3.3.2.3 Key-Operated Controls 240
3.3.2.4 Continuous Adjustment Controls 242
3.3.2.5 Rotary Selector Controls 244
3.3.3 Other Controls 246
3.3.3.1 Thumbwheels 246
3.3.3.2 Slide Switches 247
3.3.3.3 Toggle Switches 248
3.3.3.4 Rocker Switches 249

PART II: HSI Systems

4 ALARM SYSTEM 251
4.1 Alarm System High-Level Functions 263
4.1.1 Alarm Definition 263
4.1.2 Alarm Processing 265
4.1.3 Alarm Prioritization and Message Availability 268
4.2 Information Display 269
4.2.1 General Alarm Display Guidelines 269
4.2.2 Display of High-Priority Alarms 271
4.2.3 Display of Alarm Status 272
4.2.4 Display of Shared Alarms 273
4.2.5 Alarm Contents 275
4.2.6 Coding Methods 277
4.2.6.1 General 277
4.2.6.2 Visual 278
4.2.6.3 Audible Codes 279
4.2.7 Organization of Alarms 283
4.2.7.1 Spatially Dedicated, Continuously Visible Alarm Displays 283
4.2.7.2 Alarm Message Lists 285
4.3 User-System Interaction and Controls 286
4.3.1 General Alarm Control Guidelines 286
4.3.2 Silence Functions 287

CONTENTS (continued)

4.3.3 Acknowledge Controls 288
4.3.4 Reset Functions 289
4.3.5 Alarm Management 290
4.3.6 Automatic Features 291
4.3.7 Control Devices 292
4.4 Reliability, Test, Maintenance, and Failure Indication Features 293
4.4.1 Reliability 293
4.4.2 Test 294
4.4.3 Maintenance 295
4.4.4 Failure Indication 296
4.5 Alarm Response Procedures (ARPs) 297
4.6 Control-Display Integration and Layout 299
4.7 Integration with Other HSI Elements 300
5 SAFETY FUNCTION AND PARAMETER MONITORING SYSTEM 301
5.1 Information Display 303
5.2 User-System Interaction 305
5.3 Reliability, Test, Maintenance, and Failure Indication Features 306
5.4 Integration with Other HSI Elements 307
6 GROUP-VIEW DISPLAY SYSTEM 309
6.1 Functional Characteristics 313
6.1.1 General 313
6.1.2 Overview Display 315
6.1.3 Access to Additional Information 318
6.1.4 Support for Crew Coordination 319
6.1.5 Crew Communication and Collaboration 321
6.2 User-System Interaction 324
6.3 Group-View Display Devices 327
6.3.1 Appropriate Use 327
6.3.2 Large Display Devices 329
7 SOFT CONTROL SYSTEM 333
7.1 General 343
7.2 Information Display 344
7.2.1 General 344
7.2.2 Selection Displays 345
7.2.3 Input Fields 346
7.2.4 Input Formats 347
7.2.5 Display Devices 350
7.3 User-System Interaction 351
7.3.1 General 351
7.3.2 Sequential Actions 353
7.3.3 Verification and Confirmation Steps 355
7.3.4 Interlocks, Lockouts and Lockins 356
7.3.5 Error Detection and Correction 357
7.3.6 Selecting Plant Variables or Components 358
7.3.7 Control Inputs 359
7.3.8 Handling Stored Data 360
7.3.9 System Response 361
8 COMPUTER-BASED PROCEDURE SYSTEM 363
8.1 Information Display 369
8.1.1 Procedure Identification 369
8.1.2 Basic Steps 370

CONTENTS (continued)

8.1.3 Warnings, Cautions, Notes, and Reference Materials 372
8.1.4 Lists 373
8.1.5 Organization of Procedures 374
8.1.6 Formatting and Screen Layout 375
8.2 Functional Capabilities 376
8.2.1 Procedure Supervision and Control 376
8.2.2 Procedure Monitoring and Assessment 377
8.2.3 Monitoring of User Actions 379
8.2.4 Planning and Implementation 380
8.3 User-System Interaction 381
8.3.1 Path Monitoring 381
8.3.2 Navigation 382
8.3.3 Help 383
8.4 CBP Hardware 384
8.5 Backup for CBPs 385
8.6 CBP Integration with Other HSI Elements 386
9 COMPUTERIZED OPERATOR SUPPORT SYSTEM 387
9.1 General 389
10 COMMUNICATION SYSTEM 391
10.1 General Communication Guidelines 395
10.2 Speech-Based Communication 396
10.2.1 General Requirements 396
10.2.2 Conventional Telephone Systems 399
10.2.3 Sound-Powered Telephone Systems 400
10.2.4 Portable Radio Transceivers 401
10.2.5 Announcing Systems 402
10.2.6 Other Communications Systems 403
10.2.7 Emergency Communications 404
10.3 Computer-Based Communication 405
10.3.1 General 405
10.3.2 Preparing Messages 406
10.3.3 Sending Messages 407
10.3.4 Receiving Messages 409

PART III: Workstation and Workplace Design

11 WORKSTATION DESIGN 411
11.1 Workstation Configuration 413
11.1.1 Stand-Up Console Dimensions 413
11.1.2 Sit-Down Console Dimensions 418
11.1.3 Sit-Stand Workstations 423
11.1.4 Vertical Panels 424
11.1.5 Desk Dimensions 426
11.1.6 Chairs 428
11.2 Control and Display Device Layout 429
11.2.1 General Layout 429
11.2.2 Control-Display Integration 430
11.2.2.1 Multiple Controls, Single Display 430
11.2.2.2 Single Control, Multiple Displays 431
11.2.2.3 Dynamic Control-Display Relationships 432
11.2.3 Between-Group and Within-Group Relationships 433
11.3 Labeling and Demarcations 435

CONTENTS (continued)

11.3.1 Labels 435
11.3.1.1 Labeling Principles 435
11.3.1.2 Label Location 437
11.3.1.3 Label Content 439
11.3.1.4 Temporary Labels and Tagouts 441
11.3.1.5 Label Lettering 442
11.3.2 Demarcations 444
11.4 Panel Layout 445
11.4.1 General Panel Layout 445
11.4.2 Layout Arrangement Factors 447
11.4.3 Specific Panel Layout Design 449
12 WORKPLACE DESIGN 453
12.1 Control Room 457
12.1.1 Control Room Configuration 457
12.1.1.1 Accessibility of Instrumentation/Equipment 457
12.1.1.2 Consistency of Staffing with Equipment Layout 458
12.1.1.3 Furniture and Equipment Layout 459
12.1.1.4 Document Organization and Storage 462
12.1.1.5 Spare Parts, Operating Expendables, and Tools 463
12.1.1.6 Supervisor Access 464
12.1.1.7 Multiunit Control Rooms 465
12.1.1.8 Emergency Equipment 467
12.1.1.9 Personal Storage 469
12.1.1.10 Ambience and Comfort 470
12.1.1.11 Crew Coordination 471
12.1.1.12 HSI Upgrades 472
12.1.2 Control Room Environment 473
12.1.2.1 Temperature and Humidity 473
12.1.2.2 Ventilation 474
12.1.2.3 Illumination 475
12.1.2.4 Emergency Lighting 479
12.1.2.5 Auditory Environment 480
12.2 Local Control Stations 482
12.2.1 Labeling 482
12.2.1.1 Placement of Labels 482
12.2.1.2 Label Design 484
12.2.1.3 Label Content 486
12.2.2 Information Display 487
12.2.2.1 Gauges/Meters 487
12.2.2.2 CRT Displays 488
12.2.2.3 Valve Position Indication 489
12.2.3 Controls 490
12.2.3.1 General 490
12.2.3.2 Manual Valves 491
12.2.4 Communication 492
12.2.4.1 Loudspeakers 492
12.2.4.2 Public Address/Pager Stations 493
12.2.4.3 High Noise Areas 494
12.2.4.4 Two-Way Communication Systems 495
12.2.4.5 Administrative Considerations 496
12.2.5 Environment 497

CONTENTS (continued)

12.2.5.1 Heat 497
12.2.5.2 Cold 500
12.2.5.3 Noise 502
12.2.5.4 Lighting 503
12.2.5.5 Accessibility 504
12.2.5.6 Vibration 505

PART IV: HSI Support

13 MAINTAINABILITY OF DIGITAL SYSTEMS 507
13.1 General 511
13.1.1 Minimizing Maintenance Demands 511
13.1.2 Continuous Operation and On-Line Maintenance 513
13.1.3 Supporting the Operator Role in Maintenance 514
13.1.4 Protecting Personnel from Hazards 515
13.1.5 Protecting Equipment and Components from Hazards 516
13.2 Instrument Cabinets and Racks 517
13.3 Equipment Packaging 518
13.3.1 General 518
13.3.2 Modularization 519
13.3.2.1 General 519
13.3.2.2 Logical Flow Packaging 521
13.3.2.3 Circuit Packaging 522
13.3.2.4 Component Packaging 523
13.3.2.5 Printed Circuit Boards 524
13.3.3 Layout 525
13.3.3.1 Module Accessibility 525
13.3.3.2 Grouping 526
13.3.4 Mounting 527
13.4 Fuses and Circuit Breakers 528
13.5 Labeling and Marking 529
13.6 Adjustment Controls 531
13.7 Test Points and Service Points 533
13.7.1 General 533
13.7.2 Location, Arrangement, and Marking 534
13.7.3 Accessibility 536
13.8 Test Equipment 537
13.8.1 General 537
13.8.2 Automatic Test Equipment 538
13.8.2.1 General 538
13.8.2.2 Test Intervals 539
13.8.2.3 Bypasses for Plant and Test Equipment 540
13.8.2.4 Failure Indications 541
13.8.2.5 Display of Test Results 542
13.8.3 Test Equipment Hardware 543
13.8.3.1 General 543
13.8.3.2 Portable Test Equipment 544
13.8.3.3 Built-In Test Panel 545

CONTENTS (continued)

APPENDIX A: High-Level Human-System Interface Design Review Principles A-1

APPENDIX B: Design Process Guidelines B-1

GLOSSARY G-1

INDEX I-1

FIGURES

1.A Information display characterization 1
1.1 Placement of heading above data fields 26
1.2 Placement of heading adjacent to data fields 26
1.3 Example of a horizontal bar chart 28
1.4 Example of a deviation bar chart 29
1.5 Example of a segmented bar chart 30
1.6 Example of a linear profile chart 33
1.7 Example of a segmented curve graph 34
1.8 Example of a mimic display 38
1.9 Graduation dimensions for 3-foot viewing distance 54
1.10 Zone markings 84
2.1 Examples of broad and shallow menu structures 125
2.2 Layered and tiled windows 171
2.3 Example of different applications with separate menu bars 176
2.4 Example of figure animation 177
2.5 Examples of open window indications 178
3.1 Control operation stereotypes for the U.S. population 220
3.2 Basic QWERTY keyboard layout 223
3.3 Numeric keypad layouts 224
3.4 Cursor control key layouts 224
3.5 Recommended dimensions for unguarded and non-recessed pushbuttons 234
3.6 Recommended dimensions for legend pushbuttons 236
3.7 Shape-coded rotary controls 238
3.8 High-torque J-handle dimensions 239
3.9 Key-operated control dimensions 241
3.10 Recommended dimensions for rotary controls with finger stops and skirts 243
3.11 Recommended dimensions for rotary selector switches 244
3.12 Recommended dimensions for discrete thumbwheel controls 246
3.13 Recommended dimensions for slide switches 247
3.14 Recommended dimensions for toggle switches 248
3.15 Recommended dimensions for rocker switches 250
4.A Conventional alarm system 251
4.B Advanced alarm system 252
4.C Alarm system functional elements 253
4.D Alarm suppression 257
7.A Two typical displays for selecting variables or components (with on-screen cursor) 335
7.B Soft control input field is integral with selection display 336
7.C Soft control input field is a window within the selection display 337
7.D Soft control input field and selection display are on separate display devices 338
11.1 Reach capabilities and control height for two stand-up consoles 413
11.2 Display height and orientation relative to a standing user's line of sight 416
11.3 Reach capabilities for sit-down consoles 418
11.4 Display height and orientation relative to a seated user's line of sight 419
11.5 Reach and visual range related to lateral and forward distance from center point 421
11.6 Leg- and foot-room dimensions 422
11.7 Control height 424
11.8 Display height 425
11.9 Recommended desk dimensions 427

FIGURES (continued)

11.10 Position of control actuator and associated display 429
11.11 Association by grouping 429
11.12 Controls and displays in rows 433
11.13 Two rows of displays with a single row of controls 434
11.14 Example of good panel labeling 435
11.15 Demarcation lines 444
11.16 Color shading 446
11.17 Example of a mirror-image arrangement of controls and displays 447
11.18 Measurement of minimum separation between controls 449
12.1 Spacing of equipment to accommodate seated users 460
12.2 Equipment-to-equipment distances: single person and more-than-one-person spaces 460
12.3 Voice level as a function of distance and ambient noise level 480
12.4 Acceleration/frequency combinations and the accuracy of number reading and manual tracking 506

TABLES

1.1 Display formats for representative user tasks 9
1.2 Index heights for various viewing distances 55
1.3 Associations and related characteristics for colors typically used in panel design 61
1.4 Representative set of candidate colors for use in panel design 62
1.5 Information grouping principles 75
2.1 Dialogue formats for representative user tasks 102
2.2 Functions for the control of processing commands 110
2.3 Functions for the control of entering information 111
2.4 Maximum and preferred system response times 160
2.5 Reducing navigation demands in large displays 169
2.6 Uses of HSI flexibility 208
3.1 Control and input devices for human-computer interaction 217
3.2 Advantages and disadvantages of various types of coding 222
4.A Alarm processing approaches 255
4.1 Shared alarm considerations 273
6.1 Appropriate use of group-view display devices 328
7.1 Different types of interruptions or terminations for transaction sequences 354
8.A Levels of automation of procedure functions 367
11.1 Anthropometric data used to set limits for equipment dimensions 414
11.2 Relative legibility of color combinations 442
11.3 Minimum separation distances for controls 451
12.1 Nominal illumination levels for various tasks and work areas 475
12.2 Maximum task area luminance ratios 476
12.3 Recommended workplace reflectance levels 477
12.4 Surface color reflectance values 478
12.5 Minimum and preferred character heights for various viewing distances 485
12.6 Ranges of WBGT for different ranges of stay times 498
12.7 Stay times for different WBGTs 499
12.8 Wind chill 500
12.9 Temperatures above which no cold effects occur 501
12.10 Range of recommended illuminances for inspection/assembly activities 503
A.1 Design review principles A-1
B.1 Examples of deficiencies in paper-based procedures B-8

PREFACE

INTRODUCTION

The U.S. Nuclear Regulatory Commission (NRC) staff reviews the human factors engineering (HFE) aspects of nuclear power plants in accordance with the *Standard Review Plan* (NUREG-0800). Detailed design review procedures are provided in the *HFE Program Review Model* (NUREG-0711). As part of the review process, the plant's human-system interfaces (HSIs) are evaluated.

The HSIs are the parts of a nuclear power plant with which personnel interact in performing their functions and tasks. Major HSIs include alarms, information displays, and controls. These are other types of HSIs are described in the next section. Each type of HSI is made up of hardware and software components and is characterized in terms of its important physical and functional characteristics. The review guidelines contained in this document address these physical and functional characteristics of HSIs. Since these guidelines only address the HFE aspects of design and not other related considerations, such as instrumentation and control and structural design, they are referred to as HFE guidelines.

Personnel use of HSIs is influenced directly by (1) the organization of HSIs into workstations (e.g., consoles and panels); (2) the arrangement of workstations and supporting equipment into facilities such as a main control room, remote shutdown station, local control station, technical support center, and emergency operations facility; and (3) the environmental conditions in which the HSIs are used, including temperature, humidity, ventilation, illumination, and noise. HFE guidelines are provided in this document for the review of these design considerations as well.

As per the review procedures described in NUREG-0711, the guidelines contained in this document can be used to review the design of HSIs and review a design-specific HFE guidelines document or style guide.

DESCRIPTION OF THE HFE GUIDELINES

The HFE guidelines are organized into four basic parts, which are divided into sections. Part I contains guidelines for the basic HSI elements: information display, user-interface interaction and management, and controls. These elements are used as building blocks to develop HSI systems to serve specific functions. The guidelines address the following aspects of these HSI elements:

- Information Display – This section provides HFE guidelines for the review of visual displays. Following a section of general guidelines, guidelines are provided in top-down fashion, beginning with display formats (such as mimic displays and trend graphs), display format elements (such as labels, icons, symbols, color, text, and coding), data quality and update rate, and display devices (such as video display terminals and large board displays).
- User-Interface Interaction and Management – This section provides HFE guidelines for the review of the modes of interaction between plant personnel and the HSI. Topics include dialogue formats (such as menus, direct manipulation, and command language), navigation, display controls, entering information, system messages, and prompts. This section also contains guidelines concerning methods for ensuring the integrity of data accessed through the user interface. Guidelines cover prevention of inadvertent change or deletion of data, minimization of data loss due to computer failure, and protection of data, such as setpoints, from unauthorized access.
- Controls – This section provides HFE guidelines for the review of information entry, dialogue types, display control, information manipulation, and system response time. Review guidelines are also

provided for conventional control devices such as pushbuttons and various types of rotary controls. Considerations of display-control integration are also included here.

Part II contains the guidelines for reviewing seven systems: alarm system, safety function and parameter monitoring system, group-view display system, soft control system, computer-based procedure system, computerized operator support system, and communication system. The guidelines include the functional aspects of the system, as well as any unique considerations for display, user-system interaction, and control that may be needed to review the system. The guidelines address the following aspects of these HSI systems:

- Alarm System – This section provides HFE guidelines for the review of alarm system design implementation. The guidelines address the selection of alarm conditions, choice of setpoints, alarm processing, alarm availability (such as filtering and suppression of alarms), unique aspects of the display of alarm information (such as organization, coding, and alarm message content), and alarm controls.
- Safety Function and Parameter Monitoring System – This section provides HFE guidelines for the review of displays of critical safety functions and safety parameters.
- Group-View Display System – This section provides HFE guidelines for the review of group-view displays, including their functional characteristics and user-system interaction aspects, as well as their physical characteristics.
- Soft Control System – This section provides HFE guidelines for the review of the information display and user-system interaction aspects of soft control systems.
- Computer-Based Procedure System – This section provides HFE guidelines for the review of computer-based procedure systems, including the representation of information, the functional capabilities, users' interaction with the systems, backup provisions, and the integration of such system with other HSI elements.
- Computerized Operator Support System – This section provides HFE guidelines for the review of the aids provided to personnel for situation analysis and decision making. Guidelines are provided that address functional requirements such as explanation and simulation facilities, and the desirable characteristics of their user interfaces.
- Communication System – This section provides HFE guidelines for the review of speech and computer-mediated communication between plant personnel, e.g., preparing, addressing, transmitting, and receiving messages.

Part III provides guidelines for the review of workstations and workplaces. Workstations, including consoles and panels, are locations where HSIs are integrated together to provide an area where plant personnel can perform their tasks. Workstations are located at workplaces, such as the main control room and remote shutdown facilities. The guidelines address the following:

- Workstation Design – This section provides HFE guidelines for the review of the design of workstation features such as control-display integration and layout, labeling, and ergonomics, e.g., vision and reach.
- Workplace Design – This section provides HFE guidelines for the review of general workplace considerations. Guidelines are provided both for the control room and for operator interface areas out in the plant. The guidelines address design features such as the overall layout of the workstations and other equipment such as group-view displays within the workplace, provision of support equipment

such as ladders or tools, and environmental characteristics including temperature, ventilation, illumination, and noise

Part IV provides guidelines for the review of HSI support, i.e., maintaining digital systems. The guidelines address the following:

- Maintainability of Digital Systems – This section provides HFE guidelines for the review of the maintainability aspects of digital systems.

Each of the sections contains an HSI characterization and design review guidelines for the HSI topic addressed. A characterization is a description of the characteristics and functions of the HSI topic area that are important to human performance. The characterizations provide a conceptual framework for indicating the specific aspects of the HSI design for which information should be obtained and reviewed. The characterizations are sometimes broader in scope than the HFE guidelines themselves. This exists when a particular aspect of a topic was identified as important to human performance, but there was not a sufficient technical basis upon which to develop detailed design review guidelines.

The individual guidelines are presented in the standardized format shown below.

1.1-1 Display Screen Partitioning for HSI Functions
A standard display screen organization should be evident for the location of various HSI functions (such as a data display zone, control zone, or message zone) from one display to another.
Additional Information: Consistent display formats will help establish and preserve user orientation. Reserved screen areas, for example, might be used for a display title, alarms, display control options, instructions, error messages, and menus. Display formats should be consistent with accepted usage and existing user habits.[5908,0700]

Each guideline is composed of the following parts:

Guideline Number – Within sections/subsections, individual guidelines are numbered consecutively from 1 to n. Each guideline has a unique number that indicates its section/subsection location, followed by a dash and then its serial number. For example, in Guideline 1.1-1, Display Screen Partitioning for HSI Functions, the "1.1" reflects its location in Section 1.1, General Display Principles, and the "-1" indicates that it is the first guideline in the section.

Guideline Title – Each guideline has a unique, descriptive title.

Review Criterion – Each guideline contains a statement of an HSI characteristic with which the reviewer may judge the HSI's acceptability. The criterion is not a requirement, and characteristics discrepant from the review criterion may be judged acceptable as per the procedures in the review process.

Additional Information – For many guidelines, additional information is provided which may address clarifications, examples, exceptions, details regarding measurement, figures, or tables. This information is intended to assist the reviewer in the interpretation or application of the guideline.

Source – The source document(s) from which the guideline was developed is shown in superscript, according to the suffix number of the NUREG, NUREG/CR, or technical report number (see below).

SUPPORTING APPENDICES

This document contains two appendices that provide additional guidelines.

Appendix A provides High-Level Human-System Interface Design Review Principles. These principles represent generic HSI characteristics necessary to support personnel performance. While these principles are not detailed review *guidelines*, they serve several purposes. First, they were used to develop many of the detailed review guidelines in this document (see source documents). Second, as general principles, they can be used to support the evaluation of aspects of the HSI not well defined by the detailed guidelines. Thus, for example, they can be used in reviewing novel HSI designs, such as display formats not identified in the guidelines. Third, they can support the evaluation of the significance of individual discrepancies in the guideline.

Appendix B contains some additional guidelines for selected HSI topics that address important considerations in the design of those topics. The purpose of these guidelines is explained below.

The guidelines in the main sections of this document address the physical and functional characteristics of HSIs and not the unique design process considerations that may be important. The guidelines were based on a technical basis described in the source documents. However, in the development of the guidelines, there were aspects of the design of HSIs that were found to be important to human performance, but for which there was not a sufficient technical basis to develop detailed guidelines. Until the technical basis improves to the point where detailed guidelines can be developed, these issues can be addressed on a case-by-case basis during specific reviews. To support the latter, special guidelines were developed addressing these design process considerations. The guidelines are contained in Appendix B for information displays, user interface interaction and management, and computer-based procedure systems.

DESIGN REVIEW SOFTWARE

In addition to a hard-copy document, the guidelines are also available in a computer-based design review application, referred to as the Interactive Design Evaluation Aid. The application simplifies many design review and document maintenance tasks, such as guideline access, HSI review, editing, compilation of individual guidelines for a specific review, and incorporation of new guidelines.

Guideline Source Documents

0700 U.S. Nuclear Regulatory Commission (1981). *Guidelines for Control Room Design Reviews* (NUREG-0700). Washington, D.C.: U.S. Nuclear Regulatory Commission.

0800 U.S. Nuclear Regulatory Commission (1996), *Standard Review Plan* (NUREG-0800, Rev. 1), Washington, D.C.: U.S. Nuclear Regulatory Commission.

2090 Stubler, W. and O'Hara, J. (1996). *Group-view Displays: Functional Characteristics and Review Criteria* (BNL Technical Report E2090-T4-4-12/94, Rev. 1). Upton, New York: Brookhaven National Laboratory.

5908 O'Hara, J., Brown, W. Baker, C, Welch, D., Granda, T, and Vingelis, P. (1994). *Advanced Human-System Interface Design Review Guideline* (NUREG/CR-5908, Vol. 2). Washington, D.C.: U.S. Nuclear Regulatory Commission.

6105 O'Hara, J., Brown, W., Higgins, J., and Stubler, W. (1994). *Human Factors Engineering Guidelines for the Review of Advanced Alarm Systems* (NUREG/CR-6105). Washington, D.C.: U.S. Nuclear Regulatory Commission.

6146 Brown, W., Higgins, J., and O'Hara, J., (1994). *Local Control Stations: Human Engineering Issues and Insights* (NUREG/CR-6146). Washington, D.C.: U.S. Nuclear Regulatory Commission.

6633 O'Hara, J., Higgins, J., and Kramer, J. (2000). *Advanced Information Systems: Technical Basis and Human Factors Review Guidance* (NUREG/CR-6633). Washington, D.C.: U.S. Nuclear Regulatory Commission.

6634 O'Hara, J., Higgins, J., and Kramer, J. (2000) *Computer-Based Procedure Systems: Technical Basis and Human Factors Review Guidance* (NUREG/CR-6634). Washington, D.C.: U.S. Nuclear Regulatory Commission.

6635 Stubler, W., O'Hara, J., and Kramer, J. (2000) *Soft Controls: Technical Basis and Human Factors Review Guidance* (NUREG/CR-6635). Washington, D.C.: U.S. Nuclear Regulatory Commission.

6636 Stubler, W., Higgins, J., and Kramer, J. (2000) *Maintainability of Digital Systems: Technical Basis and Human Factors Review Guidance* (NUREG/CR-6636). Washington, D.C.: U.S. Nuclear Regulatory Commission.

6684 Brown, W., O'Hara, J., and Higgins, J. (1999). *Advanced Alarm Systems Guidance Revision and Technical Basis* (NUREG/CR-6684). Washington, D.C.: U.S. Nuclear Regulatory Commission

6690 O'Hara, J., Brown, W., and Stubler, W. (2002). *Human-System Interface Management: Human Factors Review Guidance* (NUREG/CR-6690). Washington, D.C.: U.S. Nuclear Regulatory Commission.

6835 Brown, W. (2001). *Update of NUREG-0700 Control Room and Work Place Environment Review Guidance* (BNL Technical Report E6835-T5-1-6/01). Upton, New York: Brookhaven National Laboratory.

5680 Echeverria, D et al. (1994). *The Impact of Environmental Conditions on Human Performance* (NUREG/CR-5680). Washington, D.C.: U.S. Nuclear Regulatory Commission

1472 U.S. Department of Defense (2000). *Human Engineering Design Criteria for Military Systems, Equipment and Facilities* (MIL-STD 1472F). Washington, D.C.: U.S. Department of Defense.

3659 Kinkade, R.G. and Anderson, J. (1984). *Human Factors Guide for Nuclear Power Plant Control Room Development* (EPRI NP-3659). Electric Power Research Institute, Palo Alto, CA.

ACRONYMS

ACR	advanced control room
ANSI	American National Standards Institute
ARP	alarm response procedure
ATE	automated test equipment
CBP	computer-based procedure
CIE	Commission Internationale de l'Eclairage
COL	combined operating license
COSS	computerized operator support system
CR	control room
CRT	cathode ray tube
DCRDR	detailed control room design review
DRG	Design Review Guideline
EMI	electromagnetic interference
EOF	emergency operations facility
EOP	emergency operating procedure
EPRI	Electric Power Research Institute
FCC	Federal Communications Commission
HED	human engineering discrepancy
HFE	human factors engineering
HFE PRM	Human Factors Engineering Program Review Model
HRA	human reliability analysis
HSI	human-system interface
I&C	instrumentation and control
KBS	knowledge-based system
LCS	local control station
LED	light-emitting diode
LOS	line of sight
MCR	main control room
MFTA	modulation transfer function area
MPCD	minimum perceptible color difference
MUX	multiplexer
NPP	nuclear power plant
NRC	U.S. Nuclear Regulatory Commission
P&ID	piping and instrumentation diagram
PBP	paper-based procedure
PRA	probabilistic risk assessment
RF	radio frequency
SAR	safety analysis report
SDCV	spatially-dedicated, continuously visible display
SGTR	steam generator tube rupture
SPDS	safety parameter display system
TMI	Three Mile Island
TSC	technical support center
UCS	uniform color space
UHF	ultra high frequency
URD	utility requirements document
V&V	verification and validation
VDU	video display unit
WBGT	wet-bulb globe temperature

Part I
Basic HSI Elements

SECTION 1: INFORMATION DISPLAY

1 INFORMATION DISPLAY

Information is at the center of human performance in complex systems. This section addresses the way in which information is presented by a display system.

Information displays are built around information requirements; i.e., the information operators need to monitor and control the plant. The determination of what information is needed is referred to as information requirements analysis.

While requirements identify what information is needed by the user, the way in which that information is presented is called information representation, and is composed of the following considerations: Formats, elements, page, networks, data quality and update rates, and display devices (see Figure 1.A). Display formats are the types of information presentations that designers select to convey information to operators. Examples are trend displays and piping and instrumentation displays. Formats are made up of display elements, such as alphanumeric characters, icons, arrows, and axes. An important consideration when using information is its quality (how valid the information is) and update rate (how current the information is). Designers will frequently group several formats together to form display pages, i.e., the information contained on one display screen. NPPs may have hundreds or thousands of such pages within the plant information network and operators choose the pages they want to view on the available display devices, such as CRTs. CRs also contain devices that are dedicated to display specific parameters, such as meters. Each of these specific aspects of information display is described below. General guidance for reviewing information displays is given in Section 1.1.

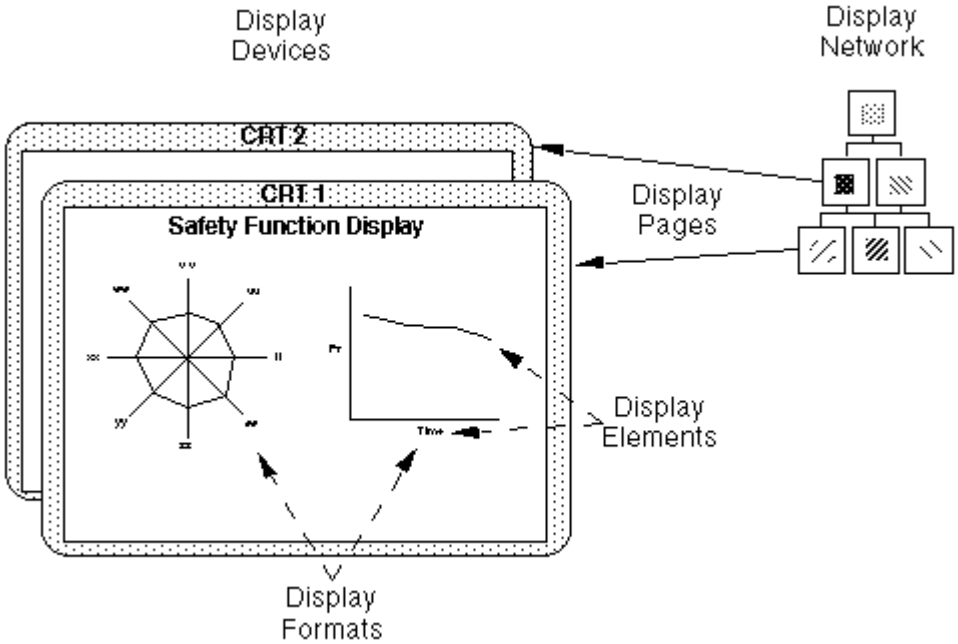

Figure 1.A Information display characterization (not shown is data quality and update rates)

DISPLAY FORMATS

Display format refers to methods of information presentation consisting of an organized arrangement of smaller display elements. They are the most significant "unit of analysis" of the information system because the selection of format greatly influences the ability of operators to easily and correctly

understand the information presented. Display formats range in complexity from simple, such as data fields and tables, to more complicated forms, such as configural and mimic displays. The ability of computer graphics to portray an essentially limitless set of novel graphic forms has offered great possibilities to provide operators with enhanced representations of the plant. The formats addressed in the design review guidelines are:

Continuous text displays

This format consists of alphanumeric character strings (e.g., words and numbers) arranged in uninterrupted linear arrays, such as sentences and paragraphs. Examples include a text-based description of a plant system and an instructional step in a computer-based procedure display. Review guidelines are presented in Section 1.2.1.

Tables and lists

A table is a display containing alphanumeric characters arranged by rows and columns. A list is a display containing alphanumeric strings arranged in a single column by rows. Review guidelines are presented in Section 1.2.2.

Data forms and fields

A data field is a space in a display containing information (e.g., the current value of a variable). Some data fields may accept input entered by the user. A data form is a display containing one or more data fields. Review guidelines are presented in Section 1.2.3.

Bar charts and histograms

A bar chart is graphic figure in which numeric quantities are represented by the linear extent of parallel lines (or bars), either horizontally or vertically. A histogram is a type of bar chart used to depict the frequency distribution for a continuous variable. The variable may be grouped into classes. Review guidelines are presented in Section 1.2.4.

Graphs

A graph is a display that represents the variation of a variable in comparison with that of one or more other variables. For example, pressure may be plotted as a function of temperature. Review guidelines are presented in Section 1.2.5. Certain types of graphs (see Integral and Configural Displays, below) use emergent features to portray higher-level information; review guidelines for such displays are given in Section 1.2.10.

Pie charts

A pie chart is a circular chart divided into sections (as pieces of a pie) to represent graphically the relative proportions of different parts of a whole. The segments may represent magnitudes or frequencies. Review guidelines are presented in Section 1.2.6.

Flowcharts

A flowchart is a diagram that illustrates sequential relations among elements or events. Flowcharts are often shown as boxes connected by arrows. Review guidelines are presented in Section 1.2.7.

Mimics and diagrams

A mimic is a display format combining graphics and alphanumerics used to integrate system components into functionally oriented diagrams that reflect component relationships. For example, a mimic display may be used to provide a schematic representation of a system. A diagram is a special form of a picture in which details are only shown if they are necessary for a task. For example, an electrical wiring diagram

for a facility would show wiring but not necessarily furniture or plumbing. Review guidelines are presented in Section 1.2.8.

Maps

A map is a graphical representation of an area or a space, such as the layout of a room or a facility. Review guidelines are presented in Section 1.2.9.

Integral and Configural Displays

The quantity of data presented in the control room can, at times, overload the operator. To lower the workload associated with extracting meaningful information from data, displays may be designed to help integrate data into more meaningful units of information. These displays map low-level data, process constraints, and relevant performance goals into the appearance and dynamic behavior of a graphical element so that this information is readily available. There are two types of these displays, integral and configural, which differ in how the relationships among data are represented.

Integral displays show information in such a way that the individual parameters used to generate the display are not represented in it. For example, a display might provide information on overall system status by the appearance of an icon. The icon may change appearance based on computations involving lower-level parameters, but the parameter values themselves are not presented.

In configural displays, the relationships among parameters are represented as emergent features of a graphical element. (An *emergent feature* is a global perceptual feature that is produced by the interactions among individual lines, contours, and shapes). In contrast to integral displays, information about the individual parameters is also available in the display. Configural displays often use simple graphic forms, such as a polygon. Information that could be presented by separate display formats is integrated into a single format in which each of the separate pieces of information is represented, for example, by the distance of a polygon's vertex from its center. In addition, the geometric shape of the polygon provides a high-level summary (the emergent feature).

Review guidelines for both of these display types is provided in Section 1.2.10.

Graphic instrument panels

These are formats in which graphical objects are arranged to resemble instruments in a control panel. For example, an individual indicator may appear as a circular meter containing a numerical scale and an indicating needle. Review guidelines are presented in Section 1.2.11.

Speech displays

These are displays that provide information in the form of human speech (either computer-generated or a recorded human voice). Messages are conveyed to the user through audio devices, such as speakers and headsets. Review guidelines are presented in Section 1.2.12.

DISPLAY ELEMENTS

Display elements are the building blocks of the display formats. The following display elements are commonly used in computer-based systems:

Alphanumeric characters

These are symbols consisting of letters, digits, and usually other symbols, such as punctuation marks. Review guidelines are presented in Section 1.3.1.

1 INFORMATION DISPLAY

Abbreviations and acronyms

An abbreviation is a shortened form of a word or phrase used for brevity (e.g., the word “pressure” might be abbreviated as “press”). An acronym is a word formed from the initial letter(s) of each of the successive or major parts of a compound term. For example, the acronym SART is sometimes used to represent the alarm system control operations: silence, acknowledge, reset, and test. Review guidelines are presented in Section 1.3.2.

Labels

A label in a descriptor containing one or more character strings that is intended to support users in identifying structures or components. Review guidelines are presented in Section 1.3.3.

Icons and symbols

An icon is a pictorial, pictographic, or other nonverbal representation of objects or actions. A symbol is a representation of something by reason of relationship, association, or convention. Symbols used in information displays may be alphanumerical characters or abstract shapes. Review guidelines are presented in Section 1.3.4.

Numeric data

These are data represented in numerical form (as opposed to text form). Examples include numerical representations of plant variables or control setpoints. Review guidelines are presented in Section 1.3.5.

Scales, axes, and grids

Scales, axes, and grids are used to graphically represent data. Axes are the graphical representation of orthogonal dimensions in the form of lines (e.g., the horizontal and vertical axes of a plot may be the X and Y dimensions, respectively). A scale is a graduated series of demarcations indicating the divisions of an axis. A grid is a network of uniformly spaced horizontal and vertical lines for locating points by means of coordinates. Review guidelines are presented in Section 1.3.6.

Borders, lines, and arrows

Borders, lines, and arrows are basic elements used to present information graphically. Lines are used to connect objects or to provide a demarcation between objects. A border is a set of demarcation lines that frame an object or group of objects. Arrows are lines that indicate direction. Review guidelines are presented in Section 1.3.7.

Color

Color is an aspect of objects or light sources that may be described in terms of hue, lightness (or brightness), and saturation. Coding based on the use of color is an important means for representing information in displays. Review guidelines are presented in Section 1.3.8.

Size, shape, and pattern coding

These are three methods for coding information in graphical displays. Size coding allows objects to be compared and contrasted based on relative size. Shape coding allows objects to be compared and contrasted based on similarities and differences in their outlines (shape). Pattern coding supports comparisons and contrasts of objects based on similarities in such characteristics as size, color, position, and orientation. Review guidelines are presented in Section 1.3.9.

Highlighting by brightness and flashing

Highlighting is a means of directing the user's attention to a feature of the display. Highlighting that is based on brightness attempts to increase an object’s salience by making it appear brighter than other

objects. Flashing increases salience by increasing and decreasing in alteration the brightness of an object or its background. Review guidelines are presented in Section 1.3.10.

Auditory coding

This is a type of information coding that conveys meaning through the use of sounds, such as auditory tones. Review guidelines are presented in Section 1.3.11.

DATA QUALITY AND UPDATE RATE

The ability of personnel to use information depends to a great degree upon the quality of the data presented, including the frequency with which it is updated. Data quality considerations include the ways in which data from plant sensors are processed and checked for accuracy (e.g., analytical redundancy and data verification). It also includes the ways in which data quality (i.e., accuracy) is communicated to the user. Data update rate refers to the frequency with which data sensors are sampled and the contents of a display are refreshed. Review guidelines are presented in Section 1.4.

DISPLAY PAGES

Display pages are defined sets of information intended to be presented as a single unit. Typical NPP display pages may combine several different formats on a single video display unit (VDU) screen, such as combining bar charts and digital displays within a representation of a piping and instrumentation diagram. The content of a display page, i.e., the integration of formats that make up the page, is usually intended to provide an organized view of some aspect of the process. For example, a page may provide a high-level status overview of the primary system. Display pages typically have a label and designation within the computer system so they can be accessed by operators as a single "display." Review guidelines are presented in Section 1.5.

DISPLAY DEVICES

Display devices are the media used to present information to personnel. They include computer-based and conventional devices and have characteristics important to personnel performance, such as resolution, viewing angle, number, and placement within the HSI. The following are devices commonly used to present information in HSIs:

Video display units

A video display unit (VDU) is an electronic device for the display of visual information in the form of text and/or graphics. Examples include CRTs and flat panel displays (e.g., light-emitting diode panels, plasma panels, thin film electroluminescent panels, electrochromics, electrophoretic panels, and liquid crystal panels). Review guidelines are presented in Section 1.6.1.

Large-screen displays

A large-screen display is a device, which due to its large size, can be simultaneously viewed from multiple workstations and locations in a control room. Review guidelines are presented in Section 1.6.2.

Printers, recorders, and plotters

These are devices that present information in a hardcopy (e.g., paper or other media) form. A printer is a device that writes output data from a system. Recorders and plotters are used to write trend data in graphical form. Review guidelines are presented in Section 1.6.3.

Meters

A meter is an indicator that typically features a numerical scale and a needle. Two types of meters are fixed-scale (i.e., the needle moves across the scale) and moving-scale (i.e., the scale moves behind the needle). Review guidelines are presented in Section 1.6.4.

Light indicators

These are display devices containing lamps that indicate status or states through the presence or absence of illumination. For example, an illuminated light indicator may be used to show that a breaker is closed. Review guidelines are presented in Section 1.6.5.

Numeric readouts

A numeric readout is a display device that presents data as a string of numerals (digits). Review guidelines are presented in Section 1.6.6.

DISPLAY NETWORKS

Display network refers to an entire set of display pages within an information system. Complex systems, such as nuclear plants, are usually represented by many graphic displays. In fact, for new plants the numbers of display pages is more typically in the hundreds and thousands. To perform their functions and tasks, operators must access these pages. When the number of pages is large, knowing where information is located can become difficult. Therefore, the organizational structure of the display network is an important consideration for personnel performance because users must have a good understanding of this structure to engage in display navigation tasks.

Three commonly used display network structures are hierarchical, relational, and sequential. Each is briefly described below.

Hierarchical Structure

In a hierarchical structure, information is organized like an inverted tree in which the lower branches provide increasingly specific categories related to the more general categories contained in the higher branches and trunk. Typically, each point or node of the structure has one entry point from a higher-level branch, and one or more exit points to lower branches. Hierarchical structure may be described in terms of depth (number of levels in the hierarchy) and breadth (number of options per node). Hierarchical structures may represent functional or physical relationships. For example, one type of hierarchical structure commonly used in process control is based on the physical organization of plant systems. In this structure, a plant system, such as the reactor coolant system, is represented by a set of display pages that provide increasingly detailed views of specific subsystems or components. Another common type of hierarchical structure is based on plant functions, in which a high-level function, such as core heat removal, is represented by a series of display pages presenting lower-level (i.e., supporting) functions.

Relational Structure

Relational display network structures have multiple links between nodes, which are based on a variety of relationships. Unlike the hierarchical structure, each node of a relational network may have one or more entry points as well as one or more exit points.

Sequential Structure

A sequential display network structure organizes display pages in a series, often representing dependant relationships. One example is the flowchart format, which may be based on the flow of physical or organizational processes.

A specific display network may contain one or more of these structures. For example, a hierarchically structured network may also contain relational links. As another example, individual branches having sequential structures, may be contained in a network that has a different structure.

HFE review guidelines are not currently available for display network design.

In the course of developing the guidance for information systems, several considerations were identified that are important to crew performance and safety, but for which the technical basis was insufficient to develop specific HFE guidelines. These aspects of information system design should be addressed on a case-by-case basis using the design process considerations presented in Appendix B1.

1 INFORMATION DISPLAY
1.1 General Display Guidelines

1.1-1 Appropriate Display Format

The display presentation format, e.g., table, graph, or flowchart, should be consistent with tasks that the user will be performing with the displayed information (see Table 1.1).

Additional Information: Table 1.1 provides some formats and conditions for their appropriate use in the context of five representative user tasks. Display formats should be task dependent. While the table identifies several classical display formats, novel formats can be acceptable if their support for the users' tasks can be demonstrated. Since tasks can vary, advanced HSIs should provide the user with the flexibility to display information in alternative formats that reflect changes in task requirements.[5908, 0700]

Table 1.1 Display formats for representative user tasks

Representative Task	Format	Condition for Appropriate Use
Comprehending Instructions or General Descriptions	Continuous Text	General
	Lists	Series of related items
	Speech Displays	User's attention not directed toward text display
	Flowcharts	Sequential decision process with no tradeoffs
Examining and Comparing Individual Numerical Values or Text	Tables	Detailed comparisons of ordered sets of data
	Data Forms	Detailed comparisons of related sets of data items from separately labeled fields
Examining Functional Relationships of Components of a System	Mimics and Diagrams	General
Examining Spatial Relationships of Objects or Places	Diagrams	General
	Maps	Geographical Data
Examining and Interpreting Patterns in Numerical Data	Bar Charts	Single variable viewed over several discrete entities or at discrete intervals
	Histograms	Frequency of occurrence viewed at discrete intervals of a single variable
	Pie Charts	Relative distribution of a single variable over several categories
	Graphs	Two or more continuous variables
	Graphs: Scatterplot	Spatial distribution of data within a coordinate system

1 INFORMATION DISPLAY
1.1 General Display Guidelines

1.1-2 Display Conventions
Consistent interface design conventions should be evident for all display features (such as labels).
Additional Information: Consistent structure for data and labels should be used within and across displays. Even minor inconsistencies can distract a user and delay comprehension as the user wonders momentarily whether some apparent difference represents a real difference. Both the items on display and the displays themselves should be standardized. Although standardization is desirable, it should not take precedence over the grouping principles of frequency, sequence, locations, and importance.[5908]

1.1-3 Display Information Consistent with User Conventions
Information should be displayed consistently according to standards and conventions familiar to users.
Additional Information: The wording of displayed data, labels, and other information should incorporate the task-oriented terminology of the users, and avoid unfamiliar terms used by designers and programmers.[5908]

1.1-4 Display Information Consistent with Control Requirements
Displays should be consistent in word choice, format, and basic style with requirements for data and control entry.
Additional Information: When entry formats are consistent with display formats, users are less likely to make errors.[5908]

1.1-5 Correspondence Mapping
There should be an explicit mapping between the characteristics and functions of the system to be represented and the features of the display representation, i.e., changes in the appearance of the display form should have a one-to-one relation with the plant states it represents. These changes should result from explicit rules relating the physical form of the display and its meaning to the plant state represented.
Additional Information: Correspondence mapping addresses how well the display communicates meaningful information about the plant to operators. The physical form and functions of the display should be explicitly tied to the plant's functions and states. The display form and function must consider the instrumentation and the data processing that drive the display format. If a single display can lead to more than one interpretation, it is ambiguous and can be easily misunderstood. Changes in the graphic display should be unambiguously related to the plant's state. The same graphic change should not be associated with more than one interpretation.[6633]

1.1-6 Levels of Abstraction
Displays should provide information at the levels of abstraction necessary to meet the operators' requirements relative to their task goals.
Additional Information: Information should be presented in accord with the operator's goals and the information needed to address them.[6633]

1.1-7 Coherence Mapping
The characteristics and features of the display used to represent the process should be readily perceived and interpreted by the operator.
Additional Information: Coherence mapping addresses how comprehensible the representation is to the operator. Unambiguous relationships between the display and the process are of little value if they also are not readily perceived by the operators and easily understood.[6633]

1.1-8 Understandability of Higher-Level Information
The methods by which lower-level data are analyzed to produce higher-level information and graphical elements should be understandable to users.

Additional Information: Users must be able to judge the acceptability of higher-level information and how it relates to lower-level information.[6633]

1.1-9 User Verification of Higher-Level Information
Operators should have access to the rules or computations that link process parameters and graphical features, and to an explanation of how the information system produces higher-level information.
Additional Information: When graphical features change in ways not completely understood by operators, they should be able to access the rules that produce the graphic forms. Operators should be able to review any analysis performed by the information system.[6633]

1.1-10 Alert to Higher Level Displays
While viewing secondary (lower-level) displays, a perceptual (audible or visual) cue should be provided by the system to alert the user to return to the primary (higher-level) display if significant information in that display requires user attention.[0800]

1.1-11 Display of Goal Status
The information system should provide for global situation awareness (i.e., an overview of the status of all the operator's goals at all times) as well as supplying details about the current specific goal.
Additional Information: Situation assessment can suffer when operators focus on some information and fail to attend to other important data.[6633]

1.1-12 Display of Information to Support Planning
The HSI should present information to support users in planning for and coordinating concurrent tasks.
Additional Information: Providing information that gives advanced notification of plant conditions or the need for action can help users prioritize and plan tasks. It can also reduce the mental workload and improve the utilization of cognitive resources for primary tasks. Examples of HSI features that can provide advanced warnings and indications include: checklists and computer-based aids that allow the user to look ahead at future activities (e.g., computer-based procedures that show upcoming steps); trend and predictor displays; and alarms and displays that provide early warnings of developing conditions. This information should be presented in ways that reduce distraction, since distracting stimuli can impose high demands on attention resources.[6690]

1.1-13 Display of Future Status
The information system should support the user's ability to project future states of the system when this is required to safely operate the plant.
Additional Information: Situation assessment involves not only understanding the current state of the plant, but also projecting its future state. Displays such as trend graphs can support these projections.[6633]

1.1-14 Status at a Glance
Information display systems should allow users to immediately assess overall plant status and detect conditions that require attention without performing interface management tasks.

Additional Information: The presentation area of computer-based display devices allows only a limited amount of information to be presented at one time. If personnel are unable to view information without deliberately performing interface management tasks, they may be less willing to search for particular information. They also may be less likely to encounter the information casually, as one might when scanning a conventional control panel. This effect can interfere with awareness of developing plant conditions that have not yet exceeded the threshold of the alarm system. Without this awareness, the user may not form the intention to monitor these conditions. Salient indications of anomalies are particularly important for highly reliable automated systems, which users may fail to investigate due to their low failure rate.[6690]

1.1-15 Actual System/Equipment Status
Indications of the actual status of plant systems and equipment, as opposed to demand status, should be provided when required by the task.
Additional Information: Demand information shows that equipment has been commanded (by control settings or otherwise) to a particular state or level. It shows only what is demanded, not what is actually being realized. Status information shows the state or level actually in effect. To prevent operator confusion, it is essential that displays be identified as to whether they reflect demand or actual status.[0700]

1.1-16 Display of Parameters and Variables Important to Safety
Plant parameters and variables important to safety should be displayed in a way that is convenient and readily accessible.[0800]

1.1-17 Normal Value Reference Index
Displays should contain reference(s) to the values of normal operating condition(s).
Additional Information: With references showing normal parameter operating values, the users are more likely to notice deviations from normal conditions. In such cases, the index might be displayed as a horizontal or vertical line, or perhaps as a reference curve of some kind. For example, a horizontal line representing normal operating conditions should be superimposed on the display.[5908]

1.1-18 Critical Value Reference Index
A reference index should be included in a display when the user must compare displayed information with some critical value.
Additional Information: Indexing may be complicated in some situations, such as when a series of bar charts do not have a common measure. In such a case, it might help to use an index scheme such that bar lengths will fall in the same zone under normal conditions, so that deviations in bar length will be readily noticed by users who must monitor changing data. For example, a horizontal line might be an adequate reference index for a vertical bar graph.[5908, 0800]

1.1-19 Limit Marks for Critical Variables
Limit marks should be used to indicate operational limits for critical plants parameters.
Additional Information: Limit marks are demarcations of established limits of operation, such as those for technical specifications, process limits, and safety system actuation setpoints.[0800]

1.1-20 Choice of Status Setpoints
Setpoints used to indicate a change in status should be chosen to provide users with sufficient time to respond appropriately.

Additional Information: Status setpoints are criterion values used to indicate a change in a status of a variable, such as to indicate the approach to an unsafe operating condition. Status setpoints should be chosen specifically for their suitability for that function. Poorly chosen setpoints can result in frequent false indications or the failure to recognize a serious condition.[0800]

1.1-21 Analytical Redundancy
Analytical redundancy should be considered to help ensure the appropriateness of displayed values.
Additional Information: Analytical redundancy is the calculation of expected parameter values using a model of system performance. The expected value is then represented in the display, along with the actual value. Deviations between the two indicate some disturbance or abnormality of the system.[6633]

1.1-22 Indication of Proper Display Operation
A display feature should be provided to indicate to the user that the system is operating properly (or that a system failure has occurred).
Additional Information: Display of calendar date and time can be used to indicate whether a computer display is functioning. A built-in testing feature that is activated either automatically or by the user may be used to assess operability of the display system.[0800, 0700]

1.1-23 Indication of Display Failure
Information system failures (due to sensors, instruments, and components) should result in distinct display changes, which directly indicate that depicted plant conditions are invalid.
Additional Information: The information system should be designed so that failures in instrumentation are readily recognized by operators. When panel instruments, such as meters, fail or become inoperative, the failure should be apparent to the user (e.g., through off-scale indication). This may be more difficult to determine in complex graphics, and thus, should be carefully evaluated.[6633]

1.1-24 Annotating Displays With Time Data
When task performance requires or implies the need to assess currency of information within a display, the information should be annotated with time information.[5908]

1.1-25 Freezing Rapidly Changing Information
When task requirements dictate that current information changes be continuously viewed and the display is changing so rapidly that the information is difficult to read, the user should have the capability of simultaneously viewing the information in a supplemental 'snapshot' display (i.e., a display frozen to enhance readability) along with the continuous display.
Additional Information: For example, if a numeric data display is changing rapidly and the user finds it difficult to read, it should be possible to display a frozen, unchanging value representing the data at the point of the request. The original display should continue to be presented.[5908]

1.1-26 Freeze Feedback
If a display has a freeze capability, the display should have an obvious reminder that it is in the freeze mode.
Additional Information: It is desirable to provide this information to the user in an attention-grabbing mode, such as with a flashing message.[5908]

1.1-27 Navigational Links to Related Information
Navigational links to and from high-level and lower-levels of information and to reference and supporting information should be provided when needed for operators' tasks.[6633]

1.1-28 Grouping of Related Information

Related information should be organized into groups.
Additional Information: Information needed by the operator to accomplish a task should be grouped and perceptually related, when possible. To minimize the disadvantages of divided attention, the number of attention shifts should be minimized, both within a display page and between them.[6690, 6633]

1.1-29 Spatial Proximity for Related Information

Information that must be compared or mentally integrated should be presented in the close spatial proximity.
Additional Information: If possible, the information items should be contained in the same display page and grouped together. Spatial proximity may also be achieved by presenting the display pages in adjacent display windows or on adjacent display devices that can be viewed together.[6690]

1.1-30 Chromatic Proximity for Related Information

If information must be mentally integrated, similar color codes should be used for the information items.
Additional Information: Information items may be easier to identify if a similar color coding scheme has been applied to them. This may be particularly important if the information items are spatially separated.[6690]

1.1-31 Similar Physical Dimensions for Related Information

Information that must be compared or mentally integrated should use similar physical dimensions to convey meaning.
Additional Information: Physical dimensions are physical characteristics that are varied to convey information, such as indicating the magnitude of a variable via the length of a line versus the volume of a shape. When the same type of physical dimension is used to convey meaning then less mental workload is needed to interpret and integrate the information.[6690]

1.1-32 Similar Presentation Formats for Related Information

Information that must be compared or mentally integrated should be presented using similar presentation formats (e.g., analog versus digital).
Additional Information: Presentation format refers to analog versus digital form. Information items may be easier to identify and mentally integrate if they are presented in the same format, such as when both are in an analog form or both are presented as digital values. When information is presented in different formats (i.e., different perceptual coding is used) additional mental workload is required to translate and integrate the information.[6690]

1.1-33 Display Information in Directly Usable Form

Information should be displayed to users in directly usable form consistent with the task requirements.
Additional Information: Users should not have to convert displayed data into another form to make it useful to the ongoing task. A user should not have to transpose, compute, interpolate, or translate displayed data into other units, or refer to documentation to determine the meaning of displayed data.[5908, 0700]

1.1-34 Indication of Transformations Needed

Scale multiplication factors (i.e., powers of 10), if used, should be clearly indicated on the display.[0700]

1.1-35 Annotating Graphic Displays With Numeric Values

When precise reading of a graphic display is required, the display should be annotated with actual data values to supplement their graphic representation.

Additional Information: For example, adjacent numeric annotation might be added to the ends of displayed bars on a bar graph; numeric data might be displayed to mark the points of a plotted curve.[5908]

1.1-36 Readability Conditions
Important display elements and codes should be identifiable and readable from the maximum viewing distance and under minimal ambient lighting conditions.
Additional Information: Some pictorial patterns may be effective only when the viewing distance and lighting conditions are optimum.[5908]

1.1-37 Sensitivity
Display dynamic sensitivity should be selected to minimize the display of normal random variations in equipment performance.[0700]

1.1-38 Numeral and Letter Styles
Numeral and letter styles should be simple and consistent.
Additional Information: See Section 1.3.1, Alphanumeric Characters, for more guidelines regarding lettering style.[0700]

1.1-39 Display Flexibility
Users should be able to control the amount, format, and complexity of displayed data to meet task requirements.[5908]

1.1-40 Range of Conditions Displayed
The display system should correctly display information about the plant's safety status including severe accident symptoms.[0800]

1.1-41 Distinctive Coding of Critical Information
Distinctive means of coding/highlighting should be used when a user's attention must be directed to changes in the state of the system, critical or off-normal data, and hazardous conditions.
Additional Information: Significant changes might include discrepant data exceeding acceptable limits or data failing to meet some other defined criteria. 'Highlight' is used here in its general sense, meaning to emphasize or make prominent, and is not restricted to any particular method of display coding such as brightening or inverse video. Highlighting is most effective when used sparingly, adding emphasis to a display that is relatively uniform in appearance except for just a few highlighted items. For some purposes, location coding (i.e., displaying important items consistently in a particular location) might be a sufficient means of highlighting, as when an error message appears in a space otherwise left blank. However, auxiliary codes may still be needed to highlight important items, even if they are positioned consistently. For example, line coding by color or bolding might be used to highlight displayed paths, and/or the boxes or other graphic elements representing displayed states. (Color coding may be particularly appropriate in flowcharts, because of the effective primacy of color for guiding the visual scanning required to trace paths.)[5908]

1.1-42 Salience Levels
The salience of graphic features should reflect the importance of the information.
Additional Information: The most salient features of a graphic display should be those aspects of the representation that are most important. Less important information should not be more perceptually salient than more important information.[6633]

1 INFORMATION DISPLAY
1.1 General Display Guidelines

1.1-43 Readability of Coded Information
Coding should not interfere with the readability of displayed information.[5908]

1.1-44 Highlighting Text Displays
When critical text merits emphasis to set it apart from other text, that text should be highlighted by bolding/brightening or color coding or by some auxiliary annotation.
Additional Information: Use of capitalization as a coding technique should be limited since it reduces readability. A single word might be capitalized for emphasis, but capitalizing an extended passage should not be used for coding.[5908]

1.1-45 Graphic Display Enhancement With Text
When a graphic display contains some outstanding or discrepant feature that merits attention by a user, supplementary text should be displayed to emphasize that feature.
Additional Information: For example, a flow diagram for process control might include a current advisory message, POSSIBLE PRESSURE VALVE FAILURE, as well as appropriate graphic indications of the problem.[5908]

1.1-46 Coding Display Items Requiring Rapid Discrimination
Coding should be provided when a user must distinguish rapidly among different categories of displayed data.
Additional Information: Graphic coding methods (e.g., symbols, boxes, underlines, use of color as a background to grouped items) can greatly aid users' utilization of information.[5908, 0700]

1.1-47 Meaningful Codes
Meaningful or familiar codes should be used, rather than arbitrary codes.[5908]

1.1-48 Consistent Coding Across Displays
Consistent meanings should be assigned to codes, from one display to another.
Additional Information: When coding is not consistent, the user's task of display interpretation may be made more difficult than if no auxiliary coding were used at all.[5908, 0700]

1.1-49 Coding and Transmission Time
Coding should not increase transmission time.[5908]

1.1-50 On-Line Dictionary of Display Element Definitions
The user should have access to a dictionary that contains definitions for all display element conventions through the display or an on-line help system.
Additional Information: Definitions should be available for all symbols, icons, and coding techniques. A legend on the display may be provided for display conventions.[5908]

1.1-51 Physical Overlays
Overlays should not distract or interfere with the observation or interpretation of displayed information.
Additional Information: Mechanical overlays on VDUs should be avoided.[0800]

1.1-52 Hardcopy of VDU Displays
Users should be able to obtain an accurate and complete hardcopy of any VDU display.

1 INFORMATION DISPLAY
1.1 General Display Guidelines

Additional Information: On-line displays can offer some advantages over printed graphics, in terms of animation and highlighting. When a display is to be printed, however, it is important that limitations of the print medium can be taken realistically into account. If a printed replica of the screen does not appear satisfactory, the hardcopy should be reformatted to maintain readability and clarity.[5908, 0700]

1.1-53 Display Area
Sufficient viewing area should be provided to display all important information so that repetitive transitions between displays are not required.
Additional Information: Lack of display area is a frequent complaint. The number of VDUs in a control room often is determined before there is sufficient knowledge about what information users need for their tasks.[6690]

1.1-54 Predefined Displays
Predefined information groupings should be available.
Additional Information: Arranging displayed information may disrupt ongoing tasks or introduce new opportunities for error if the operator fails to recognize that the arrangement of displayed information has been changed. Predetermined information groupings may help reduce interface management demands.[6690]

1.1-55 Indicating Locations for Important Information
The system should support the user in identifying displays and indicators that should be monitored during upset conditions.
Additional Information: The HSI design should help users determine where to look next within the display system for changes in information that are important to their tasks.[6690]

1 INFORMATION DISPLAY
1.2 Display Formats
1.2.1 Continuous Text Displays

1.2.1-1 Standard Text Format
A standard text display format should be used from one display to another.[5908]

1.2.1-2 Consistency Between VDU-Based Text and Printed Text
VDU displays of textual data, messages, or instructions should generally follow design conventions for printed text.
Additional Information: Adoption of familiar design conventions for text display will permit users to rely on prior reading skills.[5908]

1.2.1-3 Sentences Begin with Main Topic
The main topic of each sentence should be located near the beginning of the sentence.[5908]

1.2.1-4 Clarity of Wording
Text displays should be worded simply and clearly.[5908]

1.2.1-5 Distinct Wording
Distinct words rather than contractions or combined forms should be used, especially in phrases involving negation.
Additional Information: For example, 'will not' should be used rather than 'won't.'[5908]

1.2.1-6 Concise Wording
The text should be worded concisely to aid comprehension.
Additional Information: Wording should be concise but not cryptic. Omitting articles ('the,' 'a'), prepositions ('of,' 'by') and relative pronouns ('that,' 'which,' 'who') may save some space, but may also reduce understandability.[5908]

1.2.1-7 Abbreviations Defined in Text
When words in text displays are abbreviated, each abbreviation (or acronym) should be defined in parentheses following its first appearance.
Additional Information: An on-line dictionary of abbreviations for convenient reference should be available to users.[5908]

1.2.1-8 Affirmative Sentences
Affirmative statements rather than negative statements should be used.
Additional Information: The user should be told what to do rather than what to avoid. For example, "Start the pump before opening the valve" is preferred over "Do not open the valve before starting the pump."[5908]

1.2.1-9 Active Voice
Sentences should be composed in the active rather than the passive voice.
Additional Information: Sentences in the active voice will generally be easier to understand. For example, "Press RESET to clear the screen" is preferred over "The screen is cleared by pressing RESET."[5908]

1.2.1-10 Temporal Sequence
When a sentence describes a sequence of events, it should be phrased with a corresponding word order.

Additional Information: Temporal order is preferred over reverse order, which may confuse a user. For example, "Start the pump before opening the valve" is preferred over "Before opening the valve, start the pump."[5908]

1.2.1-11 Minimum Number of Displayed Lines
When a user must read continuous text on line, at least four lines of text should be displayed at one time.
Additional Information: Four lines of text is the minimum that should be displayed when the reading material is simple in content. If the content is more complex, or if a reader will need to refer frequently to previous material, then more lines of text should be displayed.[5908]

1.2.1-12 Line Length
Continuous text should be displayed in wide columns, containing at least 50 characters per line.
Additional Information: When space for text display is limited, a few long lines of text rather than many short lines of text should be displayed. Line lengths of less than 50 characters result in slower reading times, but line lengths from 50 to 80 characters do not produce differences in reading time.[5908]

1.2.1-13 Minimal Hyphenation
In display of textual material, words should be kept intact, with minimal breaking by hyphenation between lines.
Additional Information: Text is more readable if each word is entirely on one line.[5908]

1.2.1-14 Conventional Punctuation
Conventional punctuation should be used in textual display.
Additional Information: Sentences, for example, should end with a period.[5908]

1.2.1-15 Inter-Word Spacing
Consistent spacing between the words of displayed text should be maintained, with left justification of lines and ragged right margins. A minimum of one character width (capital N for proportional spacing) should be used between words.
Additional Information: Reading is easier with constant spacing, which outweighs the advantage of an even right margin achieved at the cost of uneven (nonproportional) spacing. Uneven spacing is a greater problem with narrow column formats than with wide columns. Uneven spacing handicaps poor readers more than good readers. Full justification slows reading time and should only be employed if it can be achieved by variable spacing, maintaining constant proportional differences in spacing between and within words, and consistent spacing between words in a line.[5908, 0700]

1.2.1-16 Inter-Line Spacing
A minimum of two stroke widths or 15 percent of character height, whichever is greater, should be used for spacing between lines of text.
Additional Information: The specified spacing is in addition to the space used for uppercase accent marks or for lower case descenders of characters.[5908]

1.2.1-17 Inter-Paragraph Spacing
Displayed paragraphs of text should be separated by at least one blank line.[5908]

1.2.1-18 Combining Text with Other Data
Text should be formatted in a few wide lines rather than in narrow columns of many short lines when space is limited owing to the display of graphics or other data.[5908]

1.2.1-19 Placing Figures Near Their Citations

When tables and/or graphics are combined with text, each figure should be placed near its first citation in the text, preferably in the same display frame.

Additional Information: Users may not bother to find and look at a figure if it is displayed separately from its citation in the text. As an exception, if a figure is cited at several points in the text, then it might be desirable to allow optional display of the figure at user request, perhaps as a temporary window overlay at each point of citation. Also, if a figure is cited at several points in printed text, and particularly if that text may be accessed at different places by its readers, then it might be desirable to group figures consistently at a particular location, such as at the end of each section.[5908]

1.2.1-20 Underlining for Emphasis

When a line is placed under an item to mark or emphasize it, the line should not impair the legibility of the item, e.g., by obscuring the descenders.[5908]

1.2.1-21 Font Coding

Within a text file or table, the use of a different font style should be preferred over the use of a different size for highlighting information.

Additional Information: It is often not possible to introduce into displayed text differences in type size large enough to be readily discernable.[5908]

1.2.1-22 Attention Symbols in Alphanumeric Displays

When a special symbol, such as an asterisk, is used to draw attention to a selected item in alphanumeric displays, the symbol should be separated from the beginning of the word by a space.[5908]

1.2.1-23 Hardcopy for Lengthy Text Displays

When a user must read lengthy textual material, that text should be available in printed form.

Additional Information: Reading lengthy text on an electronic display may be 20-30 percent slower than reading it from a printed copy.[5908]

1 INFORMATION DISPLAY
1.2 Display Formats
1.2.2 Tables and Lists

1.2.2-1 Logical Organization
Information should be organized in some recognizable logical order to facilitate scanning and assimilation.
Additional Information: If the data in the rows has order, the order should be increasing from left to right. If the data in the columns has order, the order should be increasing from top to bottom of the display. Items in lists should be arranged in a recognizable order, such as chronological, alphabetical, sequential, functional, or importance. Where no other principle applies, lists should be ordered alphabetically. It is the user's logic which should prevail rather than the designer's logic, where those are different.[5908]

1.2.2-2 Table Layout by Row and Column
A table should be constructed so that row and column labels represent the information a user has prior to consulting the table.
Additional Information: The left-most column should contain the labels for the row variables, and the top row should contain the labels for the column variables. When tables are used for reference, the reference item should be displayed in the left column, and the material most relevant for user response should be displayed in the next adjacent column.[5908]

1.2.2-3 Row and Column Labels
Each row and column should be uniquely and informatively labeled and should be visually distinct from data entries.[5908]

1.2.2-4 Labeling Units of Measurement
Labels should include the unit of measure for the data in the table; units of measurement should be part of row or column labels.[5908]

1.2.2-5 Consistent Spacing Within Tables
Consistent column and row spacing should be maintained within a table, and from one table to another. Similarly, spacing between rows should be consistent within a table and between related tables.
Additional Information: As an exception, when columns are grouped under superheadings, extra space between superheadings may help, in order to emphasize that the columns under any single superheading are related.[5908]

1.2.2-6 Minimum Column Spacing
The spacing between columns should be greater than any internal spaces that might be displayed within a tabulated data item.
Additional Information: The columns in a table should be separated by enough blank spaces, dots, or by some other distinctive feature, to ensure separation of entries within a row. When columns are not separated by vertical lines, the columns should be separated by at least two character widths.[5908, 0700]

1.2.2-7 Row Separation
In dense tables with many rows, a blank line, dots, or some other distinctive feature (to aid horizontal scanning) should be inserted after a group of rows at regular intervals.
Additional Information: For many applications, it will suffice to insert a blank line after every five rows.[5908]

1.2.2-8 Consistent Character Appearance
The font and size of alphanumeric characters should be consistent within a table and between related tables.

Additional Information: An exception to this guideline is when a word or set of characters is highlighted by varying the typeface, for example, through the use of italics or a bold font.[5908]

1.2.2-9 Justification of Alphabetic Data
Columns of alphabetic data should be displayed with left justification to permit rapid scanning.
Additional Information: As an exception, indentation can be used to indicate subordinate elements in hierarchic lists. In addition, a short list (of just four or five items) could be displayed horizontally on a single line, in the interest of compact display format, if that is done consistently.[5908]

1.2.2-10 Justification of Numeric Data
Columns of numeric data should be justified with respect to a fixed decimal point; if there is no decimal point, then numbers should be right-justified.[5908]

1.2.2-11 Arabic Numerals for Numbered List Items
Arabic rather than Roman numerals should be used when listed items are numbered.
Additional Information: Arabic numbers are more familiar to most users, and require less interpretation than Roman numerals do. The advantage of Arabic numbers becomes greater when large numbers are used.[5908]

1.2.2-12 Numbered Items Start with '1'
Item numbers should begin with one rather than zero.[5908]

1.2.2-13 Continuous Numbering in Multipage Lists
When a list of numbered items exceeds one display page, the items should be numbered continuously in relation to the first item on the first page.
Additional Information: For example, items continued on the next page should be numbered relative to the last item on the previous page.[5908]

1.2.2-14 Repeated Elements in Hierarchic Numbering
Complete numbers should be displayed for hierarchic lists with compound numbers, i.e., repeated elements should not be omitted.
Additional Information: Implicit numbering may be acceptable for tasks involving perception of list structure. Complete numbering is better, however, for tasks requiring search and identification of individual items in the list.[5908]

1.2.2-15 Single-Column List Format
Lists should be formatted so that each item starts on a new line.
Additional Information: A list should be displayed as a single column. As an exception, listing in multiple columns may be considered where shortage of display space dictates a compact format.[5908]

1.2.2-16 Marking Multiline Items in a List
When a single item in a list continues for more than one line, items should be marked in some way so that the continuation of an item is obvious.
Additional Information: A continued portion should not appear to be a separate item. Items might be separated by a blank space, or continuing lines within an item might be indented, or each item might be numbered or marked by a special symbol such as an arrow or bullet.[5908]

1.2.2-17 Vertical List Extension Beyond One Page

Where lists extend over more than one display page, the last line of one page should be the first line on the succeeding page.[5908]

1.2.2-18 Hierarchic Structure for Long Lists

For a long list, extending more than one displayed page, a hierarchic structure should be used to permit its logical partitioning into related shorter lists.[5908]

1.2.2-19 Vertical Ordering in Multiple Columns

If a list is displayed in multiple columns, the items should be ordered vertically within each column rather than horizontally within rows and across columns.[5908]

1.2.2-20 Annotating Display of Continued Data

When lists or tables are of variable length and may extend beyond the limits of one display page, the user should be informed when data are continued on another page and when data are concluded on the present page.

Additional Information: For example, incomplete lists might be marked 'continued on next page,' 'continued,' or 'more.' Concluding lists might display a note such as 'end of list' or 'end.' As an exception, short lists whose conclusion is evident from the display format need not be annotated in this way.[5908]

1 INFORMATION DISPLAY
1.2 Display Formats
1.2.3 Data Forms and Fields

1.2.3-1 Comparing Data Fields
Data fields to be compared on a character-by-character basis should be positioned one above the other.[5908]

1.2.3-2 Consistent Format Across Displays
The ordering and layout of corresponding data fields across displays should be consistent from one display to another.
Additional Information: For example, time records might be consistently punctuated with colons, as HH:MM:SS or HH:MM; dates might be shown as MMM:DD:YYYY. The convention chosen should be familiar to the prospective users.[5908, 0700]

1.2.3-3 Consistency of VDU and Hardcopy Formats
The format of a VDU data form should be similar to that of commonly used hardcopy source documents.
Additional Information: Users should be able to transfer their previous training and experience with the hardcopy format to the computer display.[5908]

1.2.3-4 Form Compatible for Data Entry and Display
When forms are used for data entry as well as for data display, the formats of these forms should be compatible.[5908]

1.2.3-5 Visually Distinct Labels and Data Entry Areas
Clear visual definition of data fields should be provided so that the data are distinct from labels and other display features.
Additional Information: Special characters (such as underlining) or graphics (such as 'boxing') should be used to delineate data fields. A broken underscore, for example, could be used to indicate the number of characters available for an entry.[5908]

1.2.3-6 Separation of Field Label and Data Entry Area
The label and the data entry area should be separated by at least one character space.[5908]

1.2.3-7 Data Field Separation
At least three spaces should appear between the longest data field in one column and the rightmost label in an adjacent column.
Additional Information: Where space constraints exist, vertical lines may be substituted for spaces for separation of columns of fields.[5908]

1.2.3-8 Justification: Data Field Labels of Equal Length
When label sizes are relatively equal, both labels and data fields should be left justified. One space should be left between the longest label and the data field column.[5908]

1.2.3-9 Justification: Data Field Labels of Unequal Length
When label sizes vary greatly, labels should be right justified and the data fields should be left justified. One space should be left between each label and the data field.[5908]

1.2.3-10 Protected Labels
Field labels should be protected from keyed entry by having the cursor skip over them automatically when a user is spacing or tabbing.

Additional Information: When a user must change a displayed form, including changes to field labels, then that user must be able to override label protection.[5908]

1.2.3-11 Highlight Active Data Entry Field
The current field to be entered should be highlighted.
Additional Information: Irrelevant objects slow perceptual processing by competing for resources. Use of highlighting makes the current data field discriminable from other data.[5908]

1.2.3-12 Data Entry Cues
If appropriate, labels should be used to help cue the user as to the expected data entry.
Additional Information: For example, "DATE (MM/DD/YYYY): __/__/__."[5908]

1.2.3-13 Label Punctuation as Entry Cue
The label for each entry field should end with a special symbol, signifying that an entry may be made.
Additional Information: A symbol should be reserved exclusively for prompting user entries.[5908]

1.2.3-14 Data Form Entry Error
Data entered that does not match the predefined format of the data form should be highlighted and signaled to the user.
Additional Information: A beep, for example, can be used to signal an error.[5908]

1.2.3-15 Distinguishing Blanks from Nulls
Blanks (keyed spaces) should be distinguished from nulls (no entry at all) in the display of data forms, where it can aid task performance.
Additional Information: Some special symbol might be adopted to denote null entry. If field delimiters are displayed to guide data entry, then it will often be sufficient simply to leave those delimiters unchanged when no entry has been made.[5908]

1.2.3-16 Labeling Groups of Data Fields
A field group heading should be centered above the labels to which it applies.[5908]

1.2.3-17 Data Field Group Separation
At least five spaces should appear between groups of data fields.[5908]

1.2.3-18 Headings and Label Indentation
When headings are located on the line above related screen fields, the labels should be indented a minimum of five spaces from the start of the heading.
Additional Information: Scanning an inquiry screen will be aided if logical groupings of fields are identified by headings (see Figure 1.1). This permits scanning of headings until the correct one is located, at which point the visual search steps down one level to the items within the grouping itself. The above guideline is intended to provide easily scanned headings.[5908]

STEAM GENERATOR LEVEL

SG# 1:

SG# 2:

SG# 3:

SG# 4:

Figure 1.1 Placement of heading above data fields

1.2.3-19 Heading Proximity to Subordinate Labels
When headings are placed adjacent to the related fields, they should be located to the left of the topmost row of related fields. The column of labels should be separated from the longest heading by a minimum of three blank spaces.
Additional Information: Scanning an inquiry screen will be aided if logical groupings of fields are identified by headings (see Figure 1.2). This permits scanning of headings until the correct one is located, at which point the visual search steps down one level to the items within the grouping itself. The above guideline is intended to provide easily scanned headings.[5908]

STEAM GENERATOR LEVEL SG# 1:

SG# 2:

SG# 3:

SG# 4:

Figure 1.2 Placement of heading adjacent to data fields

1.2.3-20 Logical Organization of Data Entry Forms
A data entry form should have a logical organization.
Additional Information: Data entry forms contain multiple fields in which the user enters information, usually via typing, to request information from the system. Logical organizations of entry fields may include conventional order (a generally accepted or customary ordering), sequence of use, frequency of use, data comparison (entries that must be compared are grouped together), functional grouping (related functions are grouped together), importance (task-critical items are located prominently), and general to specific (detailed fields proceed from more general topics, as in a hierarchical organization). Logical organizations can support user comprehension of the layout of the data entry form and facilitate its use. When it is not necessary to enter information in all fields to complete a transaction, placing the most frequently used entry fields at the top of the form can reduce the length of transitions across the data form.[6546]

1.2.3-21 Minimizing the Number of Pages for a Data Form

The number of pages in a data form required to complete a transaction should be minimized to reduce the amount of navigation.

Additional Information: Movement between individual display pages delays the transaction and causes the user to divert attention from the data entry task to the form navigation task. To reduce movement between individual pages, the number of display pages required for the completion of a transaction should be minimized by integrating required data entry fields into fewer pages.[6546]

1.2.3-22 Cursor Positioning

The cursor should be positioned at the first character location of the first data entry field upon initial presentation of a data entry form.

Additional Information: Subsequently, the cursor should be positioned at the first character location of each entry field accessed on the data form.[6546]

1.2.3-23 Movement Between Entry Fields

The user should be able to move from one entry field to the next using a simple action that requires minimal focused attention.

Additional Information: User should not have to divert attention from the data entry task to focus on the task of moving from one data entry field to another. For example, operating a tab key requires less attention and precise control than positioning a cursor using a pointing device.[6546]

1.2.4-1 Labeling Single Bars

Each bar on the display should have a unique identification label.
Additional Information: The label provides a positive identification of the parameter each bar represents. A user should not have to memorize the position of each parameter on the display.[5908]

1.2.4-2 Labeling Paired Bars

When bars are displayed in pairs, they should be labeled as a unit, with individual distinguishing labels for each bar.
Additional Information: Direct labeling of bars will make the information easier to use. If the user has to refer to a separately displayed legend, interpretation of the chart will be slower and more subject to error.[5908]

1.2.4-3 Bar Spacing

When data must be compared, bars should be adjacent to one another and spaced such that a direct visual comparison can be made without eye movement.
Additional Information: A horizontal bar chart is illustrated in Figure 1.3. The spacing between bars should be less than the bar width. If many bars are displayed, then spacing may produce an alternating pattern of bright and dark bands that could prove visually disturbing. In this case, it is preferable to arrange the bars contiguously (i.e., without spaces).[5908]

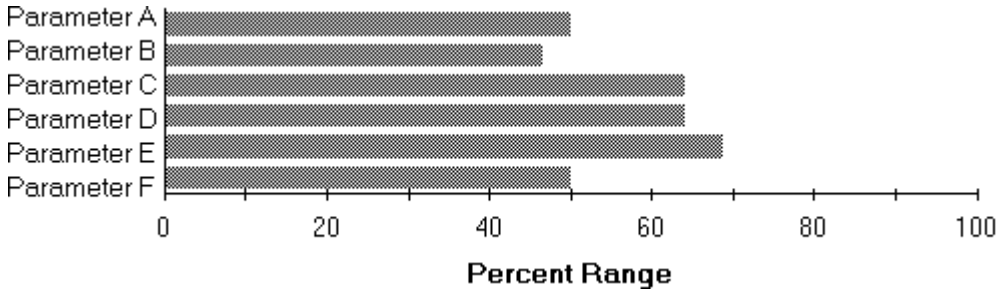

Figure 1.3 Example of a horizontal bar chart

1.2.4-4 Consistent Orientation of Bars

In a related series of bar charts, a consistent orientation of the bars (vertical or horizontal) should be adopted.
Additional Information: If bar length is used to represent time duration, then it might be more appropriate to orient the bars horizontally, in accord with the general convention of plotting time on the horizontal axis of a graph. Vertical bars can be used to display frequency counts or a large variety of other measured attributes.[5908]

1.2.4-5 Highlighting

If one bar represents data of particular significance, then that bar should be highlighted.

Additional Information: If one bar represents critical/discrepant data, then that bar might be coded differently. However, if bar coding is already used for other purposes, such as to distinguish among different sets of grouped bars, then no additional highlighting code should be superimposed on the bars themselves; some other means of highlighting (e.g., an arrow) might be adopted.[5908]

1.2.4-6 Zero Reference on Deviation Bar Charts
The zero reference should be the center of the deviation bar chart.
Additional Information: An example of a deviation bar chart appears in Figure 1.4.[0800]

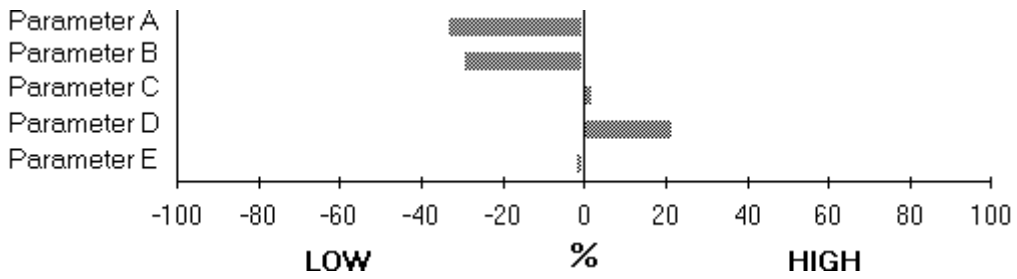

Figure 1.4 Example of a deviation bar chart

1.2.4-7 Normal Range on Deviation Bar Charts
On a deviation bar chart, the range of normal conditions for positive or negative deviations should represent no more than 10 percent of the total range.
Additional Information: An example of a deviation bar chart appears in Figure 1.4.[0800]

1.2.4-8 Indication of Magnitude on Deviation Bar Charts
The magnitude of each variable should be displayed when a deviation bar display is used as a main display format for safety function parameters.
Additional Information: The actual values of critical parameters should appear on the deviation bar display in addition to percent deviation.[0800]

1.2.4-9 Coding Segmented Bar Charts
Segmented bars, in which differently coded segments are shown cumulatively within a bar, should be used when both the total measures and the portions represented by the segments are of interest.
Additional Information: An example of a segmented bar chart appears in Figure 1.5.[5908]

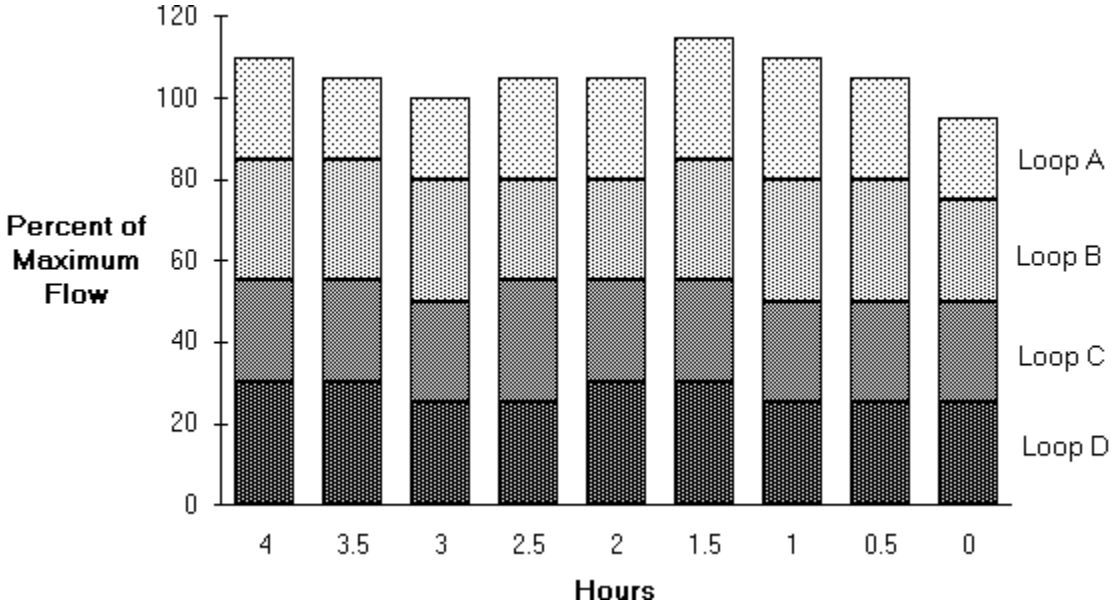

Figure 1.5 Example of a segmented bar chart

1.2.4-10 Ordering Data in Segmented Bars
The data categories should be ordered within each bar in the same sequence, with the least variable categories displayed at the bottom and the most variable at the top.
Additional Information: Sometimes there are independent logical grounds for the ordering of data categories. If a segmented bar graph that is constructed on a logical basis produces confusing irregularity of segments, then it might be better to display the data in some other graphic format. Any irregularity in the bottom segment will 'propagate' throughout the segments above it, which will make it difficult for a user to examine irregularities in the upper segments.[5908]

1.2.5-1 Interpreting Graphs

Graphs should convey enough information to allow the user to interpret the data without referring to additional sources.[5908]

1.2.5-2 Labeling Curves

When multiple curves are included in a single graph, each curve should be identified directly by an adjacent label, rather than by a separate legend.
Additional Information: As an exception, where displayed curves are too close for direct labeling, an acceptable alternative might be to distinguish the various curves in some way, perhaps by color coding or line coding, and identify their codes in a separate legend. Direct labeling will permit users to assimilate information more rapidly than displaying a separate legend.[5908]

1.2.5-3 Legend Ordering

If a legend must be displayed, the codes in the legend should be ordered to match the spatial order of their corresponding curves in the graph itself.[5908]

1.2.5-4 Coding to Distinguish Curves

Coding should be used when multiple functions are displayed in a single graph.
Additional Information: Coding should be provided particularly if curves approach and/or intersect one another. Coding is required to distinguish one curve from another.[5908]

1.2.5-5 Consistent Line Coding

Line coding should be used consistently across graphs.[5908]

1.2.5-6 Highlighting Significant Curves

In displays of multiple curves, if one curve represents data of particular significance, then that curve should be highlighted.
Additional Information: If one curve represents critical/discrepant data, for example, that curve might be displayed with a noticeably thicker line stroke or in a different color. If line coding is already used to distinguish among multiple curves, then the means of highlighting any particular curve should be selected so that it will not be confused with coding for visual separation. For example, if displayed curves are distinguished by line codes (solid, dashed, or dotted), then one curve might be highlighted by displaying it in a different color.[5908]

1.2.5-7 Trending Time Intervals

Trend displays should be capable of showing data collected during time intervals of different lengths.
Additional Information: A short time base of just a few minutes is needed to study fast changing trends, while other trends may not show significant changes for several hours.[5908]

1.2.5-8 Multiple Trend Lines

When the user must compare data represented by separate curves, the curves should be displayed in one combined graph.
Additional Information: Combined plots should be related, so the user can correlate changes in one variable with changes in other key variables. Only those curves requiring comparison should be combined, since, as the number of curves on a graph increases, the user's task of comparison will become more difficult.[5908]

1.2.5-9 Stability of Trend Data

Trend rates should not fluctuate as a result of minor fluctuations in data or oscillatory behavior that may be superimposed on a well-defined trend.[0800]

1.2.5-10 Indication of Non-Representative Trend Data

When a simple quantitative rate-of-change value is used, an indication should be provided to inform the user when, as a result of minor fluctuations or oscillations, the rate value does not accurately represent the trend.[0800]

1.2.5-11 Display of Projected Values

Curves representing planned, projected, or extrapolated data should be distinctive from curves representing actual data.
Additional Information: Curves representing projected data, for example, could be depicted as broken, dashed, or dotted lines, while curves representing actual data could be represented as solid lines.[5908]

1.2.5-12 Curve Averaging

Combining several individual curves into a single average curve should only be done when users do not need to know the pattern of individual curves or when curves differ on the basis of minor irregularities.
Additional Information: Curve averaging should be performed with caution since averages tend to 'wash out' local variations.[5908]

1.2.5-13 Repeating Display of Cyclic Data

Where curves represent cyclic data, the graph should be extended to repeat uncompleted portions of the displayed cycle.
Additional Information: This will allow users to scan any critical portion of the displayed cycle without having to return visually to the beginning of the plot. How much extension is desirable will depend on the particular application.[5908]

1.2.5-14 Target Area Definition

The target area, preferred combination of X- and Y-axis values, should be graphically defined.
Additional Information: Monitoring a pressure-temperature display, which presents a saturation curve that bisects the subcooled water region and the superheated steam region, is an example of a task situation where graphic depiction of a target area should be provided. This sort of display is best used for detecting deviations from normal if a target area can be defined. By plotting a brief time history, one may be able to predict where the values are headed. Care should be taken to distinguish the current value from past values, especially when the values change slowly. This can be done by placing a symbol or code for the current value.[5908]

1.2.5-15 Minimize Clutter

Old data points should be removed after some fixed period of time.
Additional Information: Ideally, as one new point is plotted, the oldest point should be removed, thereby maintaining a constant number of displayed points.[5908]

1.2.5-16 Linear Profile Pattern Recognition

The graph should form recognizable geometric patterns for specific abnormal conditions.
Additional Information: An example of a linear profile graph appears in Figure 1.6. The irregular profile is indicative of abnormal operating conditions.[5908]

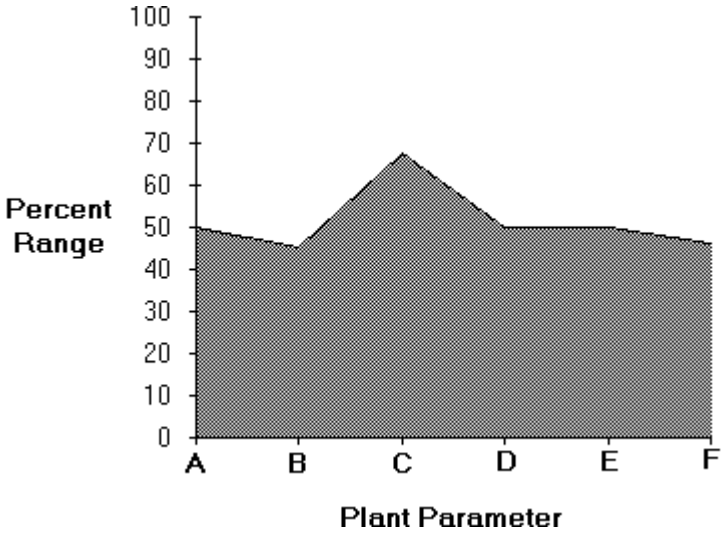

Figure 1.6 Example of a linear profile chart

1.2.5-17 Coding Linear Profile Charts
The area below the profile line should be shaded to provide a more distinguishable profile.[5908]

1.2.5-18 Labeling Linear Profile Charts
Labels should be provided along the bottom to identify each parameter.[5908]

1.2.5-19 Depicting Bands in Segmented Curve Graphs
All segments in a segmented curve graph should be related to the total value.
Additional Information: A segmented curve graph contains a series of bands depicting the components of a total series (see Figure 1.7). The values of the bands, segments, or strata are plotted on an X-Y plot. The bands are added to one another so that the topmost boundary represents the sum of all bands. For example, segmented curve graphs can be used to show how much each pump is contributing to total flow. This format is most useful when all elements contribute equally to the total under normal circumstances. Segmented curve graphs should not be used when changes in the movement of a series are abrupt, or where accurate reading of a component is of paramount importance.[5908]

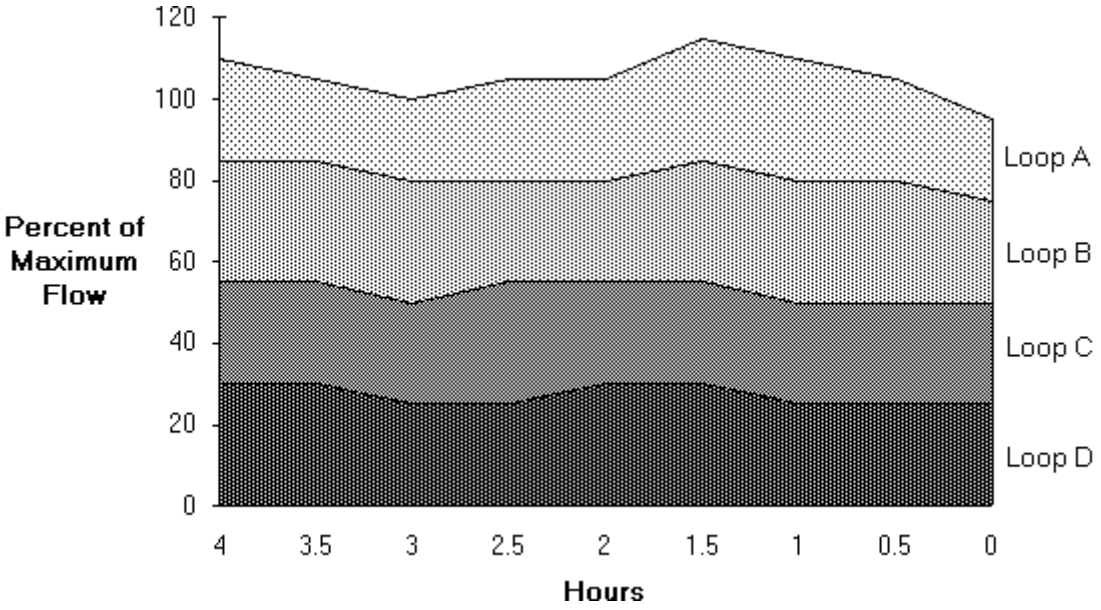

Figure 1.7 Example of a segmented curve graph

1.2.5-20 Ordering Data in Segmented Curve Graphs
The data categories in a segmented curve graph should be ordered so that the least variable curves are displayed at the bottom and the most variable at the top.
Additional Information: Sometimes there are independent logical grounds for the ordering of data categories. If a segmented curve graph that is constructed on a logical basis produces confusing irregularity of curves, then it might be better to display the data in some other graphic format. Any irregularity in the bottom curve will 'propagate' throughout the curves above it, which will make it difficult for a user to evaluate irregularities in the upper curves.[5908]

1.2.5-21 Coding Segmented Curve Graphs
The different bands of segmented curve graphs should be made visually distinctive by coding, such as by the texturing or shading of bands.[5908]

1.2.5-22 Labeling Segmented Curve Graphs
Where space permits, the different bands of segmented curve graphs should be labeled directly within the textured or shaded bands.[5908]

1.2.5-23 Highlighting Scatterplots
If some plotted points represent data of particular significance, they should be highlighted to make them visually distinctive from others.
Additional Information: Significant data points might be highlighted by bolding, color, blinking, shape coding, or other means, or might be designated by supplementary display annotation.[5908]

1.2.5-24 Grouping Scatterplots to Show Multiple Relations
When relations among several variables must be examined, an ordered group (matrix) of scatterplots should be displayed, each showing the relation between just two variables.

Additional Information: The ordering of several scatterplots in a single display might help a user discern relations among interacting variables.[5908]

1.2.5-25 Interactive Analysis of Grouped Scatterplots
When scatterplots are grouped in a single display to show relations among several variables, an interactive aid should be provided for analysis so that if a user selects a set of data in one plot then the corresponding data points in other plots will be highlighted.
Additional Information: Data selection might be accomplished with a superimposed box of controllable size to define the data set of interest. That technique can exploit the capabilities of interactive graphics to permit a range of data analysis not possible when using printed graphs.[5908]

1 INFORMATION DISPLAY
1.2 Display Formats
1.2.6 Pie Charts

1.2.6-1 Partitioning
Partitioning should be limited to five segments or less.[5908]

1.2.6-2 Labeling Pie Charts
Pie chart segments should be labeled directly rather than by a separate legend. If a segment is too small to contain the label, the label should be placed outside the segment with a line from it to the segment.
Additional Information: The label should be in a normal orientation for reading text.[5908]

1.2.6-3 Numeric Annotation of Labels
If the task requires precise values, numbers should be added to pie chart segment labels to indicate the percentage and/or absolute values.
Additional Information: Alternative display formats are preferred when users require precise data.[5908]

1.2.6-4 Highlighting
If a particular segment of a pie chart requires emphasis, it should be highlighted by special hatching or displaced slightly from the remainder of the pie.[5908]

1.2.7-1 Logical Ordering of Decision Options

The available decision options should be displayed in logical order.
Additional Information: For example, if options represent stages of a process, those stages should be listed in the order in which they would actually occur. The ordering of options should not be determined merely by the amount of space that is conveniently available to display them.[5908]

1.2.7-2 Single Decision at Each Step

Only a single decision should be required at each step.
Additional Information: Decisions should not be combined to reduce flowchart size.[5908]

1.2.7-3 Consistent Ordering of Decision Options

When a flowchart is designed so that a user must make decisions at various steps, the available options should be displayed in some consistent order from step to step.
Additional Information: For example, 'yes' might always be on the left and 'no' on the right. Another scheme is always to have the desirable path lead downward and the 'problem' paths lead out to the side. Consistent ordering will permit a user to review a flowchart more quickly.[5908]

1.2.7-4 Availability of Supplemental Information

While flowcharts should display only the data immediately required by the user, more detailed data should be available by means of a simple action.[5908]

1.2.7-5 Conventional Path Orientation

Flowcharts should be designed so that the path of the logical sequence is consistent with familiar orientation conventions.
Additional Information: For example, from left to right and from top to bottom.[5908]

1.2.7-6 Flowchart Symbol Set

There should be a standard set of flowchart symbols.[5908]

1.2.8-1 Level of Detail

Mimics and diagrams should contain the minimum amount of detail required to yield a meaningful pictorial representation.

Additional Information: An example of a mimic display is shown in Figure 1.8. Unnecessary graphic detail (such as shadowed symbols or very detailed icons) should be avoided.[5908]

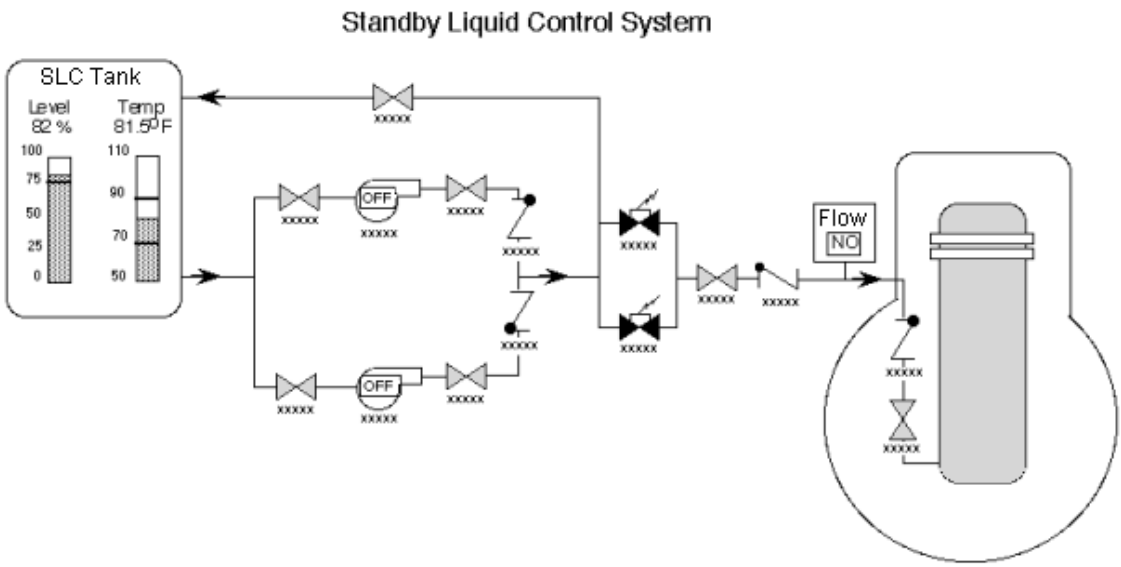

Figure 1.8 Example of a mimic display

1.2.8-2 Component Identification

Plant components represented on mimic lines should be identified.

Additional Information: Symbols used on mimic displays should conform to the guidelines in Section 1.3.4, Icons and Symbols.[0700, 5908]

1.2.8-3 Line Points of Origin

All flow path line origin points should be labeled or begin at labeled components.[5908, 0700]

1.2.8-4 Line Termination Points

All flow path line destination or terminal points should be labeled or end at labeled components.[5908, 0700]

1.2.8-5 Directional Arrowheads

Flow directions should be clearly indicated by distinctive arrowheads.[5908, 0700]

1.2.8-6 Line Coding

Flow paths should be coded (e.g., by color and/or width) to indicate important information.

Additional Information: For example, color can be used to differentiate process flow paths: blue may be used to code water lines; white, steam lines; and yellow, oil lines. In general, features of the flow path that change (e.g., the open/close status of valves) should be coded so as to be more salient than static features.[5908, 0700]

1.2.8-7 Overlapping Lines
Overlapping of flow path lines should be avoided.
Additional Information: Cross-overs should be clearly indicated so that they do not appear as connections.[5908, 0700]

1.2.8-8 Symbol-Data Integration
Where symbols are used to represent equipment components and process flow or signal paths, numerical data should be presented reflecting inputs and outputs associated with equipment.[5908]

1.2.8-9 Aids for Evaluation
When users must evaluate information in detail, computer aids for calculation and visual analysis should be provided.
Additional Information: For examining the internal structure of a depicted object, for example, it might be helpful to allow a user to request auxiliary displays of specified cross-sections or transect diagrams. For more detailed structural analysis of depicted objects, it might be necessary to provide computer aids for calculating area, volume, stresses, and heat transfer.[5908]

1.2.9-1 Feature Identification

Significant features of a map should be labeled directly on the display unless cluttering or obscuring of other information would result.

Additional Information: Labels on a map should be positioned consistently in relation to the displayed features they designate. For example, equipment names might always be placed immediately above the corresponding symbols showing their locations. As a practical matter, map displays can get very crowded. It may not always prove feasible to maintain a consistent placement for labels, with the result that designers will be tempted to put labels wherever they will fit. In such a crowded display, labels may obscure map features, and vice versa. Locating and reading labels will be slowed, particularly when map features are displayed closely adjacent to the beginning of labels. Under these circumstances, some other approach to map labeling should be considered to avoid crowding.[5908]

1.2.9-2 Consistent Orientation

When several different maps will be displayed, a consistent orientation should be used so that the top of each map will always represent the same direction.

Additional Information: In common use, most maps are oriented so that North is upward.[5908]

1.2.9-3 User Selectable Orientation

The user should be able to select different orientations and reference points.

Additional Information: The system should provide the user with a listing of the common orientations and reference points. If the map display can be displayed at other workstations, only the display at the user's workstation should be affected by the selection. The selected orientation should be clearly indicated, e.g., with a label.[5908]

1.2.9-4 Panning Map Displays

When a map exceeds the capacity of a single display frame, users should be able to pan the display over the mapped data in order to examine different areas of current interest.

Additional Information: Panning is preferred to breaking map displays into discrete pages. Some graphic indicator of the position in the overall display of the visible section should be provided when a user pans over an extended display in order to view different sections.[5908]

1.2.9-5 Area Coding

Codes, such as texture patterns, color, or tonal variations, should be used when different areas of a map must be defined, or when geographic distribution of a particular variable must be indicated.

Additional Information: It may be desirable to limit area coding to one variable in order to assure effective information assimilation. Another approach might be to allow a user to specify which variable will be coded on a map and to change that selection at will depending upon current task requirements. In some special applications, however, it may be feasible to superimpose several kinds of area coding to permit multivariate data analysis by skilled users.[5908]

1.2.9-6 Color Tonal Codes

Tonal codes (different shades of one color) rather than spectral codes (different colors) should be used when users must make relative judgments for different colored areas of a display.

Additional Information: People can order categories along a continuous dimension to match tonal variations in one color, whereas people do not have a natural means of ordering different colors. This recommendation represents an exception to other guidelines advocating distinctive code values. Coding by tonal variation should be considered only for applications where perception of relative differences along a single dimension is more important than perception of absolute values.[5908]

1.2.9-7 Ordered Coding
Where different areas of a map are coded by texture patterns or tonal variation, the darkest or lightest shades correspond to the extreme values of the coded variable.
Additional Information: Orderly assignment of code values will help users perceive and remember the categories represented by the code.[5908]

1.2.9-8 Mapping Nongeographic Data
In applications where the geographic distribution of nongeographic data must be displayed, other graphic elements should be added to a map for that purpose.
Additional Information: A display for radioactive control, for example, might superimpose plume tracks on a background of geographic coordinates, with supplementary annotation and/or coding to indicate track identification, speed, heading, altitude, etc. Alphanumeric characters might be added to a map to show data, but those will not aid a direct visual comparison across areas in the same way that graphic symbols can do. Moreover, alphanumeric data may be confused with labels and other kinds of annotation. For example, a symbol might be displayed in different sizes to indicate a particular measure in different localities, or small stacked bars might be superimposed on the different areas of a map to indicate the local distribution of some data measure.[5908]

1.2.9-9 Highlighting Data Change
When changes in mapped data are significant for a user's task, auxiliary graphic elements should be included to highlight those changes.
Additional Information: For example, auxiliary coding might be needed to indicate vehicular movement on a map showing evacuation routes.[5908]

1.2.9-10 Aids for Analyzing Maps
When the use of mapped data may be complex, computer aids should be provided for data analysis.
Additional Information: Computer aids should be provided when a user must judge distances accurately on a map or other graphic display. For exact measurement, it might be better to allow a user to select (point at) any two points and have the computer read out their separation distance directly. The same technique might be used to determine the direction (bearing) between two points.[5908]

1.2.9-11 Map and Label Orientation
If the map orientation can be changed, the map labels and symbols should remain oriented to the user's position.[6546]

1.2.9-12 Map Decluttering
The user should be able to rapidly remove non-critical information from a map or map overlay display.[6546]

1.2.10-1 Appropriate Use of Integral Displays

Integral formats should be used to communicate high-level, status-at-a-glance information where users may not need information on individual parameters to interpret the display.
Additional Information: Since integral displays do not display individual parameters, they are most appropriate for general status monitoring.[6633]

1.2.10-2 Appropriate Use of Configural Displays

Configural formats should be used when operators must rapidly transition between high-level functional information and specific parameter values.
Additional Information: Configural displays provide lower-level information, such as parameter values, and higher-level information conveyed through emergent features. Since both are present in a single display, operators can easily move between them.[6633]

1.2.10-3 Reference Aids for Object Displays

A perceptually distinct reference aid should be provided in an object display to support operators in recognizing abnormalities in the object's characteristics.
Additional Information: When a change in an object's characteristics (e.g., its shape) is the perceptual feature that indicates a fault or abnormal condition, perceptual cues can assist operators in detecting the change. If shape is used, the graphic display should include the normal reference point to which operators can compare the current shape. Reference points are especially useful when the abnormality is slow to evolve, and the integral object is changing slowly.[6633]

1.2.10-4 Representation of Emergent Features

The display elements should be organized so that the emergent features that arise from their interaction correspond to meaningful information about the process or system, e.g., when the aspect of the system represented by the emergent is disturbed, the disturbance is visible in the emergent feature.
Additional Information: An emergent feature is a high-level, global perceptual feature generated by interactions among individual parts or graphical elements of a display (e.g., lines, contours, and shapes) to produce perceptual properties, such as symmetries, closure, and parallelism. Displays cannot always be organized to provide emergent features, but they should be considered where feasible.[6633]

1.2.10-5 Levels of Emerging Features

The emergent features or patterns within the display should be nested (from global to local) in a way that reflects the hierarchical structure of the process.
Additional Information: High-order aspects of the process (e.g., at the level of functional purpose or abstract function) should be reflected in global display features; lower-order aspects of the process (e.g., functional organization) should be reflected in local display features.[6633]

1.2.10-6 Salience of Emerging Features

Each emergent feature should be clearly distinguishable for other emergent features and from information on individual parameters.
Additional Information: For example, users' perception of plant status can be enhanced by shading the area within a feature. [5908, 6633]

1.2.10-7 Reference Aids for Configural Displays

A perceptually distinct reference aid should be provided in a configural display to support operators in recognizing abnormalities in emergent features.

Additional Information: When a change in an object's characteristics (e.g., its shape) is the perceptual feature that indicates a fault or abnormal condition, perceptual cues can assist operators in detecting the change. If shape is used, the display graphic should include the normal reference point against which operators can compare the current one. Reference points are especially useful when the abnormality is slow to evolve, and the integral object is slowly changing. Recognition of abnormalities can also be aiding by having normal conditions represented by regular, symmetrical shapes and abnormal conditions indicated by asymmetrical shapes. [5908, 6633]

1.2.10-8 Representation of Individual Parameters
Each relevant process parameter should be represented by a perceptually distinct element within the display.[6633]

1.2.10-9 Use of Lower-Level Information
The display should support the user in performing tasks requiring lower-level information.
Additional Information: When the operator must perform tasks using lower level information, the display should provide such support. For example, if precise information about a variable is desirable, then a scale or digital information should be provided. Scales should be labeled with the names of the displayed parameters.[5908, 6633]

1.2.10-10 Complexity
The emergent features and their interactions should not be so complex as to be susceptible to misinterpretation.
Additional Information: The value of emergent features is that they provide a direct perception of higher-level information. They substitute perception for mental calculation. The shift toward perceptual cognition requires careful design, so that misunderstandings are unlikely to occur.[6633]

1.2.11-1 Display Range Coding

Zones indicating operating ranges should be color coded by edge lines or wedges for circular scales.
Additional Information: Zones can be used to indicate operating ranges, off-normal levels, and dangerous levels.[5908]

1.2.11-2 Location of Zero

When check-reading positive and negative values on rotary meters (circular displays), the zero or null position should be at 12 o'clock or 9 o'clock.
Additional Information: With a matrix of circular displays, deviations from a 9 o'clock null position are easily detected in check reading. Zero should appear at the 12 o'clock position on multi-revolution dials.[5908]

1.2.11-3 Pointer Orientation

The pointer on fixed scales should extend from the right of vertical scales and from the bottom of horizontal scales.[5908]

1.2.11-4 Pointer Obscurement

The pointer on fixed scales should extend to but not obscure the shortest graduation marks.[5908]

1.2.11-5 Tick Mark Separation

Tick marks should be separated by at least 0.07 inches (1.75 millimeters) for a viewing distance of 28 inches (71 centimeters) under low illumination.
Additional Information: Low illumination is less than 1.0 ft-L (3.5 cd/m^2).[5908]

1.2.11-6 Number of Tick Marks

Scales should not be cluttered with more marks than necessary for precision.[5908]

1.2.12-1 Limits on Speech Messages

Speech should be limited to provide only a few messages.
Additional Information: Speech messages would not be useful, for example, if many messages might be given at one time, or for conveying a lengthy list of menu options.[5908]

1.2.12-2 Message Repeat Capability

The user should be able to have speech messages repeated.[5908]

1.2.12-3 Simple Spoken Messages

Messages should be short and simple.
Additional Information: If a user does not understand a written message, it can be reread. That is not as easy with spoken messages, even though a REPEAT function should be provided. A better approach is to restrict use of speech outputs to short and simple messages. If a user who may not be watching a display must be given long or complex messages, it is probably better to provide a simple auditory signal such as a chime, and then display the messages visually for the user to read. In general, users will understand complex messages better when they see them displayed than when they hear them.[5908]

1.2.12-4 Type of Voice

A distinctive and mature voice should be used.[5908]

1.2.12-5 Delivery Style

Spoken messages should be presented in a formal, impersonal manner.[5908]

1.2.12-6 Word Selection

Words in a speech message should be concise, intelligible, and appropriate for the information presented.
Additional Information: Where possible, words that rhyme or may confuse message interpretation should not be part of the spoken lexicon, or should not be presented within the same message. Use of slang should be avoided. Words with more than one syllable should be used. Alphanumeric data should be presented using phonetic alphabets, e.g., 'Whiskey Zebra three two seven' should be used in preference to 'WZ327' where the 'Z' and '3' are too phonetically similar.[5908]

1.2.12-7 Speech Message Priority

A speech message priority system should be established such that more critical messages override the presentation of messages having lower priority.
Additional Information: If two or more incidents or malfunctions occur simultaneously, the message having the higher priority should be given first. The remaining messages should follow in order of priority. In the event of a complete subsystem failure, the system should integrate previous messages via electronic gating and report the system rather than the component failure.[5908]

1.2.12-8 Distinctive Spoken Warnings

If speech is used to provide warnings as well as other forms of user guidance, spoken warnings should be easily distinguishable from routine messages.
Additional Information: For example, speech output used to identify emergency conditions might use some distinctive voice and/or preface each warning message with some other distinctive auditory alert signal. In some applications, computer- generated speech might be useful for providing a few short and simple warnings. However, if speech output is also used for other purposes, then the warning messages must be distinctive.[5908]

1.2.12-9 Intensity of Speech Presentation

Speech signal intensity should be clearly audible for the expected ambient noise environment. *Additional Information:* For critical messages, speech should be at least 20 dB above the speech interference level at the operating position of the intended receiver. Signal to noise ratios should be at least 5:1. Audio signal power should be approximately 300 milliwatts at the listener ear. Speech signals should fall within the range of 200 to 6100 Hz.[5908]

1 INFORMATION DISPLAY
1.3 Display Elements
1.3.1 Alphanumeric Characters

1.3.1-1 Conventional Use of Mixed Case
Text to be read (except labels) should be presented using upper and lower case characters.
Additional Information: Reading text is easier and faster when capitalization is used conventionally to start sentences and to indicate proper nouns and acronyms. There are several exceptions, however. An item intended to attract the user's attention, such as a label or title, can be displayed in upper case. In addition, upper case should be used when lower case letters will have decreased legibility, e.g., on a display terminal that cannot show true descenders for lower case letters.[5908]

1.3.1-2 Font Style
A clearly legible font should be utilized. Fonts should have true ascenders and descenders, uniform stroke width, and uniform aspect ratio.
Additional Information: Preference should be given to simple styles. Script and other highly stylized fonts (e.g., shadow, calligraphy) should be avoided. Avoid typefaces that: have extended serifs, internal patterns, or stripes; are italicized, stenciled, shadowed or 3-dimensional; appear like handwritten script or like Old English script; or are distorted to look tall and thin or wide and fat. The basic evaluation criterion for font selection should be legibility.[5908, 0700]

1.3.1-3 Distinguishability of Characters
For a given font, it should be possible to clearly distinguish between the following characters: X and K, T and Y, I and L, I and 1, O and Q, O and 0, S and 5, and U and V.[5908]

1.3.1-4 Character Size for Text Readability
The height of characters in displayed text or labels should be at least 16 minutes of arc and the maximum character height should be 24 minutes of arc.
Additional Information: Character heights of 20 to 22 minutes of arc are preferred for reading tasks. Slightly smaller characters are acceptable in high-contrast panel labels (see Section 11.3.1.5, Label Lettering). Characters should not be larger than 45 minutes of arc when groups of characters are displayed. Minutes of arc can be converted into height as follows:

$$\text{Height} = 6.283D(MA)/21600$$

where MA is minutes of arc, and D is the distance from the user to the screen.[5908]

1.3.1-5 Character Height-to-Width Ratio
For fixed (as opposed to proportionally spaced) presentations, the height-to-width ratio should be between 1:0.7 to 1:0.9.
Additional Information: For proportionally spaced presentations, a height-to-width ratio closer to 1:1 should be permitted for some characters, for example, the capital letters M and W. The height-to-width ratio of a given character is the vertical distance between the top and bottom edges, and the left and right edges of a nonaccented capital letter. Some letters, however, are customarily seen as narrower than are others. For example, in a given character set, the letter I, and sometimes the letter J, appear narrower than M and 2. Lowercase letters may similarly vary in width. Accordingly, the height-to-width ratio of a given character set should be the modal character width – that is, the width that occurs most often – in the set of capital letters. These measurements are to be made at the same luminance level as the resolution measurement (see Guideline 1.6.1-1).[5908]

1.3.1-6 VDU Character Format
A 4x5 (width-to-height) character matrix should be the minimum matrix used for superscripts and for numerators and denominators of fractions that are to be displayed in a single character position.

Additional Information: A 5x7 (width-to-height) character matrix should be the minimum matrix used for numeric and uppercase-only presentations. The vertical height should be increased upward by two dot positions if diacritical marks are used. A 7x9 (width-to-height) character matrix should be the minimum matrix for tasks that require continuous reading for context, or when individual alphabetic character legibility is important, such as in proofreading. The vertical height should be increased upward by two dot (pixel) positions if diacritical marks are used. If lower case is used, the vertical height should be increased downward by at least one dot (pixel) position, preferably two or more, to accommodate descenders of lower case letters. Stroke width should be greater than 1/12 of the character height. A stroke width may be more than one pixel wide.[5908]

1.3.1-7 Inter-Character Spacing

Horizontal separation between characters or symbols should be between 10 and 65 percent of character or symbol height.

Additional Information: Separation should not be less than 25 percent of character height when any of the following degraded conditions exists: (1) when character width is less than 85 percent of height; (2) when character luminance in less than 12 ft-L; (3) when luminance contrast is less than 88 percent; (4) when display is more than 35 degrees left or right of the straight-ahead line of sight; and (5) when the visual angle subtended by the character or symbol height is less than 15 minutes of arc.[5908, 0700]

1.3.2-1 Avoiding Abbreviations

Abbreviations should be avoided (except when terms are commonly referred to by their initialisms, e.g., SPDS).

Additional Information: When abbreviation is necessary due to space constraints, the words chosen for abbreviation should be those that are commonly known in their abbreviated form, and/or those words whose abbreviations can be unambiguously interpreted. To indicate that there is low pressure in the condensate storage tank, the use of 'CST Pressure Low' would be acceptable, but 'Condensate Storage Tank Prssr Lw' is not a good abbreviation. If the user enters an abbreviation for a command name, the system should use the same abbreviation when referring to that command in messages or prompts. The use of abbreviations or contractions in output text should be avoided.[5908, 0700]

1.3.2-2 Abbreviation Rule

When defining abbreviations that are not common to the user population, a simple rule should be used that users understand and recognize.

Additional Information: Abbreviation by truncation is the best method, except when word endings convey important information. When a truncation rule is used, abbreviations are easy to derive and easy for a user to decode. If an abbreviation deviates from the consistent rule, it may be helpful to give it some special mark whenever it is displayed.[5908]

1.3.2-3 Distinctive Abbreviations

Abbreviations should be distinctive so that abbreviations for different words are distinguishable.[5908]

1.3.2-4 Punctuation of Abbreviations

Abbreviations and acronyms should not include punctuation.

Additional Information: For example, SPDS is preferred over S.P.D.S. Punctuation should be retained when needed for clarity, e.g., '4-inch diameter pipe' rather than '4 in diameter pipe.'[5908]

1.3.2-5 Easily Remembered Arbitrary Codes

When arbitrary codes must be remembered by the user, characters should be grouped in blocks of three to five characters, separated by a minimum of one blank space or other separating character such as a hyphen or slash.

Additional Information: Arbitrary codes are alphanumeric characters without natural organization. When a code is meaningful, such as a mnemonic abbreviation or a word, it can be longer.[5908]

1.3.2-6 Avoid O and I in Arbitrary Codes

The use of the letters O and I in a non-meaningful code should be avoided since they are easily confused with the numbers 0 (zero) and 1 (one), respectively.[5908]

1.3.2-7 Combining Letters and Numbers in Arbitrary Codes

When codes combine both letters and numbers, letters should be grouped together and numbers grouped together rather than interspersing letters with numbers.

Additional Information: For example, letter-letter-number ('HW5') will be read and remembered somewhat more accurately than letter-number-letter ('H5W').[5908]

1 INFORMATION DISPLAY
1.3 Display Elements
1.3.3 Labels

1.3.3-1 Group Labels
Each individual aspect of a display (e.g., data group, field, or message) should contain a distinct, unique, and descriptive label.[5908, 0700]

1.3.3-2 Meaningfulness of Labels
Labels should be meaningful words or accepted technical terms.
Additional Information: Labels should describe the contents of the display accurately and concisely, without unnecessary words or characters. Whenever space permits, the label should consist of the entire word or sequence of words that describes the displays. If abbreviations are necessary, their meanings should be readily understood by users.[5908]

1.3.3-3 Label Formats
Label formats should be consistent across and within displays.[5908]

1.3.3-4 Consistent Wording of Labels
Labels should be worded consistently, so that the same item is given the same label whenever it appears.
Additional Information: Consistent grammatical format for different labels should also be employed; i.e., single words or phrases for some labels and short sentences for others, or verbs for some and nouns for others should not be used.[5908]

1.3.3-5 Distinctive Labels
Labels should be uniquely and consistently highlighted, capitalized, or otherwise emphasized to differentiate them from other screen structures and data.
Additional Information: The technique used should be easily distinguished from that used to highlight or code emergency or critical messages, such as by bolding, underlining, and use of capitals.[5908, 0700]

1.3.3-6 Label Separation
Labels should be separated from one another by at least two standard character spaces.[5908]

1.3.3-7 Normal Orientation for Labels
The annotation of graphic displays, including labels for the axes of graphs, should be displayed in a normal orientation for reading text.
Additional Information: Users should be presented with horizontally displayed labels, even for the vertical axis of a graph. A conventional text orientation of labels will permit faster, more accurate reading. While it may be possible to tilt the page to read a disoriented label on a printed page, a user usually cannot tilt a VDU display screen.[5908, 0700]

1.3.3-8 Label Content for User Options
When presenting a list of user options, labels should reflect the question or decision being posed to the user.[5908, 0700]

1.3.3-9 Labels for Graphical Objects
The label for a specific graphical object (e.g., an icon) should be placed in close proximity to the object.
Additional Information: When possible, the label should be on the component if it does not obscure the component. If multiple component parts of the graphic object are close to the label, a line should point from the label to the associated part.[5908]

1.3.4-1 Appropriate Use of Icons

The primary use of icons in graphic displays should be to represent actual objects or actions.
Additional Information: Icons may be used to graphically represent operations, processes, and data structures, and may be used as means of exercising control (e.g., by selecting an icon and commanding operations) over system functions, components, and data structures.[5908]

1.3.4-2 Iconic Representation

Icons should be designed to look like the objects, processes, or operations they represent, by use of literal, functional, or operational representations.
Additional Information: Some pictorial symbols have conventional meanings within a user population, which must be followed to ensure their correct interpretation. Examples of representations: literal, a figure of a pump; functional, a figure of a file cabinet; and operational, a hand on a switch.[5908]

1.3.4-3 Simple Design

Icons should be simple, closed figures when possible.
Additional Information: When icons are too visually complex, they are not quickly recognized. This eliminates the primary advantage of using icons, i.e., quick recognition. Simple, closed figures (i.e., ones with a continuous outside border) are processed more efficiently than are open figures.[5908]

1.3.4-4 Use of Abstract Symbology

Abstract symbols should conform to user conventions or to common electrical and mechanical symbol conventions when user conventions do not exist.
Additional Information: Symbols used on displays should not be inconsistent with those of other information sources used in the work area, such as P&IDs and logic diagrams.[5908]

1.3.4-5 Distinguishability

Each icon and symbol should represent a single object or action, and should be easily discriminable from all other icons and symbols.
Additional Information: The distinguishing feature between icons should be the external geometric configuration of the icon.[5908]

1.3.4-6 Consistent Use of Special Symbols

Special symbols to signal critical conditions should be used exclusively for that purpose.[5908]

1.3.4-7 Upright Orientation

Icons and symbols should always be oriented 'upright.'[5908]

1.3.4-8 No Alternating Words and Symbols

Words and symbols should not be used alternately.
Additional Information: Alternate use of symbols and words could cause confusion and impair task performance.[5908]

1.3.4-9 Size

Icons and symbols should be large enough for the user to perceive the representation and discriminate it from other icons and symbols.

Additional Information: When a displayed symbol of complex shape is to be distinguished from another symbol shape that is also complex, the symbol should subtend not less than 20 minutes of arc at the required viewing distance. VDU-displayed symbols that must be distinguished from other complex shapes should have a minimum of 10 resolution elements for the longest dimension of the symbol.[5908, 0700]

1.3.4-10 Highlighting
An icon or symbol should be highlighted when the user has selected it.[5908]

1.3.4-11 Labeling Icons
Icons should be accompanied by a text label.
Additional Information: To the extent that it does not clutter or cause distortion of the icon, the label should be incorporated into the icon itself. When icons are designed such that the label is inside the icon, the number of perceptual objects is reduced, resulting in enhanced processing of the label and the icon. The text label may be omitted for icons having unambiguous meanings to users, e.g., standard P&ID symbology.[5908]

1.3.4-12 Labels for Control Option Icons
If icons are used to represent control action options, a label indicating the action should be associated with the icon.[5908]

1.3.5-1 Number System
Numeric values should ordinarily be displayed in the decimal number system.
Additional Information: Maintenance, troubleshooting, or configuration tasks may use other systems (e.g., binary, octal, or hexadecimal).[5908]

1.3.5-2 Leading Zeros
Leading zeros in numeric entries for whole numbers should be suppressed.
Additional Information: For example, 28 should be displayed rather than 0028. A leading zero should be provided if the number is a decimal with no preceding integer (i.e., 0.43 rather than .43).[5908]

1.3.5-3 Maintaining Significant Digits
A number should be displayed at the number of significant digits required by users to perform their tasks.
Additional Information: Arbitrary conventions should not require that displays present more (or fewer) significant digits than necessary. The number of significant digits must be supported by the accuracy of the underlying sensors, instruments, and electronics.[5908]

1.3.5-4 Display Range
Numeric displays should accommodate the variable's full range.
Additional Information: The full range of the variable means highest and lowest values that the variable is expected to take on, under any conditions (normal or emergency operations) for the tasks the display is designed to support.[5908]

1.3.5-5 Rate of Display Change
Digital displays should change slowly enough to be readable.[5908]

1.3.5-6 Direction of Change in Digital Display
If users must rapidly discern directional change, digital displays should be provided with arrows to indicate the direction of change.
Additional Information: Rapidly changing digital values are difficult to read, and directional indicators will help the user interpret the direction of trend.[5908]

1.3.5-7 Direct Display of Differences
If users must evaluate the difference between two sets of data, the difference should be presented on the display.
Additional Information: If it is important for the user to be aware of a discrepancy between two sets of data, the difference should be highlighted on the display.[5908]

1.3.5-8 Orientation of Numbers
All numbers should be oriented upright.[5908]

1.3.6-1 Orientation of Scales

Numbers on a scale should increase clockwise, left to right, or bottom to top.[5908]

1.3.6-2 Scale Intervals

Nine should be the maximum number of tick marks between numbers.
Additional Information: Major and minor graduations should be used if there are up to four graduations between numerals. Major, intermediate, and minor graduations should be used if there are five or more graduations between numerals. The use of these graduations on a conventional meter face is shown in Figure 1.9. Table 1.2 shows graduation dimensions as a function of viewing distance for a conventional meter face.[5908, 0700]

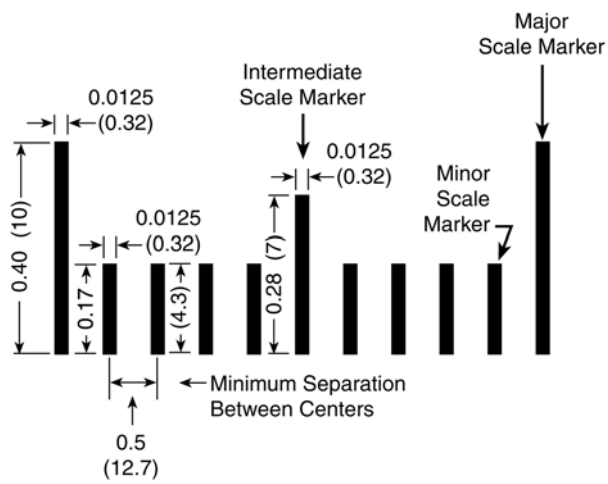

Figure 1.9 Graduation dimensions for 3-foot viewing distance

1.3.6-3 Scaling in Standard Intervals

Scales should have tick marks at a standard interval of 1, 2, 5, or 10 (or multiples of 10) for labeled divisions; intervening tick marks to aid visual interpolation should be consistent with the labeled scale interval.
Additional Information: Users will find it difficult to interpret scales based on odd intervals. It is not advisable to let the computer divide available scale space automatically if that results in a scale labeled in unfamiliar intervals such as 6 or 13. In special instances, the X-axis might be scaled in odd intervals to show customary divisions, such as the 12 months in a year.[5908, 0700]

1.3.6-4 Circular Scales

For one-revolution circular scales, zero should be at 7 o'clock and the maximum value should be at 5 o'clock.[5908]

1.3.6-5 Axis Labels

Axes should be clearly labeled with a description of what parameter is represented by the axis.
Additional Information: Labels should be displayed in upright orientation on both the X- and Y-axis for ease of reading.[5908]

Table 1.2 Index heights for various viewing distances

VIEWING DISTANCE feet (m)	INDEX HEIGHT inches (mm)		
	MAJOR	INTERMEDIATE	MINOR
1.5 (0.5)	0.22 (5.5)	0.16 (4)	0.09 (2)
3 (0.9)	0.40 (10)	0.28 (7)	0.17 (4)
6 (1.8)	0.78 (20)	0.56 (14)	0.34 (8.5)
12 (3.7)	1.57 (40)	1.12 (28.5)	0.65 (16.5)
20 (6.1)	2.63 (67)	1.87 (47.5)	1.13 (28.5)

1.3.6-6 Identification of Units of Measurement
The units of measurement represented by the scale should be included in the axis label.[5908]

1.3.6-7 Scaling Conventions
Conventional scaling practice should be followed, in which the horizontal X-axis is used to plot time or the postulated cause of an event, and the vertical Y-axis is used to plot the effect.
Additional Information: When the X-axis represents time intervals, the labeled scale points should represent the end of each time interval. This consistent usage will aid interpretation of all data plots, including scatterplots, line graphs, and bar charts.[5908]

1.3.6-8 Consistent Scaling
If users must compare graphic data across a series of displays, the same scale should be used for each.
Additional Information: Note that in many applications it may prove more effective to display data for comparison in a single combined chart, rather than requiring users to compare data across a series of charts. Users will find it difficult to compare data sets that are scaled differently. Moreover, users may overlook differences in labeling, and assume that the same scale has been used even when displayed scales are actually different from one another.[5908, 0700]

1.3.6-9 Scales Consistent with Function
The scales should be consistent with the intended functional use of the data.

Additional Information: Scales should be selected to (1) span the expected range of operational parameters, (2) employ appropriate scale ranging techniques, or (3) be supported by auxiliary wide-range instruments. For example, the monitoring of neutron flux at reactor trip must have a variable scale of 0 to 100 percent of the design value and a time scale resolution of seconds. However, post-trip monitoring may have a variable scale of 0 to 10 percent with a time scale resolution of minutes. Finally, operational log data of neutron flux may have a time scale resolution of hours.[5908, 0700]

1.3.6-10 Linear Scaling
A linear scale should be used for displayed data, in preference to logarithmic or other non-linear methods of scaling, unless it can be demonstrated that non-linear scaling will facilitate user interpretation of the information.
Additional Information: Most users are more familiar with linear scales and will interpret linear scales more accurately than other methods of scaling. However, since logarithmic scales show percentage change rather than arithmetic change; they may be appropriate for some special applications.[0800, 5908, 0700]

1.3.6-11 Numeric Scales Start at Zero
When users must compare aggregate quantities within a display, or within a series of displays, scaling of numeric data should begin with zero.
Additional Information: Numerical scales generally should have zero at the bottom as the first number on a vertical scale or at the left as the first number on a horizontal scale. The exceptions to this organization would be: (1) if the numbers are used for naming categories, (2) if zero is not a plausible number on the scale, or (3) if the scale contains negative numbers. If for any reason the zero point is omitted, the display should include a clear indication of that omission, and the scales on which quantities are to be compared should be the same.[5908]

1.3.6-12 Display of Origin
When graphed data represent positive numbers, the graph should be displayed with the origin at the lower left, such that values on an axis increase as they move away from the origin of the graph.
Additional Information: When the data include negative values and the axes must extend in both directions from a zero point, that origin should be displayed in the center of the graph.[5908]

1.3.6-13 Single Scale On Each Axis
Only a single scale should be shown on each axis, rather than including different scales for different curves in the graph.
Additional Information: Single-scale graphs will generally permit more accurate reading than graphs displaying several scales. Many users will be confused by multiple-scale graphs and make errors when interpreting them. Moreover, by changing the relative scale factors of multiple-scale graphs, it is possible to change radically their apparent meaning and bias interpretation by users.[5908]

1.3.6-14 Scaling Against a Reference Index
If different variables on a single graph require different scales, they should be scaled against a common baseline index, rather than showing multiple scales.
Additional Information: Rather than showing power in megawatts and profits in dollars, both might be graphed in terms of percent change from a baseline. An indexed chart can permit comparisons among different variables when multiple scales would otherwise be needed. However, care should be taken in selecting an appropriate baseline against which to index, in order to ensure that comparisons will not be biased. Index scaling may also be appropriate for showing the effect of a single variable whose units of measurement change in real value with time.[5908, 0700]

1.3.6-15 Indication of Scale

When a graphic display has been expanded from its normal coverage, some scale indicator of the expansion factor should be provided.
Additional Information: Scale ranges may be expanded (or contracted) by multiplying or dividing indicated scale values by powers of ten. All such scales should be clearly marked as to whether the indicated values should be multiplied or divided, and the factor to be used (e.g., 10, 100, or 1000).[5908]

1.3.6-16 Manual Rescaling

Users should be able to manually change the scale to maintain an undistorted display under different operating conditions.[0800]

1.3.6-17 Indication of Automatic Rescaling

If the system is designed to automatically change scale, an alert should be given to the user that the change is being made.
Additional Information: Automatic rescaling can lead to confusion if the change in scale is not recognized.[0800]

1.3.6-18 Aids for Scale Interpolation

If interpolation must be made or where accuracy of reading graphic data is required, computer aids should be provided for exact interpolation.
Additional Information: It might suffice, for example, to allow users to request a fine grid as an optional display feature. It might be better to display vertical and horizontal rules that a user could move to intersect the axes of a chart. It might prove best simply to let a user point at any data item and have the computer label that item with a readout of its exact value(s).[5908]

1.3.6-19 Unobtrusive Grids

When grid lines are displayed, they should be unobtrusive and not obscure data elements (e.g., curves and plotted points).
Additional Information: Grid lines should be thinner than data curves, and should be invisible behind depicted objects and areas. Heavy grid lines may conceal details of plotted data. Electronic displays offer more flexibility than printed graphs. Grids can be displayed or suppressed by user selection. For reading the value of a particular data point, perhaps no grid is needed at all. A user might simply ask the computer to display the value of any selected point.[5908]

1.3.6-20 Numbering Grids

Graphs should be constructed so that the numbered grids are bolder than unnumbered grids.
Additional Information: If 10-grid intervals are used, the fifth intermediate grid should be less bold than the numbered grid, but bolder than the unnumbered grids.[5908, 0700]

1.3.6-21 Discontinuous Axes

When data comparisons of interest fall within a limited range, the scaled axis should emphasize that range, with a break in the displayed axis to indicate discontinuity with the scale origin.
Additional Information: Note, however, that a broken axis distorts the displayed value in relation to a base value and so risks confusing users. In effect, a user will expect that a scale marked in regular intervals will continue in a consistent fashion. If an axis must be broken, the break should be labeled clearly, perhaps with some indicator that extends across the displayed graph.[5908]

1.3.6-22 Duplicate Axes

When scaled data will contain extreme values, duplicate axes should be displayed, so that the X-axis appears at both the top and bottom, and the Y-axis at both the left and right sides of the graph.
Additional Information: Extreme data values may be located far from conventionally placed axes. When duplicate axes are displayed at the top and right side, users will find it easier to read the extreme values.[5908]

1.3.6-23 Restricted Use of Three-Dimensional Scaling

Unless required, use of three-dimensional scales (i.e., where a Z-axis is added to the display) should be avoided.
Additional Information: Showing a Z-axis on a VDU display that is limited to two actual dimensions will confuse many users. If three-dimensional scaling is employed, a consistent method of representation (e.g., isometric or orthographic projection, perspective drawing, or triangular coordinate grid) should be used. It is often possible in graphic display to show a third dimension through use of auxiliary coding (e.g., color or shape coding, or supplementary annotation), which may prove more effective than trying to represent a third spatial dimension pictorially.[5908]

1.3.7-1 Line Types

Meaningful differences between lines appearing in graphic displays, such as flow paths, should be depicted by using various line types, e.g., solid, dashed, dotted, and widths.
Additional Information: Three or four line types may be readily distinguished, and two or three line widths may be readily distinguished. A line displayed on a VDU will appear continuous if the separation between resolution elements is less than one minute of arc. To provide the illusion of continuity, graphic lines should contain a minimum of 50 resolution elements per inch.[5908, 0700]

1.3.7-2 Conventional Use of Arrows

In flow charts and other graphics displays, arrowheads should be used in a conventional fashion to indicate directional relations in the sequential links between various elements.[5908]

1.3.7-3 Restricted Use of Borders

Unnecessary borders should not be used in the display.
Additional Information: Borders can add visual clutter to a display and add to information processing time. Borders should only be used for functional purposes, such as to facilitate grouping.[5908]

1.3.7-4 Bordering Single Blocks

A border should be used to improve the readability of a single block of numbers or letters.[5908]

1.3.7-5 Distinctive Borders Around Critical Information

If several labels or messages are clustered in the same area, distinctive borders should be placed around the critical ones only.[5908]

1.3.8-1 Use of Color

Where color is used for coding, it should be employed conservatively and consistently.
Additional Information: The number of colors used for coding should be kept to the minimum needed for providing sufficient information. Once colors are assigned a specific use or meaning, no other color should be used for the same purpose. Casual, arbitrary use of colors on every display may cause displays to appear 'busy' or cluttered. Casual use of color will also reduce the likelihood that significant color coding on particular displays will be interpreted appropriately and quickly by a user.[5908, 0700]

1.3.8-2 Color Coding for Discrete Data Categories

When a user must distinguish rapidly among several discrete categories of data, a unique color should be used to display the data in each category.
Additional Information: Color coding of discrete categories (e.g., setpoint values and actual values) is particularly useful when data items are dispersed on a display. With some display equipment now providing a wide range of different colors, designers may be tempted to exploit that capability by using many different colors for coding. However, such a capability is not useful for coding discrete categories, except that it may allow a designer to select more carefully the particular colors to be used as codes.[5908]

1.3.8-3 Color Coding for Relative Values

When the relative rather than the absolute values of a variable are important, gradual color changes as a tonal code should be used to show the relative values of a single variable.
Additional Information: For example, in displaying tank depth, a saturated blue might be used to show the deepest point, with gradually desaturated blues to show decreasing depth. Gradual color changes should not be used when absolute values are important, or to code data into discrete categories. For example, gradual color changes should not be used to indicate the level of a storage tank as it is drained or filled. Instead, a set of discrete codes indicating dangerous and acceptable levels may be more appropriate.[5908]

1.3.8-4 Color Coding to Draw Attention

Brighter and/or more saturated colors should be used when it is necessary to draw a user's attention to critical data.
Additional Information: Both intensity and saturation should be used to draw a user's attention to critical data. Although saturated and/or intense hues are useful for drawing a user's attention, their overuse will result in a display that is garish and difficult to view for long periods.[5908]

1.3.8-5 Color Selection

Colors for coding should be based on user conventions with particular colors.
Additional Information: Color codes should conform to color meanings that already exist in the user's job. Color codes employing different meanings will be much more difficult to use. Table 1.3 provides general nuclear plant color meanings.[5908, 0700]

1.3.8-6 Pure Blue

Pure blue on a dark background should be avoided for text, for thin lines, or for high-resolution information.[5908]

1.3.8-7 Easily Discriminable Colors

When color coding is used to group or highlight displayed data, all of the colors in the set should be readily discriminable from each other.

Table 1.3 Associations and related characteristics for colors typically used in panel design

Color	Associated Meanings	Attention -Getting Value	Contrasts Well With
Red	Unsafe Danger Alarm state Hot Open/flowing[1] Closed/stopped[1]	Good	White
Yellow	Hazard Caution Abnormal State Oil	Good	Black Dark Blue
Green	Safe Satisfactory Normal state Open/flowing[1] Closed/stopped[1]	Poor	White
Light blue (cyan)	Advisory Aerated water Cool	Poor	Black
Dark Blue	Advisory Untreated water	Poor	White
Magenta[2]	Alarm state	Good	White
White	Advisory Steam	Poor	Green Black Red Dark blue Magenta
Black	Background	Poor	White Light blue Yellow

[1] Meanings associated with red and green colors differ, depending on past experience. Personnel with previous fossil fuel plant experience typically associate an open/flowing state with red and a closed/stop state with green, but reverse associations typically exist for personnel with previous Navy experience.

[2] Magenta on yellow is the nuclear industry standard for radiation caution.

Additional Information: Table 1.4 identifies the wavelengths of colors that are easily discriminable. For example, on a light background: red, dark yellow, green, blue and black, and on a dark background: desaturated red, green and blue, plus yellow and white. If color coding is applied to symbols that subtend small visual angles, which makes color perception difficult, there will be a special need to limit the number of colors used. If colors are used for displaying text, care should be taken to ensure that colored letters are legible as well as discriminable. Since the perception of color depends on ambient lighting, the use of color should be evaluated in situ under all expected lighting conditions.
When color coding is used for discriminability or conspicuity of displayed information, all colors in the set should differ from one another by E distances (CIE L*u*v*) of 40 units or more.
This approach will make available at least 7 to 10 simultaneous colors. Increasing ambient illuminance decreases color purity and, consequently, color discriminability. Accordingly, color measurements should be made under the presumed ambient lighting conditions in which the display will be used. The discriminability of pairs of colors depends on their differences in chrominance and luminance. While an entirely satisfactory metric does not exist which combines these attributes into a single assessment of total color difference, an estimate can be derived by calculating the weighted difference between the locations of the colors in the 1976 CIE Uniform Color Space (CIE UCS L*u*v). Note that this estimate should be used only to ensure discriminability of colors of relatively high luminance. Severe nonlinearities in the UCS limit the usefulness of this metric for colors having small luminance differences. In addition, the specification of small color differences should be treated with caution due to the inherent lack of color uniformity on most VDUs. For full color displays, the reference white can be taken as the white on the display obtained with full-intensity red, D6500 K° or 9300 K°. The difference formula is given in Equation 1.1.[5908]

Table 1.4 Representative set of candidate colors for use in panel design

Color Name	Dominant Wavelength (in nanometers)	Munsell Code
Red	610	5.0R/3.9/15.4
Yellow	582	3.3Y/8.0/143
Green	515	3.2G/4.9/11.1
Light blue (cyan)	494	2.7GB/7.9/6.0
Dark Blue	476	2.9PB/4.1/10.4
Magenta	430	6.5P/4.3/9.2
White		2.5PB/9.5/0.2
Black		N/0.8

1.3.8-8 Unique Assignment of Color Codes
When color coding is used, each color should represent only one category of displayed data.
Additional Information: Color will prove the dominant coding dimension on a display. If several different categories of data are displayed, for example, in red, they will have an unwanted visual coherence that may hinder proper assimilation of information by a user.[5908]

1.3.8-9 Color Contrast

Symbols should be legible and readily discriminable against the background colors under all expected ambient lighting conditions.

Additional Information: For adequate legibility, colored symbols should differ from their color background by an E distance (CIE Yu'v') of 100 units or more. The E distances (CIE Yu'v') are derived from the 1976 CIE UCS color diagram. As with the (CIE L*u*v) distances, caution should be used in assessing legibility for characters in colors having small luminance differences. This caution applies not only to characters in color but also to small luminance differences in background colors and for very small luminance differences between characters in color and background in color. Unusually large or small characters may lead to erroneous estimates of legibility. The elements required for the calculation are the luminance in cd/m² (Y) and the UCS coordinates (u',v') of the text and background. The metric is given in Equation 1.2.[5908]

1.3.8-10 Redundant Color Coding

Color coding should be redundant with some other display feature.

Additional Information: Pertinent information should be available from some other cue in addition to color. Displayed data should provide necessary information even when viewed on a monochromatic display terminal or hardcopy printout, or when viewed by a user with color vision impairment.[5908, 0700]

1.3.8-11 Unplanned Patterns from Color Coding

Color coding should not create unplanned or obvious new patterns on the screen.[5908]

1.3.8-12 Red-Green Combinations

Whenever possible, red and green colors should not be used in combination.

Additional Information: Use of red symbols on a green background should especially be avoided.[0700]

1.3.8-13 Chromostereopsis

Simultaneous presentation of both pure red and pure blue on a dark background should be avoided.

Additional Information: Such a presentation may result in chromostereopsis (an uncomfortable three-dimensional effect).[5908]

1.3.8-14 Pure Red

Dominant wavelengths above 650 nanometers in displays should be avoided.[5908]

Equation 1.1 Calculation of Color Differences

For full color displays, the reference white can be taken as the white on the display obtained with full-intensity red, D6500 K° or 9300 K°. The difference formula is:

$$\Delta E \text{ units (CIE } L^*u^*v^*) = [(L_1^* - L_2^*)^2 + (u_1^* - u_2^*)^2 + (v_1^* - v_2^*)^2]^{0.5}$$

where $L^* = 116(Y/Y_0)^{1.3} - 16;\ 1.0 > Y/Y_0 > .01$

$u^* = 13L^* (u' - u'_0)$

$v^* = 13L^* (v' - v'_0)$

$u' = 4X / (X + 15Y + 3Z)$

$v' = 9Y / (X + 15Y + 3Z)$

u'_0 and v'_0 are the UCS coordinates for the reference white derived from the 1976 UCS.

For reference white, D6500 K° $u'_0 = .198$ and $v'_0 = .468$
For reference white, 9300 K° + 27 MPCD $u'_0 = .181$ and $v'_0 = .454$
(MPCD = Minimum Perceptible Color Difference)

Y is luminance in cd/m^2. Y_0 is the luminance of the reference white.

NOTE: The 9300 K° + 27 MPCD (Minimum Perceptible Color Difference) located the white point at the intersection of the ISO temperature line for 9300 K° with the daylight locus. Y_0 in this use of the ΔE (CIE $L^*u^*v^*$) distance metric is defined differently than suggested by the CIE.

Equation 1.2 Calculation of Color Contrast

The metric is as follows:

$$\Delta E\ (Yu'v') = [(155\ \Delta Y/Y_M)^2 + (367\ \Delta u')^2 + (167\ \Delta v')^2]^{0.5}$$

where Y_M = the maximum luminance of text or background
ΔY = difference in luminance between text and background
$\Delta u'$ = difference between u' coordinates of text and background (see 1.3.8-7)
$\Delta v'$ = difference between v' coordinates of text and background (see 1.3.8-7).

NOTE: The values 155, 367, and 167 are empirically derived weights.

1.3.9-1 Limited Use of Size Coding

Size coding should be used only for applications where displays are not crowded.
Additional Information: Size coding is achieved by varying the size of displayed alphanumerics, labels, and other symbols.[5908]

1.3.9-2 Size Variations

A maximum of three size levels should be used. The major dimensions of the larger symbol should be at least 150 percent of the major dimension of the smaller symbol.
Additional Information: An increase in symbol height must usually be accompanied by a proportional increase in width to preserve a constant aspect ratio and so facilitate symbol recognition.[5908]

1.3.9-3 Size Coding Proportional to Data Value

When the symbol size is to be proportional to the data value, the scaled parameter should be the symbol area rather than a linear dimension such as diameter.
Additional Information: A user's judgment of the 'size' of a symbol will correspond more closely to its area than to its diameter.[5908]

1.3.9-4 Length Coding

For length coding, the maximum number of levels should be six (preferably no more than three).[5908]

1.3.9-5 Establishing Standards for Shape Coding

When shape coding is used, codes should be based on established standards or conventional meanings.
Additional Information: Coding with geometric shapes should be used to help users discriminate different categories of data on graphic displays. Although shape codes can often be mnemonic in form, their interpretation will generally rely on learned association as well as immediate perception. Existing user standards must be taken into account.[5908]

1.3.9-6 Clearly Discriminable Shapes

Shapes used in coding for data groups should be clearly discriminable.
Additional Information: When shape coding is used, the shapes should vary widely and the number of basic shapes should be limited. For example, the elements of one group in a display might be triangles and the elements of a second group might be circles. Approximately 15 different shapes can be readily distinguished, provided the shapes are properly designed. Under adverse viewing conditions, no more than 6 shapes should be used. When needed, other highlighting and graphic techniques (color, filled vs. unfilled, and other 'modifiers') should be used to display different states or qualities of the basic symbol.[5908, 0700]

1.3.9-7 Simple Pattern Codes

When patterns are used to code displayed areas, simple rather than elaborate patterns should be used.
Additional Information: To aid visual discrimination and identification, simple patterns, such as hatching, should be employed rather than complex patterns.[5908]

1.3.9-8 Pattern Coding of Extreme Values

Pattern density should vary with the value of the coded variable so that the least dense pattern is associated with one extreme and the most dense pattern with the other extreme.[5908]

1 INFORMATION DISPLAY
1.3 Display Elements
1.3.10 Highlighting by Brightness and Flashing

1.3.10-1 Easily Recognizable Highlighting
Highlighting should be easily recognizable and used to attract the user's attention to special conditions, items important to decision-making or action requirements, or as a means to provide feedback.[5908, 0700]

1.3.10-2 Minimal Highlighting
Highlighting of information should be minimized.
Additional Information: A rule of thumb for displays of nominal conditions is to limit the maximum amount of highlighting to 10 percent of the displayed information. If a large proportion of the displayed items are highlighted, the highlighting will no longer be effective for directing the user's attention.[5908]

1.3.10-3 Consistency
A particular highlighting method should be used consistently.
Additional Information: Highlighting methods associated with emergency conditions should not also be used in association with normal conditions.[5908, 0700]

1.3.10-4 Removing Highlighting
If highlighting is used to emphasize important display items, it should be removed when it no longer has meaning.
Additional Information: If highlighting identifies an error, that highlighting should be removed when the error is corrected.[5908]

1.3.10-5 Appropriate Use of Brightness Coding
Coding by differences in brightness should be used for applications that require discrimination between only two categories of displayed items on a VDU and up to three on a transilluminated display.
Additional Information: Brightness coding should not be used in conjunction with shape or size coding.[5908, 0700]

1.3.10-6 Significance of Brightness Levels
High brightness levels should be used to signify information of primary importance, and lower levels should be used to signify information of secondary interest.[5908]

1.3.10-7 Intensity Levels for Brightness Coding
Levels approximating 33 percent and 100 percent of the display luminance should be used for brightness coding.
Additional Information: The intensities used should not be less than 6 ft-L (20 cd/m²). Intensity coding should not be used for displays with a maximum display luminance of less than 18 ft-L (60 cd/m²) or more than 29 ft-L (100 cd/m²).[5908]

1.3.10-8 Inverse Video
Inverse video should be used primarily for highlighting in dense data fields or to indicate selection of on-screen objects and information.[5908, 0700]

1.3.10-9 Appropriate Use of Flash Coding
Flashing should be used when a displayed item implies an urgent need for attention or action, but not in displays requiring attention to detail or reading of text.
Additional Information: An 'off' condition should never be used to attract attention to a message. Flashing should not be used as a means to highlight routine information. Flashing should only be used as an alerting/warning code. If used sparingly, flashing symbols are effective in calling a user's attention to

displayed items of unusual significance. Flash coding generally reduces search times, especially in dense displays.[5908, 0700]

1.3.10-10 Flash Coding for Text
When a user must read a displayed item that is flash coded, an extra symbol such as an asterisk or arrow to mark the item should be used, and the marker symbol should flash rather than the item itself.
Additional Information: This practice will draw attention to an item without detracting from its legibility. Flashing characters may have somewhat reduced legibility, and may cause visual fatigue.[5908]

1.3.10-11 Small Area
Only a small area of the screen should flash at any time.[5908]

1.3.10-12 Coding by Flash Rate
No more than two flash rates should be used.
Additional Information: The differences between the two flash rates should be at least 2 Hz. The slow flash should not be less than 0.8 Hz and the fast flash rate should not be more than 5 Hz. The percentage of time that the image is 'on' should be greater than or equal to the time that it is 'off.' A 50 percent duty cycle is preferred. When a single blink rate is used, the rate should be roughly 2-3 blinks per second with a minimum of 50 msec 'on' time between blinks.[5908, 0700]

1.3.10-13 Flash Suppression
Event acknowledgement or flash suppression keys should be provided.[5908]

1.3.10-14 Long-Persistence Phosphor Displays
Flashing should not be used with long-persistence phosphor displays.[5908]

1.3.10-15 Flash Rate for Critical Information
When two rates are used, the higher rate should apply to the more critical information.[0700]

1.3.11-1 Appropriate Use of Auditory Signals

Auditory signals should be provided to alert the user to situations that require attention, such as an incorrect input action or a failure of the HSI to process an input from the user.
Additional Information: An auditory signal should provide users with a greater probability of detecting the triggering condition than their normal observations would provide in the absence of the auditory signal.[5908]

1.3.11-2 Dedicated Use

Systems used to transmit non-verbal auditory signals should be used only for that purpose.[0700]

1.3.11-3 Localization

Auditory signals should provide localization cues that direct users to those control room workstations where attention is required.[0700]

1.3.11-4 Selection

Auditory signals should be selected to avoid interference with other auditory sources, including verbal communication.[0700]

1.3.11-5 Signal Priority Distinction

Advisory or caution signals should be readily distinguishable from warning signals and used to indicate conditions requiring awareness, but not necessarily immediate action.[5908]

1.3.11-6 Association with Visual Warnings

Auditory alerts, as well as caution and warning sounds, should accompany visual displays.
Additional Information: The audio signal should be used to alert and direct attention to the appropriate visual display.[5908]

1.3.11-7 Unique Signal-Event Association

Once a particular auditory signal code is established for a given operating situation, the same signal should not be designated for some other display.
Additional Information: The meaning of each auditory signal should be clear and unambiguous.[5908, 0700]

1.3.11-8 Total Number of Simple Signals

If the audio signal varies on one dimension only (such as frequency), the number of signals to be identified should not exceed four.[5908]

1.3.11-9 Use with Several Visual Displays

One audio signal may be used in conjunction with several visual displays, provided that immediate discrimination is not critical to personnel safety or system performance.[5908]

1.3.11-10 Confusable Signals

Audio warning signals that might be confused with routine signals or with other sounds in the operating environment should not be used.

Additional Information: Auditory signals intended to alert the user to a malfunction or failure must be different from routine signals such as bells, buzzers, and normal operating noises. Examples of such signals include trains of impulses that resemble electrical interference, or signals similar to noise generated by air conditioning or other equipment. The frequency of a warning tone should be different from that of the electric power employed in the system, to preclude the possibility that a minor equipment failure may generate a spurious signal.[5908, 0700]

1.3.11-11 Signal Compatible with Environment
The intensity, duration, and source location of the signal should be compatible with the acoustical environment of the intended receiver as well as with the requirements of other personnel in the signal area.
Additional Information: Audio signals should not startle listeners, add significantly to overall noise levels, or prevent communication among users.[5908]

1.3.11-12 Turning Off Non-Critical Auditory Signals
Noncritical auditory signals should be capable of being turned off at the discretion of the user.
Additional Information: A simple, consistent means of acknowledging and turning off warning signals should be provided.[5908]

1.3.11-13 Indicating Who is to Respond
When the signal must indicate which user (of a group of users) is to respond, a simple repetition code should be used.[5908]

1.3.11-14 Direction of Sound
Sound sources (speakers or buzzers) should direct sound toward the center of the main operating area.[0700]

1.3.11-15 Signal Bending Around Obstacles
When an audio signal must bend around major obstacles or pass through partitions, its frequency should be less than 500 Hz.[5908]

1.3.11-16 Audibility
Auditory alert and warning signals should be audible in all parts of the control room.
Additional Information: The guideline applies to warnings that need to be heard by all members of the operating crew. Some signals may be pertinent to a particular functional role and therefore may need to be heard only at workstations supporting that function. Where there is a concern that important information might be missed if the workstation is temporary not staffed, a general alert can be added if there is no response at the workstation for a specified period.[0700]

1.3.11-17 Signal Intensity
The intensity of auditory signals should be set to unmistakably alert and get a user's attention.
Additional Information: A signal should generally yield a 20dB signal-to-noise ratio in at least one octave band between 200 and 5000 Hz. This level should apply throughout the main operating area. (A 20dB differential may not be necessary for all signals and all environments.) Auditory signal intensity should not cause discomfort or 'ringing' in the ears. Auditory signal intensities should not exceed 90 dB(A), except for evacuation signals, which may be up to 115 dB(A).[0700]

1.3.11-18 Signal Travel Over 1000 Feet
When an audio signal must travel over 1000 feet, its frequency should be less than 1000 Hz.[5908]

1.3.11-19 High or Unknown Noise Environments
When the noise environment is unknown or expected to be difficult to penetrate, audio signals should have a shifting frequency that passes through the entire noise spectrum and/or be combined with a visual signal.[5908]

1.3.11-20 Masking
Audio warning signals should not interfere with any other critical functions or warning signals, or mask any other critical audio signals.[5908]

1.3.11-21 Failure of Auditory Signals
The audio display device and circuit should be designed to preclude warning signal failure in the event of system or equipment failure and vice versa.
Additional Information: Failure of auditory signal circuitry should not adversely affect plant equipment.[5908, 0700]

1.3.11-22 False Alarms
Auditory alarm systems should be designed so that false alarms are avoided.[0700]

1.3.11-23 Distinctive Coding
Coding methods should be distinct and unambiguous, and should not conflict with other auditory signals.[0700]

1.3.11-24 Not Contradictory
Similar auditory signals must not be contradictory in meaning with one another.[0700]

1.3.11-25 Pulse Coding
Auditory signals may be pulse coded by repetition rate. Repetition rates should be sufficiently separated to ensure discrimination.[0700]

1.3.11-26 Frequency Change Coding
If modulation of the frequency (Hz) of a signal denotes information, center frequencies should be between 500 and 1000 Hz.[0700]

1.3.11-27 Discrete Frequency Coding
If discrete-frequency codes are used for audible signal coding, frequencies should be broad band and widely spaced within the 200 to 5000 Hz range (preferably between 500 and 3000 Hz).
Additional Information: The signal frequency of auditory displays should be compatible with the midrange of the ear's response curve, i.e., the use of signals with frequencies to which the ear is less sensitive should be avoided. No more than 4 separate frequencies should be used.[5908, 0700]

1.3.11-28 Coding by Intensity
Using the intensity of a sound to convey information is not recommended.[0700]

1.3.11-29 Testing
It should be possible to test the auditory signal system.[0700]

1.4-1 Display Update Rate Requirements

The maximum update rate should be determined by the time required for the user to identify and process the changed feature of the display.
Additional Information: The minimum and maximum update rate should be determined by the rate of change in the data, the requirements of the task, and the user's ability to process the information. See Guideline 1.4-3.[5908]

1.4-2 User Control of Display Update Rate

The user should be capable of controlling the rate of information update on the display, but the allowable rate should not exceed that capable of being met by the information source and the processing equipment.[5908]

1.4-3 Changing Values

Changing alphanumeric values that the user must reliably read should not be updated more often than once per second.
Additional Information: Changing values which the viewer uses to identify rate of change or to read gross values should not be updated faster than 5 times per second, nor slower than 2 per second, when the display is to be considered as real-time.[5908]

1.4-4 Initial Erasure to Replace Changed Data

When the computer generates a display to update changed data, the old items should be erased before adding new data items to the display.
Additional Information: This practice will avoid any momentary user confusion that might result from seeing portions of old data being overwritten and partially overlapped by new data.[5908]

1.4-5 Display Motion

Items on a graphic display should not move faster than 60 degrees of visual angle per second, with 20 degrees per second preferred.
Additional Information: During motion, gross visual attributes and spatial orientation are usually preserved while small details may be lost or processing slowed. Perception of fast moving stimuli may be incomplete.[5908]

1.4-6 Data Sampling Rate

The sampling rate for each critical plant variable should result in no meaningful loss of information in the data presented.[0800]

1.4-7 Time Delay

The time delay from when the sensor signal is sampled to when it is displayed should be consistent with the user's task performance requirements.[0800]

1.4-8 Accuracy

Each variable should be displayed with an accuracy sufficient for the users to perform their tasks.
Additional Information: The reviewer should determine the required accuracy by means of task analysis or through discussions with users.[0800]

1.4-9 Invalid Data

Variables that are subject to validation (e.g., checks for accuracy) should be identified and an indication should be provided when these data are invalid.

Additional Information: When data fails to meet the specified criteria for validity and thus is suspected of being of poor quality, an indication of validation failure should be provided.[0800]

1.4-10 Unvalidated Data

When checks for accuracy could not be performed, the unvalidated status of the data should be clearly indicated.

Additional Information: When checks for accuracy cannot be performed (e.g., a processor or redundant sensors are not available) the data is unvalidated. (Unvalidated data may be determined to be either valid or invalid as a result of the data validation process.) Under some conditions, unvalidated data may be useful to trained users in determining the safety status of the plant and determining whether human intervention is needed. Clear indications of the data's unvalidated status should be provided so the user can exercise judgment in interpreting it.[0800]

1.4-11 Data Entered by Personnel

Data entered by personnel should be identified such that it is easily distinguished from sensor data or validated data.[0800]

1.5-1 Display Screen Partitioning for HSI Functions

A standard display screen organization should be evident for the location of various HSI functions (such as a data display zone, control zone, or message zone) from one display to another.
Additional Information: Consistent display screen organization will help establish and preserve user orientation. Reserved screen areas, for example, might be used for a display title, alarms, display control options, instructions, error messages, and menus. Display formats should be consistent with accepted usage and existing user habits.[5908, 0700]

1.5-2 Distinctive HSI Functional Organization and Display Elements

The HSI functional zones and display features should be visually distinctive from one another, especially for on-screen command and control elements (which should be visibly distinct from all other screen structures).
Additional Information: Different display areas can be separated by blank spaces, lines, or some other form of visual demarcation. Areas used to display data, control options, and instructions should be distinct from one another.[5908, 0700]

1.5-3 Display Title

Every display should begin with a title or header at the top, briefly describing the contents or purpose of the display.
Additional Information: The title may be incorporated as part of the display itself, as a window title, or as a label mounted on the display device. If the title is incorporated into the display, there should be at least one blank line between the title and the body of the display.[5908]

1.5-4 Display Identification

Every display page should have a unique identification to provide a reference for use in requesting the display of that page.
Additional Information: The page identification could be its title, or an alphanumeric code or abbreviation that is prominently displayed in a consistent location. It should be short enough (3-7 characters) and/or meaningful enough to be learned and remembered easily. At least one blank line between the title and the body of the display should be provided.[5908]

1.5-5 Hierarchy of Titles

Where displays have several levels of titles (and/or labels), the system should provide visual cues to aid users in distinguishing among the levels in the hierarchy.
Additional Information: Character size variation and indentation are two common methods of expressing a hierarchy. Bolding, underlining and letter case are also frequently used, but conventions for their use have not been well established.[5908]

1.5-6 Display Simplicity

Displays should present the simplest information consistent with their function; information irrelevant to the task should not be displayed, and extraneous text and graphics should not be present.
Additional Information: Displayed information should be tailored to user needs, providing only necessary and immediately usable data for any user action; displays should not be overloaded with extraneous information. Information not needed for the current task (e.g., patent notices, manufacturer's trademark or address) should not be displayed. In general, the fewest lines or objects in a graphical display should be used.[5908, 0700]

1.5-7 Redundancy

Redundancy in the presentation of information items should be limited to cases where needed for backup or to avoid excessive movement.[0700]

1.5-8 Uncluttered Displays

Displays should be as uncluttered as possible.
Additional Information: Display packing density should not exceed 50 percent. Density should be minimized for displays of critical information. Displays consisting largely of alphanumerics generally should not exceed 25 percent density. Displays composed largely of graphics may be more dense. The unused area should be distributed to separate logical groups, rather than having all unused area on one side. When a display contains too much data for presentation in a single frame, the display should be partitioned into separately displayable pages (multipage displays) or displayed through frames/viewports (such as scrollable windows).[5908]

1.5-9 Task-Related Partitioning of Displays

When displays are partitioned into multiple pages, function/task-related data items should be displayed together on one page.
Additional Information: Relations among data sets should appear in an integrated display rather than partitioned into separate display pages. When dividing a display, it is important to keep task-related data together to avoid (1) requiring the user to frequently switch back and forth between pages when performing the task or (2) requiring users to remember information from one page while looking at another.[5908]

1.5-10 Numbering Pages of Multipage Displays

Users working with multipage displays should be provided with a page location reference within the display sequence.
Additional Information: Each page of a multipage display sequence should be numbered. Typically, the phrase "page x of y" is used for this purpose. A recommended format is to identify pages by a note immediately to the right of the display title. Leading zeros should not be used in the display of page numbers.[5908]

1.5-11 Display Frame Location Cues

Users viewing a portion of a larger display should be provided with an indication of the location of the visible position of a display (frame) in the overall display.
Additional Information: A graphic indication of the frame's location in the overall display will provide a visual context to help a user maintain a conceptual orientation between the visible part and the whole display. For example, in a corner of the frame, the computer might show a rectangle representing the overall display, in which a smaller rectangle is placed to indicate the position and extent of the currently visible portion of that display. Sectional coordinates should be used when large schematics must be panned or magnified.[5908, 0700]

1.5-12 Grouping of Information in a Display

Information on a display should be grouped according to principles obvious to the user, e.g., by task, system, function, or sequence, based upon the user's requirements in performance of the ongoing task (see Table 1.5).

Additional Information: Table 1.5 provides grouping principles and examples of their appropriate uses. Grouping conventions should be used consistently within sets of displays of a particular type. For example, grouping by function may take precedence over other grouping methods for mimic-type plant displays. Grouping for data comparison may take precedence over other grouping methods for displays that present only text. Since users' tasks can vary, advanced HSIs should provide the user with the flexibility to group information by alternative grouping principles to reflect changes in task requirements.[5908]

Table 1.5 Information grouping principles

Grouping Method	Conditions for Appropriate Use
Task	Information necessary to support a user's task should be grouped together.
Sequence of Use	Where displayed information is used in spatial or temporal order, the information should be grouped by sequence of use to preserve that order. For example, data in a VDU display should match the order of steps in an associated paper procedure referencing the data. Information should be arranged sequentially from left to right or top to bottom.
Frequency	Where some information is used more frequently than others, the frequently used information should be grouped at the top or some other predefined location of the display.
Data Comparison	When users must analyze sets of data to discern similarities, differences, trends, and relationships, the display format should be structured so that the data are consistently grouped. Grouping similar items together in a display format improves their readability and can highlight relationships between different groups of data. Grouping can be used to provide structure in the display and aid in the recognition and identification of specific items of information.
Importance	Information that is particularly important should be grouped at the top or some other predefined location of the display.
Function	Where a set of information has strong functional relationships such as lower-level status indications that are related to a higher-level plant system (e.g., main feedwater) or function (e.g., core heat removal), the information should be grouped together to help illustrate those relationships.
Alphanumeric or Chronological Sequence	When items or data must be selected from a list or where there is no appropriate logic for grouping data according to some other principle, alphabetical or chronological grouping should be employed.

1.5-13 Demarcation of Groups

When information is grouped on a display, the groups should be made visually distinct by such means as color coding or separation using blanks or demarcation lines.[5908]

1.5-14 Display Background Color

A uniform nondistracting background color should be used with a hue/contrast that allows the data (foreground) to be easily visible and which does not distort or interfere with the coding aspects of the display.

Additional Information: Patterned backgrounds should be avoided. Background color can influence the way a user perceives a color symbol (e.g., shapes and lines). When a color is surrounded by another color, the surrounding color can change the appearance of the enclosed color. For example, green on a yellow background will appear more blue than the same shade of green on a blue background. Different colored backgrounds may be used as a coding method to meaningfully group information, provided that colors are chosen to maintain good contrast and legibility.[5908]

1.5-15 Labeling Scrollable and Multipage Displays

General labels and row/column labels should remain along the top (or bottom) and left (or right) edges of the display.

Additional Information: Display formats such as tables, lists, forms, and graphs may be scrollable. When this capability is available, all labeling information should be preserved.[5908]

1.5-16 Data Overlays

Displayed information which temporarily overlays and obscures other display data should not erase the overlaid data.

Additional Information: Overlay displays that are generated by the display system can allow additional information to be shown when needed and then removed to reduce visual clutter. Overlays are acceptable when they improve the user's interpretation of displayed information. They should not distract the user or interfere with the observation of displayed information.[5908, 0800]

1.6.1-1 VDU Resolution

The display should have adequate resolution; i.e., users should be able to discriminate all display elements and codes from maximum viewing distance.

Additional Information: The Modulation Transfer Function Area (MTFA) is a measure of resolution; it should have a value of at least 5. This value may be directly developed from microphotometric measurements, or for monochrome VDU displays, it may be estimated using the formula given in Equation 1.3.[5908]

Equation 1.3 Calculation of Modulation Transfer Function Area

This value may be directly developed from microphotometric measurements, or for monochrome VDU displays, it may be estimated using as follows:

$$MTFA = 10A$$

where $A = b_0 + b_1V_D + b_2W_D + b_3A_B + b_4V_DA_B + b_5W_DA_B + b_6L_MA_B + b_7V_DL_MA_B$,

where $b_0 = 1.48$ $b_1 = 0.60$ $b_2 = -1.07$ $b_3 = -1.62$
$b_4 = -0.17$ $b_5 = 0.59$ $b_6 = 0.48$ $b_7 = 0.06$

where V_D = Viewing Distance in meters (m), when $0.30\ m < V_D < 1.02\ m$,

W_D = the full width of the Gaussian spot at the half-amplitude point in mm, when $0.15\ mm < W_D < 0.76\ mm$,
$A_B = \log_{10}$ of the reflected luminance (in cd/m^2) from the display screen, when $0 < A_B < 1.7$ (= 50 cd/m^2), and
$L_M = \log_{10}$ of the peak display luminance (in cd/m^2), when 1.3 (= 20 cd/m^2) $< L_M <$ 2.54 (= 343 cd/m^2).

1.6.1-2 VDU Contrast

The contrast ratio of the display should be greater than 3:1; a contrast ratio of 7:1 is preferred.

Additional Information: Either display polarity – that is, dark characters on a light background – or light characters on a dark background is acceptable provided it meets the requirements for resolution (1.6.1-1) and luminance (1.6.1-7). When ambient illumination in the vicinity of the VDU is high, dark characters on a light background are preferred. Contrast ratio is calculated as follows:

$$CR = Lmax/Lmin$$

where Lmax is the higher luminance of the background or of the character, and Lmin is the lower luminance of the two.

These values include the contribution from ambient light. Small characters, i.e., characters between 10 and 17 minutes of arc should have minimum luminance modulation (M) of:

$$M = 0.3 + 0.07\ (20 - S)$$

where S is the vertical size of the character set, in minutes of arc, and Luminance modulation is calculated $M = (Lmax-Lmin)/(Lmax + Lmin)$.[5908, 0700]

1.6.1-3 Flicker

The display should be 'flicker free.'
Additional Information: The regeneration rate should be above the critical frequency for fusion so that flicker is not perceptible.[5908, 0700]

1.6.1-4 Geometric stability

The display should be free of 'jitter.'
Additional Information: Variations in the geometric location of a picture element should be no more than 0.0002 inch per inch (0.0002 mm per mm) of viewing distance over a period of one second. This may be expressed as

$$VD \times 0.0002 >= (H^2 + V^2)^{0.5}$$

where VD is the viewing distance and H and V are the maximum excursions of picture element centers, horizontally and vertically.[5908]

1.6.1-5 Image Continuity

The display should maintain the illusion of a continuous image, i.e., users should not be able to resolve scan lines or matrix spots.
Additional Information: It does not matter if the raster is scanned or directly addressed.[5908]

1.6.1-6 VDU Image Linearity

The display should be free of geometric distortion.
Additional Information: Linearity, the horizontal displacement of a symbol position relative to the symbol positions directly above and below the symbol position, should vary by not more than five percent of the symbol box height. The vertical displacement of a symbol position, relative to the symbol positions to the right and left of the symbol position, should vary by not more than five percent of the symbol box height. Nonlinearity of any column or row should be not more than two percent of the length of the column or row. Lines and columns should be parallel and orthogonal one to the other within the limits of the linearity requirement. This may be expressed as:

$$0.04\ (\text{Shorter edge}/\text{Longer edge}) >= |\text{Diag1}/\text{Diag2}| - 1$$

The size of a specific symbol anywhere on the display should not vary by more than 10 percent, regardless of its location within the image area. This is expressed as follows:

$$2(h2 - h1)/(h2 + h1) <= 0.1 \quad \text{and} \quad 2(w2 - w1)/(w2 + w1) < 0.1$$

where h is the height of the symbol and w is the width of the symbol. When all the character positions on the screen are filled with 'H's or 'M's of the same character set, h1 is the height of the smallest character, h2 is the height of the largest character, w1 is the width of the smallest character, and w2 is the width of the largest character.[5908]

1.6.1-7 VDU Display Luminance

The display should have adequate luminance.
Additional Information: Either the character or its background, whichever is of higher luminance, should achieve a luminance of at least 10 ft-L (35 cd/m²) or more. The preferred display luminance is 23 to 47 ft-L (80 to 160 cd/m²).[0700, 5908]

1.6.1-8 Luminance Uniformity

All luminances that are supposed to be the same should appear the same.

Additional Information: Luminance uniformity, the variation from the center to the edge of the active area of the display, should not vary more than 50 percent of the center luminance. Unintended luminance variations, within half a degree of arc, calculated from the design viewing distance anywhere on the display, should be less than 50 percent. For an intended uniform luminance, the variation in luminance from the center of the display to the edge or any portion thereof should not vary by more than 50 percent of the center luminance. This measurement is to be made in a dark room.[5908]

1.6.1-9 VDU Controls
Frequently used controls should be easily visible and accessible to the VDU user from the normal working position.
Additional Information: The controls should be designed so that they are not accidentally actuated. They should give a clear indication of their function and current setting.[5908, 0700]

1.6.1-10 VDU Luminance Control
A control to vary the VDU luminance from 10 percent of minimum ambient luminance to full luminance should be provided.[5908, 0700]

1.6.1-11 Display Devices for Reducing Interface Management Demands
The number of display devices provided in the HSI should be sufficient to maintain interface management demands at a level that does not impair user performance
Additional Information: The number of display devices should not be so high that the devices cannot fit within the recommended viewing areas of workplace design and, thus, cannot be easily monitored or operated effectively by the users. However, the number of display devices should not be so low that the interface management demands required for accessing and using displays detracts from the user's overall performance on primary tasks.[6546]

1.6.1-12 Display Devices for Concurrent Tasks
The number of display devices provided in the HSI should be sufficient to support all tasks that must be performed concurrently by each user.
Additional Information: Table 6.1 describes some tasks supported by display devices that should be addressed by requirements for the necessary number of display devices.[6546]

1.6.2-1 Resolution
Users should be able to resolve all important display detail at the maximum viewing position.[5908]

1.6.2-2 Size of Characters
The height of letters and numerals should not subtend less than 15 minutes of visual angle as measured at the maximum viewing distance.[5908]

1.6.2-3 Superposed Characters
The contrast polarity of superposed characters should be appropriate for the method of projection.
Additional Information: For subtractive superposition (at the source), characters should be presented as dark markings on a transparent background. For additive superposition (at the screen), characters should be presented as light markings on an opaque background. Colored markings against colored backgrounds of comparable brightness should be avoided.[5908]

1.6.2-4 Projected Display Luminance Ratio
The luminance ratio provided by the projection system should be adequate for the type of material being projected.
Additional Information: The contrast ratio is defined as image or subject luminance divided by the nonimage or background luminance. Under optimal ambient lighting conditions, the contrast ratio for optically projected displays should be 500:1. Minimum contrast ratios are as follows:

- For viewing charts, printed text, and other linework via slides or opaque projectors, the minimum contrast ratio is 5:1
- For projections that are limited in shadows and detail, such as animation and photographs with limited luminance range, the minimum contrast ratio is 25:1
- For images that show a full range of colors (or grays in black-and-white photographs), the minimum contrast ratio is 100:1[5908]

1.6.2-5 Projected Display Image Luminance
Image luminance and light distribution should be uniform. The luminance of the screen center at maximum viewing angle should be at least half its maximum luminance.[5908]

1.6.2-6 Minimize Keystone Effects
If projected displays are used, projector and screen should be arranged so as to minimize 'keystone effect,' i.e., distortion of projected data proportions due to non-perpendicularity between projector and screen.[5908]

1.6.3-1 Placement of Printers
Printers should be located within the main operating area because they must be verified and attended by the user.[0700]

1.6.3-2 Legibility
Print output should be free from character line misregistration, character tilt, smear, or glare.
Additional Information: Hard-finish matte paper should be used to avoid smudged copy and glare.[5908, 0700]

1.6.3-3 Contrast
A minimum contrast ratio of 4:1 should be provided between the printed material and the background on which it is printed.[5908]

1.6.3-4 Illumination
The printer should be provided with internal illumination if the printed matter is not legible in the planned operational ambient illumination.[5908]

1.6.3-5 Visibility
When used for real-time applications, the printed matter should not be hidden, masked or obscured in a manner that impairs direct reading.
Additional Information: The user should always be able to read the most recently printed line. Data should be visible through the window of the printer and not require opening a cover to expose it.[5908, 0700]

1.6.3-6 User Annotation Capability
Recording devices used in real-time applications should allow users to write on or mark the printed matter while it is still in the printer or plotter.
Additional Information: For example, it should be convenient to annotate recordings with date and time markings, with paper speed if varied from normal, with parameter identification, or with any other relevant information.[5908]

1.6.3-7 Take-up Provision
A take-up device should be provided for printed material.
Additional Information: The take-up device should require little or no attention and should have a capacity at least equal to the feed supply.[5908, 0700]

1.6.3-8 Indication of Supply of Materials
A positive indication should be provided of the remaining supply of printing materials (e.g., paper, toner, and ribbons).[5908, 0700]

1.6.3-9 Quality of Expendable Materials
Pens, inks, and paper should be of a quality to provide clear, distinct, and reliable marking.
Additional Information: For example, ink should not clog pens or smudge on the paper.[0700]

1.6.3-10 Availability of Expendable Material
Paper, ink, and other user-maintained expendables should be provided and accessible in the control room.[0700]

1.6.3-11 Ease of Routine Replenishment
Printer design should permit quick and easy replenishment of paper, toner, ribbons, or ink.

Additional Information: Procedures for reloading expendable materials should be displayed on an instruction placard attached to the printer or plotter.[0700]

1.6.3-12 Smudging/Smearing
The hardcopy should be resistant to smudging or smearing when handled by users.[5908]

1.6.3-13 Job Aids
Graphic overlays should be provided where these may be critical to proper interpretation of graphic data as it is being generated.
Additional Information: Such aids should not obscure or distort the data.[5908]

1.6.3-14 Scale Design
Plotter scales should be numbered and marked according to the principles of display design and scale marking given in Sections 1.1, General Display Guidelines, and 1.3.6, Scales, Axes, and Grids.[0700]

1.6.3-15 Scale Compatibility
Scales printed on the recording paper should be the same as the scales shown on the recorder.[0700]

1.6.3-16 Tearing-Off Continuous Recordings
It should be easy for users to tear off records printed on rolled paper.[0700]

1.6.3-17 Paper-Speed Adjustability
Provide a high paper-speed option to run out records for detachment and a selection of lower speed options to permit adjustment of the time scale so that rate-of-change information can be indicated.[0700]

1.6.3-18 Labeling
Labels should identify the parameters recorded.
Additional Information: With multiple-pen recorders, parameters should be listed in the order of the associated scales on the recorder.[0700]

1.6.3-19 Ink Colors
Each pen should use a different colored ink to permit channel identification.
Additional Information: Colors selected should be distinctly different and should afford good contrast with the paper.[0700]

1.6.3-20 Channel Overload
The recorder should not be loaded beyond its designed channel capacity because this adds complexity to the analysis and prolongs sampling cycle time.[0700]

1.6.3-21 Channel Identification on Instrument
Discrete recorders should be equipped to display the channel being plotted in an easily viewed manner.
Additional Information: Viewing from odd and inconvenient angles should not be imposed.[0700]

1.6.3-22 Channel Identification on Recording
Number-printing mechanisms should be designed and maintained to provide clear, sharp, and small numbering to avoid crowding of data and consequent analysis problems.[0700]

1.6.3-23 Channel Selection Capability

Provisions should be made to select any single channel for immediate display without awaiting completion of a sampling cycle.[0700]

1.6.4-1 Circular Scales
Scale values should increase with clockwise movement of the pointer.[0700]

1.6.4-2 Vertical Straight Scales
Scale values should increase with upward movement of the pointer.[0700]

1.6.4-3 Horizontal Straight Scales
Scale values should increase with pointer movement to the right.[0700]

1.6.4-4 Pointer Tip Form
Pointer tips should be simple.
Additional Information: Pointer tips should be selected to minimize concealment of scale graduation marks or numerals.[0700]

1.6.4-5 Pointer Positioning Relative to Scale
Pointer tip should extend to within about 1/16 inch of (but not overlap) the smallest graduation marks on the scale.
Additional Information: Overlap of the pointer and scale graduation marks is acceptable, if the pointer does not obscure graduations or numerals and impair reading accuracy. Pointers should be mounted to avoid parallax errors.[0700]

1.6.4-6 Pointer Visibility
Pointer/background contrast and pointer size should be adequate to permit rapid recognition of pointer position.[0700]

1.6.4-7 Zone Markings
Zone markings should be conspicuous and distinctively different for different zones (see Figure 1.10).
Additional Information: Zone marking should not interfere with reading of quantitative markings. Differently colored bands are often used to indicate, e.g., the normal operating range, upper/lower limits, and danger range of a parameter. If color is used for coding, color should be related to meaning (see Guideline 1.3.8-5).[0700]

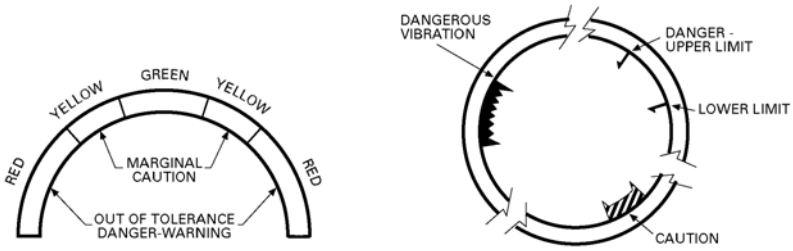

Figure 1.10 Zone markings

1.6.4-8 Consistency
To facilitate reading of meters and prevent misreading, the orientation of scale markings should be consistent.

Additional Information: The factors that are significant here are the orientation of numerals and of scale end-points on dials.[0700]

1.6.4-9 Numerical Orientation
Individual numerals on any type of fixed scale should be vertical.
Additional Information: This holds true for circular as well as linear scales.[0700]

1.6.4-10 Zero-Point Orientation
Where pointer movement is more than 360 degrees, the zero point should be located at the 12 o'clock position.
Additional Information: Where positive and negative values are displayed around a zero or null position, the zero or null point should be located at the 12 o'clock position.[0700]

1.6.4-11 End-Point Indication on Partial-Revolution Scales
Where the scale covers less than a full rotation of the pointer, scale end-points should be indicated by a break in scale.
Additional Information: The break should be at least one numbered interval in length. The break should be oriented at the 6 o'clock position.[0700]

1.6.4-12 Moving-Scale Meters Versus Fixed-Scale Moving-Pointer Types
Moving-scale fixed-pointer meters should be avoided in favor of the more effective fixed-scale moving-pointer types.
Additional Information: Moving-scale fixed-pointer meters are infrequently seen in nuclear power plant control rooms.[0700]

1 INFORMATION DISPLAY
1.6 Display Devices
1.6.5 Light Indicators

1.6.5-1 Precautions to Assure Availability
Dual-bulb or dual-filament light assemblies should be used.
Additional Information: Bulb-test capability should be provided. Design should encourage immediate replacement of burned-out bulbs by providing for rapid and convenient bulb replacement with power on and without hazard to personnel or equipment.[0700]

1.6.5-2 Unambiguous Light Status
Lights should not appear to be energized when they are off, or vice versa.
Additional Information: Ambient light sources should be selected, located, or controlled to avoid reflections or refractions. See Section 12.1.2.3, Illumination.[0700]

1.6.5-3 Positive Status Indication
System/equipment status should be conveyed by illuminated indicators, and never by the absence of illumination.[0700]

1.6.5-4 Use as Alerting Indicators
Alerting the users to unfavorable status should be a function of the alarm system and not assigned to light indicators.[0700]

1.6.5-5 Identification of Meaning
Where the meaning of a light indicator is not apparent, labeling should be provided close to the indicator showing the condition that the light represents.[0700]

1.6.5-6 Light Intensity
The illuminated indicator should be at least 10 percent greater in light intensity than the surrounding panel as measured by a spot photometer.[0700]

1.6.5-7 Visibility of Light Indicators
When using legend light indicators, make sure contrast and ambient/transilluminated conditions are considered.
Additional Information: Light intensity of the illuminated indicators should be at least 10 percent greater than the surrounding panel as measured by a spot photometer. Legends should be legible under ambient illumination with indicator lights off. Legend lettering should contrast well with background under both ambient and transilluminated lighting.[0700]

1.6.5-8 Legend Design
General legend design should be consistent throughout the control room.
Additional Information: Lettering should be simple, and should follow Guidelines 1.3.1-2 and 1.3.1-4 for style and size. Symbolic legends should be clear and unambiguous as to their meaning. Text should be short, concise, and unambiguous. Legend messages should contain no more than three lines of text. Nomenclature and abbreviations should be standard and consistent with usage throughout the control room and in the procedures. Legends should be worded to tell the status indicated by glowing of the light.[0700]

1.6.5-9 Distinguishability from Legend Pushbuttons
Illuminated legend indicators should be readily distinguishable from legend pushbuttons by form, size, or other factors.

Additional Information: Guidelines for legend pushbuttons are given in Section 3.3.1.3, Legend Pushbuttons.[0700]

1.6.5-10 Color Coding
The color of the legend background under transillumination should be clearly identifiable and should conform to the general color code established for the control room.
Additional Information: See Section 1.3.8, Color.[0700]

1.6.5-11 Replacing Indicator Lenses
Provisions should be made to prevent interchanging indicator lenses.
Additional Information: The means for prevented lenses from being interchanged can be mechanical or procedural.[0700]

1.6.6-1 Orientation

Multi-digit numbers formed by several elements (e.g., drums and LED arrays) should be read horizontally from left to right.
Additional Information: Numbers should not be oriented vertically (i.e., read top to bottom).[0700]

1.6.6-2 Width-to-Height Ratio in Drum Displays

To compensate for the distortion imposed by the curved surface of the drum, counter numerals should reflect a width-height ratio of 1:1.
Additional Information: Do not use a 3:5 ratio as recommended for numerals of other displays.[0700, 5908]

1.6.6-3 Grouping of Numerals

If more than four digits are required, they should be grouped and the groupings separated as appropriate by commas, by a decimal point, or by additional space.[0700]

1.6.6-4 Display of Changing Values

Numerals should not follow each other faster than one per second when the user is expected to read the numerals consecutively.
Additional Information: Drum displays should change by snap action rather than through continuous movement and should move upward with increasing values. The window through which numerals appear should be sized to allow no more than one digit per drum to appear in the window at any one time.[0700, 3659]

SECTION 2: USER-INTERFACE INTERACTION AND MANAGEMENT

2 USER-INTERFACE INTERACTION AND MANAGEMENT

User-interface interaction and management refers to the means by which personnel provide inputs to an interface, receive information from it, and manage the tasks associated with access and control of information. User-interface interaction and management comprise a wide range of tasks operators undertake when accessing information and controls needed to operate the plant. Because the design characteristics of the HSI determine the specific nature of these tasks, there is no simple link between them and design characteristics. Just as a single interface management task may be performed via many different user interfaces, a single user interface may be used to perform many types of interface management tasks.

The demands of user-interface interaction and management demands often result from the particular design aspects of the HSI. For example, consider two control rooms that have identical information systems. One control room has eight VDUs on which information can be displayed, while the other has only four. The latter will likely have a higher information management workload because operators will have to more frequently replace one display with another due to its more limited display area. Thus, interface management is a 'cut across' issue for all aspects of the HSI.

The HSI characteristics that support user interface interaction management are described below.

GENERAL DESIGN REVIEW CONSIDERATIONS

Guidelines reviewing general user input aspects of interfaces are provided in Section 2.1. This section contains guidelines for the review of the general characteristics and functions of the HSI supporting user-interface interaction and management. It covers the selection of appropriate user input formats, such as direct manipulation and menus. It also contains guidelines on basic principles to limit the need for user input and on the performance of interface management tasks.

USER INPUT FORMATS

User input format refers to the type of dialogue through which the user and the system interact. A variety of input formats can be used for user-interface interaction and management tasks.

Command Language Interfaces

Commands are instructions, entered by users via a keyboard or similar keyed device, that request the computer system to perform specific operations. In a command language dialogue, the user interacts with the computer by entering commands, possibly with minimal prompting from the system. An important aspect of command language interfaces is that users usually must retrieve appropriate commands from memory.

Commands used for user-interface interaction and management may be categorized as action and destination commands. Action commands include instructions for specific computer operations such as manipulating information pertaining to interface management and navigating display systems. Some action commands for navigation include Previous/Next Display and Zoom In/Zoom Out; they allow users to move through an information structure in steps. Destination commands include codes for identifying and retrieving specific displays; they allow users to move directly from one location in the display network to another without accessing intervening locations (similar to navigation paths in hypertext systems). The number of destination commands may be high for a display system that contains a large number of selectable display pages. Guidelines reviewing command language interfaces are provided in Section 2.2.1.

Menus

A menu is a displayed listing of possible options from which a user can choose. Menu interfaces are widely used in many computer-based systems. Because they present the user with a set of options, the user needs to recognize rather than recall the correct one. A wide variety of menu systems exist. Some important characteristics include: type of options, menu structure, presentation format, menu panel design, and interaction method. Guidelines reviewing menu interfaces are provided in Section 2.2.2.

Types of Menus. Some display systems feature full-page menus, which appear as entire display pages that replace the currently displayed page. The pop-up window appears as a window that overlays the currently presented display page. The pull-down window offers additional options to the user. For example, some display systems have a menu bar that extends across one or more borders of the display screen and contains multiple options for selection. When one of these options is selected, a list of additional options appears on the screen. The expanding or pop-out menu is a variation of the pull-down menu in which further lower-level options appear after intermediate-level options are selected. For example, when the cursor is positioned over one of the options of the pop-up menu, an additional list of options appears. Individual options of the pop-out menu may have additional pop-out menus.

Menu Option Structure. Two important aspects of the menu structure are breadth and depth. Menu breadth refers to the number of options on a particular panel. Depth refers to the number of levels in the structure. When designing menu structures, breadth and depth can be traded off. As an extreme example, a very shallow structure would include all options on a single level (i.e., all options can be accessed from a single menu panel). At the other extreme, a very deep menu structure would assign each option to a different level (i.e., each option would lead to only one other option).

Menu Option Organization. Options may be organized on a menu panel in a variety of ways, including:

- Categorical – grouped in conceptual relationships between the options.
- Alphabetical – listed in the alphabetical order of the option names.
- Frequency – listed in terms of how often each option is used.
- Sequential – listed in the order in which options are used.
- Mixed – grouped using more than one scheme. For example, the beginning of the menu may contain options that are used very frequently, while the rest of the menu options are arranged alphabetically. (This is not necessarily an acceptable arrangement, but it may exist in a menu structure that is under review.)

Menus may contain a combination of text and graphic forms. For example, an icon may be followed by the option name presented in text form. Menus often identify a subset of options that are relevant to the current situation.

Interaction Method. Menu selections are typically made by pointing with a cursor, by entering text (e.g., an associated option code), or by pressing a function key. A menu may have default mechanisms to aid selection.

Function Keys

Function keys are individual keys on a keyboard or pad that are dedicated to particular predefined operations, such as to call up a predefined display. When a function key is pressed, an instruction is sent to the computer system to perform that operation. An important consideration for function-key dialogues is the relationship between the keying operation and the functions executed. Single keying requires pressing an individual key. Double keying requires multiple keys to be pressed at once, such as when a

function key must be pressed in combination with SHIFT, ALT, or CONTROL key. In addition, a function-key dialogue may have multiple modes, and, in each mode, a particular function key may perform a different operation. Guidelines reviewing menu interfaces are provided in Section 2.2.3.

Macros/Programmable Function Keys

A macro-command consists of a series of commands that have been grouped and redefined as a single command. When the function key assigned to a particular macro-command is pressed, the series of commands is executed. A programmable function key is a key to which the user can assign functions; it can be assigned to a single function or a macro-command. Macro-commands and programmable function keys are special cases of the function-key dialogue. Their use enables a user to automate aspects of the interface management task. Guidelines reviewing interfaces employing macros and programmable function keys are provided in Section 2.2.4.

Forms

A form is a display containing category labels and blank spaces where users enter data. In a form-filling dialogue, the user enters commands or information into the data fields. Forms facilitate the interface management task by reducing the need for the operator to memorize the types of information needed and the permissible entries for each. Command-entry forms are used to aid the user in composing commands. Information-entry forms are used for tasks requiring the user to specify information. Forms may have error checking features, which check entries to determine if they are in the permissible range. Forms may have default information already be entered into data fields to facilitate their use. Guidelines for reviewing interfaces based on forms are provided in Section 2.2.5.

Direct Manipulation Interfaces

Direct manipulation interfaces allow users to act on visible objects to accomplish tasks, e.g., opening a display by clicking on its icon. A variety of icons may be used to manipulate plant displays. Icons shown on mimic displays represent specific plant components, systems, or functions. Clicking on them may provide access to information about these components and systems, or display an interface for their operation. Displays may contain a variety of computer-based interfaces, such as buttons and sliders, for performing interface management tasks. For example, interfaces for manipulating the presentation of display windows on display screens often contain buttons, sliders, and 'grab and drag' points; these are used for opening/closing, resizing, and moving windows and scrolling and paging the window's contents.

Input is usually provided by using a pointing device to manipulate the graphical object, causing the computer operations to be performed on the object or information it represents. Feedback is represented by a change in the graphic object. For example, when deleting a file, the document icon may disappear into a trash can icon. Guidelines for reviewing direct manipulation interfaces are provided in Section 2.2.6.

Natural Language Dialogues

In natural language dialogues, users compose entries using a restricted subset of their natural language. The intent is to take advantage of the highly developed skills that people already have in using their own language, and to avoid the need for users to learn artificial dialogues for communicating with computer. Guidelines for reviewing natural language interfaces are provided in Section 2.2.7.

Query Language Dialogues

A query language is a special-purpose language designed to allow the user to direct questions to the computer, usually to interrogate a database. Query languages are artificial in the sense that they contain

terms and grammar that are specifically developed for interacting with the computer. Most queries are entered as text strings via keyboards and are often constructed using keywords (e.g., Select, From, and Where). Then a mapping function uses the keywords to examine the database and find all cases that satisfy the query's criteria. A query language may be limited in size to facilitate learning, but they are generally for experienced users. Guidelines for reviewing query language interfaces are provided in Section 2.2.8.

Question and Answer Dialogues

Question and answer is a type of dialogue in which a computer presents one question at a time for a user to answer. While many computer dialogues pose questions in some form, to which the user must reply, the question and answer dialogue is distinguished by its explicit structure. At each step of the human-computer interaction, the system issues a single explicit question as a prompt, to which the user responds with a single answer. Answers are usually alphanumeric text strings entered via a keyboard. They may be terms from predefined dialogues (e.g., Yes/No, Increase/Decrease) from a limited grammar, or an arbitrary data item (e.g., a numerical value for a control setpoint). Question and answer systems may allow abbreviations in responses to reduce the number of keystrokes needed. Based upon the answer received, the system may determine which question to ask next. If the user enters an inappropriate answer, the system may issue an error message and then present the question again. This process may be repeated until the user gives an acceptable response. Guidelines for reviewing question-and-answer interfaces are provided in Section 2.2.9.

Speech

A speech interface permits the user to provide spoken input, which a computer interprets as data or commands. Speech commands are interpreted by speech recognition systems, which can be either speaker dependent or independent. The latter have the advantage of allowing anyone to enter a command. The tradeoff is that they are less reliable, meaning that the percentage of utterances misunderstood or not recognized is higher. Speaker-dependent systems require individual operators to train the system on the unique characteristics of their voices; these systems are more reliable. Speech recognition systems can also perform more reliably if a limited vocabulary is used. Guidelines for reviewing speech-based interfaces are provided in Section 2.2.10.

One limitation is that CRs are already verbally noisy environments and the operators' communication workload can be high. A potentially positive feature is that in computer-based CRs, the operator's hands are very busy with keyboards and other input devices.

CURSORS

A cursor is an on-screen graphic element that is driven by the user (using a mouse, trackball, or other control device) to move and manipulate on-screen objects. Aspects of cursors that affect their use include:

Appearance

This includes the cursor's form (e.g., arrow or bar), salience characteristics (e.g., blinking), and positioning on the display screen.

Controls

These are devices used for positioning the cursor (e.g., mouse or arrow keys) and their characteristics.

Movement

These are characteristics describing the movement and positioning capabilities of the cursor (e.g., responsiveness, pointing precision, cursor behavior at data entry fields, response adjustable features).

Multiple Cursors

A computer-based system may feature multiple cursors, such as when multiple personnel interact with a single, group-view display. Important characteristics include the appearance of the cursor (e.g., coding to aid discrimination of multiple cursors), identification of cursor states (e.g., active state), controlling multiple cursors from a single device, and compatibility among multiple cursor control devices.

Pointing Cursors

Pointing cursors are the arrows (or other symbols) that move across a display in response to movement of the pointing device. They are used to indicate functions, objects, or locations that the user wishes to select or act on.

Text Entry Cursors

Text entry cursors indicate the point at which typed or copied characters will be inserted. They typically appear as a blinking vertical line or underscore character.

Multiple Display Devices

In some systems, users may interact with multiple display devices by means of a single pointing device. It is important that the user is able to track the movement of the pointing cursor from one device to another.

Guidelines for reviewing cursors are provided in Section 2.3; each of the above aspects of cursors is covered in a separate subsection.

SYSTEM RESPONSE

System response refers to the computer system's behavior after receiving inputs from the user. Important characteristics include:

Prompts

These are cues the computer system gives the user that suggest the type of response that the user should provide. Prompts can support users in selecting the proper operation for an interface management task.

Feedback

This refers to the behavior of the computer system when the user enters data, which indicates whether the data is being received. Feedback can help users determine whether the computer has accepted an input and whether it is having the desired result.

System Response Time

This refers to the time between the submission of an input to a computer system and the return of results. Important characteristics include the amount of time and the variability between individual responses. The response time may be characterized according to the type of input to which the computer system responds (e.g., control activation, system activation, user requests, error feedback). System response time is important because long delays can detract from primary task performance, especially when the user must remember information while the system is responding.

Guidelines on system response are in Section 2.4; each of the above characteristics of system response is covered in a separate subsection.

DISPLAY MANAGEMENT

Display Selection and Navigation

Display navigation refers to the operation of searching for information, such as finding a desired display in a display network or finding an item of information within a large display. Display selection refers to the operation of retrieving a desired display or item of information. Guidelines for design features related to selection and navigation are given in Section 2.5.1. Subsections address important aspects (orientation features, retrieval features, and navigation features for large displays); each of these is described below.

Orientation Features

Orientation features help the user understand the relationship between currently accessed information and the rest of the information structure. These features are important because users of large information systems can have a sense of feeling lost in the information space. Orientation features minimize this problem; they may be present in both the display network and in the individual display pages. For example, the display network may contain features showing which display page is currently selected. Display pages that exceed the size of display windows may contain features identifying which portions are currently within view and out of view. A variety of features that support orientation are described below. These include overview displays, spatial references, contextual cues, text-based descriptions, and titles and identification codes.

Perhaps the simplest means of supporting the user's orientation is to include titles or other identifying information that indicates the position of a display in a larger information space. For example, if a group of display pages is functionally related, their titles may be designed to reflect this relationship. Some process control display systems assign a unique numerical or alphanumerical code to each display page. The coding scheme may include prefixes and suffixes to indicate relationships between displays. The prefix identifies the major branch of the menu system (e.g., a major plant system), while the suffix indicates the level in the branch. For example, if a four-digit numerical coding scheme is used, the first digit might indicate major branches (e.g., 1000, 2000, 3000), and the second digit the next lower level of branch (i.e., the second level of branches within the 2000 branch would be 2100, 2200, 2300); this pattern would continue for the remaining digits of the coding scheme.

Overview displays (sometimes called 'long-shot views' or system 'maps') support the user in understanding the overall organization of information, visualizing portions of the organization that are not currently in view, and understanding the relationships between current and target positions relative to each other and the overall organization. For example, such a display might depict the arrangement of a display network and important display pages within the network. Overview displays, as used in this context, should not be confused with displays that summarize important plant status information.

Some important characteristics of overview displays are described below:

- Format – overview displays may be presented in many formats, such as a separate page, a window within a display screen, and as stand-alone reference material.
- Parallel presentation – display systems may vary in the availability of the overview display. The display may be retrievable upon demand or continuously presented.
- Indication of current location – overview displays may indicate of the user's current location within the information structure.

- Amount of information structure shown and degree of resolution – overview displays may show the entire structure of the display network or page, or portions of it. The amount of the structure presented and the size of the presentation will affect the users' ability to resolve details. Viewing techniques such as pan and zoom allow selected portions of a display to be viewed. Window resizing may be used to adjust the size of the presentation.

Spatial references are visual features that convey information about the relationship of currently viewed information to the rest of the information structure. When the entire structure cannot be viewed at once, spatial references may help the user identify the current location and to understand where adjacent items may be found. Some techniques include:

- Scales, axes, and grids – Scales, axes, and grids are sometimes used to provide spatial references for graphically displays. Axes are the graphical representation of orthogonal dimensions in the form of lines (e.g., horizontal and vertical axes). A scale is a graduated series of demarcations indicating the divisions of an axis. A grid is a network of uniformly spaced horizontal and vertical lines for locating points by means of coordinates. Grids may be applied to large displays to divide them into discrete sections, such as those used in geographical maps. If the grid uses a sequential coordinate system such as numbers or letters, then the user may use the coordinates of the current position to determine how much of the display structure lies in each direction around it. Grids are especially compatible with spatially organized information such as maps and mimic displays.
- Perceptual landmarks – These are easily discernable display features that can support the user's understanding of the arrangement of information within a display. Once a landmark is recognized, patterns are quickly activated to guide subsequent searches in its vicinity. When they appear in successive displays, landmarks can provide a frame of reference for establishing relationships between the displays. In graphical displays, major pieces of equipment, such as the reactor vessel or turbine, may serve as landmarks. Labels and headings provide important landmarks for aiding navigation in displays of tabular data or text (e.g., computer-based procedures).
- Display overlap – A single display that is too large to be shown as a single view on a display device may be divided into sections in which some portions repeat (overlap) across successive views. These repeated features establish across-display relationships (e.g., interfacing piping systems may be depicted on another display) and may call attention to other display frames (e.g., the edge of one display may identify the beginning of an adjacent display containing related information). The overlap may present physical or functional relationships between successive views.

Orientation coding, such as different background colors and patterns, may be applied to some display pages to differentiate them from displays in other parts of the display network. These cues may be used to overcome the homogeneity of displays and convey a sense of location.

Retrieval Features

Retrieval features are features of the user interface that support the user in retrieving items from the display system. These features address questions such as, "How did I get here?" and "Where can I go, and how do I get there?" They also relate to aspects of the navigation task, specifically, selecting a navigation path and executing it. Both the display network and the individual display pages contain retrieval features. The features described in this section are applicable to selecting individual display pages from a display network. In addition, many of these features also pertain to large display pages. Many may be used by operators to bring into view areas of display pages that are too large to be viewed all at once on a single screen.

Navigation Features for Large Displays

Display pages are sometimes too large to be viewed all at once from a single display screen with a level of resolution adequate for users' tasks. For example, if the display page were reduced in size to fit the available space of the display device, the text and other visual details would be too small for the user to read. In NPPs, large displays with graphical information may include mimic displays (e.g., representations of plant systems), flowcharts (e.g., representations of procedure steps), overviews of the display network, and maps (e.g., a representation of the physical arrangement of equipment in the containment building). Large displays with non-graphical data may include text displays, such as tables of data with many columns and rows. These displays can be navigated by the following means:

- Scrolling – Scrolling is a display framing technique that allows the user to view a display as moving behind a fixed frame. The scrolling action typically causes the data displayed at one end of the screen to move across it, toward the opposite end. When the data reach the opposite edge to the screen they are removed (i.e., scroll off of the screen). Thus, old data are removed from one end while new data are added at the other. This creates the impression of the display page being on an unwinding scroll, with only a limited portion being visible at any time from the screen; i.e., the display screen is perceived as being stationary while the displayed material moves (scrolls) behind it. Displays may be scrolled in the top-bottom direction, the left-right direction, or both.
- Paging – Paging is a display framing technique that allows the user to view a display as a set of display-size pages that are accessed in discrete steps. Thus, rather than being presented as a scroll, the display page is presented as a set of discrete pages. These pages are often accessed sequentially.
- Hierarchical Paging – With this approach, the large display page is divided into a set of smaller pages organized in a hierarchy. The pages vary in the amount of material included from the large display page and the degree of magnification. As the user moves down the hierarchy, more detailed information is accessed from smaller areas of the large display page.
- Panning – Panning is based on a camera analogy; it is similar to moving a camera across a scene. Panning is movement in the left to right dimension across a display screen or from top to bottom; the latter movement is sometimes referred to as "tilt". The distinction from scrolling is one of perspective; panning is the opposite of scrolling. When panning, the viewer perceives the displayed material as being stationary while the viewing area of the display screen moves across it.
- Zooming – Zooming is also based on a camera analogy; the action is analogous to changing the focal length of a camera lens. Zooming-in is similar to moving closer to an object while zooming-out is similar to moving further away from it. Because the size of the display screen is fixed, the effect of zooming-in is to show a smaller area of the display page at a higher magnification; the effect of zooming-out is to show a larger area at lower magnification. Panning capabilities are often provided in conjunction with zooming capabilities.
- Distortion-Oriented Techniques – These techniques allow a user to view details of an area of a large display page while keeping the rest of the page in view. This is accomplished by presenting the focus area at a higher magnification than the rest of the display page. The result is a distorted view of the large display page because different parts of it give the user contextual information. Key features of the unmagnified global structure inform the user of the existence and location of other parts of the information structure and support the interpretation of local details.

Windows

A window is a dedicated geometric area on a display screen within which the system presents information or receives input from the user. Windows may be manipulated as follows to adjust the presentation of information in a display screen:

- Closing/Opening – Windows that are not in use may be closed to reduce clutter in the display screen or opened to allow the user to view and interact with the display contained in the window.
- Sizing – The size of the windows on the display screen may be increased (e.g., to make them easier to view) or decreased (e.g., to reduce clutter).
- Positioning – The windows on the screen may be positioned to improve the user's view or to locate related windows adjacent to one another.
- Layering – Layering refers to moving one window so it appears to be positioned on top of another one. The overlapping may be partial, such that the top window covers all but a portion of the other window, or total, such that it entirely covers the other window. The degree of overlap of one window relative to the others may be changed to improve the user's view of or increase the ease of interaction with its contents.
- Tiling – Tiling refers to a configuration in which windows are positioned beside one another like floor tiles. Windows may be arranged in a tiled format so that they can be viewed without overlaps, and related windows are adjacent to each other.

The degree of automation of window management tasks may vary. For some systems, all window management tasks are performed manually; in others, they are performed automatically by the information system. Still other window management systems present windows automatically but allow the operator to make manual adjustments. For example, when an information system opens a window (e.g., in response to a change in the plant or information system or the operator's input), it automatically determines the size and position of the window on the display screen. The operator may then close, move, or resize the window.

Guidelines relating to the design of windows are in Section 2.5.2.

Display Control

Display controls allow users to select the information that is presented and the format in which it is displayed. Guidelines for this topic are given in Section 2.5.3.

Display Update/Freeze Features

The update capability of a display system refreshes the data in a display with current values. A display freeze capability prevents a data display from being refreshed with current data values. The freeze capability may be used to provide a view of the status for a specified time or to allow the user to read a rapidly changing display. Display update capabilities are typically initiated automatically; in some cases, the user may be able to adjust the rate of updating. Display freeze capabilities may be initiated automatically or manually. Important characteristics of these capabilities include the degree of user control, the rate of automatic updates, and the designation of the freeze state. Guidelines for this topic are given in Section 2.5.4.

Display Suppression Features

Display suppression features temporarily remove information that is less important, irrelevant, or otherwise unnecessary, and then redisplay it when needed. The intent is to reduce visual clutter. Important characteristics include the user's degree control over the display suppression capabilities, dedicated keys for this capability, and the designation of the suppressed state. Guidelines for this topic are given in Section 2.5.5.

Scrolling and Paging

When the area needed to display information exceeds the space provided by the display device or window, users are able to bring selected portions into view by scrolling or paging. Guidelines for this topic are given in Section 2.5.6.

Automated Actions

Guidelines for reviewing features that automatically perform window management functions are given in Section 2.5.7.

INFORMATION MANAGEMENT

Computer-based display systems may have capabilities that allow the users to create, change, store, and retrieve documents via the computer. Their important characteristics include the following:

- Creating and Editing Documents – These include features that support the user in creating and changing documents, such as hyphenation, tabs, margins, line breaks, pagination, manipulation of figures and other graphical objects, cutting and pasting, and manipulation of fonts (e.g., font type, underlining, bold).
- Saving Documents – These include features that allow the user to exit a document and save the changes made when editing it.
- Temporary Editing Buffer – These include features that allow the computer to temporarily store information while the user edits a document.
- Excerpt File – This file allows the user to move data from one location to another. It differs from a temporary editing buffer in that the excerpt file can be saved.

USER ASSISTANCE

Systems typically include various features intended to assist the user. Guidance/help may be provided online and in hardcopy. Computer-based guidance/help may be presented automatically (e.g., after an incorrect entry has been detected) or at the user's request.

Online help may be provided in a variety of computer-based formats ranging from online manuals to brief messages. In some systems, the guidance information appears in a display page that completely replaces the existing task display. Window-based systems can present guidance information within the same display screen as the task display, allowing the task and the guidance to be viewed simultaneously. The presentation of this guidance may be initiated by the user or the system. The user may actively access guidance (e.g., by entering a help command or opening an online guidance document). The guidance system may retrieve a help document, issue a message, or prompt the user to take a particular action.

General guidelines for reviewing user assistance features are given in Section 2.7.1. Guidelines for the following specific types of user assistance are given in later subsections of Section 2.7:

Advisory Messages

These are messages from the computer system indicating conditions that may require the user's attention.

Error Messages

These are messages from the computer system to the user indicating that an error or potential error has been made.

User Input Validation

These are capabilities that check the user's inputs, according to defined software logic, and indicate that it is acceptable to the computer system. For example, a validating capability may inform the user that a command or query is improperly formatted.

Entry Confirmation

These are features that require users to carry out additional operations to confirm their intent of a particular entry. The system may prompt the user when an entry may have a destructive effect, such as exiting a mode, deleting or changing a file, or shutting down equipment.

Data Protection

These are automatic capabilities for minimizing the loss of data that may occur as the result of a computer failure or the user's actions. They remind personnel to take necessary action to protect data. Capabilities for protecting against computer failures include periodic automatic archiving of data files, maintenance of transaction logs for reconstructing recent data changes, offsite storage of copies of important software, and the provision of backup computing facilities. Capabilities for protecting against user errors include protection from interrupts and data changes, and safe defaults.

Correction of Information and Command Entries

These are capabilities that, after checking data or command inputs entered by the user, either automatically put them in the correct form or supply corrections that the user can either accept or reject.

INTERFACE FLEXIBILITY

Flexibility is built into most interfaces to enable users to tailor their HSIs to meet current task demands and to adjust them to their personal preferences. Guidelines for reviewing the implementation of interface flexibility are given in Section 2.8.

SYSTEM SECURITY

A computer-based system may contain the following features that restrict personnel access to aspects of the computer system to prevent accidental or deliberate damage:

- User Identification – These are capabilities for establishing the identities of authorized users. Important characteristics include password protection, tests to authenticate user identity, and notifications of potential threats to data security, such as from unauthorized personnel.
- Information Access – These are capabilities that reduce the likelihood of files being accessed and changed. Examples include encryption of sensitive data, indication of the data's security classification, administrative controls regarding access to printed data, automatic records of data access, and the use of read-only files.

Guidelines for reviewing system security features are given in Section 2.9.

In the course of developing the guidance for user-interface interaction and management, several considerations were identified that are important to crew performance and safety, but for which the technical basis was insufficient to develop specific HFE guidelines. These aspects of interface design should be addressed on a case-by-case basis using the design process considerations presented in Appendix B2.

2 USER-INTERFACE INTERACTION AND MANAGEMENT

2.1 General User Input Guidelines

2.1-1 Selection of Dialogue Types

The selection of dialogue types should be based on anticipated task requirements, user skills, and anticipated system response time.
Additional Information: Dialogue types are related to task requirements in Table 2.1.[5908]

2.1-2 Consistent Procedures

Procedures for entering commands or information should be consistent in form and consequences.
Additional Information: Menu selection techniques, user input procedures, editing and error correction procedures are examples of user actions for which conventions are required. Consistent procedures will help users develop consistent habits of operation, can reduce the likelihood of user confusion and error, and are especially important for any transaction that risks data loss.[5908]

2.1-3 Consistent Wording of Commands

All terms employed in the user-system interface, and their abbreviations, should be consistent in meaning from one transaction to another, and from one task to another.
Additional Information: The same kind of action should be referred to by the same word in any context. For example, EDIT should not be used in one place, MODIFY in another, UPDATE in a third, all referring to the same kind of action. Commands should be congruent with one another, following natural language patterns; if one command is UP, its complement should be DOWN. Other natural complements include OPEN-CLOSE, RUN-STOP, ON-OFF, IN-OUT, and RAISE-LOWER. For instructional material, such as display labeling, on-line guidance, and other messages to users, consistent terminology should be used to refer to entry of commands or information.[5908]

2.1-4 Wording Consistent with User Guidance

The wording and required format of information or command entry functions should be consistently reflected in the wording of user guidance, including all operating procedures, labels, messages, and training material.
Additional Information: For example, when the computer displays a file name, that name should be shown in a format that would be acceptable if the name were included in a command entry. For example, if a user must complete a control form to specify printer settings, the words used as labels on that form should also be used in any error messages and HELP displays which may guide that process.[5908]

2.1-5 Minimal Demands on the User

Entry of information or commands should not require the user to remember special codes or sequences or to perform translations or conversions.
Additional Information: Command names should specifically describe the functions being implemented and should reflect the vocabulary and syntax of user's operational language. The user should not have to transform units at time of data entry. For example, user entries should be in the same units that are used in control room displays and procedures; the user should not be required to convert from gallons per minute to gallons per hour.[5908, 0700]

2.1-6 Minimal User Actions

User input actions should be simple, particularly for real-time tasks requiring fast user response.

Table 2.1 Dialogue formats for representative user tasks

Task	Command Language	Menus	Function Keys	Macros and Progr. Keys	Forms	Direct Manipulation	Natural/Query Language	Question/ Answer	Speech
Arbitrary entry sequences	X					X			
Reduce hands-on control									X
Unpredictable retrieval							X		X
Wide range of control entries	X								
Frequent control/ transactions			X	X					
Small command set		X	X						
Complex control				X	X	X			
Large command set		X		X					
Routine data entry								X	
Entry order constrained								X	
Data entry flexibility needed					X				
Little arbitrary data input		X				X			
Slow computer response time					X				
Fast computer response time		X				X		X	
Highly trained users	X								
Moderately trained users				X	X		X		
Little training		X				X		X	X

Additional Information: The user interface should permit completion of a task with the minimum number of actions. For example, a user should be able to print a display by simple request, without having to take a series of other actions first, such as calling for the display to be filed, specifying a file name, then calling for a print of that named file. For long, multipage displays, it should be possible to request a particular page directly, without having to take repetitive NEXT PAGE or PREV PAGE actions. This guidance does not apply to potentially destructive functions; extra user actions required to invoke such functions serve to make them less likely to be inadvertently activated.[5908]

2.1-7 Unnecessary Entry of Information
A user should not be required to re-enter information already available to the system.
Additional Information: A user should need to enter any particular information only once, and the computer should access that information if needed thereafter for the same task or for different tasks. Requiring re-entry of data requires unnecessary effort on the part of users and increases the possibility of entry errors. The computer should automatically access or compute information that can be derived from existing computer records.[5908]

2.1-8 Availability of Information
Information necessary to accomplish a specific entry (e.g., labels, annotations, prompts, or options lists) should be available to the user when that transaction action is appropriate.
Additional Information: Required annotation will vary with the application. Some annotation may be so commonly needed that it should be continuously displayed, e.g., document name, page number, and indication of control mode (if any). Other annotation might be displayed only at user request, such as document status (date last changed or last printed), which might be displayed in an optional window overlay, and format control characters, which might be visible in an optional display mode. For example, the user might wish to see format control characters, such as tab and margin settings.[5908]

2.1-9 Logical Transaction Sequences
An information entry sequence should be designed so that its organization reflects the user's view of the task, and should provide all control options that may be required.
Additional Information: A logical unit to the user is not necessarily the same as a logical unit of the computer software that mediates the transaction sequence. It might be, for example, that a user should enter ten items of data in a single transaction, because those data all come from one particular paper form, even though the computer will use five of those items for one purpose and five items for another in its subsequent internal processing.[5908]

2.1-10 Flexible User Entry
Flexible means of entering information or commands should be provided so that users can accomplish necessary transactions, and can obtain guidance as needed in connection with any transaction.
Additional Information: The user should be able to go forward or back at will when scanning a multipage display. A user interface design that permits only forward steps is deficient in that the user must cycle through an entire display series to reach a previous page.[5908]

2.1-11 Control by Explicit User Action
Users should be allowed to control the processing of information or commands by explicit action.

Additional Information: The processing of an entry or the cancellation of an ongoing process should not occur as a side effect of some other action. For example, when a user is keying an extended data entry, the computer should not interrupt the user to require immediate correction of any entry error, but instead should wait for the user's ENTER action. Also, when a user is composing a command to accomplish some transaction, the computer should not interrupt the user by responding as soon as it recognizes a partial entry, but instead should wait for the user's ENTER action. In automated process control applications, emergency conditions may take precedence over current user transactions, and a computer-generated warning might interrupt user actions. In routine, repetitive data entry transactions, successful completion of one entry may lead automatically to initiation of the next. Computer detection of problems with current user entries can usually be negotiated at the conclusion of a transaction, before it is implemented. Nondisruptive alarms or advisory messages can be displayed to report computer monitoring of external events so that the user can choose when to deal with them.[5908]

2.1-12 Compatibility with User Expectations

The results of any entry should be compatible with user expectations, so that the system changes in a 'natural' way in response to user actions.

Additional Information: The result of an entry should be consistent with the user's view of the system. For example, a control entry of NEXT PAGE should show the next frame of a current display, and should not jump off to some other internally defined 'page' in the computer's database. When the completion of a control entry is indicated by a special function key, that key should be labeled ENTER (or some functionally equivalent word) and should result in computer acknowledgment of the entry.[5908]

2.1-13 Feedback for User Entries

The computer should acknowledge every entry immediately.

Additional Information: For every entry action by the user, there should be some obvious reaction from the computer. The absence of computer response is not an acceptable means of indicating that an entry is being processed. 'Immediately' as used in this guideline must be interpreted in relation to the response time requirements of different dialogue types. For example, execution of a requested transaction might produce an immediately apparent result, as when a user requests NEXT PAGE and the next page is displayed. A message might indicate completion of a transaction, as when a user requests a printout at a remote facility and the computer displays a confirming message "RAD WASTE file has been sent to printer;" or, a message might indicate that execution is in progress or deferred, as when a user enters data and the computer displays an interim message "RAD WASTE file is being updated." A message might indicate that the control entry requires correction or confirmation, as when a user requests a file display and the computer displays an error message "RAD WASTE file not recognized." In a menu selection context, it may suffice simply to highlight the selected option label (e.g., by brightening or inverse video) when that would provide an unambiguous acknowledgment.[5908]

2.1-14 Periodic Feedback

When system functioning requires the user to stand-by, periodic feedback should be provided to indicate normal system operation.

Additional Information: In addition to the indication that the system has received the menu-based command, feedback about completion of the command should also be communicated. Completion of the action commanded by the menu item will be sufficient feedback, provided that the action has a result that is visible to the user. However, if the completion of the menu item has no visible result, the additional feedback that the command was completed should be communicated by a message in the Message Area.[5908]

2.1-15 Indicating Completion of Processing

When processing in response to an entry is lengthy, the user should be given some positive indication of subsequent completion.

Additional Information: Completion of the action commanded by the menu item will be sufficient feedback, provided that the action has a result that is visible to the user. However, if the completion of the menu item has no visible result, the additional feedback that the command was completed should be communicated by a message. If a user is currently involved in some new transaction, then completion of processing for a prior transaction should be indicated by nondisruptive display of an appropriate advisory message. If the outcome of a completed transaction implies the need for further user action, that should be indicated to the user.[5908]

2.1-16 Indicating Control Lockout

If entries must be delayed pending computer processing of prior entries, the delay should be indicated to the user.

Additional Information: If processing delay results in control lockout, this could be signaled by a change in the appearance of the cursor, accompanied by an auditory signal. In some applications, it may be desirable to ensure that the keyboard and other control devices are automatically locked until the user can begin a new transaction. This would be true when processing the current transaction will affect the results of subsequent user actions. In other applications, it may be possible to permit users to continue work while previous transactions are still being processed. Deletion or change of a displayed cursor in itself may not be a sufficient indicator of keyboard lockout. Auditory signals will be particularly helpful to a user who may not look at the display when making entries. Following control lockout, computer readiness to accept further entries should be indicated to the user.[5908]

2.1-17 Interrupt to End Control Lockout

In situations where control lockout does occur, an auxiliary means of control entry should be provided, such as a special function key, to abort a transaction causing extended lockout.

Additional Information: Such an interrupt capability will be especially helpful if a user recognizes that an error has been made and wants to stop an unneeded transaction, acting like an UNDO command.[5908]

2.1-18 Entry via Principal Display

When data entry is a significant part of a user's task, entered data should appear on the user's main display.

Additional Information: When the main display is basically formatted for other purposes, such as a graphic display for process control, a separate window or area on the display may have to be reserved for data entry.[5908]

2.1-19 Entry of Corrections

The same explicit ENTER action should be required for entry of corrections as used for the original entry.[5908]

2.1-20 Editing Capabilities During Text Entry

Users should be able to perform simple editing during text entry without having to invoke a separate edit mode.

Additional Information: While entering text, users should have some capability for text selection (by cursor movement) and deletion (e.g., by use of destructive backspace). The intent of this guideline is not to endorse modeless over moded text editors. In fact, when experienced users perform editing tasks, a moded editor may offer some advantages. However, if a moded editor is provided, users should be able to do some simple editing, such as correcting typographical errors and making simple word changes without having to invoke that editor. When users will compose text on-line, consider providing a modeless editor rather than a moded editor. Modeless editors offer some advantages for text composition, when users will frequently alternate between text entry and editing.[5908]

2.1-21 Entries Distinct from Text
If entries are made by keying onto the display, such as by keyed menu selections or commands, they should be distinguishable from displayed text.
Additional Information: The user should not be able to enter controls as text, or vice versa. Errors can be avoided by having keyed entries made only in a reserved window in the display, or by using function keys rather than text entry.[5908]

2.1-22 Variable Length Data Area
Users should not have to remove unused underscores or otherwise enter keystrokes for each position within a variable length entry area.[5908]

2.1-23 Optional Versus Required Entry
Optional versus required data entries within fields on input forms should be distinct.[5908]

2.1-24 Display of User Annotations
Annotations added by users to displayed text should be distinguishable from the text itself.
Additional Information: This recommendation refers to additions such as marginal notes on printed displays. Other annotation such as format control characters might be shown in a special display mode where text has been expanded to permit annotation between lines. For example, continuous annotation might be displayed in the top and/or bottom lines of a page, separated from the text by blank lines; optional annotation might be displayed in window overlays.[5908]

2.1-25 Flexible Interaction Design
When information or command entry requirements may change, some means for the user (or a system administrator) to make necessary changes to available functions should be provided.
Additional Information: Entry functions that may need to be changed include the types of dialogue that are provided, procedures for transaction selection and interrupt, methods for context definition and error management, and alarm control.[5908]

2.1-26 Guidance Information
Users should be able to request guidance information regarding requirements for information of command entry (e.g., syntax, parameters, and options).[5908]

2.1-27 Entry Procedures Matched to User Skill
The means of entering information or commands should be compatible with user skills, permitting simple step-by-step actions by beginners, but permitting more complex entries by experienced users.

Additional Information: Most systems will have users with varying levels of experience. Any particular user may become more expert with increasing experience, or perhaps less expert after a long period of disuse. Accommodating users of varying expertise requires a mixture of different dialogue types, with some means for smooth transition from one mode of dialogue to another. For instance, as users come to learn menu codes, they might be allowed to enter those codes without necessarily displaying a menu, i.e., those codes might also serve as commands.[5908]

2.1-28 Stacked Entries
Users should be allowed to key a sequence of commands or option codes as a single 'stacked' entry.
Additional Information: In particular, users should be allowed to enter stacked entries from any menu so that an experienced user can make any specific entry without having to view subsequent menus. Entry stacking may be helpful when a user is being prompted to enter a series of parameter values, and knows what several succeeding prompts will request and what values to enter. Entry stacking will permit a transition from simple step-by-step entry by novice users, as in menu selection and question-and-answer dialogues, to the entry of extended command-language statements by experienced users. Entry stacking is especially helpful in time-shared systems where computer response to any user entry may be slow.[5908]

2.1-29 Consistent Order in Entry Stacking
For control entry stacking, entries should be required to be in the same order as they would normally be made in a succession of separate control entry actions.[5908]

2.1-30 Abbreviation in Entry Stacking
For control entry stacking, command names, their abbreviations, or option codes should be accepted just as if those control entries had been made separately.
Additional Information: In some applications, it might prove helpful if the computer were to display its interpretation of a stacked entry for user review and confirmation.[5908]

2.1-31 Minimal Punctuation of Stacked Entries
Users should be allowed to stack control entries without any punctuation other than spaces between words or option codes.[5908]

2.1-32 Standard Delimiter in Entry Stacking
If punctuation other than spaces is needed to separate entries in a stacked control entry, a single standard symbol should be used for that purpose.
Additional Information: A slash (/) is often used to separate stacked entries. Whatever symbol is adopted as a delimiter for control entries should preferably be the same as any delimiter that might be used when making data entries. Note that even when a standard symbol is consistently used to punctuate stacked entries, entry will be slower and less accurate than if only spaces are used for punctuation.[5908]

2.1-33 Distinctive Display of Control Information
All displays should be designed so that features relevant to user entries are distinctive in position and/or format.
Additional Information: Relevant features include displayed options, command entry areas, prompts, advisory messages, and other displayed items (such as titles and time signals) whose changes signal the results of user entries.[5908]

2.1-34 Displayed Context
If the consequences of a user entry will differ depending upon context established by a prior action, then some continuous indication of current context should be displayed for reference by the user.

Additional Information: The user should not have to query the system to determine the current mode. For example, if activating a DELETE key establishes a mode, so that subsequent selection of a PAGE key will erase a page of data rather than simply advancing to display the next page, then some indication of that established DELETE mode should be displayed to the user.[5908]

2.1-35 Consistent Display of Context Information
Information displayed to provide context for user entries should be distinctive in location and format, and consistently displayed from one transaction to the next.
Additional Information: The system should indicate current position within a sequence.[5908]

2.1-36 Record of Prior Entries
Users should be permitted to request a summary of prior entries to help determine present status, and should be allowed to review the parameters currently in effect.
Additional Information: Summarizing prior entries will be particularly helpful in tasks where the sequence of user actions is variable, where a user must know what was done in order to decide what to do next. Summarizing prior entries may not be needed for routine transactions if each step identifies its predecessors explicitly, although even in those circumstances, a user may be distracted and at least momentarily become confused. A capability for parameter review may likewise be helpful even when a user selects all parameters personally.[5908]

2.1-37 Standard Display Area for Command Entry
A command entry area in a consistent location should be provided on every display, preferably at the bottom.
Additional Information: Adjacent to the command entry area, there should be a display window reserved for prompting entries, for recapitulation of command sequences (with scrolling to permit extended review), and to mediate question-and-answer dialogue sequences (i.e., prompts and responses to prompts).[5908]

2.1-38 General List of Options
A general list of basic options should be provided and always be available to serve as a 'home base' or consistent starting point for user input.
Additional Information: Return to this starting point can be accomplished by an OPTIONS function key, or by an explicit option on every display, or by a generally available implicit option. Such a capability may be helpful even when all dialogue is user-initiated. It might be the general menu for a menu selection dialogue, or might be a standard starting point for composing command entries. However, a user should not be required to return to a display of general options in order to make an entry. If a user remembers option codes or commands, ideally those entries could be made from any point in a transaction sequence.[5908]

2.1-39 Displaying Option Codes
When users must select options by code entry, the code associated with each option should be displayed in a consistent and distinctive manner.
Additional Information: In many applications, an equal sign is used to designate option codes, such as N = Next page and P = Previous page.[5908]

2.1-40 Organization and Labeling of Listed Options
The general options list should show control entry options grouped, labeled, and ordered in terms of their logical function, frequency, and criticality of use, following the general guidelines for menu design.

Additional Information: In systems in which selection is made by use of a cursor, formats should be organized to minimize positioning movements of the cursor.[5908, 0700]

2.1-41 Indicating Appropriate Control Options
Users should be provided with a list of the control options that are specifically appropriate for any transaction.
Additional Information: Transaction-specific options might be listed in the working display if there is space for them. Otherwise, they might be displayed in an overlay window at user request. Control options that are available for almost any transaction should be treated as implicit options, which need not be included in a list of transaction-specific options, unless they are particularly appropriate to the current transaction.[5908]

2.1-42 Only Available Options Offered
Only control options that are actually available for the current transaction should be offered to users.
Additional Information: If certain options are not yet implemented, as during system development, or are not available for any other reason, those should be annotated on the display.[5908]

2.1-43 Provide Further Available Action
Transactions should never leave the user without further available action and should provide next steps or alternatives.
Additional Information: A number of basic actions (e.g., "Continue," "Abort," and "Go to Main directory") should be available to users at any point in their interaction with the system.[5908]

2.1-44 Prompting Command Entries
Users should be provided with whatever information may be needed to guide command entries at any point in a sequence of transactions, by incorporating prompts in a display and/or by providing prompts in response to requests for HELP.[5908]

2.1-45 Control by Simultaneous Users
When several users must interact with the system simultaneously, control entries by one user should not interfere with those of another.
Additional Information: This requires careful interface design for applications where joint, coordinated actions must be made by a group of users.[5908]

2.1-46 Highlighting Selected Data
When a user is performing an operation on some selected display item, that item should be highlighted.
Additional Information: This practice will help avoid error, if a user has misunderstood or perhaps forgotten which item was selected.[5908]

2.1-47 User Control of Processing
Users should be allowed to control processing of a command or request.
Additional Information: In most applications, a user should be able to interrupt or terminate processing once it has been initiated. The functions in Table 2.2 should be provided (as appropriate to task requirements).[5908]

2.1-48 Distinctive Interrupt Options
If different kinds of user interrupt are provided, each interrupt function should be designed as a separate control option with a distinct name.

Additional Information: The means of invoking interrupt functions should be clear to the user. For example, it is undesirable to have a single INTERRUPT key that has different effects depending upon whether it is pushed once or twice. Users would be confused by such an expedient, and uncertain about what action has been taken and its consequences.[5908]

2.1-49 User Transaction Interrupts
User interrupts and aborts should not modify or remove stored or entered data.[5908]

Table 2.2 Functions for the control of processing commands

Function	Result	Application Example
END	conclude a repetitive sequence of actions	in a repetitive sequence of data entries, where completing one transaction cycles automatically to begin the next, END might break the cycle and permit the user to select other transactions
PAUSE/CONTINUE	interrupt and later resume a sequence of transactions without any change to data entries for the interrupted transaction	a user might interrupt a current task to read an incoming message
SUSPEND	preserve current status when a user leaves the system, and permit resumption at that point when the user later logs back onto the system	a user might postpone completion of a task until needed data become available

2.1-50 User Control of Entry
Users should be allowed to control the pace and sequence of their entry of information or commands. *Additional Information:* The functions in Table 2.3 should be provided (as appropriate to task requirements).[5908]

2.1-51 User-Specified Transaction Timing
When appropriate to task requirements, users should be allowed to specify the timing of transactions. *Additional Information:* Users should be able to specify when a requested transaction should start or be completed, or to schedule the periodic transactions. In many applications, users will wish specified transactions be performed as quickly as possible. In some applications, however, users may have good reasons to delay initiation (or completion) of transactions. For example, a user might wish to specify that a requested data analysis routine be deferred until some later time, to ensure that interim updates to the data will be taken into account.[5908]

Table 2.3 Functions for the control of entering information

Function	Result	Application Example
CANCEL	erase any changes just made by the user and restore the current display to its previous version	correction of erroneous input prior to actually entering the information in a data file
BACK	return to the display for the last previous transaction	in a sequence of related data entries, on several display frames, return to the previous frame, where data items could then be erased or could be edited individually
REVIEW	return to the first display in a defined transaction sequence, permit the user to review a sequence of entries and make necessary changes	in a sequence of related data entries, on several display frames, return to the first frame, from which data could be reviewed and edited as needed throughout the sequence of frames
RESTART	canceling any entries that have been made in a series of entries and returning to the beginning of the sequence	in a sequence of related data entries on a form-filling display, erase all data entries and return to the first field on the form

2.1-52 Indicating PAUSE/SUSPEND Status

If PAUSE or SUSPEND options are provided, some indication of the status should be displayed whenever such an option is selected by a user.
Additional Information: If appropriate (i.e., for a paused transaction), the action that will permit resumption of the interrupted transaction should be indicated to the user.[5908]

2.1-53 Consistent CONTINUE Option

At any step in a defined transaction sequence, if there is only a single appropriate next step, then a consistent control option to continue to the next transaction should be provided.
Additional Information: CONTINUE or NEXT or STEP are all suitable names for this option. If data entry is involved, then users should be required to take an explicit ENTER action to signal data entry, rather than simply selecting CONTINUE.[5908]

2.1-54 Data Manipulation

The user should be able to manipulate information without concern for internal storage and retrieval mechanisms of the system.
Additional Information: The system should contain sufficient memory to accommodate the user's requirements.[5908]

2.1-55 Default Values

When likely default values can be defined for the information to be entered in a particular task, those default values should be offered to speed entry.
Additional Information: When defaults are defined that may vary from one transaction to another, users should be informed of the current default logic. For example, "Press ENTER to see more options." If a consistent default is adopted throughout interface design, that default need not be explicitly indicated for each individual transaction. Here the phrase "null control entry" refers to pressing an ENTER key without first keying a command or option code (and without any accompanying data). It does not refer to defaults for optional parameters that might accompany a valid control entry, whose values might be displayed only at user request. It is not necessary that any defaults be defined for null control entries. In such cases, the computer might simply respond "ENTER alone is not recognized here."[5908]

2.1-56 Display of Default Values

At the start of an input transaction, currently defined default values should be displayed in their appropriate data fields.
Additional Information: It may be helpful to mark default values in some way to distinguish them from new data entries.[5908]

2.1-57 Easy Confirmation to Enter Default Values

Users should be provided with some simple means to confirm acceptance of a displayed default value.
Additional Information: Similar techniques, e.g., tabbing past the default field, should be used when a user must review the accuracy of previously entered data.[5908]

2.1-58 User Definition of Default Values

Users should be permitted to define, change, or remove default values for any input field.
Additional Information: Users should be allowed to replace any default value with a different entry, without thereby changing the default definition for subsequent transactions. The direct replacement of a default value in a data field with a new value should not change the definition of the default value.[5908, 6546]

2.1-59 Indicating Control Defaults

When keyed command or option code entries are used and a default is defined for a null control entry, the default should be indicated to the user.[5908]

2.1-60 Single Method for Input

Input transactions and associated displays should be designed so that a user can stay with one method of entry, and not have to shift to another.
Additional Information: For example, shifts from mouse to keyboard entry and then back again should be minimized. Forcing users shift from one keyboard to another, or move from one workstation to another, to accomplish different input tasks should also be avoided.[5908]

2.1-61 Upper and Lower Case Equivalent

For interpreting user-composed control entries, upper and lower case letters should be treated as equivalent.
Additional Information: Users find it difficult to remember whether upper or lower case letters are required, and so the interface design should not try to make such a distinction.[5908]

2.1-62 Justification of Entries

Unless otherwise required by processing or display requirements, alphabetic input should be left justified, and numeric input should be right justified for integer data or decimal point justified for decimal data.

Additional Information: Optional entry or omission of a decimal point at the end of an integer should be allowed as equivalent alternatives.[5908]

2.1-63 Automatic Justification of Entries
Automatic justification of tabular data entries should be provided.
Additional Information: A user should not have to enter blanks or other extraneous formatting characters to achieve proper justification. For example, if a user enters "56" in a field four characters long, the system should not interpret "56 __ __" as "5600". For general numeric data, optional entry or omission of leading zeros should be allowed as equivalent alternatives. If a user enters "56" in a field that is four characters long, the system should recognize that entry rather than requiring an entry of "0056". Special cases may represent exceptions to this rule, such as entry of serial numbers or other numeric identifiers.[5908]

2.1-64 Maintaining Significant Zeros
When a user must enter numeric values that will later be displayed, all significant zeros should be maintained.
Additional Information: Zeros should not be arbitrarily removed after a decimal point if they affect the meaning of the number in terms of significant digits.[5908]

2.1-65 Significance of Numeric Values
Numeric values should be displayed to the level of significance required of the data, regardless of the value of individual input data.[5908]

2.1-66 Overwriting Characters
Data entry by overwriting a set of characters within a field should be avoided.
Additional Information: If a user chooses to alter the contents of a field, the displayed previously existing entry (e.g., a default value or label) should be cleared from the input field.[5908]

2.1-67 Consistent Location of Interface Management Controls
Controls used for interface management tasks should have consistent locations.
Additional Information: Interface management controls include user interfaces for selecting displays and navigating within displays. Examples include command fields, function buttons, and scroll bars. Consistent locations are one way to uniquely identify interface management controls to support users in identifying and accessing them.[6546]

2.1-68 Location of Display Page Navigation Controls
Controls for navigating within a display page should be separate from the main body of the display screen.
Additional Information: Examples of controls for navigating within displays include command fields, function buttons, and scroll bars.[6546]

2.1-69 Set-Up of Computer-Based Systems
Preset and automated set-up features should be used to ensure that users do not have to perform these functions while operating the plant.

Additional Information: Preset features are ready to use without a separate set-up operation. Automated set-up features are performed by the system rather than by personnel. The demands associated with setting up a computer-based system prior to its use can distract the user from primary tasks. Preset and automated set-up features should be used to minimize system set-up demands that may interfere with primary tasks.[6546]

2.1-70 Reminders for Interrupted Tasks
The HSI should provide visual and/or auditory reminders for interrupted tasks.[6546]

2.1-71 Access to Suspended Tasks
The HSI should provide simple mechanisms for retrieving displays and controls for tasks that have been suspended.
Additional Information: Extensive effort should not be required to either retrieve the display or reconfigure the display so that work may resume on a suspended task.[6546]

2.1-72 Entry of Data Separators and Delimiters
The user should not be required to enter data separators or delimiters, such as dashes and slashes.
Additional Information: The entry of data separators and delimiters can be time consuming and error prone.[6546]

2.1-73 Entry of Measurement Units
The user should not be required to enter units of measure.
Additional Information: The entry of dimensional units (e.g., 'gpm') can be time consuming and error prone.[6546]

2.1-74 Minimize Cursor Travel
Travel distance for cursors across and between display pages and windows on a display screen should be minimized.
Additional Information: Unnecessary cursor movement can increase information access cost and divert mental resources from more important tasks by requiring the user's attention and time for execution.[6546]

2.1-75 Default Configuration for Decluttering
Displays that can provide decluttering capabilities should also provide a means for the user to rapidly return the display to its original configuration.[6546]

2 USER-INTERFACE INTERACTION AND MANAGEMENT
2.2 User Input Formats
2.2.1 Command Language

2.2.1-1 Layered Command Language
A command language should be designed so that its functions are organized in groups (or "layers") for ease in learning and use.
Additional Information: A user should be able to display the next of a set of received messages with some simple command such as READ NEXT, although a complete command to retrieve any message might include potential specification of which message, from which message list, in which format, to which output device. The fundamental layer of the language should be the easiest, allowing use of the system by people with little training and/or limited needs. Successive layers of the command language can then increase in complexity for users with greater skills. In effect, simple versions of commands can be recognized by defaulting all of the optional parameters. Control forms might be used to display default options for complicated commands.[5908]

2.2.1-2 General List of Commands
A general list of basic commands, with appropriate command format guidance, should be available to the user.[5908]

2.2.1-3 Distinctive Meaning for Commands
Words in a command language should be distinctive from one another, and emphasize significant differences in function.
Additional Information: In general, commands should not have semantically similar names, such as SUM and COUNT, or ERASE and DELETE, or QUIT and EXIT.[5908]

2.2.1-4 Distinctive Spelling for Commands
Words and abbreviations in a command language should have distinctive spelling, so that simple spelling errors will be recognized as such rather than invoking a different command.
Additional Information: If one command name is DELETE, abbreviated DEL, then another command should not be named DELIVER, with an abbreviation of DELR. Instead, ERASE could be substituted for DELETE, or SEND for DELIVER. When a system has only a few commands, all of those commands should be distinctive. When a system has many commands, it may not be possible to ensure that each is distinctive. In that case, it is important to ensure that any commands that are destructive or time-consuming are made distinctive.[5908]

2.2.1-5 Abbreviation of Commands
Users should be allowed to abbreviate commands.
Additional Information: Entries should not exceed 7 characters. Users should be required to enter only as many characters as needed to uniquely identify the desired command. For example, if a "P" uniquely identifies a print command (i.e., no other commands start with "P"), then a user should be able to enter PRINT, or PR, or P to initiate printing.[5908, 0700]

2.2.1-6 Recognizing Command Synonyms
The computer should recognize a variety of synonyms for each word defined in the command language.
Additional Information: The synonyms that are likely to be used can be determined by analysis of error records in prototype testing. This flexibility can allow infrequent users to interact with a system more efficiently. The user may be required to verify commands recognized in this way. It may be useful, for example, for the system to accept "UP" as well as "RAISE."[5908]

2.2.1-7 Interpreting Misspelled Commands

Where the set of potential command entries is well defined, the computer should recognize and execute common misspellings of commands, rather than requiring re-entry.
Additional Information: Misspelled command entries should be tolerated within the limits of computer recognition. The user may be required to verify commands recognized in this way. The computer can interrogate a user as necessary to resolve ambiguous entries.[5908]

2.2.1-8 Recognizing Alternative Syntax

The computer should recognize probable alternative forms of command syntax.
Additional Information: Users might be allowed to use different punctuation and/or to list command modifiers in different orders. For example, the computer might accept alternative methods of specifying a request, such as "SG3 LVL," "LVL SG3," or "LVL/SG3."[5908]

2.2.1-9 User-Assigned Command Names

A command language should have flexibility to permit a user to assign personal names to frequently used commands.
Additional Information: Frequently used commands should be easy for a user to enter. For users who must move back and forth between different systems with differently defined command languages, some flexibility in command naming will permit those users to establish their own consistent terminology. Where this capability exists, several cautions should be observed. Before users can be allowed to adopt their own assigned command names, the computer must check those names to prevent duplication. In addition, there is a potential risk of confusion if users forget what names they have specified for commands and data files. The computer should maintain a current index of command and file names for on-line user reference.[5908]

2.2.1-10 User-Requested Prompts

Users should be allowed to request computer-generated prompts as necessary to determine required parameters in a command entry, or to determine available options for an appropriate next command.
Additional Information: Users might request prompting by using a HELP function key, or perhaps simply keying a question mark in the command entry area.[5908]

2.2.1-11 Minimal Punctuation

Users should be allowed to enter commands without any punctuation other than the spaces between words.
Additional Information: Command entry will be faster and more accurate when spaces are used rather than any other kind of punctuation.[5908]

2.2.1-12 Ignoring Blanks in Command Entry

Single and multiple blanks between words should be treated as equivalent when processing command entries.
Additional Information: People cannot readily distinguish one blank space from several, and so the computer should not impose such a distinction.[5908]

2.2.1-13 Standard Delimiter

If command punctuation other than spaces is required, a single standard delimiter symbol should be used for that purpose.

Additional Information: Command punctuation other than spaces may be required as a delimiter to distinguish optional parameters, or to separate entries in a stacked command. For example, a slash (/) might be a good choice. Whatever symbol is adopted as a delimiter for command entries should preferably be the same as any delimiter that might be used when making data entries. Note, however, that even if some single delimiter is specified for consistent use in command punctuation, command entry will be slower and less accurate than if no delimiter at all were required.[5908]

2.2.1-14 Illustrations in Guidance Information
Where possible, guidance information should be accompanied with graphical illustrations of command content and syntax.[5908]

2.2.1-15 User-Defined Abbreviations and Aliases
Experienced users should be able to define abbreviations or aliases for commands.
Additional Information: Abbreviations and aliases can reduce the time required to enter commands.[6546]

2.2.1-16 Aiding Command Recall
The system should provide features that support users in recalling command names.
Additional Information: Some of the features that can provide such support include:

- User-requested prompts – These are prompts invoked by the user (e.g., via on-line help or function keys) which may indicate the allowable parameters of a command entry or available command options.
- User-assigned command names – Some display systems allow the users to assign names to commands. This capability may support recall, for example, when users must use more than one display system having differently defined commands. By providing some flexibility in renaming the commands, users can enhance the consistency between the dialogues.
- Layering of commands – Command dialogues may be designed so that functions are organized in related groups or layers.[6546]

2.2.1-17 Accepting Minor Variations
The system should tolerate minor variations in input commands for interface management functions.
Additional Information: Examples of this capability include recognition of command synonyms, interpretation of slightly misspelled commands, ability to ignore unnecessary blank spaces, and recognition of simplified command formats (i.e., minimal use of punctuation and delimiters).[6546]

2 USER-INTERFACE INTERACTION AND MANAGEMENT
2.2 User Input Formats
2.2.2 Menus
2.2.2.1 General

2.2.2.1-1 Explicit Option Display
When control entries for any particular transaction will be selected from a small set of options, those options should be displayed in a menu added to the working display, rather than requiring a user to remember them or to access a separate menu display.
Additional Information: A complete display of control options will sometimes leave little room for display of data. If an extensive menu must be added to a working data display, that menu should be provided as a separate window that can temporarily overlay displayed data at user request, but can then be omitted again by further user action.[5908]

2.2.2.1-2 Consistent Display of Menu Options
When menus are provided in different displays, they should be designed so that option lists are consistent in wording and ordering.
Additional Information: If menu options are variable, common elements should maintain their physical relationship to other recurring elements. For example, if the SEND command appears above EXIT in one menu, it should not appear below EXIT in another menu, or be denoted differently (e.g., by the word SUBMIT).[5908]

2.2.2.1-3 Consistent Location for Menus
Menus should be displayed in consistent screen locations for all modes, transactions, and sequences.
Additional Information: This applies to pop-up, pull-down, and windowed menus, and to menu bars.[5908]

2.2.2.1-4 Consistent Entry Prompt
When permanent menus are used, there should be one standard design for the input prompt that is used across all tasks.
Additional Information: A consistent prompt unambiguously indicates the need for user input. For example, "ENTER CHOICE: __."[5908]

2.2.2.1-5 Permanent Menus Minimized
The use of permanent menus should be minimized.
Additional Information: Permanent menus require dedicated display space and more paging activity (because the application must return the user to the main menu page at every task change). However, permanent menus might be used when (1) it is beneficial to examine every option in detail, (2) the amount of text in each menu item is large, or (3) there is no pointing device available.[5908]

2.2.2.1-6 Activation of Pull-Down and Pop-Up Menus
Pull-down and pop-up menus should be activated only by a specific user action that requests the display of the menu.
Additional Information: Menus should not appear simply because the cursor has passed over the menu title.[5908]

2.2.2.1-7 User Requested Menus: Pull-Downs and Pop-Ups
User requested menus should be used whenever possible.

Additional Information: Among the types of user-requested menus, pull-down menus provide two advantages over pop-up menus: (1) the menu bar serves as a useful mnemonic aid, showing the user the command categories available in the menu; and (2) gaining visual access to the menu items within a category, selecting the item, and removing the menu can be accomplished with a minimal number of actions. The primary advantage of a pop-up menu over a pull-down menu is that, depending on the specific implementations, the user may have immediate access to the menu at the screen location of the selection action. The ideal user-requested menu design would provide the user with a reminder of the menu categories and allow the user to select an item with few actions and little movement of a cursor on the screen.[5908]

2.2.2.1-8 Hiding Menus After a Command is Carried Out
When a pull-down or pop-up menu item(s) has/have been selected, the menu should revert to its hidden state as the selected command is carried out.[5908]

2.2.2.1-9 Programmable Keys
If menu items are selectable via activation of programmable function keys, the arrangement of the menu list should be compatible with the arrangement of the keys to the greatest degree possible.[5908]

2.2.2.1-10 Explanatory Title for Menu
An explanatory title should be provided for each menu that reflects the nature of the choice to be made.
Additional Information: EXAMPLE: (Good) Organizational Role: r = Responsible, a = Assigned, p = Performing. (Bad) Select: r = Responsible, a = Assigned p = Performing. When instructions to the user accompany a list of options, the instructions should precede presentation of the list.[5908, 0700]

2.2.2.1-11 Complete Display of Menu Options
A menu should be designed to display all options appropriate to any particular transaction.
Additional Information: A familiar set of general control options (i.e., options that are always implicitly available) may be omitted from individual displays. Such general options might be selected by requesting a general menu, or perhaps by function key or command entry.[5908]

2.2.2.1-12 Option Display Dependent on Context
Menus should display as selectable only those options that are actually available in the current context.
Additional Information: If a user selects a displayed option, and is then told that option is not actually available, an undesirable element of unpredictability has been introduced into the interface design. Users may become uncertain and confused about command entry. There should be some indication of which options are currently available; see Guideline 2.2.2.5-8.[5908, 0700]

2.2.2.1-13 Function of Menu Should Be Evident
Menus should be designed so that the function of the menu is evident to the user.[5908]

2.2.2.1-14 Menus Distinct from Other Displayed Information
If menu options are included in a display that is intended also for data review and/or data entry, the menu options should be distinct from other displayed information.
Additional Information: Menu options should be located consistently in the display and incorporate some consistent distinguishing feature to indicate their special function, perhaps beginning with a special symbol such as a plus sign (+NEXT or +BACK). "Embedded menus," in which various items within a working display are highlighted in some way to indicate that they can be selected to obtain further information, may also be used.[5908]

2.2.2.1-15 Breadth and Depth of Menu Items
Menus should have a limited number of items in breadth and in depth.
Additional Information: Moderate menu breadth (e.g., number of menus in a menu hierarchy, number of menu categories in a menu bar, or number of pop-up menus) and depth (e.g., number of items per menu or, in menu bars, per menu category) should be facilitated by the use of a hierarchical menu structure whereby the selection of items from one menu (the parent) activates a second menu (the child) with further options. The parent menu should remain visible during the selection of the child menu. The number of levels in the hierarchy should be limited (for example, to no more than three).[5908]

2.2.2.1-16 Number of Options
Each menu option list should have 4 to 8 options.
Additional Information: Menus with only two options should be avoided. "Menus" with only one item should not be used.[5908]

2.2.2.1-17 Equivalent Keyboard Commands
When equivalent keyboard commands are provided, they should be displayed as part of the menu option label.[5908]

2.2.2.1-18 Continuous Presentation of Menu
If continual or frequent reference to menu options is necessary, then the menu should be permanently presented in an area of the screen where it will not obscure other data.
Additional Information: If only occasional reference to menu options is necessary, the menu may be presented upon demand.[6546]

2.2.2.1-19 Providing Default Options
If one option on a menu is selected more often than the others, then it should be highlighted.
Additional Information: Search and selection is enhanced by highlighting and preselecting the default option. For example, the cursor may be automatically positioned over the default option, or the text string for the default option may automatically appear in the input field.[6546]

2.2.2.1-20 Option Previews
Where discrimination among options may be difficult for users, menus can provide a preview of options.
Additional Information: This will support the user in determining which of the current options should be selected.[6546]

2.2.2.1-21 Visual Grouping of Menu Options
If meaningful categories cannot be developed for menu options then visual groups should be created for long menus.
Additional Information: Non-categorized menus may be divided into arbitrary visual groupings through the use of space or lines. The groups should be as equal in size as possible. Each group should consist of four to seven options. The use of visual grouping can facilitate visual search.[6546]

2.2.2.1-22 Critical or Frequently Chosen Options
Options that are critical or frequently chosen should be quickly accessible using as few steps as possible.
Additional Information: Immediate access may be provided through such approaches as dedicated buttons and placing the option on multiple menus.[6546]

2.2.2.1-23 Initial Cursor Position
When a menu is first displayed, the cursor should be positioned so that it may be readily located and used.

Additional Information: Cursor positioning can reduce unnecessary visual search and cursor movement. If the cursor appears within the menu, then the cursor should be placed beside the option with the highest probability of selection. If the options are about equally likely, then the cursor should be placed beside the first option.[6546]

2.2.2.1-24 Menu Macro Capability
A menu macro capability should be provided if it produces faster access.
Additional Information: A menu macro capability allows a navigation path to be recorded. The path can then be executed by the user through a command. This capability can reduce the number of navigation steps, compared to accessing a series of menus in sequence. It may provide faster access to information for experienced users.[6546]

2.2.2.1-25 Use of Multiple Paths
Multiple navigation paths should be provided to items in the display system.
Additional Information: Multiple navigation paths should accommodate a range of user experience in navigating the display system. Highly experienced users should be allowed to use shortcuts, such as 'type-ahead' or 'jump-ahead' to reduce the number of interface management actions required to navigate through the display selection system.[6546]

2.2.2.1-26 Representation of Menu Structure
A visual representation of the menu structure should be provided.
Additional Information: Where space allows, some aspects of the menu structure should be presented visually so the user is not required to remember it. That is, information should be provided in the user interface to augment or substitute for the user's knowledge of the display navigation structure.[6546]

2.2.2.1-27 Indicating Selectable Menu Items
Menu systems should clearly indicate which options are selectable.
Additional Information: Two techniques for preventing users from selecting inappropriate options are to present (1) only relevant options and exclude the others, and (2) all options, using a code to designate those that are relevant or available. Three considerations regarding the appropriateness of these methods include the type of options presented (e.g., actions versus destinations), the number of options associated with each node, and the number of options that are applicable to multiple nodes. For example, there may be many options representing destinations in the information structure and only a few of them may be relevant to a particular location in the display network (e.g., the number of parent and descendant nodes that can be accessed from a given node is small compared to the total number of nodes in the network). Thus, for menus containing destination options, it would seem practical to present only the relevant options, rather than all options, and use a code to designate those that are relevant or available. Compared to destination options, options that indicate actions may be more limited in number. In addition, action options may apply to multiple nodes (e.g., the same set of actions may be applicable to a large number of display pages). In such cases, it may be possible to present all options and use a code to designate those that are appropriate. Presenting the irrelevant or unavailable action options using a low-salience code may reinforce learning of the locations of options on the menu panels and, thus, decrease option selection time. The relative advantages of these two methods are not fully understood. In addition, the effects of using both methods in combination (e.g., for menu systems that contain both action and destination options) are not fully understood.[6546]

2.2.2.2-1 Logical Ordering of Menu Options

Menu options should be ordered and grouped logically.
Additional Information: If no logical structure is apparent, then the options should be displayed in order of their expected frequency of use, with the most frequent listed first. When applicable, a menu should indicate logically related groups of options, rather than an undifferentiated string of alternatives. For example, in vertical listing of options, subordinate categories might be indented. Logical grouping of menu options will help users learn system capabilities. When logical grouping requires a trade-off against expected frequency of use, that trade-off should be resolved consistently for those functions throughout the menu structure.[5908]

2.2.2.2-2 Default Ordering of Menu Options

Where ordering cannot be determined by the above, alphabetic ordering should be used.[5908]

2.2.2.2-3 No Scrolling in Menus or Menu Bars

All menu items should be visible to the user without scrolling.
Additional Information: This guideline applies to permanent menus as well as pop-up or pull-down menus and menu bars. The number of categories listed on the menu bar should not exceed the length of the bar.[5908]

2.2.2.2-4 Single-Column List Format

When multiple menu options are displayed in a list, each option should be displayed on a new line, i.e., format the list as a single column.
Additional Information: Displaying options in several columns may be used where shortage of display space dictates a compact format. If there are only a few options, those might be displayed in a single row. An exception could be made for hierarchic menus, where a high-level menu might be shown in the left column of a display, accompanied by a lower-level menu in the right column whose options change to reflect whatever selection is currently made from the high-level menu. A single column format will aid scanning, especially for novice users.[5908]

2.2.2.2-5 Fixed Menu Order

The order of options on menus should be fixed.
Additional Information: The order of options on a menu should not change automatically, such as based on their frequency of use.[6546]

2.2.2.3-1 Labeling Grouped Options

If menu options are grouped in logical subunits, each group should have a descriptive label that is distinctive in format from the option labels themselves.
Additional Information: Although this practice might sometimes seem to waste display space, it will help provide user guidance. Moreover, careful selection of group labels may serve to reduce the number of words needed for individual option labels.[5908]

2.2.2.3-2 Hierarchic Menus for Sequential Selection

When menu selection must be made from a long list, and not all options can be displayed at once, a hierarchic sequence of menu selections should be provided rather than one long multipage menu.
Additional Information: Where a long list is already structured for other purposes, such as a list of customers, a parts inventory, or a file directory, it might be reasonable for the user to be required to scan multiple display pages to find a particular item. Even in such cases, however, an imposed structure for sequential access may prove more efficient, as when a user can make preliminary letter choices to access a long alphabetic list. Beginning users may learn faster and understand better a menu permitting a single choice from all available options, when those can be displayed on one page. However, a single long menu that extends for more than one page will hinder learning and use.[5908]

2.2.2.3-3 Consistent Design of Hierarchic Menus

The display format and selection logic of hierarchic menus should be consistent at every level.[5908]

2.2.2.3-4 Labeling in Hierarchic Menus

Hierarchic menus should be organized and labeled to guide users within the hierarchic structure.
Additional Information: users will learn menus more quickly if a map of the menu structure is provided as HELP.[5908]

2.2.2.3-5 Visual Representation of Path

Users should be able to access a visual representation of their paths through a hierarchy of menus.
Additional Information: How the user's path through the menus is visually represented will depend on the type of menu. For example, if a user progresses through a series of permanent menus, an icon showing the previous menus and current menus, as well as menu selections, might be displayed. If a user progresses through a series of pull down menus, the previous menus might remain displayed with the selected item highlighted, and the association between that item and the subsequent menu would be represented by a close spatial relation (e.g., a walking menu).[5908]

2.2.2.3-6 Minimal Steps in Sequential Menu Selection

When users must step through a sequence of menus to make a selection, the hierarchic menu structure should be designed to minimize the number of steps required.
Additional Information: This represents a trade-off against the need for logical grouping in hierarchic menus. The number of hierarchic levels should be minimized, but not at the expense of display crowding.[5908]

2.2.2.3-7 Return to Higher-Level Menus

Users should have to take only one simple key action to return to the next higher level in hierarchic menus.
Additional Information: This action could be considered analogous to the BACK option.[5908]

2.2.2.3-8 Indicating Current Position in Menu Structure
When hierarchic menus are used, the user should have some indication of current position in the menu structure.
Additional Information: One possible approach would be to recapitulate prior (higher) menu selections on the display. If routine display of path information seems to clutter menu formats, then a map of the menu structure might be provided at user request as a HELP display.[5908]

2.2.2.3-9 Distinct Subordinate Menus
If hierarchical branching is used, each subordinate menu should be visually distinct from each previous superordinate menu.
Additional Information: Examples include the display of level numbers and a graphical stacking effect. Successful user operations depend on a knowledge of context. The user needs to know the levels from which the current display menu came and how far down in the hierarchy the current menu is.[5908]

2.2.2.3-10 Control Options Distinct from Menu Branching
The display of hierarchic menus should be formatted so that options that actually accomplish control entries can be distinguished from options, which merely branch to other menu frames.
Additional Information: In some applications, it may prove efficient to design "hybrid" menus which display one branch of the menu hierarchy elaborated to include all of its control options, while other branches are simply indicated by summary labels. In such a hybrid menu, it will help orient users if options that accomplish control actions are highlighted in some way to distinguish them from options that will result in display of other frames of the hierarchic menu.[5908]

2.2.2.3-11 Return to General Menu
Users should have to take only one simple key action to return to the general menu at the top level in hierarchic menus.
Additional Information: The user should not have to backtrack to return to the starting level in a hierarchical menu system. This capability can be provided by dedicating a program function key, touch field, or a cursor entry field to display the main menu. This action could be considered analogous to the REVIEW option.[5908]

2.2.2.3-12 Use of Broad, Shallow Menu Structures
Broad and shallow menu structures, rather than narrow and deep menu structures should be used.
Additional Information: Examples of a broad, shallow menu structure and narrow, deep menu structure are provided in Figure 2.1.[6546]

2.2.2.3-13 Minimizing Menu Choices In the Middle of a Menu Structure
The number of menu choices should be minimized on menus located midway in a hierarchical menu structure.
Additional Information: Users are more likely to get lost in the middle levels of a menu structure.[6546]

2.2.2.3-14 Direct Selection of Submenus
Users should be able to select a menu or submenu directly, without going through intermediate selection steps.
Additional Information: One method for avoiding intermediate selection steps is to allow users to select nodes directly from a representation of the menu structure.[6546]

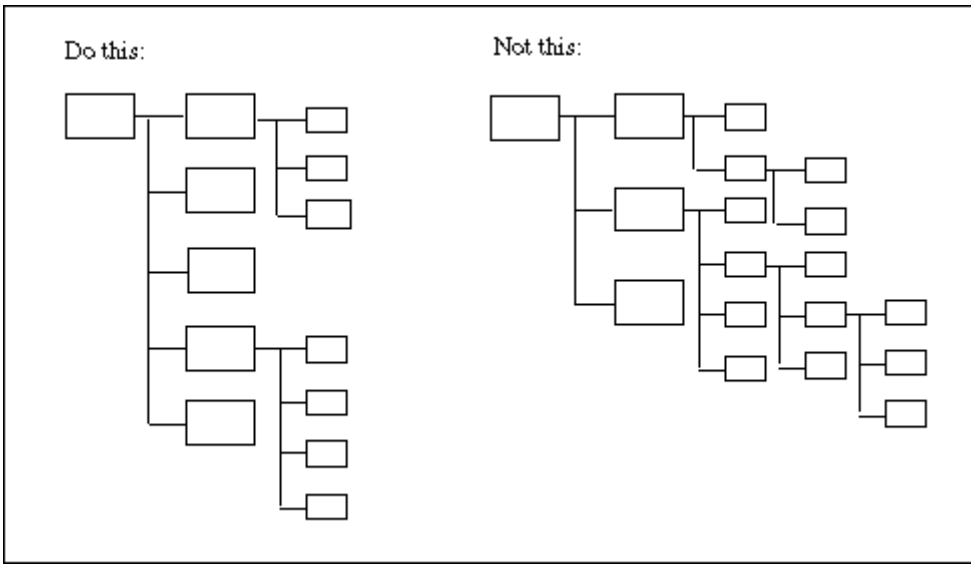

Figure 2.1 Examples of broad and shallow menu structures

2.2.2.4-1 Systematic Organization of Items on Menu Bar

The categories listed across the menu bar should be organized systematically.
Additional Information: Conventions should be established for the organization of the menu bar. For example, the categories on the left side of the menu bar might be system functions that apply across all (or most) applications. The categories on the right side of the menu bar might be those that are specific to the currently active application. Within this general spatial layout, both the system-wide and specific categories would be ordered from left (the category containing the most frequently used actions) to right (the category containing the least frequently used).[5908]

2.2.2.4-2 Category Labels on Menu Bar

Category labels on menu bars should be centered in the vertical dimension. Horizontally, category labels on the menu bar should be separated by enough space to be distinguishable as separate items, i.e., by at least two standard character widths.
Additional Information: One standard character width would be required to separate adjacent words in a multiword category. To indicate separate categories, more than one width would be needed.[5908]

2.2.2.4-3 Height of Menu Bar

The height of a menu bar should be sufficient to contain standard text characters that serve as menu category labels, as well as space above and below the text characters.[5908]

2.2.2.5-1 Menu Selection by Keyed Entry
When menu selection is a secondary (occasional) means of control entry, and/or only short option lists are needed, then selection by keyed entry should be provided.
Additional Information: An option might be selected by keying an associated code included in the displayed menu listing. Alternatively, if menu labels can be displayed near a screen margin, then an option might be selected by pressing an adjacent multifunction key.[5908]

2.2.2.5-2 Standard Area for Code Entry
When menu selection is accomplished by code entry, a standard command entry area (window) should be provided where users enter the selected code.
Additional Information: That entry area should be in a fixed location on all displays. In a customary terminal configuration, where the display is located above the keyboard, command entry should be at the bottom of the display, in order to minimize user head/eye movement between the display and the keyboard. Experienced users might key coded menu selections in a standard area identified only by its consistent location and use. If the system is designed primarily for novice users, however, that entry area should be given an appropriate label, such as "ENTER choice here: ___."[5908]

2.2.2.5-3 Stacking Menu Selections
Users should be able to combine a series of selections into a single "stacked" entry.
Additional Information: If necessary, stacked sequential entries might be separated by some character, such as a space, slash, comma, or semicolon. It would be preferable, however, if they were simply strung together without special punctuation. Computer interpretation of an unpunctuated string will require letter codes (by preference) or fixed-digit number codes for option selection.[5908]

2.2.2.5-4 Bypassing Menu Selection with Command Entry
Experienced users should be able to bypass a series of menu selections and make an equivalent command entry directly.
Additional Information: In effect, a command entry might specify an option anywhere in a hierarchic menu structure, permitting a user to jump down several levels, or to move directly from one branch to another. If a command bypasses only a portion of the complete menu sequence, and so does not yet specify a complete control entry, then the appropriate next menu should be displayed to guide completion of the control entry.[5908]

2.2.2.5-5 Menu Selection by Pointing
When menu selection is the primary means of command entry, and especially if choices must be made from extensive lists of displayed control options, option selection by direct pointing should be provided.
Additional Information: If a capability for direct pointing is not provided (e.g., if pointing involves separate manipulation of a mouse, or cursor positioning by key action), then for long menus it may prove faster to permit menu selection by keying associated option codes. Pointing directly at a displayed option guarantees good display-control compatibility. Users do not have to note associated option codes and enter them by key actions.[5908]

2.2.2.5-6 Acknowledgment of Menu Selection
When a menu item is chosen, the system should display some acknowledgment of that entry.
Additional Information: Acknowledgment that an item has been chosen is often indicated by highlighting the menu item.[5908]

2.2.2.5-7 Non-Selection of Conflicting Menu Items
Users should not be able to select menu items that are in conflict.
Additional Information: Menu items that are in conflict might be, for example, two different font sizes in a text input task. Users should, however, be able to select multiple menu items that are not in conflict (e.g., a font size and font type in text input). Each menu item selection would be a separate transaction with the system.[5908]

2.2.2.5-8 Non-Selectable Menu Items
When menu items are not selectable, they should be identified as such to the user.
Additional Information: Options that are temporarily not available may still appear in a menu; see Guideline 2.2.2-36. If non-available options must be displayed, they should be visually distinct from the options that are available. For example, options that are temporarily unavailable may be coded (e.g., presented in gray) to indicate their status.[5908]

2.2.2.5-9 Separate Selection and Activation Actions
If menu selection is accomplished by pointing, dual activation should be provided, in which the first action designates the selected option, followed by a separate second action that makes an explicit control entry.
Additional Information: The two actions of cursor placement and entering should be compatible in their design implementation. If the cursor is positioned by keying, then an ENTER key should be used to signal control entry. If the cursor is positioned by light pen, the pen should have a dual-action "trigger" for cursor positioning and control entry. On a touch display, the computer might display a separate ENTER box that can be touched by a user to indicate that the cursor has been properly positioned. This recommendation for dual activation of pointing assumes that accuracy in selection of control entries is more important than speed. In some applications that may not be true.[5908]

2.2.2.5-10 Large Pointing Area for Option Selection
If menu selection is accomplished by pointing, the acceptable area for pointing should be as large as consistently possible, including at least the area of the displayed option label plus a half-character distance around that label.
Additional Information: The larger the effective target area, the easier the pointing action will be, and the less risk of error in selecting a wrong option by mistake.[5908]

2.2.2.5-11 Selection of ON/OFF Items
Selection of menu items with "On" and "Off" states should change their state.[5908]

2.2.2.5-12 Indicating Selected Menu Items
Menu systems should provide feedback indicating which options have been selected so far.[6546]

2.2.2.5-13 Indicating Selectable Area
Menu systems should provide feedback indicating when a pointing device has entered the selectable area of an option.[6546]

2.2.2.5-14 Indicating Completion of Selection
Menu systems should provide feedback indicating when the selection process is ended.[6546]

2.2.2.6-1 Menu Options Worded as Commands

The wording of menu options should consistently represent commands to the computer, rather than questions to the user.

Additional Information: Wording options as commands will permit logical selection by pointing, facilitate the design of mnemonic codes for keyed entry, and help users learn commands in systems where commands can be used to bypass menus. Wording options as commands properly implies that the initiative in command entry lies with the user. Wording options as questions implies initiative by the computer. For example, for option selection by pointing, a "+" (or some other special symbol) might be used consistently to distinguish a selectable control option from other displayed items, e.g., (Good) +PRINT; (Bad) PRINT?. For option selection by code entry, the code for each option should be consistently indicated, e.g., (Good) p = Print; (Bad) Print? (Y/N).[5908]

2.2.2.6-2 Option Wording Consistent with Command Language

If menu selection is used in conjunction with or as an alternative to command language, the wording and syntactic organization of displayed menu options should correspond consistently to defined elements and structure of the command language.

Additional Information: Where appropriate, cumulative sequences of menu selections should be displayed in a command entry area until the user signals entry of a completely composed command.[5908]

2.2.2.6-3 Consistent Coding of Menu Options

If letter codes are used for menu selection, those letters should be consistently used in designating options from one transaction to another.

Additional Information: Different codes for the same action will tend to confuse users and impede learning. The same code for different actions will tend to induce user errors, especially if those actions are frequently taken. However, this practice may be tolerable when selections are seldom taken, and then always taken from labeled alternatives. The same action should not be given different names (and hence different codes) at different places in a transaction sequence, such as f = Forward and n = Next. The same code should not be given to different actions, e.g., q = Quit and q = Queue.[5908]

2.2.2.6-4 Key Coded Menu Selection

The code associated with each option should be displayed in a consistent and distinctive manner.

Additional Information: Periods should be placed after item selection designators. Selection designators should be separated from text descriptors by at least one blank space.[5908, 0700]

2.2.2.6-5 Menu Color

If menu options are grouped in logical subunits, the same color should be used for menus within the same group.[5908]

2.2.2.6-6 Letter Codes for Menu Selection

If menu selections are made by keyed codes, each code should be the initial letter or letters of the displayed option label, rather than assigning arbitrary letter or number codes.

Additional Information: Meaningful (as opposed to arbitrary) codes will facilitate learning and reduce errors. For example, m = Male, f = Female is preferable to 1 = Male, 2 = Female. Options might be numbered when a logical order or sequence is implied. When menu selection is from a long list, the line numbers in the list might be an acceptable alternative to letter codes.[5908]

2.2.2.6-7 Highlighting When Cursor Passes Over Item

Menu items that are available should be highlighted whenever the cursor passes over them.

Additional Information: As soon as the cursor passes outside the boundaries of the menu item the item should return to its normal state. Unavailable options should not highlight when the cursor passes over them.[5908]

2.2.2.6-8 ON/OFF Menu Items
For menu items that can be in an "On" or "Off" state, the "On" state should be indicated by making the item more prominent.[5908]

2.2.2.6-9 Indication of Active Menu Selection
The active menu selection should be indicated to the user.
Additional Information: More than one method of indication should be used if possible, such as changes in font size and color.[6546]

2.2.3-1 Function Keys for Interim Command Entries

Function keys should be provided for interim command entries, i.e., for actions taken before the completion of a transaction.
Additional Information: Function keys will aid such interim actions as DITTO, CONFIRM, and requests for PRINT, or HELP, and also interrupts such as BACKUP and CANCEL. Interim control refers to an action taken by a user while working with displayed data, e.g., while still keying data entries or changes. Function keys will aid interim control entries partly because those entries may be frequent.[5908]

2.2.3-2 Distinctive Labeling of Function Keys

Each function key should be labeled informatively to designate the function it performs.
Additional Information: Labels should be sufficiently different from one another to prevent user confusion. For example, two keys should not be labeled ON and DN.[5908]

2.2.3-3 Distinctive Location

Function keys should be grouped in distinctive locations on the keyboard to facilitate their learning and use.
Additional Information: Frequently used or important function keys should be placed in the most convenient or prominent locations.[5908]

2.2.3-4 Consistent Assignment of Function Keys

A function assigned to a particular key in a given task context should be assigned to the same key in other contexts.
Additional Information: A particular function should be accessed in the same manner in any context in which it is used. For example, the SAVE function should be invoked using the same key whether the user is saving edited information or new information.[5908]

2.2.3-5 Single Key for Continuously Available Functions

When a function is continuously available, its function should be assigned to a single key.[5908]

2.2.3-6 Single-Keying for Frequent Functions

Frequently used functions should be executed by means of a single key action and should not require chord-keying (e.g., use of the shift key).[5908]

2.2.3-7 Consistent Functions in Different Operational Modes

When a function key performs different functions in different operational modes, equivalent or similar functions should be assigned to the same key.
Additional Information: Functions assigned to a given key in different modes should be related. For example, a particular key might be used to confirm data changes in one mode, and confirm message transmission in another. As a negative example, a key labeled RESET should not be used to save data in one mode, dump data in another, and signal task completion in a third.[5908]

2.2.3-8 Logical Pairing of Chord-Keyed Functions

If chord-keying is used, the functions paired on one key should be logically related.

Additional Information: Functions assigned to a given key should be related. For example, if a particular function key moves the cursor to the upper left corner of a display screen, then that same key when shifted might be used to move the cursor to the bottom right corner of the screen. As a negative example, a function key that moves the cursor should not be used when shifted to delete displayed data.[5908]

2.2.3-9 Consistent Logic for Double Keying
If double (control/shift) keying is used, the logical relation between shifted and unshifted functions should be consistent from one key to another.
Additional Information: Consistency in the underlying logic for double keying will help a user to learn the functions associated with different keys. For example, one consistent logic might be that shifted and unshifted functions are opposite, so that if a particular key moves the cursor forward, then that key, when shifted, would move the cursor backward. Another possible logic might be that shifted and unshifted functions are related by degree, so that if a particular key deletes a single displayed character, then that key, when shifted, would delete a word.[5908]

2.2.3-10 Labeling Multifunction Keys
If a key is used for more than one function, the function currently available should always be indicated to the user.
Additional Information: If a key is used for just two functions, depending upon defined operational mode, then alternate illuminated labels might be provided on the key to indicate which function is current. In those circumstances, it is preferable that only the currently available function is visible, so that the labels on a group of keys will show what can be done at any point. If key function is specific to a particular transaction, an appropriate guidance message on the user's display should be provided to indicate the current function.[5908]

2.2.3-11 Easy Return to Base-Level Functions
If the functions assigned to a set of keys change as a result of user selection, the user should be provided with an easy means to return to the initial, base-level functions.
Additional Information: In effect, multifunction keys can provide hierarchic levels of options much like menu selection dialogues, with the same need for rapid return to the highest-level menu. For some applications, it may be desirable to automate the return to base-level assignment of multifunction keys, to occur immediately on completion of a transaction and/or by time-out following a period of user inaction.[5908]

2.2.3-12 Feedback for Function Key Activation
When function key activation does not result in any immediately observable natural response, users should be provided with some other form of computer acknowledgment.
Additional Information: Temporary illumination of the function key will suffice, if key illumination is not used for other purposes such as indicating available options. Otherwise, an advisory message should be displayed.[5908]

2.2.3-13 Disabling Unneeded Function Keys
Function keys that are not needed for a current transaction should be temporarily disabled.
Additional Information: Users should not be required to apply mechanical overlays to indicate that functions are not to be used. If a user selects a function key that is invalid for the current transaction, no action should result except display of an advisory message indicating what functions are available at that point.[5908]

2.2.3-14 Indicating Active Function Keys

If some function keys are active and some are not, the current subset of active keys should be indicated in some noticeable way, such as by brighter illumination.
Additional Information: This practice will speed user selection of function keys.[5908]

2.2.3-15 Response to Inappropriate Function Key Input

The system should prompt the user for confirmation if a function key is pressed in a context unrelated to the function.
Additional Information: The function should not be executed unless the action is confirmed.[5908]

2.2.3-16 Layout Compatible with Use

The layout of function keys should be compatible with their use.
Additional Information: Key arrangement should reflect the general principles of organization, such as importance, frequency, and order of use. For example, keys for emergency functions should be given a prominent location.[6546]

2.2.4-1 User Definition of Macro Commands

Users should be allowed to assign a single name to a defined series of entries, and then to use that named "macro" for subsequent command entry.
Additional Information: In this way, users can make frequently required but complicated tasks easier to accomplish, when the interface designer has failed to anticipate a particular need. The system should not accept a user designated macro name that is the same as an existing command name.[5908]

2.2.4-2 Index of Macros

Users should have access to an index of their macros and programmable function keys with their respective composition of commands.
Additional Information: Users should have a means of providing a list of their macro names and functions to other users with whom they will communicate.[5908]

2.2.4-3 Limiting User-Definable Macros and Programmable Keys

The use of user definable macros and programmable function keys should be limited.
Additional Information: The advantages may outweigh the disadvantages for some tasks (e.g., software development or modification), whereas for other tasks (e.g., application specific software) the disadvantages may outweigh the advantages.[5908]

2.2.4-4 Modification of Defined Macros

A user should be restricted from modifying a macro or programmable function key as defined by a different originating user.[5908]

2.2.4-5 No Duplication of Macro Names

Users should not be allowed to duplicate macro names.
Additional Information: An error message should be provided if the user attempts to assign a previously used name to a macro.[5908]

2.2.5-1 Form Filling for Command Entry

Form filling should be provided as an aid for composing complex command entries.
Additional Information: For example, for a complex data retrieval request, a displayed form might indicate the various parameters that could be specified. For a print request, a displayed form might help a user invoke the various format options that are available.[5908]

2.2.5-2 Defaults for Command Entry

Appropriate and readily modified default parameters should be displayed in forms used for composing complex command entries.
Additional Information: Default parameters permit users to compose potentially complicated entries by relatively simple actions. If defaults have been defined, they should be indicated to users. A displayed form permits a user to review (and confirm or change) default values, just as a user might review displayed defaults for data entry. When only a few parameters are involved, it may be feasible simply to prompt users with guidance messages rather than by displaying a form.[5908]

2.2.5-3 Consistent Format for Command Forms

Forms for command entry should be consistent in format.
Additional Information: The design of such forms should generally conform to guidelines for the design of information entry forms.[5908]

2.2.5-4 Forms for Information Entry

Form filling should be used for tasks where some flexibility in information entry is needed, such as the inclusion of optional as well as required items, and/or where computer response may be slow.[5908]

2.2.5-5 Grouping Data Fields

Where no source documents or forms exist to support information entry, then fields should be logically grouped, by sequence and frequency of use, importance, and functional associations.[5908]

2.2.5-6 Combined Entry of Related Data

Just one explicit entry action at the end of the transaction sequence should be required, rather than separate entry of each item.
Additional Information: Depending on form design, this practice might involve entering the entire form, or entry by page or section of a longer form. Form design should indicate to users just where explicit entry is required. Single entry of grouped data will generally permit faster input than item-by-item entry, and should prove more accurate as well. This practice permits user review and possible data correction prior to entry, and also helps the user understand at what point grouped data are processed. It will also permit efficient cross validation of related data items by the computer.[5908]

2.2.5-7 Data Field Labels

For each data field, an associated label should be displayed to help users understand what entries can be made.[5908]

2.2.5-8 Minimal Use of Delimiters

Whenever possible, entry of multiple data items should be allowed without keying special separator or delimiter characters.

Additional Information: Formatting characters such as hyphens should be provided by the system. This can be accomplished either by keying into predefined entry fields or by separating sequentially keyed items with blank spaces. In this context, tabbing from field to field is not considered to be keying a special delimiter character. When data items contain internal blanks, the entry fields with a predefined structure should be designed so that users will not have to key any internal delimiters.[5908]

2.2.5-9 Standard Delimiter Character
When a field delimiter must be used for data entry, a standard character should be employed consistently for that purpose.
Additional Information: A special delimiter character that does not require shift keying should be used. A character that does not occur as part of any data entry (except possibly for entry of running text where its occurrence would not be ambiguous) should be used. For example, a slash (/) may be a good choice.[5908]

2.2.5-10 Flexible Interrupt
When multiple data items are entered as a single transaction, as in form filling, the user should be allowed to review, modify, or cancel the items before entering the form.[5908]

2.2.5-11 Deferring Input of Information
When entry of information in a field is deferred or omitted, the system should identify the field by highlighting or other means. Before the information is filed or accessed, the user should be reminded that information has not been entered.[5908]

2.2.5-12 Use of Tabular Displays
When sets of data items must be entered sequentially, in a repetitive series, a tabular display format should be provided where data sets can be keyed row by row.
Additional Information: Row-by-row entry facilitates comparison of related data items, and permits potential use of a DITTO key for easy duplication of repeated entries. When the items in each data set exceed the capacity of a single row, tabular entry will usually not be desirable, unless there is a simple means for horizontal scrolling.[5908]

2.2.5-13 Distinctive Label Formats
Distinctive formats should be provided for column headers and row labels, so that users can distinguish them from data entries.[5908]

2.2.5-14 Aiding Entry of Duplicated Data
For entry of tabular data, when entries are frequently repeated, users should be provided with some easy means to copy duplicated data.
Additional Information: For example, a DITTO capability will speed data entry, and should prove more accurate than requiring users to rekey duplicated data.[5908]

2.2.5-15 Tabbing to Advance to Subsequent Fields
Where the number of fields is limited, screen traversal distances are short, and when data fields will be accessed sequentially, users should be allowed to tab directly from one data field to the next, so that the cursor can move freely back and forth across rows or columns.[5908]

2.2.5-16 Direct Pointing Devices for Selecting Fields
Direct pointing devices, such as a mouse or light pen, should be available (1) for selecting fields in complicated forms, or (2) when field entry will be less predictable (as in database update).

Additional Information: When input is not predictably structured, it may be preferable to move among fields by direct pointing rather than tabbing.[5908]

2.2.5-17 Row Scanning Cues
For long forms, those with many rows, some extra visual cue should be provided to help a user scan a row accurately across columns.
Additional Information: Visual aids for scanning rows are probably needed more when a user is reviewing and changing displayed data than for initial data entry. Such aids should be provided consistently, however, so that display formats for both data entry and review will be compatible. For example, a blank line might be inserted after every fifth row, or dots might be placed between columns in every fifth row. As an alternative, a displayed ruler that a user can move from one row to another may be used.[5908]

2.2.5-18 Providing Default Information
If certain information is used frequently, then it should be automatically entered into the form as a default.[6546]

2.2.6-1 When to Use Direct Manipulation

Direct manipulation should be used primarily in tasks with actions and objects that lend themselves to pictographic representation, and in which the actions and objects need not be modified for the successful interpretation of the command by the system.

Additional Information: In command entry by direct manipulation, the techniques for selecting and moving displayed objects would be similar to those described in guidelines for graphic data entry. For example, rather than compose a command or select a function key to file a document, a user might move a displayed icon representing the document to superimpose it on another icon representing a file. An extension of this idea is the use of "embedded menus" in which various items within a working display are highlighted in some way to indicate that they can be selected to obtain further information.[5908]

2.2.6-2 Pointing

When user input involves frequent pointing on a display surface, the interface should be designed so that other actions (e.g., display control) are also accomplished by pointing, in order to minimize shifts from one entry device to another.

Additional Information: This recommendation implies extensive use of menus in the margins of a graphic display to permit direct selection of control options by pointing. If screen capacity is too limited to permit simultaneous display of both graphic data and menus, then the designer might provide temporary superposition of menu windows on displayed data, or might provide some separate display device to show current options for control entry. Control entry via keyboard and/or function keys will be less satisfactory. If pointing is performed on some separate input device, such as a stylus on a digitizing tablet, then associated control actions should also be implemented via that device. For graphics software, a pointing action by a user can accomplish several different logical functions: specifying a displayed element ("pick" function); selecting a system-defined object, attribute, or action ("button" or "choice" function); or indicating a location in the conceptual drawing space ("locator" function). A designer must distinguish among these functions, although most users will not. Alphabetic entry for titles, labels, and other annotation of graphic displays will be accomplished more quickly by conventional keyboard input than by pointing.[5908]

2.2.6-3 Highlighting the Selected Item

Selection of an icon, menu, or application-specific capability from a function area should be acknowledged by highlighting the selected item.[5908]

2.2.6-4 Other Features of the Direct Manipulation Interface

The direct manipulation interface should include (1) windows for containing the data files, (2) menus for additional objects and actions that are not easily represented by pictographic icons.[5908]

2.2.6-5 Fast Computer Response with Direct Manipulation

Direct manipulation should not be used when the computer response is slow.

Additional Information: Other modes of interaction should be considered if the system is unable to respond immediately (i.e., within 0.25 second) to direct manipulation input.[5908]

2.2.6-6 Supplementary Text Labels

If icons are used to represent control actions in menus, a text label should be displayed with each icon to help assure that its intended meaning will be understood.

Additional Information: A redundant text label might help make the meaning clear to a user who is uncertain just what a displayed icon means.[5908]

2.2.6-7 Graphic Display of Control Context
Graphic means should be provided for displaying the context of current control actions to users.
Additional Information: A graphic representation of the currently selected values of functions, elements, and attributes affecting control actions might help reduce user errors in command entry. Graphic techniques might be used to display the scope of a proposed control action, such as outlining a group of display elements that will be affected by the action.[5908]

2.2.6-8 Graphic Display of Control Prompting
Prompting aids and other guidance pertaining to current control actions should be displayed graphically to the user.
Additional Information: A graphic representation of keypad layout with notes explaining the various key functions might help a novice user to learn the control options available via function keys. A graphic representation of logical combinations specified in query formulation might help reduce errors in the use of query language.[5908]

2.2.6-9 'Opening' an Icon
A user should be able to "open" an icon with a simple, explicit action.
Additional Information: The action or information represented by an icon is invoked or accessed by "opening" the icon. This should involve two steps: (1) indicating the object or action to be selected (e.g., moving a pointing cursor or other follower to an icon or function area) and (2) invoking the function through the performance of a specific, well-defined selection action, e.g., a "double click" on the cursor control device button. Note: A "double click" is defined by two clicks within 700 milliseconds of each other.[5908]

2.2.6-10 Size of Icons
Items on the screen that are displayed for selection should be a minimum of 0.2 inch (5 millimeters) on a side and separated by at least 0.1 inch (3 millimeters).[5908]

2.2.6-11 Text Selection Area
When functions are represented by text labels, a large area for pointing should be provided, including the area of the displayed label, plus a half-character distance around the label.[5908]

2.2.6-12 Zooming for Precise Positioning
When data entry requires exact placement of graphic elements, users should be allowed to request expansion of the critical display area ("zooming") to make the positioning task easier.[5908]

2.2.6-13 Selecting Graphic Elements
Users should be provided some means for designating and selecting displayed graphic elements for manipulation.
Additional Information: Users should have a means of indicating groups of elements (or parts of a complex element) to which an action will be applied. For example, designation might be by pointing, in the case of a discrete element, or might require some sort of outlining action to delineate portions of a complex figure.[5908]

2.2.6-14 Highlighting Selected Elements
All items currently selected should be highlighted in some way so that the user can anticipate the consequences of any proposed action.
Additional Information: A dotted border might be displayed around a selected element, or perhaps a selected element might be displayed with video inversion to distinguish it from other elements.[5908]

2.2.6-15 Displaying Current Attributes
During graphic data entry/editing, the selected attributes that will affect current actions should be displayed for ready reference by the user.
Additional Information: Users may forget what options have been chosen. Displayed reminders will be particularly important in situations where the consequences of a mistaken user action are difficult to reverse, e.g., where it may be hard to erase an incorrectly drawn line. For example, when graphic attributes -- plotting symbols, character size, line type, or color -- are chosen from displayed menus, it might suffice to highlight the currently selected menu options; alternatively, current selections might be shown in some sort of "reminder" window. A few attributes might be shown by the displayed cursor, i.e., by changing cursor shape, size, or color depending upon current attribute selections. If rubberbanding is provided to aid line drawing, then that process itself would show the currently selected line type. In some applications, display cues may not be adequate to convey attribute information completely. There may not be sufficient room on the display, or the attributes may derive from underlying models whose characteristics are too complex for simple display representation. In such cases, users should be able to request auxiliary display of such information to determine the operative context for current actions.[5908]

2.2.6-16 Automatic Data Registration
Automatic registration or alignment of computer-generated graphic data should be provided, so that variable data are shown properly with respect to fixed background or map data at any display scale.
Additional Information: The computer-prompted registration procedures required when devices such as graphics tablets are used to enter data are often error-prone. The design should therefore either permit direct entry of properly registered data on the display surface or have an accurate and easy-to-use registration procedure.[5908]

2.2.6-17 Automated Data Plotting
When complex graphic data must be entered quickly, computer aids should be provided to automate that process.
Additional Information: Users can create simple graphics or edit stored graphic material fairly quickly, but creating complex graphic displays takes more time. A variety of computer aids can be provided to help enter graphic data. For example, entry of detailed drawings and/or photographic imagery can be accomplished via a video camera and high-resolution digitizer, with facilities provided for a user to edit the result.[5908]

2.2.6-18 Plotting Stored Data
Automated plotting of computer-stored data should be provided at user request, with provision for subsequent editing by a user.

Additional Information: In many applications, data intended for graphic display will already be stored in the computer. In such cases, a user might specify the graphic format required (e.g., a line graph, or, for three-dimensional data, an XYZ plot), and edit elements in the resulting display output, without actually having to re-enter the data. When users do have to enter data for graphic display, they might choose form filling or tabular entry for efficiency in the initial input of data and then invoke graphic capabilities for subsequent data editing. In either case, it is important that previously entered data should be accessible for graphic processing.[5908]

2.2.6-19 Predefined Graphic Formats
When graphic data must be plotted in predefined standard formats, templates or skeletal displays for those formats should be provided to aid data entry.
Additional Information: In many applications, it may help to provide flexibility so that general prestored formats can be modified by a user and then saved for subsequent use. For example, sample displays might be stored in the computer to aid in creating standard graphs such as bar graphs, or standard diagrams such as organization charts, or page layouts for typesetting, or maps drawn to different scales or with different projections.[5908]

2.2.6-20 Aids for Graph Construction
When graphs must be constructed for data plotting, computer aids should be provided for that purpose.
Additional Information: Construction aids might include stored templates of different kinds of graphs, prompts to guide users in the definition of scale axes, and aids for format control such as automatic centering of axis labels if requested by a user. Computer aids for graph construction should be designed to allow flexibility in their use. A user should be allowed to position labels and other graphic elements at will, except where operational requirements may impose fixed formats.[5908]

2.2.6-21 Aids for Scaling
Computer aids should be provided to help users specify appropriate scales for graphic data entry.
Additional Information: The computer should handle scaling automatically, subject to review and change by a user. The computer might provide a general template for the plotting scale and prompt the user as necessary to define the scale more exactly, including specification of the origin, linear or logarithmic axes, scale intervals, minimum and maximum values, and labels for axes. In the process of defining scales, the computer might impose rules to ensure that the resulting graphic displays are designed to permit effective information assimilation by their users, e.g., displaying scales with conventional direction, so that numbers increase in value from left to right, or from bottom to top.[5908]

2.2.6-22 Grouping Elements
Users should be allowed to designate a group of elements to which graphic editing operations will be applied in common.
Additional Information: For example, a user might carefully position two elements with respect to each other, and then wish to move both of them together while preserving their relative positions. Grouping elements might be a temporary action, intended for just a few successive editing operations, or it might be specified more permanently via some sort of "make group" command.[5908]

2.2.6-23 Immediate Effect of Direct Actions
The effects of operations performed on direct manipulation interfaces should be immediately visible.
Additional Information: Immediate responses to actions are essential to the user having a sense of acting on the objects of the task domain themselves, rather than upon a representation of the objects through some intermediary.[6546]

2.2.6-24 Explicit Messages for Errors Related to Processes

Explicit error messages should be provided for incorrect actions related to the process (as opposed to the interface).

Additional Information: In some cases, error messages may not be needed in direct manipulation interfaces because results of actions are immediately visible or because some types of errors may be eliminated. However, the design strategy of relying on the ability of users to detect errors from the behavior of the user interface, rather than providing error messages, has some potential problems. Direct manipulation interfaces have their own problems, which may lead to new types of errors. Some of these errors may be difficult to detect if they are legal operations with respect to the user interface but undesirable actions with respect to the task domain (e.g., plant operation).[6546]

2.2.6-25 Meaning of Icons

Representations used as icons should require minimal interpretation.[6546]

2.2.7-1 Use of Natural Language Interface

A natural language interface should not be the sole means of taking actions that may have to be done very quickly or reliably.[6546]

2.2.7-2 Output of Natural Language System

The outputs of a natural language system should be consistent with the types of entries required of users.
Additional Information: Users of natural language interfaces may model their entries after the system's outputs.[6546]

2.2.8-1 Natural Organization of Data

A query language should reflect a single, natural data structure or organization.
Additional Information: The query language should be congruent with the user's perception of how the data are organized. For example, if a user supposes that all data about a particular person are stored in one place, then the query language should permit such data to be retrieved by a single query, even though actual computer storage might carry the various data in different files.[5908]

2.2.8-2 Task-Oriented Wording

The wording of a query should simply specify what data are requested.
Additional Information: A user should not have to tell the computer how to find the data. This objective has been called "nonprocedurality," meaning that a user should not have to understand computer procedures for finding data.[5908]

2.2.8-3 Flexible Query Formulation

Users should be allowed to employ alternative forms when composing queries, corresponding to common alternatives in natural language.
Additional Information: There are typically a number of equally precise ways of specifying a given condition. Therefore, when quantifying a query, a user should be able to employ equivalent forms, such as "over 50," "more than 50," or "51 or more."[5908]

2.2.8-4 Minimal Need for Quantifiers

A query language should minimize the need for quantifiers in query formulation.
Additional Information: People have difficulty in using quantifiers. Negative quantifiers ("no," "none," or "zero") are particularly difficult for users to deal with. Other potentially confusing quantifiers include indefinite ("some" or "any") and interrogative ("how many") forms. If a query language does require quantifiers, it may be helpful to allow a user to select the desired quantifier from a set of sample queries worded to maximize their distinctiveness.[5908]

2.2.8-5 Logic to Link Queries

A query language should include logic elements that permit users to link sequential queries as a single entry.
Additional Information: Common links for query formulation include 'and' and 'or.' However, a query language should be designed so that it does not require logical links. Some logical quantifiers ('greater than' or 'less than') may confuse users.[5908]

2.2.8-6 Confirming Large-Scale Retrieval

If a query will result in a large-scale data retrieval, the user should be informed and required to confirm the transaction or to narrow the query before processing.
Additional Information: In this regard, it may be helpful to permit a user to set some upper bound for data output, in effect to define what constitutes a "large-scale" retrieval. It may help a user to decide whether to confirm or modify a pending query, if the user can request a partial display of the currently specified data output.[5908]

2.2.8-7 Use of Query Language Interface

A query language interface should not be the sole means of taking actions that may have to be done very quickly or reliably.

2 USER-INTERFACE INTERACTION AND MANAGEMENT
2.2 User Input Formats
2.2.8 Query Language

Additional Information: Query language dialogues are usually used for retrieving data from databases and, as a result, may have fewer applications in NPPs than other interaction formats that may be used for a broader range of activities. The use of query languages can be a difficult task since users must apply a specially developed grammar to construct queries. Consequently, query languages have decreased in popularity as human-computer interfaces for non-programmers. Other types of user interfaces, such as menus and direct manipulation interfaces, are considered easier to use.[6546]

2.2.9-1 Request for Information
The system should provide the user with a specific request for information.[5908]

2.2.9-2 Questions Displayed Singly
Each question should be displayed separately.
Additional Information: Users should not be required to answer several questions at once. A user may become confused in trying to deal with several questions at once, particularly if the number of questions is variable from one transaction to another.[5908]

2.2.9-3 Stacking Related Questions
The system should be able to stack questions and their associated answers if a series of questions are concerned with the same topic.[5908]

2.2.9-4 Constraints on Answer Should Be Indicated
The system should indicate any constraints that apply to the user's response.
Additional Information: For example, if the only answer that the system would accept were a percentage, the question should be followed by "(%)". The answer area should follow the contextual information.[5908]

2.2.9-5 Unlimited Room for Answers
The system should accept as much data as the user is willing to provide in an answer.
Additional Information: If the information that the system requests is constrained, a data form should be used.[5908]

2.2.9-6 Recapitulating Prior Answers
When a series of computer-posed question are interrelated, answers to previous questions should be displayed when those will provide context to help a user answer the current question.
Additional Information: Another way to request a related series of user entries is to use a form-filling dialogue rather than question-and-answer.[5908]

2.2.9-7 Removing and Recalling Questions
The user should have the ability to remove a question and answer from the screen or recall a question and answer to the screen.[5908]

2.2.9-8 Sequence Compatible with Source Documents
When questions prompt entry of data from a source document, the question sequence should match the data sequence in the source document.[5908]

2.2.9-9 Question Mark Delimiter
A question mark should be the delimiter of the question and answer dialogue.
Additional Information: In general, space for answering the question should be provided closely following the question mark. However, when additional information needed for the answer follows the question, the space for answering the question should be placed after the additional information.[5908]

2.2.10-1 Speech Input

Spoken input should be used only when entry cannot be accomplished through more reliable methods such as keyed entry or pointing.

Additional Information: Current speech recognition devices are not well developed and tend to be error prone. Thus, there should be some good reason for choosing speech input over more conventional data entry methods. Speech input might be appropriate if a user cannot use his/her hands for some reason.[5908]

2.2.10-2 Limited Vocabulary for Speech Input

The vocabulary used for spoken input should be constructed so that only a few options are needed for any transaction.

Additional Information: To increase the likelihood that a user's valid entries are correctly identified by the system, the user's vocabulary should be predictable. This does not necessarily mean that the vocabulary must be small, though recognition systems that can only accommodate small vocabularies are more prevalent and less expensive. A vocabulary is predictable when a user's choice of inputs at any given time is small, so that the system will be more likely to make a correct match in interpreting an entry.[5908]

2.2.10-3 Feedback and Error Correction for Speech Input

Feedback and simple error correction procedures should be provided for speech input, so that when a spoken entry has not been correctly recognized by the computer, the user can cancel that entry and speak again.

Additional Information: Simple error correction is particularly important with spoken input, since speech recognition systems are prone to error except under carefully controlled conditions.[5908]

2.2.10-4 Alternative Entries for Speech Input

When speech input is the only form of input available, alternatives forms for critical entries should be allowed, so that if the system cannot recognize an entry after repeated attempts, another entry form can be substituted.

Additional Information: Because speech recognition systems are affected by normal variations in a user's voice, and by changes in the acoustic environment, a spoken entry that was accepted yesterday might not be accepted today. Thus, for important entries a user should be able to use an alternative word. For example, "Exit" might be defined as an acceptable substitute for "Finished." Spelling a word letter-by-letter is not an acceptable alternative, since speech recognition systems may have trouble correctly identifying similar sounding letters.[5908]

2.2.10-5 Activation and Deactivation

Speech recognition systems should have an external, non-speech means of activation and deactivation (e.g., PAUSE and CONTINUE options) so that conversation between users is not taken as command input.

Additional Information: If possible, a standby mode should be provided from which spoken commands to activate/deactivate may be invoked. External, non-speech means of activation and deactivation can include use of a keyboard.[5908]

2.2.10-6 Vocabulary Items

The vocabulary items should (1) consist of words that are meaningful and familiar to the user, (2) be phonetically distinct from one another; and (3) consist of 2-5 syllables.

Additional Information: Items of 2-5 syllables in length are generally better recognized than one-syllable items.[5908]

2.2.10-7 Vocabulary Sets
Application vocabularies should be divided into sets based on the hierarchy of the application and recognition accuracy requirements.
Additional Information: This improves recognition by reducing the number of choices that the system has to evaluate.[5908]

2.2.10-8 Testing the Recognition of Individual Vocabulary Items
The user should be able to test the recognition of any individual vocabulary item without the entire interactive system being on-line. Feedback on the word recognized and the corresponding confidence score should be available immediately after each use of a word.[5908]

2.2.10-9 User-Adjustable Features
When the consequences of errors are not significant, the speech amplitude and rejection levels required for input should be user-adjustable.[5908]

2.2.10-10 Word Boundaries
Where word boundaries (pauses between words) are required for system interpretation, boundaries of 100 milliseconds or more should be allowed by the system.[5908]

2.2.10-11 Confidence Rating
An indication of the similarity of each spoken command to the recorded template should be available to the user.[5908]

2.2.10-12 Speaker-Dependent Voice Recognizer
If an application functions with a speaker-dependent voice recognizer, the user should be able to retrain or update any or all vocabulary templates at any time.
Additional Information: A user's voice changes over time, even in the course of an hour of continuous use. Several factors have the ability to alter the voice temporarily. To maintain good performance under these conditions, the user must have the ability to modify the template set.[5908]

2.3.1-1 Distinctive Cursor

Cursors should have distinctive visual features (shape, blink, or other means of highlighting).
Additional Information: A cursor is the most immediate and continuously available form of user guidance, since it will generally mark the current focus of user attention. Different cursor formats may denote different operational conditions. If that is done, each of those different cursors should be distinctive from other displayed items, and from each other. An underscore cursor would be difficult to see on a display of underscored text, or on a graphical display containing many other lines. If multiple cursors are used on the same display (e.g., one for alphanumeric entry and one for line drawing), then each cursor should be distinguishable from the others.[5908]

2.3.1-2 Display of Cursor

The cursor should not move beyond the display boundaries or disappear from sight.[5908]

2.3.1-3 Non-Distracting Design

The cursor should not be so distracting as to impair the searching of the display for information unrelated to the cursor.[5908]

2.3.1-4 Stable Cursor

The displayed cursor should be stable.
Additional Information: The cursor should remain where it is placed until moved by the user (or by the computer) to another position. The intent of the recommendation here is to avoid unwanted "drift." Some special applications, such as aided tracking, may benefit from computer-controlled cursor movement.[5908]

2.3.1-5 Initial Cursor Placement

On the initial appearance of a data entry display, the cursor should appear automatically at some consistent and useful location.
Additional Information: In a form-filling display, the cursor should be placed in the first entry field. When menu selection is by pointing, the system should place the cursor automatically at the first listed option. When menu selection is by code entry, the cursor should be automatically placed in the command entry area.[5908]

2.3.1-6 Consistent HOME Position

When there is a predefined HOME position for the cursor, that position should be consistently defined on all displays of a given type.
Additional Information: The HOME position of the cursor should also be consistent in the different "windows" or sections of a partitioned display. For example, HOME might be in the upper left corner of a text display, or at the first field in a form-filling display, or at the center of a graphic display.[5908]

2.3.1-7 Automatic Return of Cursor

When the user must repeatedly return the cursor to the origin or other specific screen location, automatic return or repositioning of the cursor should be provided.[5908]

2.3.2-1 Cursor Control – General

The user should be able to adjust the sensitivity of the cursor movement to be compatible with the required task and user skills.[5908]

2.3.2-2 Compatible Control of Cursor Movement

Control actions for cursor positioning should be compatible with movements of the displayed cursor, in terms of control function and labeling.
Additional Information: For cursor control by key action, a key labeled with a left-pointing arrow should move the cursor leftward on the display. For cursor control by joystick, leftward movement of the control (or leftward pressure) should result in leftward movement of the cursor.[5908]

2.3.2-3 Easy Cursor Positioning

Users should be provided with an easy, accurate means of positioning a displayed cursor to point at different display elements and/or display locations.
Additional Information: Cursor positioning is a frequent user action during graphic data entry. An easy means for controlling cursor movement is essential for efficient performance.[5908]

2.3.2-4 Consistent Positioning

Where cursor positioning is incremental by discrete steps, the step size of cursor movement should be consistent horizontally and vertically.[5908]

2.3.2-5 Cursor Control Key Functions

At the minimum, keys for cursor control should allow horizontal and vertical cursor movement.
Additional Information: Ideally, keys for cursor control should allow both horizontal and vertical movement, and movement along the diagonals.[5908]

2.3.2-6 Cursor Control at Keyboard

When position designation is required in a task emphasizing keyed data entry, cursor control should be provided by some device integral to the keyboard (function keys, joystick, and trackball).
Additional Information: Separately manipulated devices (light pen or mouse) will tend to slow the user.[5908]

2.3.2-7 Location of Cursor Control Keys

If cursor movement is accomplished by depressing keys, the keys should be located on the main keyboard.[5908]

2.3.3-1 Cursor Movement
If the cursor is moved by depressing a key, releasing the key should cause the cursor to stop moving.[5908]

2.3.3-2 Responsive Cursor Control
The cursor control should permit both fast movement and accurate placement.
Additional Information: Ideally, when the user moves a pointing device, the displayed cursor should appear to move instantly. Rough positioning should take no more than 0.5 seconds for full screen traversal. Fine positioning may require incremental stepping of the cursor, or a control device incorporating a large control/display ratio for small displacements, or a selectable vernier mode of control use. For any given cursor control action, the rate of cursor movement should be constant, i.e., should not change with time. Slow visual feedback of cursor movement can be particularly irritating when a user is repeatedly pressing a cursor control key, or perhaps holding the key down. In that case, slow feedback may cause the user to misjudge location and move the cursor too far.[5908]

2.3.3-3 Precise Pointing
When fine accuracy of positioning is required, as in some forms of graphic interaction, the displayed cursor should include a point designation feature.
Additional Information: A cross may suffice (like cross-hairs in a telescope), or perhaps a notched or V-shaped symbol (like a gun sight). Precise pointing will also require a cursor control device capable of precise manipulation. Touch displays, for example, will not permit precise pointing.[5908]

2.3.3-4 Selectable Rate Aiding
The user should be able to turn rate aiding of the cursor movement on or off.
Additional Information: With rate aiding, the speed of follower movement is proportional to the speed of input movement. The default should be to have rate aiding off.[5908]

2.3.3-5 User Selectable Speed
Users should be able to select at least two speeds (normal and fast) for the movement of the cursor when the keys for cursor control are held down.[5908]

2.3.3-6 Variable Step Size
When character size is variable, the incremental cursor positioning should vary correspondingly, with a step size matching the size of currently selected characters.[5908]

2.3.3-7 Easy Cursor Movement to Data Fields
If a cursor must be positioned sequentially in predefined areas, such as displayed data entry fields, this should be accomplished by simple user action.
Additional Information: Automatic cursor advance is generally not desirable. Programmable tab keys are customarily used for this purpose.[5908]

2.3.3-8 Explicit Activation
Users should be required to take a separate, explicit action, distinct from cursor positioning, for the actual entry (enabling, activation) of a designated function.
Additional Information: This guideline may not apply to tasks in which rapid, continuous entry is required (e.g., line drawing or tracking).[5908]

2.3.3-9 Display Format Protection

When there are areas of a display in which data entries cannot be made (such as in field labels or in blank spaces that are part of data formatting), the cursor should 'step over' those areas, and they should be insensitive to pointing actions.

Additional Information: Automatic format protection will generally make cursor positioning easier for a user, since the cursor will not have to be stepped through blank areas, and much routine cursor control can be accomplished with only casual reference to the display. When a user may have to modify display formats, then this automatic format protection can be provided as a general default option subject to user override.[5908]

2.3.3-10 Free Cursor Movement

For text editing, users should be allowed to move the cursor freely over a displayed page of text to specify items for change, and to make changes directly to the text.

Additional Information: Free cursor movement and changes made directly to the text are characteristics usually associated with so-called screen-based editors and not associated with line- or command-based editors. Screen-based editors are preferred by users and are potentially more efficient.[5908]

2.3.3-11 Proportional Spacing

If proportional spacing is used for displayed text, computer logic should make necessary adjustments automatically when the cursor is being positioned for data entry or data change.

Additional Information: Without automatic computer aids, a user probably will not handle proportional spacing accurately.[5908]

2.3.3-12 Cursor Movement by Units of Text

Users should be able to move the cursor by specific units of text, as well as one character at a time.

Additional Information: Cursor positioning will be easier if appropriate function keys can be provided. A SENTENCE key that allows a user to move directly to the next displayed sentence will be more convenient than some double-keying logic such as CONTROL-S.[5908]

2.3.3-13 Data Entry Independent of Cursor Placement

An ENTER action for multiple data items should result in entry of all items, regardless of where the cursor is placed on the display.

Additional Information: A user may choose to move the cursor back to correct earlier data items, and may not move the cursor forward again. The computer should ignore cursor placement in such cases.[5908]

2.3.4-1 Minimal Use of Multiple Cursors

Multiple cursors on a single display should be used only when it can be demonstrated that they are required by the task.

Additional Information: Multiple cursors may confuse a user, and so require special consideration if used in interface design. Multiple cursors might be useful to mark a user's place when manipulating data in multiple display windows. In graphic interaction, one cursor might be used for line drawing and a different cursor for alphanumeric data entry (labels).[5908]

2.3.4-2 Multi Monitor/Multi Controller Cursor Characteristics

In a multitasking environment with multiple monitors, controllers, or cursors, the location of the active cursor should be obvious to the user.

Additional Information: If there are two pointing cursors, one on each of two monitors, the active cursor should be apparent to the user. If there is a single cursor that moves between two monitors, its path should be continuously trackable. As the cursor crosses from one monitor to the other, it should either maintain its vertical coordinate for side-by-side monitors and horizontal for stacked monitors, or should jump between uniquely specified locations on each screen.[5908]

2.3.4-3 Distinctive Multiple Cursors

If multiple cursors are used, they should be visually distinctive from one another.[5908]

2.3.4-4 Compatible Control of Multiple Cursors

If multiple cursors are controlled by different devices, their separate controls should be compatible in operation.

Additional Information: Assume that one cursor is moved upward on a display by forward motion of a joystick. Then a second cursor should also be moved upward by forward motion, perhaps by forward motion of a second joystick or by forward motion of a trackball or other device.[5908]

2.3.4-5 Distinctive Control of Multiple Cursors

When multiple cursors are controlled by a single device, the cursor currently being controlled should be clearly indicated.[5908]

2.3.4-6 Multiple Pointing Cursor Control Devices

When there are multiple cursor control/pointing devices, a unique pointing cursor shape should be associated with each device.[5908]

2.3.4-7 Unique Shapes

Cursors of different shapes should be used for different purposes.

Additional Information: The shape of a cursor should reflect the state of the system or processing mode. A specific cursor should be uniquely assigned to a specific purpose to provide state or mode information to the user. A straight line cursor might be used as the placeholder cursor to indicate entry position in a word processing task, an arrow might be used as a pointing cursor to indicate screen structures, and an X-shaped pointing cursor might be used when the user cannot interact with the system. Within this general framework, the number of cursor shapes used should be kept to a minimum.[5908]

2.3.5-1 Pointing Cursor Visibility

The pointing cursor should be visible to the user at all times and may obscure characters unless it interferes with performance within an application.
Additional Information: To maintain pointing cursor quality, the cursor should obscure other characters, not vice versa.[5908]

2.3.5-2 Pointing Cursor Blink

The pointing cursor should not blink.[5908]

2.3.5-3 Pointing Cursor Image Quality

Pointing cursors should maintain image quality throughout an entire range of motion within the display. The position of the pointing cursor should be clearly visible during movement from one screen position to another. Flicker should be minimized.[5908]

2.3.5-4 Pointing Cursor Design

To the greatest degree possible, pointing cursors should be completely graphic and should not contain a label.[5908]

2.3.5-5 Pointing Cursor Size Constancy

The pointing cursor should maintain its size across all screen and display locations.[5908]

2.3.5-6 Pointing Cursor Movement

The movement of the pointing cursor should appear to the user to be smooth and continuous, with smooth and continuous movement of the cursor control device. The pointing cursor should not move in the absence of any input from the user.[5908]

2.3.6-1 Text Entry Cursor Visibility

The text entry cursor should only be visible when text entry is possible.[5908]

2.3.6-2 Identification of Text Entry Cursor

At the initiation of a task, an application, or a new display, the user should be able to immediately determine the location of the text entry cursor. Following the initial placement of the text entry cursor, the position of the cursor should be under the user's control.
Additional Information: For example, the cursor might be placed initially at the first data field in a data form, at the upper left corner of a blank display in a word processing task, and immediately following the last character of a word processing display containing alphanumeric characters.[5908]

2.3.6-3 Text Entry Cursor Blink

If text entry cursor blinking is to be used to direct the user's attention, the default blink rate should be 3 Hz.
Additional Information: A blinking cursor need not obscure characters. For example, the blinking cursor may be an underline that does not cover the entire character.[5908]

2.3.6-4 Nonobscuring Text Entry Cursor

The placeholding cursor should not obscure any other character displayed in the position designated by the cursor.
Additional Information: As an example, a block cursor might employ brightness inversion ("reverse video").[5908]

2.3.6-5 Number of Text Entry Cursors

There should be only one text entry cursor per window.[5908]

2.3.6-6 Text Entry Cursor Size

The text entry cursor should assume the height and/or width of the text characters adjacent to it.[5908]

2.3.7-1 Cursor Motion Across Contiguous Similar Displays

When displays are the same size and are located adjacent to each other, the cursor should appear to move in a smooth, continuous motion from one display device to the next.[6546]

2.3.7-2 Cursor Motion Across Physically Separated Dissimilar Displays

When display devices are physically separated, have different orientations, or different sizes, techniques should be employed to help the user keep track of the cursor's position.

Additional Information: When display devices are physically separated or dissimilar the cursor motion between them may not be perceptually smooth. That is, the user must translate motion on one display into a different motion in the other or follow the cursor as it 'jumps' across the space separating the displays. These factors may cause the user to lose track of the cursor's location. Various techniques can be used to support the user in following the cursor motion between display screens. The cursor can be made to always enter the other display at a uniquely specified entry point. This method allows the user to anticipate the cursor's location on the other display, which may reduce the time associated with finding it. However, the user must first locate the specified entry point. When display screens have different proportions of height and width, then the user may have difficulty understanding how the cursor position on the edge of one display screen corresponds to a position on the other screen. In such cases, computational techniques can be applied that compensate for the differences in screen sizes to make cursor motion appear more continuous. Alternatively, the small-screen display might overlap a smaller portion of the large-screen display, such that a one-to-one relationship in cursor motion is maintained.[6546]

2.4.1-1 Prompting User Entries

Users should be provided with clear and specific information to guide entries during logon/logoff or command or information entry.
Additional Information: Prompts may be incorporated in a display and/or provided in response to requests for HELP. Where six or fewer control options exist, they should be listed. Where more input options exist, an example of the type of entry that is required should be presented. If a default value has been defined for null entry, that value should be included in the prompting information.[5908, 0700]

2.4.1-2 Prompting Address Entry

When a user must specify the address for a message, prompting should be provided.
Additional Information: Prompting might consist of a series of questions to be answered, an address form to be completed by the user, or reminders of command entries required.[5908]

2.4.1-3 Standard Symbol for Prompting Entry

Standard symbols should be used for input prompting.
Additional Information: The symbol(s) chosen should be reserved for that use.[5908]

2.4.1-4 Prompting Command Correction

When a command entry is not recognized or inappropriate, users should be prompted to correct, rather than re-enter the command.
Additional Information: A faulty command should be able to be retained in the command entry area of the display, with the cursor automatically positioned at the incorrect item, with an advisory message describing the problem. It should be possible for the user to correct individual errors without affecting adjacent valid entries.[5908, 0700]

2.4.1-5 Prompting Field Length

Cues should be provided to indicate the size of a fixed-length data entry field.
Additional Information: Underscoring gives a direct visual cue as to the number of characters to be entered, and the user does not have to count them. For example, "Enter ID: __ __ __ __ __ __ __ __ __" is preferable to "Enter ID (9 characters)."[5908]

2.4.1-6 Data Format Cuing in Labels

Additional cuing of data format should be included in a field label when that seems helpful.
Additional Information: For example, "DATE (MM/DD/YYYY) : __ __/__ __/__ __."[5908]

2.4.1-7 User-Requested Prompts

Users should be able to request computer generated prompts to determine required parameters or available options for a command.
Additional Information: Using a HELP function key, or perhaps simply keying a question mark in the command entry area, are satisfactory methods to request prompting.[5908]

2.4.1-8 Prompting Data Entry

Prompting should be provided for required formats and acceptable values for data entries.[5908]

2.4.1-9 Graphic Display of Control Prompting

Graphic means may be provided for displaying prompting aids and other guidance pertaining to current control actions.

2 USER-INTERFACE INTERACTION AND MANAGEMENT
2.4 System Response
2.4.1 Prompts

Additional Information: For example, a guidance display providing a graphic representation of keypad layout with notes explaining the various key functions can help a user to learn the control options available via function keys.[5908]

2.4.2-1 Feedback During Data Entry

Feedback should be displayed for all user actions during data entry; keyed entries should be displayed stroke by stroke.

Additional Information: For reasons of data protection, it may not be desirable to display passwords and other secure entries.[5908]

2.4.2-2 Feedback for Completion of Data Entry

The computer should acknowledge completion of a data entry transaction with a confirmation message if data entry was successful, or else with an error message.

Additional Information: Successful data entry should not be signaled merely by automatic erasure of entered data from the display, except possibly in the case of repetitive data entries. For single data entry transactions, it may be better if entered data is left on the display until the user takes an explicit action to clear the display.[5908]

2.4.2-3 Feedback for Repetitive Data Entries

For a repetitive data entry task that is accomplished as a continuing series of transactions, successful entry should be indicated by regenerating the data entry display, automatically removing the just-entered data in preparation for the next entry.

Additional Information: Automatic erasure of entered data represents an exception to the general principle of control by explicit user action. In addition to erasure of entered data, a message confirming successful data entry might be displayed. Such a message may reassure uncertain users, especially in system applications where computer performance is unreliable.[5908]

2.4.3-1 Response Time Appropriate to Transaction

The speed of computer response to user entries should be appropriate to the transaction involved.
Additional Information: Appropriate response times for selected activities are shown in Table 2.4. In general, the response should be faster for those transactions perceived by a user to be simple. For example, computer response to a likely control entry, such as NEXT PAGE, should be within 0.5 to 1.0 second; response to other simple entries should be within 2 seconds; error messages should be displayed within 2 seconds.[5908]

Table 2.4 Maximum and preferred system response times

User Activity		Response Time (sec) Maximum	Preferred
Control Activation (for example, keyboard entry, cursor controller movement)		0.10	< 0.10
System Activation (system initialization)		3.0	< 0.50
Request for given service:	Simple	2.0	< 0.25
	Complex	5.0	< 2.0
	Loading and Restart	15-60.0	< 6.0
Error Feedback (following completion of input)		2.0	< 0.25
Response to I.D.		2.0	< 0.25
Information on next procedure		< 5.0	< 2.0
Response to simple inquiry from list		2.0	< 0.25
Response to simple status inquiry		2.0	< 0.25
Response to complex inquiry in table form		2-4.0	< 0.25
Request for next page		0.5-1.0	< 0.25
Response to "execute problem"		< 15.0	< 6.0
Light pen entries		1.0	< 0.25
Drawings with light pens		0.1	< 0.10
Response to complex inquiry in graphic form		2-10.0	< 0.25
Response to dynamic modeling		---	---
Response to graphic manipulation		2.0	< 0.25
Response to user intervention in automatic process		4.0	< 1.50

2.4.3-2 Response Time Appropriate to Tasks

When information from different locations must be compared or mentally integrated, the system response time for information retrieval should be minimized.
Additional Information: The system response time for display navigation actions, such as selecting displays or zooming and panning within a display, contributes to the information access cost. Performance of mental integration tasks can be impaired when information access costs increase because mental resources are diverted to the information retrieval task. In addition, as system response time increases, the likelihood that information will be lost from working memory increases.[6546]

2.4.3-3 Display Average System Response Time
Average system response time, if affected by the number of on-line users, should be displayed at time of logon.
Additional Information: This message should not be in code but should contain specific information concerning current response time and the periods when response time is relatively quick (e.g., "Average response to simple commands is 10 to 15 seconds; system response time is usually 1 to 2 seconds between 1100 and 1200 and after 1600 hours").[5908]

2.4.3-4 Response Time Consistent with Requirements
System response times should be consistent with operational requirements.
Additional Information: Required user response times should be compatible with required system response time. Required user response times should be within the limits imposed by total user tasking expected in the operational environment.[5908]

2.4.3-5 Processing Delay
Where system overload or other system conditions will result in a processing delay, the system should acknowledge the data entry and provide an indication of the delay to the user.
Additional Information: If possible, the system should advise the user of the time remaining for the process or of the fraction of the process completed.[5908]

2.4.3-6 Indicating Completion of Processing
When processing in response to a control entry is lengthy, the user should be given a positive indication of subsequent completion time and appropriate related information.
Additional Information: Appropriate related information includes a message stating that further user action is required.[5908]

2.4.3-7 Response Time Induced Keyboard Lockout
If computer processing time requires delay of concurrent user inputs and no keyboard buffer is available, keyboard lockout should occur until the computer can accept the next transaction. An alert should be displayed to indicate to the user that lockout has occurred.[5908]

2.4.3-8 Keyboard Restoration
A signal should be presented when the computer is ready to continue following response time-induced keyboard lockout.
Additional Information: For example, the cursor changes back to its normal shape.[5908]

2.4.3-9 Variability of Response Time
Response time deviations should not exceed more than half the mean response time.
Additional Information: For example, if the mean response time is 4 seconds, the variation is limited to a range of 2 to 6 seconds.[5908]

2.4.3-10 Maximum System Response Times
Maximum system response times for real-time systems should not exceed the values presented in Table 2.4.[5908]

2.5.1.1-1 Organization of the Display Network
The organization of the display network should reflect an obvious logic based on task requirements and be readily understood by users.
Additional Information: The structure of the interface and its associated navigation aids should make it easy for users to recognize where they are in the data space and should enable them to get rapid access to data not currently visible (e.g., on other display pages). The way the system works and is structured should be clear to the user. One way of providing a logical, explicit structure for the display network is by providing a consistent hierarchical organization. When each major branch of the network has the same, corresponding set of descendant branches, users can apply their understanding of the layout of one branch to predict how information is organized in similar branches of the network.[6546]

2.5.1.1-2 Cues to Display Network Structure
The display system should provide information to support the user in understanding the display network structure.
Additional Information: By understanding how information is organized in the display network, the user is better able to determine where to look to find needed information. Examples of cues that support comprehension of network structure include: a view of the overall structure of the display network, navigational landmarks that identify key nodes of the network, and representations of the network that spatially distribute the nodes in a consistent, predictable manner. An information space that has no explicit structure is difficult, if not impossible, to search exhaustively. If an organized exhaustive search of the information space is to be attempted, an organizing structure must be imposed on it. An indication of structure such as a grid should be provided, especially when the space does not contain inherent regular features to define it.[6546]

2.5.1.1-3 Overview of Display Network
A display should be provided to show an overview of the structure of an information space, such as a display network or a large display page.
Additional Information: Overview displays can support visualizing portions of the organization that are not currently in view and help users to understand the relationships between current and target positions relative to each other and the overall organization. For example, the overview may depict the arrangement of a display network and important display pages within the network. Overview displays, as used in this context, should not be confused with displays that provide summarize important plant status information.[6546]

2.5.1.1-4 Perceptual Landmarks
Easily discernable features should appear in successive views and provide a frame of reference for establishing relationships across views.
Additional Information: Designers can support wayfinding in computer-based display systems by incorporating features that serve similar functions as the wayfinding features of the physical environment. For example, display networks divide the plant information into discernable places, such as individual displays. A display network is usually based on an underlying organizational principle (e.g., hierarchical, sequential, or relational). In graphical displays, major pieces of equipment, such as the reactor vessel or turbine, may serve as landmarks. Wayfinding may be enhanced when these organizational principles can be readily understood by the user.[6546]

2.5.1.1-5 Location Cues
Cues should be provided to help the user retain a sense of location within the information structure.

Additional Information: Hypertext-based information structures are often characterized by links that are based on conceptual relationships between the information content (relational links) rather than on structural relationships (e.g., relationships that result from a regular hierarchical structure). In such documents, the user can rely on the familiar structure of the document for orientation, instead of having an understanding of the link structure. For example, having arrived at a location from a conceptually related location elsewhere in a document, a user can relate the current location to the overall structure of the document by noting which volume, section, and subsection is currently accessed, even thought that hierarchy was not actually traversed.[6546]

2.5.1.1-6 Directional Cues
Directional cues should be provided.
Additional Information: If adequate directional cues are not provided, disorientation will result which will inhibit both wayfinding performance and the acquisition of representational knowledge.[6546]

2.5.1.1-7 Scales, axes, and grids
Scales, axes, and grids should be used for spatial representations (such as maps) that exceed a display page.
Additional Information: A scale is a graduated series of demarcations indicating the divisions of an axis. Axes are the graphical representation of orthogonal dimensions in the form of lines (e.g., horizontal and vertical axes). A grid is a network of uniformly spaced horizontal and vertical lines for locating points by means of coordinates. Grids may be applied to large displays to divide them into discrete sections, such as those used in geographical maps. If the grid uses a sequential coordinate system such as numbers or letters, then the user may use the coordinates of the current position to determine how much of the display structure lies in each direction around the current location. Grids are especially compatible with spatially organized information such as maps and mimic displays.[6546]

2.5.1.1-8 Display Page Titles and Identification Codes
Display page title and identifying information should be used to communicate the position of a display in a larger information space.
Additional Information: For example, if display pages are functionally related, their names may be designed to reflect this relationship. Some process control display systems assign a unique numerical or alphanumerical code to each display page. The coding scheme may include prefixes and suffixes to indicate relationships between displays. The prefix identifies the major branch of the menu system (e.g., a major plant system). The suffix indicates the level in the branch. For example, if a four-digit numerical coding scheme is used, the first digit may be used to indicate major branches (e.g., 1000, 2000, 3000), and the second digit to indicate the next lower level of branch (i.e., the second level of branches within the 2000 branch would be 2100, 2200, 2300). This pattern may continue for the remaining digits of the coding scheme.[6546]

2.5.1.1-9 Orientation Coding
Orientation coding, such as different background colors and patterns, may be applied to display pages to differentiate them from displays in other parts of the display network.[6546]

2.5.1.1-10 Display Overlap
There should be physical or functional overlaps between displays that prevent the displays from appearing as disjointed views.

Additional Information: To achieve physical overlap, some portions of a display page may be repeated on other displays. This overlap should include only those features needed to establish across-display relationships and to call attention to other data and display frames. Functional overlap may be achieved by providing pointers to data on related displays. For example, a flowchart or mimic display may include pointers to relevant items in other displays. As another example, displays that present the same plant data at different levels of abstraction can include functionally overlapping information that connects the displays.[6546]

2.5.1.1-11 Explicit Indication of Context
If the interpretation of displayed data depends on its context (i.e., the location in the display network), an explicit indication of the context should appear in the display.
Additional Information: Knowing one's location in the display network may not be necessary for accessing the next desired location, but it may be important for interpreting the displayed information.[6546]

2.5.1.1-12 Understanding Successive Views
A hypertext information system should show how a destination node is related to the point of departure.
Additional Information: Disorientation can occur when users do not understand the relationships between successive views of a display system. In hypertext-based information systems, disorientation can occur when making transitions between nodes of the information structure if the relationship between the information in the current and previous nodes is not clear. The basis for a link should be apparent to the user through explanatory text or graphical display techniques. Disorientation may also occur when looking at an overview display after making a transition between nodes. Successive views of the overview display may look quite different due to the complexity of the links between the nodes. For example, when a new node is selected, a new set of relational links may be presented in the overview display.[6546]

2.5.1.2-1 Flexibility in Display System Interaction
The display network should provide more than one way to access displays.
Additional Information: The range of methods available for interacting with the display network should not increase the level of mental workload of the user, such as through multiple methods that are inconsistent.[6546]

2.5.1.2-2 Minimal Navigation Path Distance
Short navigation paths should be provided between display pages that will be used one after the other.
Additional Information: Minimizing the navigation distance can reduce the amount of time that information must be held in working memory, thereby reducing cognitive demands on the user. One approach may be to provide broad, shallow menu structures rather than narrow, deep ones. However, the former may be impractical if the total number of menu items is large and the display devices have limited space for presenting them. In such cases, additional navigational mechanisms should be considered such as direct keyword retrieval. Other features for reducing navigation distance should be used such as navigation shortcuts (e.g., buttons for jumping to the top of the menu or major branches without accessing intermediate nodes) and buttons for accessing previous displays.[6546]

2.5.1.2-3 Short Navigational Distances in Hierarchies
Navigation distances should be kept short.
Additional Information: The interface should be designed to shorten although not necessarily minimize navigation distance. The main menu button is an example of a way to shorten the distance to the top of the menu. Offering direct access to display pages via entry of keywords may impose high cognitive demands when navigating large display networks. It may be more favorable as a supplemental navigation tool for experienced users for frequently accessed displays.[6546]

2.5.1.2-4 Relatedness of Successive Views
During navigation, displays should support users' comprehension of the relationships between successive views or destinations.
Additional Information: The central processing demands associated with the move may be greater when the current and target positions cannot be seen at the same time on the display page. In such cases, cognitive demands may be imposed for developing a mental representation of the display page and for determining the relationship between the starting and target locations. If the navigation moves proceed as a series of discrete steps, then additional demands may be imposed in developing an understanding of the relationships between each of these discrete views. These processing demands may interfere with the cognitive task involved with information integration.[6546]

2.5.1.2-5 Time to Complete Navigation
The time required to complete a display navigation action should be minimized.
Additional Information: Moving from one location to another on the display page requires time. It may be affected by such factors as the number of steps in a navigation move, the length of the navigation moves, and the display system's response time. As the length of time increases there is an increased likelihood that the information held in working memory will be lost. Therefore, the amount of time needed to complete a navigation move should be minimized. This may be accomplished by reducing the response time of the display system or reducing the number of actions required to complete a navigation move.[6546]

2.5.1.2-6 Detection of Navigation Targets
Navigation targets should be easily detectable.

Additional Information: When moving from one location to another on the display page, cognitive demands are imposed on perceptual processes for detecting the target information item. These demands may increase the amount of time required to complete the navigation move and, therefore, increase the likelihood that the information held in working memory will be lost. Therefore, the HSI should be designed to facilitate target detection. For example, the targets should be visually distinct from the background. In addition, the scrolling, panning, or zooming motions should be sufficiently slow when approaching the target so the user can recognize the target.[6546]

2.5.1.2-7 Lateral Moves in a Hierarchy
Users should be able to make lateral transitions among locations within a particular level of the site, rather than vertical transitions from the higher-level, central location.
Additional Information: This may be accomplished by using Next and Previous keys to sequentially access each of the locations at a particular level.[6546]

2.5.1.2-8 Simultaneous Display of Related Items
Users should be able to display related items so they may be viewed simultaneously.
Additional Information: If there is a large number of such items, the display may be too large to be viewed at one time and, consequently, will have to be scrolled. However, this may still be more effective than trying to integrate information while making frequent transitions between locations.[6546]

2.5.1.2-9 Support for 'Top-Down' Strategies for Navigating Hierarchies
Use of top-down navigation strategies should be supported.
Additional Information: Determining relationships between the top-level display and the target may be less demanding than determining the relationship between a start and target screen and then identifying a path through intermediate displays. Therefore, providing features such as the main menu button will aid navigation.[6546]

2.5.1.2-10 Support for 'Bottom-Up' Strategies for Navigating Hierarchies
The display system should support users in identifying reversal points.
Additional Information: The identification of reversal points can encourage and facilitate the use of bottom-up strategies.[6546]

2.5.1.2-11 Representation of Distance
The display system should be represented so that the user's perception of the relatedness of displays is consistent with distance in the structure of the display hierarchy.
Additional Information: Designers should strive for compatibility between cognitive (i.e., the user's perception) and organizational distance (as defined by the structure of the display network).[6546]

2.5.1.2-12 Distortion-Based Orientation
If user orientation is based on seeing landmarks that are beyond what can fit on a single display, distorted views can be presented to facilitate user recognition of location.

Additional Information: These techniques allow a user to view details of an area of a large display page while keeping the rest of the display page in view. This is accomplished by presenting the focus area at a higher level of magnification than the rest of the display page. The resulting display provides a distorted view of the large display page because different portions of the display are presented in different levels of magnification. Local details are emphasized to support interactions, such as the retrieval of detailed information or display selection. The presence of the unmagnified area (the area outside of the focus area) provides the user with contextual information. Showing key features of the global structure in the unmagnified area informs the user of the existence and location of other parts of the information structure and supports the interpretation of local details. [6546]

2.5.1.2-13 Visually Identifying Hypertext Links
The visual coding of selectable items should not add visual clutter or decrease the overall effectiveness of the coding scheme.[6546]

2.5.1.2-14 Typographically Identifying Hypertext Links
Codes such as bold, italics, and underline should not be used to identify selection points if other conventional uses of these codes in the text, such as to emphasize certain words, is likely to confuse the user.[6546]

2.5.1.2-15 Identifying Hypertext Links by Cursor Coding
A selection point should not be identified solely by changes in the cursor.
Additional Information: Coding the cursor to indicate links can have disadvantages. First, the changes in the cursor are momentary; they only occur when the cursor is positioned near a link. This reduces the ability of users to anticipate the link. Second, the visual codes, such as changing the shape from a pointer to a set of cross hairs, may be less salient than coding applied directly to the link text. These factors may increase attentional demands for locating links.[6546]

2.5.1.2-16 Evaluating Hypertext Links
The user should be able to evaluate the information to which a link refers prior to actually retrieving it.
Additional Information: The act of deciding whether to access a particular node imposes a cognitive burden that may interfere with other important tasks. In addition, unproductive searches may interfere with the user's responses or result in the user becoming lost in the information structure during time-critical situations. Therefore, some indication of the nature of the target information (e.g., a 'preview') should be provided.[6546]

2.5.1.2-17 Navigating Individual Hypertext Nodes
The amount of information presented at a single node should be consistent with the user's ability to readily navigate to the needed information.
Additional Information: There are tradeoffs associated with node size. When the nodes are larger than the display screen, the user may have to scroll, pan, or zoom to view its information. However, when smaller nodes are used, information may be spread over multiple nodes requiring the use of multiple links to access required information. Limited guidance exists on the tradeoff between the demands of manipulating large nodes and accessing multiple nodes. The approach chosen should take into account such factors as the how navigation functions are implemented, the system's response to navigation inputs, and the ways in which links are defined. It should aim to reduce the cost to the user of accessing the information. For example, if scrolling the contents of a node involves a demanding motor task combined with visual search, users may prefer to access additional links to smaller nodes rather than being presented with a single large node. However, if a significant amount of time is needed to access each link, users may prefer fewer, larger nodes. Large nodes may also be acceptable if the system identifies the desired information within the node, rather than just displaying the beginning of the node.[6546]

2.5.1.2-18 Backtracking Capabilities in Hypertext Interfaces

Backtrack capabilities should always be available in hypertext interfaces and should function in the same way.

Additional Information: Backtrack capabilities, which almost all hypertext systems feature, are vital for allowing users to become reoriented. Some hypertext systems use this capability inconsistently, especially where multiple means are provided for accessing information. This inconsistency can cause problems.[6546]

2.5.1.2-19 Multiple Hypertext Navigation Methods

When multiple methods are provided for navigating in a hypertext system, they should function similarly.

Additional Information: Users should not have to apply different strategies to accomplish the same task.[6546]

2.5.1.3-1 Integrating Information within Large Display Pages

When users are required to integrate information across a large display, the HSI should be designed to minimize navigation burdens for paging, scrolling, and zooming.

Additional Information: Minimizing the navigation burdens can make available more cognitive resources for the information integration task. Table 2.5 provides means for reducing navigation demands in large displays that require operations such as zoom, pan, and scroll.[6546]

Table 2.5 Reducing navigation demands in large displays

Minimize the complexity of the navigation moves – Simplifying the navigation action may reduce the demands imposed on cognitive resources, especially central cognitive processes (e.g., determining relationships between the current and desired locations) and response processes (e.g., manipulating the navigation control). The least demands are associated with displays that require no panning, scrolling, or zooming. More demands are associated with displays that require motion in one dimension (e.g., panning in either the vertical or horizontal direction, but not both). Still more demands may be associated with displays that require motion in multiple dimensions (e.g., panning in both the vertical and horizontal directions or panning plus zooming). Therefore, displays should be designed to minimize the number of dimensions that must be manipulated to access the information.

Support comprehension of navigation moves – The central processing demands associated with the move may be greater when the current and target positions cannot be seen at the same time on the display page. In such cases, cognitive demands may be imposed for developing a mental representation of the display page and for determining the relationship between the starting and target locations. If the navigation moves proceed as a series of discrete steps, then additional demands may be imposed for developing an understanding of the relationships between each of these discrete views. These processing demands may interfere with the cognitive task involved with information integration. The use of design approaches for supporting visual momentum can be applied to large displays to support the user's understanding of the relationships of information items in a display space and reduce information access costs.

Minimize the amount of time needed to complete a display navigation move – Moving from one location to another on the display page requires time. It may be affected by such factors as the number of steps in a navigation move, the length of the navigation moves, and the display system's response time. As the length of time increases there is an increased likelihood that the information held in working memory will be lost. Therefore, the amount of time needed to complete a navigation move should be minimized. This may be accomplished by reducing the response time of the display system and reducing the number of actions required to complete a navigation move.

Minimize the difficulty of target detection – When moving from one location to another on the display page, cognitive demands are imposed on perceptual processes for detecting the target information item. These demands may increase the amount of time required to complete the navigation move and, therefore, increase the likelihood that the information held in working memory will be lost. Therefore, the HSI should be designed to facilitate target detection. For example, the targets should be visually distinct from the background. In addition, the scrolling, panning, or zooming motions should be sufficiently slow when approaching the target so the operator can recognize the target.

2.5.1.3-2 Consistent Framing for Pan and Zoom
Framing functions should be performed consistently for panning and zooming operations so that the same area of the display remains in view when switching between zoom and pan modes.[6546]

2.5.1.3-3 Selecting the Center for Zoom and Pan Operations
Prior to executing a zoom or pan operation, the user should be able to select a particular position on the display to become the center for that operation.[6546]

2.5.1.3-4 Default Configuration for Zoom, Pan, and Scroll
Displays that can be navigated via zoom, pan, or scroll operations should provide a means for the user to rapidly return the display to the default or starting configuration.[6546]

2.5.1.3-5 Size Compensation for Zoom
When users zoom a display, the system should compensate for changes in the size of symbols, labels, and other graphical objects.
Additional Information: This compensation should maintain these objects at a legible size without allowing them to become unnecessarily large and, thus, cluttering the display. When zooming out on a display page, symbols may be aggregated and presented as a single object to reduce visual clutter, if it is not necessary for users to act on them individually while viewing the display at this level of magnification.[6546]

2.5.1.3-6 Minimize Scrolling Demands
Displays should be designed to preclude the need for excessive scrolling.
Additional Information: If possible, use a single screen for the full display, unless it causes reading difficulty due to such factors as display crowding.[6546]

2.5.1.3-7 Column Width of Scrolled Text
If text is meant to be scanned while it is scrolled, the column width should be 35 or fewer characters across.
Additional Information: This value pertains to text that the user must scan while it is scrolled. Text displays in which the user alternates between scrolling and reading may have wider columns.[6546]

2.5.2-1 Window Identification

Windows should be identified by a label consistently located at the top of the window's border.
Additional Information: Labels should remain on the screen while the data changes.[5908]

2.5.2-2 Window Selection and Display

Users should be able to select separate data windows that will share a single display screen.[5908]

2.5.2-3 Displaying Multiple Windows

When multiple windows are open simultaneously, the user should have the capability to easily tile, layer, or sequentially view the windows (see Figure 2.2).
Additional Information: Depending upon user needs, data windows might appear simultaneously as segments of a joint display (i.e., tiled), might be overlaid in varying degrees so as to obscure one another (i.e., layered), or might be displayed sequentially at the user's option. In the latter condition, multiple display windows will differ little from multiple display pages, except perhaps in speed of sequential access.[5908]

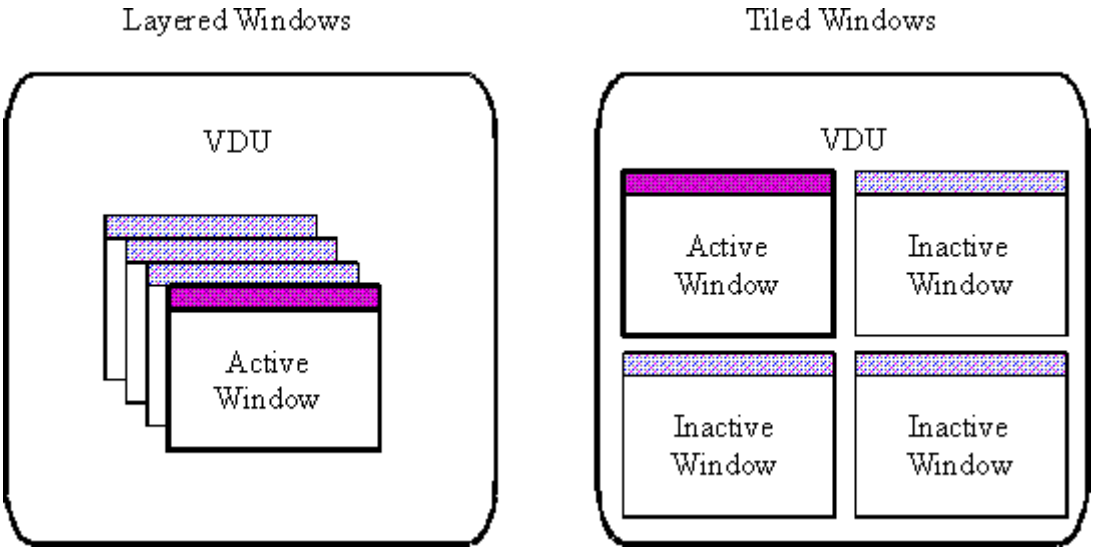

Figure 2.2 Layered and tiled windows

2.5.2-4 Managing Open Windows

The system should keep track of the windows that are open (but not necessarily active or displayed), and provide a means of displaying the list of open windows to the user.
Additional Information: Open windows, for example, could be listed in a menu or as a graphic.[5908]

2.5.2-5 Window Demarcation

Windows should be visually separated from each other and from their background, preferably by borders or similar demarcation.[5908]

2.5.2-6 Distinction Between Window Types
Window types should be perceptually distinct (see Figure 2.2).
Additional Information: For example, active windows in both the tiled and layered window environments should be perceptually distinct from inactive window types.[5908]

2.5.2-7 Active Windows Priority
Under normal operating conditions, active windows should be frontmost on the display.[5908]

2.5.2-8 Caution and Warning Window Priority
Caution and warning windows should be frontmost on the display.[5908]

2.5.2-9 Default Window Size
The size and shape of the initial presentation of a window should be consistent with its contents (amount of information, number of menus, and data fields).
Additional Information: When a window temporarily obscures other displayed data, the obscured data should not be permanently erased but should reappear if the overlay is removed.[5908]

2.5.2-10 Minimum Height for Text Windows
The default height for text windows and windows used for scanning data should be at least four lines of information.
Additional Information: Window sizes of four lines provide better performance than those with fewer than four lines. Windows with more than four lines show little advantage over windows with four lines.[5908]

2.5.2-11 Minimum Width for Text Windows
The default width for a generic text window should enable 50 to 80 characters to be displayed.
Additional Information: When users read continuously scrolling text (at a rate set by the user), line lengths of 52 to 78 characters provide the fastest performance.[5908]

2.5.2-12 Consistent Window Control
User control of windows should operate consistently from one display to another for each type of window.
Additional Information: Control of predefined windows may simply involve "opening" and "closing" them, by selection of displayed option labels or function keys. Control of user-defined windows may require user specification of window contents, window size, and positioning on the display. Such window control must be learned by a user, and consistent design of control logic aids that learning.[5908]

2.5.2-13 Window Control Functions
As appropriate to the user task, windows should be capable of the following operations: scrolling/panning, resizing, moving, hiding, activating, deactivating, copying to/from, zooming in/out, tabbing, and undo-last.
Additional Information: Some tasks will require fewer window operations than others. For example, a window that simply presents a one-line status message from the system that the user will only read and not respond to might need to only have the ability to be closed. It might not need to be movable, or adjustable in size.[5908]

2.5.2-14 Consistent Control Within Windows
When control actions such as command entry may be taken by a user working within a window, those control actions should be consistent from one window to another.

Additional Information: Cursor positioning controls should operate consistently within all windows. If controls in one window operate differently than in another, user confusion will be unavoidable.[5908]

2.5.2-15 Window Opening Methods
The user should be able to open a window by performing any of a set of simple actions.
Additional Information: Typical methods of opening windows include: issuing a command to open a specific window, selecting a window title from a list on a menu, or selecting an icon for the window.[5908]

2.5.2-16 Closing Windows
Users should be able to close a window with a single action.[5908]

2.5.2-17 Easy Shifting Among Windows
If several windows are open, several easy means should be provided for a user to shift among them.
Additional Information: Typical methods of shifting among open windows include: clicking a mouse button, the tab key, cursor keys, or a function key. The most direct method might be to allow a user to select a window by pointing anywhere within its displayed borders, but that action might be confused with the selection of a particular item within the window.[5908]

2.5.2-18 Activating a Previously Opened Window
The user should be able to activate a window by performing any of a set of simple actions in that window or related to that window.
Additional Information: A window might be activated by moving the pointing cursor to the window and performing any action, including pressing a key or a button on a cursor control device, issuing a command to open a specific window, selecting a window title from a list on a menu, or selecting an icon representing the window.[5908]

2.5.2-19 Activation of Window Cursor
The action that activates a window should automatically position the placeholding cursor in that window so that the user can provide inputs through that window.[5908]

2.5.2-20 Multi-Modal Window Designation
If windows are capable of different modes, the system should provide immediate and unambiguous feedback concerning which mode is active.[5908]

2.5.2-21 Movable Windows
Window movement capability should be provided such that the user can move windows to different areas of the display.[5908]

2.5.2-22 Window Position
It should not be possible to position windows in such a way that menu bars, access to the command area, or caution and warning messages are obscured.[5908]

2.5.2-23 Smooth Window Movement
Movement of a window should appear to be smooth and continuous to the user.[5908]

2.5.2-24 Indicate Active Window
If several windows are displayed at once, the window(s) in which action can be taken should be indicated.

Additional Information: Adding windows to a display can increase the conceptual complexity of control actions as well as the difficulty of data assimilation. A prominent cursor might be displayed in the currently active window, or perhaps the displayed border of an active window to indicate to a user which window is currently "active."[5908]

2.5.2-25 Update of Hidden Windows
A window that is not displayed should be capable of receiving information from the system.
Additional Information: Parameters should continue to be updated whether or not the display page on which they are reported is currently displayed.[5908]

2.5.2-26 Alerting User to Information Availability
The system should alert the user to critical information that becomes available in an inactive or non-displayed window.[5908]

2.5.2-27 Window Activates Upon Opening
The action that opens a window should automatically make that window active.[5908]

2.5.2-28 Varying Window Size
Users should be able to change the horizontal and vertical dimensions of a window independently or together.[5908]

2.5.2-29 Accessibility to Partially Removed Windows
Windows partially moved off the display should be made readily accessible with a single action.[5908]

2.5.2-30 Scrollable Windows
The user should have the ability to scroll through the contents of a window both horizontally and vertically.[5908]

2.5.2-31 User Control of Automatic Update
Automatically updated windows should have display freeze capability.[5908]

2.5.2-32 Multiple Views
If separate display pages contain information that the user must compare, combine, or otherwise mentally process, then they should be presented simultaneously.
Additional Information: Multiple displays can reduce the information access costs associated with alternating between the display pages. This may be accomplished via duplicate display devices or via multiple display windows that can be viewed together on the same display screen.[6546]

2.5.2-33 Minimize Needs for Window Manipulation
The amount of resizing, placement, and manipulation of windows required for using the HSI should be minimized.
Additional Information: Window controls should be provided to allow users to adjust windows for personal needs. However, unnecessary resizing, placement, and manipulation of windows can increase information access cost and divert mental resources from more important tasks by requiring the user's time and attention. Therefore, the window should be initially presented in the most appropriate form for the user's tasks.[6546]

2.5.2-34 Obscured Critical Information
The system should not allow the user to move or resize a window containing non-critical information such that it obscures critical information.[6546]

2.5.2-35 Positioning Critical Windows
The system should not allow the user to move a window containing critical information off the display screen.[6546]

2.5.2-36 Default Window Location
Windows should have a default location on the display screen.[6546]

2.5.2-37 Temporarily Obscured Display Data
Display data that is temporarily obscured by a window object should reappear when the object is removed.
Additional Information: If a window object temporarily obscures display data, the data should not be permanently erased.[6546]

2.5.2-38 Obscuring the Active Window
A temporary window object should not obscure critical control information and command entry interfaces of the active window.[6546]

2.5.2-39 Number of Allowable Open Windows
An upper limit on the number of windows allowed to be open at one time should be defined to ensure that system response time is not compromised.[6546]

2.5.2-40 Suppression of Window Objects
An easy means for the user to suppress the display of windows should be provided.
Additional Information: Two examples include closing a window and reducing the window to an icon.[6546]

2.5.2-41 Separate Menu Bars for Applications
A separate menu bar should be provided for each application window, where different applications are operating concurrently in open windows (e.g., multi-tasking).
Additional Information: An example of separate menu bars is shown in Figure 2.3.[6546]

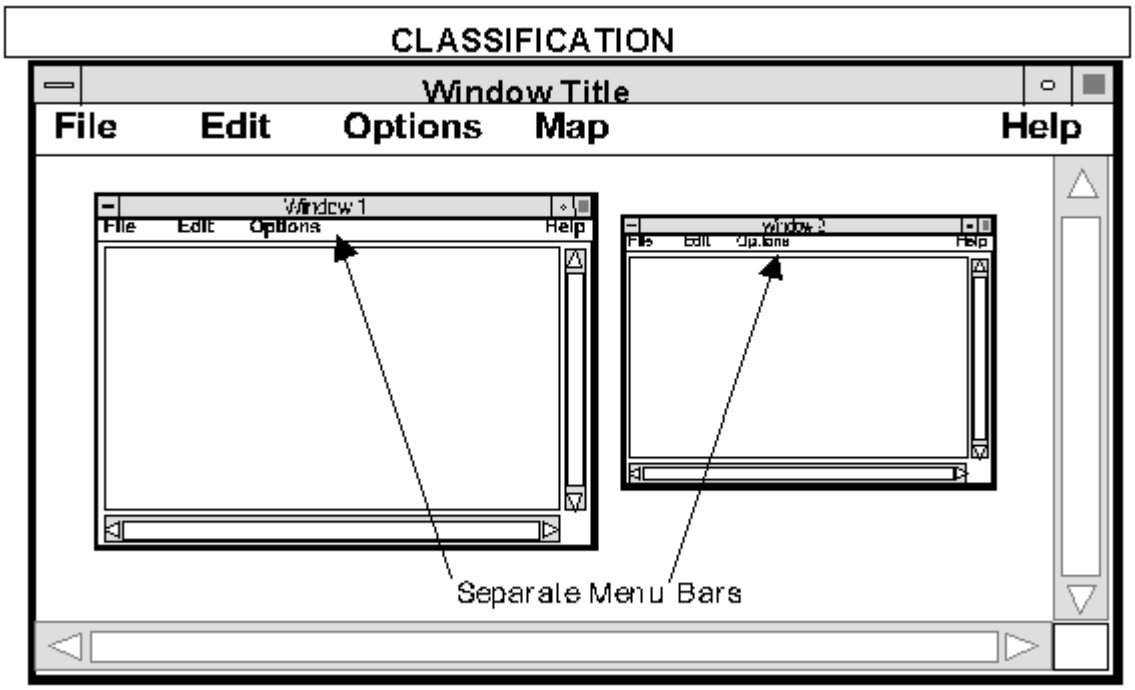

Figure 2.3 Example of different applications with separate menu bars

2.5.2-42 Conveying the Relationship Between Window, Icon, and Action
The window system should convey to the user the relationship between the window, the icon, and the action when a window is opened or closed.
Additional Information: For example, an animated depiction of the window closing may portray the window shrinking to an icon, and vice versa when the window opens (see Figure 2.4).[6546]

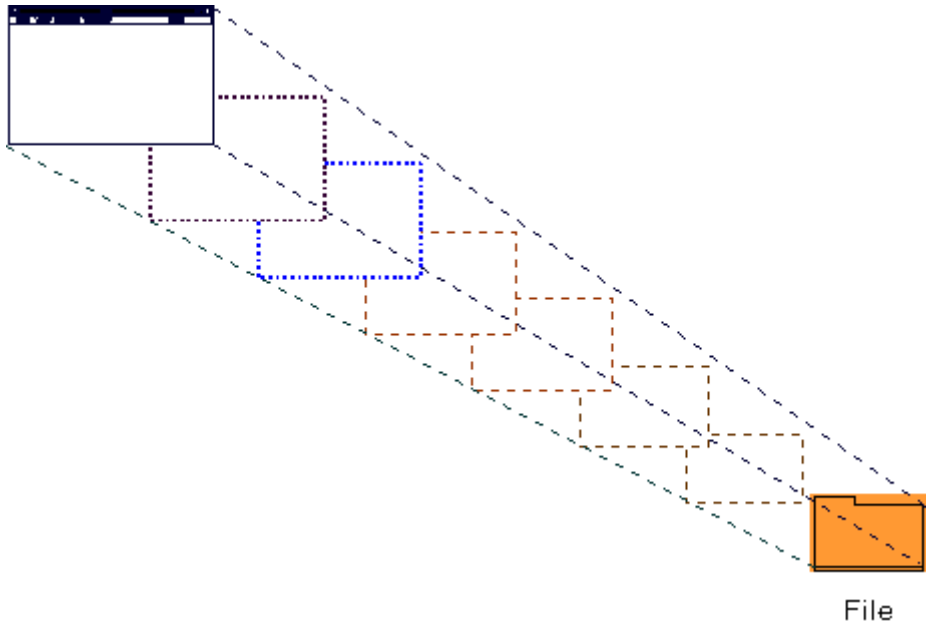

Figure 2.4 Example of figure animation

2.5.2-43 Labeling Windows
Window objects, dialog boxes, and subordinate windows should be labeled.
Additional Information: The labels should convey information important to the use of these items, such as content, purpose, or menu path (e.g., the source or media from which the information originated.)[6546]

2.5.2-44 Closing Main Window and Subordinate Objects
When a main application window is closed by the user, all associated subordinate windows and dialog boxes should also close.[6546]

2.5.2-45 Matching Selection Items and Window Labels
The titles of subordinate windows should match the menu selection items of the menus from which they are selected.[6546]

2.5.2-46 Indication of All Open Windows
The system should indicate all open windows.
Additional Information: This indication should allow the user to easily identify all open windows, including any that are hidden. The indication may be presented at the user's request, rather than being continuously displayed. Possible formats include a text list, iconic representation, and network representation. Examples are shown in Figure 2.5.[6546]

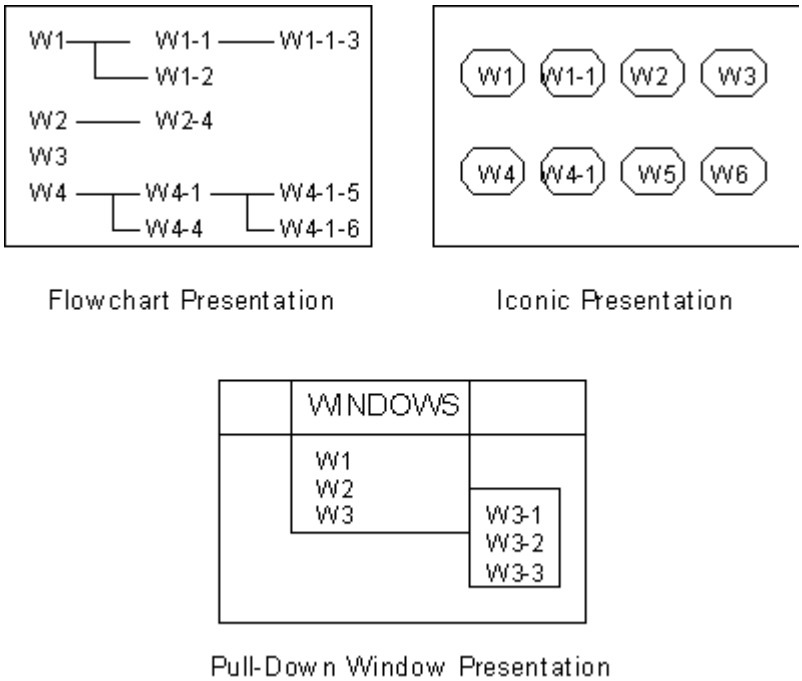

Figure 2.5 Examples of open window indications

2.5.2-47 Window Automation Coordinated with Tasks
Automated window management should be coordinated with the user's tasks.
Additional Information: The system needs to make selections that are relevant to the user's tasks and effectively convey information that resolves questions associated with the user's cognitive demands. This will require that the system contain, or be based on, a good model of the user's functions for the task domain.[6546]

2.5.3-1 Display Control
Users should be able to specify the information to be displayed and select the format in which it is presented.[5908]

2.5.3-2 Display of Control Options
Screen control locations and control options should be clearly and appropriately indicated.[5908]

2.5.3-3 Zooming for Display Expansion
The user should be able to expand the size of any selected area of the display.[5908]

2.5.3-4 Functional Labeling for Display Framing
Display framing should be described (e.g., in user instructions and key labels) in functional terms, and wording that implies spatial orientation should be avoided.
Additional Information: Examples of framing in functional terms are: "forward" and "back" or "next" and "previous." Control of display framing functions might be implemented by keys marked with arrows, to avoid verbal labels altogether.[5908]

2.5.3-5 Easy Paging
When requested data exceeds the capacity of a single display frame, users should be given some easy means to move back and forth over displayed material by paging or panning/scrolling.
Additional Information: Dedicated function keys can provide for paging forward and back.[5908]

2.5.3-6 Show Changing Scale
When a display is expanded from its normal coverage, a scale indicator of the expansion factor should be provided.
Additional Information: A linear indicator of current map scale might be shown in the margin, or perhaps simply a numeric indication of the display expansion factor (e.g., : x4 :).[5908]

2.5.3-7 Show Overview Position of Visible Section
When a display is panned and/or expanded from its normal coverage, some graphic indicator of the position in the overall display of the currently visible section should be provided.[5908]

2.5.3-8 Return to Normal Display Coverage
If a user is allowed to pan over an extended display, or zoom for display expansion, an easy means for the user to return to normal display coverage should be provided.
Additional Information: For example, return to normal display coverage might be accomplished by a function key labeled RETURN, or perhaps RESET.[5908]

2.5.4-1 Data Updated as Available

Displayed values should be automatically updated as more current data become available.[5908]

2.5.4-2 Readability of Changing Data

Changing data values that must be read should be displayed in a fixed position and updated no more than once per second. If users need only to monitor general trends in changing data values, and do not need to take exact readings, faster update rates may be acceptable.[5908]

2.5.4-3 Visual Integration of Changing Graphics

When a user must visually integrate changing patterns on a graphic display, the data should be updated at a rate appropriate to human perceptual abilities for that kind of data change.
Additional Information: Slowly developing patterns may be seen more easily with time compression, i.e., with rapid display of sequentially stored data frames. Fast changing data may require time expansion, i.e., slowed output, to aid pattern perception. In some applications, it is permissible to allow a user to control the speed for update of displayed data.[5908]

2.5.4-4 Refresh Rate for Free-drawn Graphics

For free-drawn graphics, the refresh rate on the monitor should be high enough to produce the appearance of a continuous track.[5908]

2.5.4-5 Display Freeze

The user should be able to "freeze" automatically updated data at any point. This is necessary in order for the user to examine changed data more deliberately.[5908]

2.5.4-6 Labeling Display Freeze

When a display is "frozen," the display should be appropriately labeled to remind users of its "frozen" status.[5908]

2.5.4-7 Signaling Changes to Frozen Data

When a display being updated in real-time has been frozen, the user should be advised if some significant, but not displayed, change should be detected in the computer processing of new data.[5908]

2.5.4-8 Resuming Update After Display Freeze

When the user elects to resume update after a display being updated in real time has been frozen, the resumed display update should be positioned at the current real-time point.
Additional Information: In some applications, a user might wish to resume display update at the point at which it was stopped, with the display change lagging real-time data change. Alternatively, a user might choose to see a speeded "replay" of interim changes to regain current display status.[5908]

2.5.5-1 Temporary Suppression of Displayed Data

The user should be able to temporarily suppress standard data displays.[5908]

2.5.5-2 Labeling Display Suppression

A data display that has been suppressed should be annotated with an appropriate label to remind users that data have been suppressed.[5908]

2.5.5-3 Signaling Changes to Suppressed Data

Users should be advised if some significant (but not displayed) change is detected in the computer processing of new data when data have been suppressed from a display.[5908]

2.5.5-4 Resuming Display of Suppressed Data

Data that has been suppressed from a display should be able to be quickly restored to its complete, originally generated form.[5908]

2.5.5-5 Dedicated Function Key

Function keys used to restore suppressed data should have no other use.
Additional Information: For instance, if a user presses a key to restore suppressed data, that key should only restore the data, and should not also move the cursor to some other position.[5908]

2.5.6-1 Continuous Text Data
Paging and windowing should not be used when searching through continuous text data.[5908]

2.5.6-2 Consistent Orientation
A consistent orientation for display framing should be used.
Additional Information: Users can either (1) conceive the display frame as a window moving over a fixed array of data, here called "panning," or (2) conceive data as moving behind a fixed display frame, commonly called "scrolling."[5908]

2.5.6-3 Panning with Free Cursor Movement
In applications where a user moves a cursor freely about a page of displayed data, panning should be adopted rather than scrolling as the conceptual basis of display framing.[5908]

2.5.6-4 Framing Applied to All Data
Framing functions (e.g., panning, zooming) should affect all displayed data in the same way.
Additional Information: For example, when a mimic display is scrolled, background items such as representations of piping and components should move integrally with overlaid "active" data.[5908]

2.5.6-5 Paging Controls
Users should be allowed to move easily from one page to another for displays that are partitioned into separately displayable pages.[5908]

2.5.6-6 Horizontal Scrolling
The user should have the ability to shift the text information shown when the user cannot view all of the characters in the horizontal line.
Additional Information: This shift should be accomplished with a single action (e.g., by moving a scroll icon on a horizontal scroll bar).[5908]

2.5.6-7 Appropriate Scrolling/Paging Structures
Structures for horizontal scrolling/paging should appear only on displays for which horizontal movement is appropriate. Similarly, structures for vertical scrolling/paging should appear only on displays for which vertical movement is applicable.[5908]

2.5.6-8 Common Display Structure
Display structure used for scrolling and paging should be common to all files.[5908]

2.5.6-9 Scrolling/Paging Techniques
Users should have the ability to scroll or page using several different techniques.
Additional Information: For example, paging should be available by means of moving a page icon on the scroll bar, or by the use of a dedicated function key for paging forward and a dedicated function key for paging back through a file. Scrolling might be performed by a scroll bar, keyboard arrow keys, and keystroke commands.[5908]

2.5.6-10 One Structure for Vertical, One for Horizontal Movement
Only one scrolling/paging structure should be used for vertical movement in a display and one for horizontal movement in a display.

Additional Information: The placement of the scrolling/paging structures should clearly indicate the function for vertical or horizontal movement. For example, one scroll bar might be placed along one of the side borders of the display for vertical scrolling and another scroll bar might be placed along the top or bottom (opposite the menu bar) of the display for horizontal scrolling.[5908]

2.5.6-11 Labeling Scrolling Function
The function of the scrolling/paging structure should be clearly indicated by either a textual or graphic label.
Additional Information: For example, a graphic label for the scroll bar might be a scroll icon.[5908]

2.5.6-12 Evident Direction of Paging
The direction that users must page (toward the top or bottom, left or right) should be evident to users before they begin to page.
Additional Information: For example, scroll arrows on a scroll bar might point in the direction that corresponds to the paging direction.[5908]

2.5.6-13 Paging in One or Multiple Page Increments
Users should be able to page in one page or multiple page increments.
Additional Information: For example, the user might page multiple pages directly by moving the page icon on the scroll bar, at which time the display might move to the location in the file that corresponds to the page number on the page icon.[5908]

2.5.6-14 Discrete Paging
When moving over multiple pages, the movement should be discrete with no display of intermediate pages between the starting page and the selected page.[5908]

2.5.6-15 Indicate Absolute and Relative Positions of User
Scrolling/paging structures should indicate both the absolute and relative positions of the user in the data file.
Additional Information: For example, a page icon on the scroll bar might indicate (1) the absolute position by containing the page number in the data file, and (2) the relative position by means of the spatial location of the icon on the scroll bar.[5908]

2.5.6-16 Graphic Indication of Scroll Position
Large display outputs that are viewed by continuous panning/scrolling should be provided with a graphic indicator inset at the margin of the display frame to indicate current location.[5908]

2.5.6-17 Scroll by Line or Display Unit
The scroll motion rate should allow the user to scroll by line or by display unit.[5908]

2.5.6-18 Display Window
ROLL and SCROLL commands should refer to the display window, not the text/data.
Additional Information: The display window should appear to the user to be an aperture moving over stationary text.[5908]

2.5.6-19 Parameters Refer to Data not Window
The parameters of roll/scroll functions should refer to the data being inspected, not to the window.

Additional Information: From a data orientation, "roll up 5 lines" means that the top five lines of data would disappear and five new lines would appear at the bottom; the window through which the data is viewed remains fixed. However, when a windowing orientation is established, the wording of scroll functions refers to the display page (or window) and not to the displayed data. In that case, the command "Up 10" would mean that ten lines of data will disappear from the bottom of the display and ten earlier lines will appear at the top.[5908]

2.5.7-1 Anticipation of Automated Interface Management Actions

Automated interface management features should be designed such that their operation can be anticipated by users.

Additional Information: Task performance can be enhanced by HSI features that present task information in ways that support planning and prioritization. If automatic actions cannot be anticipated by the user, additional cognitive resources may be required to continually monitor the automated system.[6546]

2.5.7-2 Observability of Automated Interface Management Actions

The operation of automated interface management features should be apparent to the user.

Additional Information: Automated interface management features that provide little feedback when they act may require the user to divert attention away from current tasks to determine whether the change has occurred. Understanding of automatic actions can be supported by requiring the user to approve actions prior to execution.[6546]

2.5.7-3 Distracting Automated Interface Management Actions

The operation of automated interface management features should not draw excessive attention from the user.

Additional Information: HSI features that draw excessive attention or cause distractions may draw cognitive resources away from the user's primary tasks and diminish overall performance.[6546]

2.6.1-1 Natural Units of Text

Users should be allowed to specify segments of text in whatever units are natural for entry/editing.
Additional Information: For unformatted ("free") text, natural units will be characters, words, phrases, sentences, paragraphs, and pages. For specially formatted text, such as computer program listings, other logical units (e.g., lines, procedures, and subprograms) may be used.[5908]

2.6.1-2 Text Displayed as Printed

Users should be allowed to display text exactly as it will be printed.
Additional Information: Accurate display is particularly necessary when the format of printed output is important, as when printing letters and tables. Ideally, text displays should be able to represent all the features that are provided in printed output, including upper and lower case, underlining, bolding, subscripting, superscripting, special symbols, and different styles and sizes of type. When those features are important, the necessary display capability should be provided. For special formatting features that are not frequently used, it may be sufficient to use extra symbols to note text features that cannot be directly displayed. In that case, care should be taken that such annotation does not disturb the spacing of displayed text. This may require two display modes, one to show text spacing as it will be printed, and the other to show annotations to the text. A corollary to this recommendation is that changes made to displayed text should appear as a user makes them. Some line-based editors show changes only after a document has been filed and later recalled for display, which does not represent good user interface design.[5908]

2.6.1-3 Format Control by User

Easy means should be provided for users to specify required format control features (e.g., margin and tab settings) during text entry/editing.
Additional Information: Required format features will vary depending on the application. The intent of this guideline is that all required format features should be easy to control. Any format features that are provided but are optional for the user's task should not be made easy to use at the expense of required format features. One convenient method of margin and tab control is to allow users to mark settings on a displayed "ruler" that extends the width of a page and is continuously displayed at the top of the screen.[5908]

2.6.1-4 Establishing Predefined Formats

When text formats must follow predefined standards, the standard format should be provided automatically and not rely on users to remember and specify proper formats.
Additional Information: For example, standard formats might be required for letters, memos, or other transmitted messages.[5908]

2.6.1-5 Storing User-Defined Formats

When text formats cannot be predicted in advance, users should be able to specify and store for future use the formats that might be needed for particular applications.
Additional Information: For example, a special format might be adopted for generating a particular report at periodic intervals.[5908]

2.6.1-6 Consistent Word Spacing

Unless otherwise specified by the user, entered text should be left-justified to maintain constant spacing between words, leaving right margins ragged if that is the result.[5908]

2.6.1-7 Hyphenation by Users

In the entry/editing of text, automatic pagination and line breaks by the computer should keep words intact, and hyphenation should only be introduced where specified by users.
Additional Information: Where compound words have been hyphenated by a user, the computer should break the compound after the hyphen for pagination or line breaks unless otherwise specified by the user. Compound words formed with slashes (e.g., "entry/editing") might be treated in a similar manner.[5908]

2.6.1-8 Changing Physical Characteristics of Text

The user should have the ability to change the physical characteristics of text.
Additional Information: The physical characteristics under the user's control might include font type, size, and capitalization; the ability to change the font style (e.g., by underlining, italicizing, and/or bolding characters or strings of characters); and/or to alter tab position in any part of a text file.[5908]

2.6.1-9 Tabs

A tab function should be available for paragraph indentation and for moving the cursor to a preselected location.
Additional Information: The user should be able to set tabs at locations across a display, consistent with the spacing provided by the space bar. The symbols indicating the location of tabs should be invisible to the user by default but should become visible with a single action by the user (for example, by making a screen ruler appear on the display or displaying the tab symbols within the text field).[5908]

2.6.1-10 Tab Controls

For editing programs or tabular data, cursor tab controls or other provisions for establishing and moving readily from field to field should be provided.[5908]

2.6.1-11 Margins

The user should have the ability to change margins for a text file.
Additional Information: This capability should include changing margins so that the user cannot view all of the characters in the horizontal line. Rationale: Users may need to have a double page size for the equivalent of a 14 by 17 page.[5908]

2.6.1-12 Automatic Line Break

For entry/editing of unformatted text, an automatic line break ("return") should be provided when text reaches the right margin, with provision for user override.
Additional Information: For specially formatted text, such as computer program listings, users may need to control line structure themselves and hence need to override any automatic line break. Even when entering unformatted text, a user will sometimes wish to specify a new line at some particular point, if only for aesthetic reasons.[5908]

2.6.1-13 Automatic Pagination Aids

Automatic pagination for text entry/editing should be provided, allowing users to specify the page size.
Additional Information: For short documents, automatic pagination may not be needed. If it is not provided, an advisory message should be presented to the user.[5908]

2.6.1-14 User Control of Pagination

When automatic pagination is provided, users should be allowed to override that pagination in order to specify page numbers at any point in a document.

Additional Information: When producing a large document, a user may wish to split it into several separate text files for convenience in editing, and hence, need to control the page numbering of those component sections. In general, a user will want flexibility in assembling different computer files to create a composite document. For example, a user might wish to number the first page of a document "23," or perhaps skip a page number in the middle of a document.[5908]

2.6.1-15 Controlling Integrity of Text Units
When automatic pagination is provided, users should be allowed to specify how many lines in a paragraph can stand alone at the bottom or top of a page ("widows" and "orphans"), and to specify any text that should not be divided between two pages, such as lists or tables.[5908]

2.6.1-16 Protecting Text During Page Overruns
When a user is inserting text into a document that has already been paginated, no text should be lost if the user inserts more text than a page can hold.
Additional Information: It is difficult for a user to keep track of page size, particularly if the size of the display screen is less than the full page specified for printed text. A user will often not know when more text has been inserted than will fit into a page. The computer should accommodate text insertions with automatic repagination.[5908]

2.6.1-17 Head- and Foot-of File
The means should be provided to readily move the cursor to the head (beginning) or the foot (end) of the file.[5908]

2.6.1-18 Inserting
When inserting words or phrases, items to be inserted should be displayed as the final copy will appear.[5908]

2.6.1-19 String Search
Users should be allowed to specify a string of text and request the computer to advance (or back up) the cursor automatically to the next (or last previous) occurrence of that string.
Additional Information: An automatic string search capability will generally speed cursor placement in comparison with incremental positioning, particularly when moving over large portions of a document. Expert users may also wish to incorporate special characters in string search, including format control characters such as those for tabbing and bolding.[5908]

2.6.1-20 Multiple Methods of Searching
Users should have multiple methods for searching for lines or alphanumeric strings.[5908]

2.6.1-21 Search for Line Numbers
Users should have the ability to search for and move to a specific line number in a file.[5908]

2.6.1-22 Upper and Lower Case Equivalent in Search
Unless otherwise specified by a user, upper and lower case letters should be treated as equivalent in searching text.

Additional Information: For example, "STRING," "String," and "string" should all be recognized/accepted by the computer when searching for that word. In searching for words, users will generally be indifferent to any distinction between upper and lower case. The computer should not compel a distinction that users do not care about and may find difficult to make. The computer should also ignore such other features as bolding, underlining, parentheses, and quotes when searching text.[5908]

2.6.1-23 Specifying Case in Search
When case is important, users should be allowed to specify case as a selectable option in string search.
Additional Information: Users may also wish to specify features such as bolding, underlining, and quotes when searching text. For example, when searching a document in which all the headings are capitalized, a user might wish to find a string only when it appears in a heading.[5908]

2.6.1-24 Global Search and Replace
When systematic editing changes will be made throughout a long document, a "global search and replace" capability should be provided.
Additional Information: Global search and replace is where the system replaces all occurrences of one text string with another. Global search and replace could be designed in two different ways. One user might want the computer to make all changes automatically. Another user might want to review and confirm each change. Ideally, both options should be available.[5908]

2.6.1-25 Case in Global Search and Replace
If a global search and replace capability is provided, the case of the replacement string should match the case of the old string, unless otherwise specified by the user.
Additional Information: If a word is replacing the first word in a sentence, the first letter of the new word should be capitalized. If it is replacing a word that is entirely in lower case, then the new word should also be in lower case. However, the user should be able to replace a word with incorrect case with a correct version.[5908]

2.6.1-26 Moving Text
Users should be allowed to select and move text segments from one place to another within a document.
Additional Information: A user should not have to re-enter (i.e., rekey) text that is already available to the computer. One convenient method of allowing the user to both move and copy text is to provide a "cut and paste" facility in which the "cut" text remains in a storage buffer and can be "pasted" more than once. For copying, the user can cut text, paste it back into its original location, and paste it again at a new location.[5908]

2.6.1-27 Pasting Text into a Graphical File and Vice Versa
The user should be able to paste (1) alphanumeric data cut or copied from a text file or table into a graphical display, and (2) graphical data into a text or tabular file.[5908]

2.6.1-28 Cutting Graphical Objects and Areas of Graphical Displays
Users should be able to cut both graphical objects and areas of a graphical display.[5908]

2.6.1-29 Viewing Text Prior to Pasting
Users should be able to view text that has been cut or copied prior to pasting.[5908]

2.6.1-30 Placing Cut Text in Compatible Files
Users should be able to insert copied text at any location in the current file or other files created with the same application.

Additional Information: One means of implementing this feature is a temporary editing buffer into which the system would place cut text.[5908]

2.6.1-31 Placement of Pasted Text
The pasted text should be inserted at the location immediately before the cursor (in a text file), or at the approximate location of the cursor (in a graphical file).
Additional Information: At the end of the paste process, the cursor should have the same text following it as before the process.[5908]

2.6.1-32 Pasting the Same Text More than Once
Pasting the most recently cut or copied text should have no effect on the users' ability to paste the same text again.
Additional Information: Users should be able to paste the most recently cut or copied text as many times as they choose. The text to be pasted is replaced only when new text is cut or copied.[5908]

2.6.1-33 Cutting Without a Gap in the Text
No gap should be left in the file at the point from which cut text was removed.
Additional Information: The cursor should remain in the same location as it was prior to the cut.[5908]

2.6.1-34 Storing Frequently Used Text
Users should be allowed to label and store frequently used text segments, and to later recall (copy into current text) stored segments identified by their assigned labels.
Additional Information: For example, much text processing involves repetitive elements specific to different applications, such as signature blocks, technical terms, long names, formulas, or equations.[5908]

2.6.1-35 Vertical Scrolling When Selecting Text
If the selected text, table, or graphics area extends beyond the bottom of the displayed page, the screen should automatically scroll until the user stops selecting or when the end of the display page is reached.[5908]

2.6.1-36 Non-Contiguous Blocks of Text
Users should not be able to select non-contiguous blocks of text when copying, cutting, or pasting.
Additional Information: Cutting and pasting (operations which frequently follow selecting) is ambiguous with non-contiguous blocks, especially with respect to the spatial relation between the two non-contiguous blocks when they are pasted into a text file at a new location or into a new text file.[5908]

2.6.2-1 Saving to a Data File

The user should be able to save the information entered into a file by a single action that will permit the user to continue interacting with that file.
Additional Information: This action replaces the previous information stored in the file with the newly saved information.[5908]

2.6.2-2 Exit With Save

After finishing the interaction with any type of file, the user should be able to save the information and stop interacting with the file by a single action.[5908]

2.6.2-3 Exiting a File

After finishing the interaction with any type of file, the user should be able to stop interacting with the file by a single action (e.g., selecting a menu item) without saving the changes to the file.
Additional Information: Commands for exiting are different from those for saving and exiting with a save.[5908]

2.6.2-4 Distinct Commands for Exit With and Without Save

The command used to "exit with save" should differ from the commands for "save" (without exit) and for "exit without save."
Additional Information: Systems with a single 'exit' command typically protect against exiting without saving by prompting the user to save whenever 'exit' is invoked while there are unsaved changes, and requiring an explicit 'exit without save' choice; see Guideline 2.6.2-5.[5908]

2.6.2-5 Protection Against Exiting a File Without Saving

The user should be protected against exiting a file without the opportunity to save the file contents.
Additional Information: The system should require users to verify that they want to exit and lose their most recent inputs.[5908]

2.6.2-6 Recovery of Replaced File

Information from a file that has been modified and stored with the "save" or "exit with save" actions should be retrievable with a simple action.[5908]

2.6.2-7 Automatic Saving of a File

The system should save a file automatically at frequent intervals while being edited.
Additional Information: Users should be aware of automatic file saving operations.[5908]

2.6.2-8 Automatic Backup

Users should have the option of invoking an automatic backup function that retains previous versions of files. The specific number of previous versions saved should be selectable by the user.[5908]

2.6.2-9 Access of Modified Information After Exit Without Save

Information from a file that has been modified by new input should be retrievable with a single action even after exiting without saving new input.
Additional Information: The modified file is accessible for a period of time after the "exit" actions.[5908]

2.6.3-1 Automatic Placement of Cut Data in Buffer

When selected data is cut or copied from a text file, tabular file, and/or graphics file and placed in a temporary editing buffer, the data should be placed in the buffer automatically, with the only specific action required by the user being the cut or copy action.
Additional Information: If a temporary editing buffer is used, data pasted into a text file, tabular file, and/or graphics file is pasted from that buffer.[5908]

2.6.3-2 Contents of Temporary Buffer

The contents of the temporary editing buffer should remain intact after the application from which the contents were taken is closed.[5908]

2.6.3-3 Default Conditions of Buffer

The default condition should be that additions to the temporary editing buffer are not cumulative.
Additional Information: New data placed in the buffer replaces old data.[5908]

2.6.3-4 Access to Contents of Temporary Buffer

The user should be able to access the contents of the temporary editing buffer in a window with a single action.
Additional Information: Access to the contents of the temporary editing buffer permits the user to read the contents, but not operate on them.[5908]

2.6.4-1 Accessing Information Across Applications

The capability to accept and maintain information, independent of application, should be provided for holding relevant information across displays or applications.
Additional Information: An example of this capability is the scrapbook or excerpt file.[5908]

2.6.4-2 Excerpt File

Users should have the capability to create multiple excerpt files.[5908]

2.6.4-3 Integrating Data

The user should have the capability to integrate new data with data already in the excerpt file.
Additional Information: Integrating data might include (1) pasting the new data following data already in the file, (2) pasting the new data before data already in the file, and (3) interleaving new data in data already in the file. Each of these capabilities should be available through a single user action.[5908]

2.6.4-4 Copying Excerpt File

The user should be able to cut or copy data from the excerpt file and paste it to any other file.[5908]

2.6.4-5 Saving Excerpt File

The user should be able to save the excerpt file.[5908]

2 USER-INTERFACE INTERACTION AND MANAGEMENT
2.7 User Assistance
2.7.1 General

2.7.1-1 Standard Display Location
System messages should appear in standard locations.
Additional Information: Messages may be provided in window overlays.[5908]

2.7.1-2 Consistent Format for System Messages
Consistent grammatical construction should be used in system messages.[5908]

2.7.1-3 Familiar Wording
System messages should use familiar terminology.
Additional Information: For example, "Data requires special access code; call Data Base Admin, X 9999 for access" is preferable to "IMS/VS DBMS private data; see OP-DBSA-0/99-99."[5908]

2.7.1-4 Concise Wording of System Messages
System messages should be concise and clearly worded.[5908]

2.7.1-5 Speaking Directly to Users
Wording for system messages should be directed at the user.
Additional Information: For example, "Press ENTER to continue" is preferable to "The operator should press ENTER to continue."[5908]

2.7.1-6 Only Necessary Information Displayed
No extraneous information should be displayed.
Additional Information: Only relevant data to a task or operation should be displayed.[5908]

2.7.1-7 Anthropomorphism
Presenting the system as a person should be avoided.
Additional Information: System messages such as, "I AM LOADING YOUR FILE NOW. I'LL TELL YOU WHEN I'M DONE" should not be used.[5908]

2.7.1-8 User Control of Automated Guidance/Help
Experienced users should be able to define when and how guidance will be provided by automated guidance/help systems.
Additional Information: The type and degree of guidance needed from guidance/help systems varies with the level of expertise of the user. Less experienced users of the HSI should be provided with few options for controlling the presentation of guidance/help.[6546]

2.7.1-9 Content of Online Help
The content of help information should be oriented toward users' completion of their tasks; i.e., the information should be procedural.[6546]

2.7.1-10 Display of Online Help
The display of online help should not obscure important information.
Additional Information: Online help systems that are window-based can be beneficial because they present help information directly on the task display, allowing users can glance between the help and the task rather than referring to a separate manual or display. However, if multiple windows are already open, the presence of an additional help window may obscure important information.[6546]

2 USER-INTERFACE INTERACTION AND MANAGEMENT
2.7 User Assistance
2.7.1 General

2.7.1-11 Interaction Styles

Online help should accommodate users' differing levels of expertise and preferred interaction styles.
Additional Information: Users may vary in their proficiency and preferences in using some interface management techniques.[6546]

2.7.2-1 Distinctive and Consistent Advisory Messages

Advisory messages should be distinctive.
Additional Information: The salience of the message presentation should be appropriate to its content. For example, messages regarding potential data loss might be marked with a blinking symbol and/or displayed in red, and be accompanied by a distinct auditory signal (see Guideline 2.7.2-2). Error messages might be marked with a different special symbol and/or displayed in yellow.[5908]

2.7.2-2 Redundant Display

Important information should be presented through both visual and auditory means.
Additional Information: The visual display of important information should be redundant, using pictures, schematics, color, and text. Such information should be accompanied by an auditory alerting tone.[5908]

2.7.2-3 Informing Users of Potential Data Loss

Protection against data loss should be provided.
Additional Information: During logoff, the system should check pending transactions to determine if data loss seems probable. If so, the computer should prompt for confirmation before the logoff command is executed.[5908]

2.7.2-4 Time-consuming processes

Users should be informed when a command will be time-consuming to process.
Additional Information: Typical response times for various types of commands are given in Section 2.4.3, System Response Time. Advisory messages may be provided when response time will exceed the maximum amounts given.[5908]

2.7.3-1 Informative Error Messages

When the computer detects an entry error, an error message should be displayed stating the error and possible subsequent operations.
Additional Information: Error messages should explicitly provide as much diagnostic information and remedial direction as can be inferred reliably from the error condition. Where clear inference is not possible, probable helpful inference(s) may be offered. For example, "Code format not recognized; enter two letters, then three digits" is preferable to "Invalid input." Users should not have to search through reference information to translate error messages.[5908]

2.7.3-2 Task-Oriented Error Messages

Wording for error messages should be appropriate to the task.
Additional Information: Error messages should specifically describe the error and available remedies in language that reflects the user's point of view, not the programmer's. For example, "Trend Point number not recognized, check the number" is preferable to "Entry error - Status Flag 4."[5908]

2.7.3-3 Neutral Wording for Error Messages

Error messages should use neutral wording.
Additional Information: Error messages should not imply blame to the user, personalize the computer, or attempt to make a message humorous. For example, "Entry must be a number" is preferable to "Illegal entry" or "I need some digits."[5908]

2.7.3-4 Non-Disruptive Error Messages

The computer should display an error message only after completion of an entry.
Additional Information: An error message should not be generated as wrong data are keyed, but only after an explicit ENTER action has been taken.[5908]

2.7.3-5 Invalid Action

Where an entry is invalid or inoperative at the time of selection, no action should result except a display of an advisory message indicating the error and the appropriate functions, options, or commands.
Additional Information: For example, no action should occur when attempting to print a document from within an edit mode.[5908]

2.7.3-6 Advisory Error Messages

Where data or control entry is made from a small set of alternatives, error messages should indicate the correct alternatives.[5908]

2.7.3-7 Displaying Erroneous Entries

When an entry error has been detected, the erroneous entry should remain displayed until the error has been corrected.
Additional Information: The error itself will provide information as to the nature of the error. Displayed error messages should be removed after the error has been corrected.[5908]

2.7.3-8 Cursor Placement Following Error

In addition to providing an error message, the location of a detected error should be marked by positioning the cursor at that point on the display, i.e., at that data field or command word.
Additional Information: Displaying the cursor at a non-routine position will help emphasize that an error has occurred, and direct the user's attention to the faulty entry.[5908]

2.7.3-9 Indicating Repeated Errors

If a user repeats an error, a noticeable change should exist in the displayed error message.
Additional Information: The user may not be aware of the error if there is no change in the displayed message. In response to a repeated error, the system might display the same verbal message but with changing annotation.[5908]

2.7.3-10 Errors in Stacked Commands

If an error is detected in a group of entries, the system should process correct commands until the error is displayed.[5908]

2.7.3-11 Multilevel Error Messages

Following the output of a simple error message, users should be able to request a more detailed explanation of the error.
Additional Information: A more complete discussion of each error should be made available on-line.[5908]

2.7.3-12 Cautionary Messages

When a data or command entry error is suspected but cannot be determined (in terms of system error logic), a cautionary message asking for confirmation should be displayed.
Additional Information: The user should be alerted to entries that may be in error. For example, "Cooldown rate of 200 degrees per hour is outside the normal range; confirm or change entry."[5908]

2.7.3-13 Multiple Error Messages

Notification should be made for each error when multiple errors are detected.
Additional Information: The user should be made aware of the detection of multiple entries in order to facilitate corrections. For example, "DATE should be numeric [+ 2 other errors]." The computer should place the cursor in the data field referred to by the displayed error message, with other error fields highlighted. There should also be means to request sequential display of the other error messages.[5908]

2.7.3-14 Error Message Placement

Error messages should be presented at the point of the error or in a consistent area of the display.[5908]

2.7.3-15 Documenting Error Messages

As a supplement to on-line guidance, system documentation should include a listing and explanation of all error messages.[5908]

2.7.4-1 Automatic Data Validation
Automatic data validation should be provided to check any item whose entry and/or correct format or content is required for subsequent data processing.[5908]

2.7.4-2 Validation
Data entries should be validated by the system for correct format, legal value, or range of values. Where repetitive entry of data sets is required, data validation for each set should be completed before another transaction can begin.[5908]

2.7.4-3 Stroke-By-Stroke Echo
Data being entered through a keyboard should be echoed on the screen on a stroke-by-stroke basis, except when applied to passwords or other security measures.[5908]

2.7.4-4 System Validation
Where possible, when a command entry does not meet validation logic, a cautionary message should be displayed asking the user to confirm data entry.
Additional Information: For example, during reactivity control, the following type message may be displayed: "A negative value has been entered in the field 'Control Rods.' Please enter a positive number between 1 and 32."[5908]

2.7.4-5 Data Verification by User Review
When verification of prior data entries is required, users should be allowed to review and confirm the data, rather than re-entering the data.
Additional Information: For routine verification, data review by the user will be quicker than re-entry, with less risk of introducing new errors. For special verification, as when computer processing has detected doubtful and/or discrepant data entries, the user should be alerted with an appropriate advisory message.[5908]

2.7.4-6 Cross Validation of Related Data
For the entry of related data items, automatic cross validation should be provided to ensure that the data set is logically consistent.
Additional Information: Such cross checking is a significant advantage of on-line data processing, providing computer aids to help users detect logical errors.[5908]

2.7.4-7 Displaying Default Values
Currently operative default values should be displayed for data entry, so that users can review and confirm them for computer processing.[5908]

2.7.4-8 Non-Disruptive Error Messages
If data validation detects a probable error, an error message should be displayed to the user at the completion of data entry.
Additional Information: An ongoing transaction should not be interrupted.[5908]

2.7.4-9 Timely Validation of Sequential Transactions
In a repetitive data entry task, the data for each transaction should be validated as it is completed, and the user should be allowed to correct errors before beginning another transaction.

Additional Information: This is particularly important when the task requires transcription from source documents, so that a user can detect and correct entry errors while the relevant document is still at hand.[5908]

2.7.4-10 Optional Item-by-Item Validation
Optional item-by-item data validation within a multiple-entry transaction should be provided.
Additional Information: This capability, which might be termed an "interim ENTER," may sometimes help a novice user who is uncertain about the requirements imposed on each data item.[5908]

2.7.4-11 Deferral of Required Data Entry
If a user wishes to defer entry of a required data item, the user should be required to enter a special symbol in the data field to indicate that the item has been temporarily omitted rather than ignored.[5908]

2.7.4-12 Reminder of Deferred Entry
If a user has deferred entry of required data but then requests processing of entries, that omission should be signaled to the user, and immediate entry (or perhaps further deferral) of missing items should be allowed.[5908]

2.7.4-13 User Validation
The user should be able to obtain a paper copy (screen dump) of the contents of alphanumeric or graphic displays.[5908]

2.7.5-1 User Confirmation of Destructive Entries

When a control entry will cause any extensive change in stored information, procedures, and/or system operation, and particularly if that change cannot be easily reversed, the user should be notified and confirmation of the action should be required before implementing it.
Additional Information: What constitutes "potentially destructive" requires definition in the context of each system operation. When user entries or changes will be nullified by an abort action, the user should be requested to confirm the abort. Confirmation messages should be simple, positive, and direct.[5908]

2.7.5-2 Informing Users of Potential Information Loss

For conditions that may require special user attention to protect against information loss, an explicit alert and/or advisory message should be provided to prompt appropriate user action.
Additional Information: The prompt for a CONFIRM action should inform users explicitly of any possible data loss. For example, the message, "CONFIRM deletion of entire FEEDWATER file?" is preferable to "CONFIRM DELETE." If a complete file is to be deleted, sufficient information (e.g., name, description, size, date established, and data last changed), should be displayed to verify the file for deletion.[5908]

2.7.5-3 Preventing Data Loss at Logoff

When a user requests logoff, pending transactions should be checked and if any pending transaction will not be completed, or if data will be lost, an advisory message requesting user confirmation should be displayed.
Additional Information: A user may sometimes suppose that a job is done before taking necessary implementing actions.[5908]

2.7.5-4 Displaying Data to be Changed

If a user requests change (or deletion) of a stored data item that is not currently being displayed, both the old and new values should be displayed so that the user can confirm or nullify the change before the transaction is completed.
Additional Information: For proposed deletion of significant amounts of data, such as entire files, it probably will not be feasible to display all of the data. In such instances, sufficient information should be provided so that users can identify those files they have selected for deletion. The user should be clearly advised of the potential data loss and required to confirm the destructive action before it will be executed. This practice will tend to prevent inadvertent change, including changes resulting in loss of needed data. User attempts at selective data change without displayed feedback will be prone to error.[5908]

2.7.6-1 Protection from Computer Failure

Automatic measures should be provided to minimize data loss from computer failure.
Additional Information: An automatic capability is needed because users cannot be relied upon to remember to take necessary protective measures. Though not strictly a feature of user interface design, reliable data handling by the computer will do much to maintain user confidence in the system. Conversely, data loss resulting from computer failure will weaken user confidence, and reduce user acceptance where system use is optional. For example, depending upon the criticality of the application, different protective measures may be justified, including periodic automatic archiving of data files, maintenance of transaction logs for reconstruction of recent data changes, offsite storage of copies of operating software, or even provision of parallel "backup" computing facilities.[5908]

2.7.6-2 Protection from Interrupts

When a proposed user action will interrupt a current transaction sequence, automatic means to prevent data loss should be provided.
Additional Information: If potential data loss cannot be prevented, the user should be informed. Interrupts should not be permitted without user confirmation. Some interrupt actions such as BACKUP, CANCEL, or REVIEW, by their definition will cause only limited data change, and so need no special protection. However, if an interrupt action may cause extensive data change (e.g., RESTART, LOGOFF), then the user should be required to confirm that action before processing. If a user should interrupt a series of changes to a data file, then the computer might automatically save both the original and the changed versions of that file for subsequent user review and disposition.[5908]

2.7.6-3 Protection from Data Change

When information must not be changed, users should not be permitted to change controlled items.
Additional Information: It is not enough simply to instruct users not to make changes in displayed information. Setpoints specified in plant technical specifications are an example of information that must not be changed.[5908]

2.7.6-4 Explicit Action to Select Destructive Modes

Users should take explicit action to select any mode of interaction that might result in data loss.
Additional Information: Destructive modes should not be established automatically. In many applications, it may be better not to provide any destructive mode. Instead of providing a DELETE mode, for example, require that DELETE be a discrete action subject to confirmation by the user when the requested data deletion is extensive.[5908]

2.7.6-5 Safe Defaults

If automatic defaults are provided for control entries, those defaults should protect against data loss, or at least not contribute to the risk of data loss.
Additional Information: For example, when printout of filed data is requested, one control option might be to delete that file after printing. The default value for such a destructive option should automatically be set to NO whenever the printing options are presented to a user for selection.[5908]

2.7.6-6 Protecting Physical Controls

If activation of function keys (and other control devices) may result in data loss, they should be located separately and/or physically protected to reduce the likelihood of accidental activation.[5908]

2.7.6-7 Disabling Unneeded Controls

When function keys and other devices are not needed for current control entry, and especially when they may have destructive effects, they should be temporarily disabled by the software so that they cannot be activated by a user.

Additional Information: Some means should also be provided to help users distinguish currently active from disabled controls, such as brightening (active) or dimming (disabled) their associated labels. If labeling is adequate, then user selection of a disabled control need produce no response. If adequate labeling cannot be provided, then user selection of a disabled control should produce an advisory message that the control is not currently active.[5908]

2.7.6-8 Distinctive File Names

When data files may be deleted (or overwritten) by name, the file names assigned by the system should be distinctive.[5908]

2.7.6-9 Feedback for Mode Selection

When the result of user actions will be contingent upon prior selection among differently defined modes of interaction, a continuous indication of the current mode should be provided, particularly when user inputs in that mode might result in data loss.

Additional Information: A user cannot be relied upon to remember prior actions. Thus, any action whose results are contingent upon previous actions can represent a potential threat to data protection. For example, if a DELETE mode is being used to edit displayed data, some indication of that mode should be continuously displayed to the user.[5908]

2.7.6-10 Protection from Interference by Other Users

Data should be protected from inadvertent loss caused by the actions of other users.

Additional Information: When one user's actions can be interrupted by another user, that interruption should be temporary and nondestructive. The interrupted user should subsequently be able to resume operation at the point of interruption without data loss. When multiple users review, enter, or modify data in a system, they should be able to review and browse data changes or entries made by other users. In systems where information handling requires the coordinated action of multiple users, it may be appropriate that one user can change data that will be used by others. However, when multiple users will act independently, then care should be taken to ensure that they will not interfere with one another.[5908]

2.7.6-11 Segregating Real from Simulated Data

When simulated data and system functions are displayed or provided (perhaps for user training), real data should be protected and real system use should be clearly distinguished from simulated operations.[5908]

2.7.6-12 Data Entry/Change Transaction Records

In situations where unauthorized data changes may be possible, users (or a system administrator) should be able to request a record of data entry/change transactions.

Additional Information: Transaction records might be maintained for purposes of user guidance as well as for data protection.[5908]

2.7.7-1 Acknowledging Corrections

All error corrections by the user should be acknowledged by the system, either by indicating a correct entry has been made or by another error message.[5908]

2.7.7-2 UNDO to Reverse Control Actions

Any user action should be immediately reversible by an UNDO command.
Additional Information: UNDO itself should be reversible, so that a second UNDO action will do again whatever was just undone. Even with an UNDO capability, however, a user may make an irretrievable mistake, if succeeding actions intervene before a prior destructive action is noticed. If a user is too hasty in confirming a destructive action, and realizes the mistake right away (i.e., before taking another action), then an UNDO action might be taken to reverse the damage.[5908]

2.7.7-3 User Review and Editing of Entries

For all inputs, whether data entries or commands, users should be allowed to edit composed material before requesting computer processing.
Additional Information: Input editing will allow users to correct many errors before computer processing. When an error is detected, a user will be able to fix it by editing, i.e., without having to retype any correct items (which might introduce further errors).[5908]

2.7.7-4 Immediate Error Correction

When the system detects an error in a user input, the user should be allowed to make an immediate correction.
Additional Information: It is helpful to correct data entry errors at the source, i.e., while a user still has the entry in mind and/or source documents at hand. When a user cannot correct an entry, as when transcribing from a source document that itself contains an error, it may help to allow the user to defer entry of the wrong item. Alternatively, the user might wish to cancel the transaction.[5908]

2.7.7-5 Editing Entries After Error Detection

Following error detection, users should be allowed to edit entries by rekeying only those portions that were in error.
Additional Information: If a user must re-enter an entire data set to correct one wrong item, new errors may be made in previously correct items.[5908]

2.7.7-6 Explicit Entry of Corrections

Users should be required to take an explicit ENTER action for computer processing of error corrections.
Additional Information: The action taken to accomplish corrections should be the same action that was taken to enter the data originally.[5908]

2.7.7-7 Automated Correction Aid

When inappropriate or unrecognized commands are detected, a list should be provided to the user showing permissible commands, anticipating the command intended.[5908]

2.7.7-8 Flexible BACKUP for Error Correction

Users should be allowed to BACKUP easily to previous steps in a transaction sequence in order to correct an error or make any other desired change.

Additional Information: For example, a user might wish to BACKUP through the defined sequence of a question-and-answer dialogue in order to change a previous answer.[5908]

2.7.7-9 Errors in Stacked Commands
If an error is detected in a stacked series of command entries, the computer should either consistently execute to the point of error, or else consistently require users to correct errors before executing any command.
Additional Information: In most applications, partial execution will probably prove desirable. The point here is that an interface design decision should be made and then followed consistently.[5908]

2.7.7-10 Partial Execution of Stacked Commands
If only a portion of a stacked command can be executed, the user should be notified and provided appropriate guidance to permit correction, completion, or cancellation of the stacked command.
Additional Information: Note that stacked commands can fail because of error in their composition, or for other reasons such as unavailability of required data.[5908]

2.7.7-11 Replacing Erroneous Commands
If a user makes a command entry error, after the error message has been displayed, the user should be allowed to enter a new command.
Additional Information: A user should not be forced to correct and complete an erroneous command. In considering a command entry error message, a user may decide that the wrong command was chosen in the first place, and wish to substitute another command instead.[5908]

2.7.7-12 Correcting Command Entry Errors
If a command entry is not recognized, the user should be allowed to revise the command rather than rejecting the command outright.
Additional Information: Misstated commands should not simply be rejected. Instead, software logic should guide users toward proper command formulation.[5908]

2.7.8-1 On-Line Guidance
Reference material describing system capabilities, procedures, and commands and abbreviations, should be available on-line.
Additional Information: Design of user guidance should be consistent with system security restrictions.[5908]

2.7.8-2 Access to Guidance
Explicit actions should be required to access or suppress user guidance.[5908]

2.7.8-3 HELP Request
At any point in an interaction, users should be able to access on-line user guidance by means of a simple action that is consistent throughout the interface.
Additional Information: Users should have multiple methods of requesting help. For example, a user might (1) select Help in a pull-down menu, (2) type a "Help" command, and/or (3) press a Help Function Key.[5908]

2.7.8-4 HELP Guidance
Advisory messages or prompts should be available to guide users in accessing help messages.
Additional Information: An on-line HELP index should be provided.[5908]

2.7.8-5 Synonyms for Standard Terminology
When a user requests HELP on a topic, the computer should accept synonyms and abbreviations.[5908]

2.7.8-6 Context-Sensitive HELP
The information presented in response to a HELP request should be tailored to the task context.
Additional Information: If an error in command entry is made, HELP should display information concerning that command, its function, its proper structure and wording, and required and optional parameters.[5908]

2.7.8-7 Clarifying HELP Requests
When a request for HELP is ambiguous in context, the computer should initiate a dialogue to specify what data, message, or command requires explanation.
Additional Information: In order to define the needed information, the user might be allowed to point at a displayed item about which HELP then would be provided.[5908]

2.7.8-8 Multilevel HELP
When a HELP display provides summary information, more detailed explanations should be available.[5908]

2.7.8-9 Browsing HELP
Users should be able to browse on-line HELP.[5908]

2.7.8-10 Return from HELP
The user should be able to easily return to the task after accessing HELP.[5908]

2.7.8-11 Hardcopy Procedures
A complete hardcopy set of computer system operating procedures and contingency procedures should be available in the control room.

2 USER-INTERFACE INTERACTION AND MANAGEMENT
2.7 User Assistance
2.7.8 User Guidance/Help

Additional Information: Operating procedures should describe the overall computer system, the components with which the user can interface, and the specific procedures necessary to accomplish all of the user-computer interface functions. Contingency procedures should describe indications available to the user which identify failure or malfunctioning of the computer system and necessary actions to be performed by the user if the computer fails or malfunctions.[0700]

2.7.8-12 Computer System Procedures
Procedures should be prepared from the point of view of the user.[0700]

2.7.8-13 Display Indices
Cross-indices of the available data displays should be available in the control room in hardcopy form.
Additional Information: The specific codes, or addresses, by which data displays can be called up by a user should be cross-indexed by alphanumeric or numeric code, program name, system/subsystem identification, and functional group identification.[0700]

2.8-1 Appropriate Use of HSI Flexibility Features

Flexible HSI features should be provided when they provide specific benefits to user tasks and their use does not impair user performance.

Additional Information: User performance may be impaired by an excessive number of flexibility features or inadequately designed flexibility features that create demands that compete with primary tasks. Inadequately designed flexibility features can also expose the user to HSI configurations that violate human factors engineering principles and may increase the likelihood of errors and poorer task performance. Table 2.6 lists some uses of HSI flexibility that may enhance performance.[6546]

Table 2.6 Uses of HSI flexibility

Reduce the Cost of Accessing Information – Flexible HSI capabilities can reduce the attention and effort required for accessing information. The flexibility of computer-based technologies can enhance operator performance by allowing the HSI to provide the right information for the operator's current work methods and work objectives, while removing unneeded information that may become a nuisance. Examples include: automated information retrieval features; programmable function keys for accessing particular displays; capabilities for organizing information (i.e., display window management, spatial arrangement of icons); and capabilities for introducing labels, markers, or landmarks to support operators in locating information in displays that require visual scanning.
Reduce the Cost of Processing and Integrating Information – Flexible HSI capabilities can support operators in mentally processing and integrating information presented by the HSI. Examples of HSI features for arranging the spatial proximity of information to aid mental integration include: the physical movement of display devices, the movement of display pages to particular display devices, and the movement of display pages within display windows. Examples of HSI features for supporting users interpreting information include reconfigurable displays, such as graphical plots in which an operator may plot one variable as a function of another or as a function of time, and features that perform calculations requested by the operator.
Reduce the Cost of Executing Control Actions – Flexible HSI capabilities can reduce the effort and attention required for executing control actions. Examples include HSI features that allow particular control actions to be executed automatically. Other examples include: "escape mechanisms" features, which allow to the operator to promptly terminate and exist complicated human-system interactions, and "workarounds," which allow the user to override automatic responses that may not be beneficial for a particular task.
Enhance Signals – This capability increases the salience of an indication or piece of information to support detection by operators. These changes in salience effectively increase the signal-to-noise ratio for specific information.
Reduce Noise – This capability reduces or removes "noise" from the information environment to support the operator in detecting relevant information. This removal or reduction of noise effectively increases the signal-to-noise ratio for other information that may be more important. Noise may include indications of plant or system changes that do not provide information that is useful to the operator's current tasks.
Document a Baseline or Trend – This capability allows the operator to create a referent for monitoring so that changes can be easily identified without relying upon the operator's memory of the previous state. Examples include capabilities for documenting initial conditions or for establishing a trend over a period of time for comparison at some later time.
Create External Reminders – This capability allows the operator to create reminders for activities involved in monitoring or control execution. Reminders for monitoring activities may identify particular variables requiring close attention. Reminders for control actions may remind operators of special conditions important when carrying-out control actions. For example, operators may create reminders regarding unusual control configurations that should not be changed or to draw attention to unusual indications that are already being addressed in other ways. These reminders may be created through manipulations of the appearance of the HSI component or through the creation of messages.

2.8-2 Design for User Requirements

Users should not have to use flexible interface features to support tasks and circumstances that could have been anticipated and designed for.

Additional Information: The flexible user interface features provided should be the result of careful analyses of user requirements. A flexible user interface feature should address the need to optimize performance under specific conditions. They should not be a substitute for analyses of user requirements. Flexibility without proper analysis can expose the user to configurations that may impair performance, such as by increasing the likelihood of errors or delays.[6546]

2.8-3 Scope of Flexibility

The system should be sufficiently flexible to enable users to respond to unanticipated situations or where personal preference can positively impact performance.

Additional Information: Users should be able to develop novel information displays for unusual circumstances.[6546]

2.8-4 Limits to Flexibility

Users' flexibility in configuring the interface should not be unlimited.

Additional Information: Flexibility should be constrained so that working with the system does not become a complex decision-making task. The options provided to be user for configuring the interface should be well defined.[6546]

2.8-5 Default Configuration and HSI Flexibility Features

Displays that can be modified by users should provide a means for the user to rapidly return the display to its default configuration.[6546]

2.8-6 Changes to Display Characteristics

Users should not be able to change display characteristics that have been specifically designed to convey information important to their tasks.

Additional Information: The HSI may allow users to change or adjust some characteristics of the HSI, if these changes will enhance personnel performance. However, users should not be able to change display characteristics that have been specifically designed to convey important information, such as coding schemes. Examples for graphical elements include size, shape, and color codes for icons, symbols, borders, lines, and arrows. Examples for text elements include font characteristics (e.g., size, style, and color), abbreviations and acronyms for messages and labels.[6546]

2.8-7 User Expertise and HSI Flexibility Features

The design of flexible HSI features should provide capabilities that are consistent with the levels of expertise of the users.

Additional Information: User needs are typically different for different levels of expertise. Users who have limited exposure to the advanced capabilities of computer-based HSI components may require a high degree of support for interface management actions, such as through the use of menu-based systems and computer-based help features. Users who are highly proficient in the use of the HSI may require features that limit the number of steps required to complete an action, such as via a command-based interface rather than a menu-based interface.[6546]

2.9.1-1 Automated Security Measures

When required, automated measures to protect data security should be provided, relying on computer capabilities rather than on more fallible human procedures.

Additional Information: For protection against unauthorized users, who may be intruders in a system, the need for automated security measures is clear. For legitimate users, the need for data protection is to minimize data loss resulting from potentially destructive equipment failures and user errors. Even careful, conscientious users will sometimes make mistakes, and user interface logic should be designed to help mitigate the consequences of those mistakes.[5908]

2.9.1-2 Notification of Threats to Security

Messages or signals should be provided in order to notify users (and system administrators) of potential threats to data security (i.e., of attempted intrusion by unauthorized users).

Additional Information: For protecting data from unauthorized use, it may not be enough merely to resist intrusion. It may also be helpful if the computer can detect and report any intrusion attempts. In the face of persistent intrusion attempts, it may be desirable to institute countermeasures of some sort, such as changing user passwords or establishing other more stringent user authentication procedures.[5908]

2.9.1-3 Auxiliary Tests to Authenticate User Identity

When system security requires more stringent user identification than is provided by password entry, auxiliary tests should be devised that authenticate user identity without imposing impractical demands on the user's memory.[5908]

2.9.1-4 Easy Logon

The logon process and procedures for user identification should be as simple as possible, consistent with protecting the system and associated data.

Additional Information: The logon process should provide prompts for all user entries, including passwords and/or whatever other data are required to confirm user identity and to authorize access to the system. Authentication of user identity is generally not enhanced by requiring a user to enter routine data such as terminal, telephone, office, or project numbers. In most organizations, those data can readily be obtained by other people. If verification of those data is needed, the user should be asked to review and confirm currently stored values in a supplementary procedure following logon.[5908]

2.9.1-5 Private Entry of Passwords

When a password must be entered by a user, password entry should not be displayed.

Additional Information: Covert entry of passwords will prevent casual eavesdropping by onlookers. This represents an exception to the general recommendation that all entries should be displayed. Special characters (e.g., * or #) may be displayed with each keystroke rather than the actual characters being entered. Alternatively, blanks may be displayed accompanied by an audio cue (e.g., a click or beep) for keystroke feedback.[5908]

2.9.1-6 User Choice of Passwords

When passwords are required, users should be allowed to choose their own passwords and to change their passwords as needed.

Additional Information: Where data protection is critical, user selected passwords should be tested against a list of common passwords (for example, "me," car types, names spelled backwards "nhoj," or birth dates). A password chosen by a user will generally be easier for that individual to remember. Security is enhanced if users are readily able to change their passwords, e.g., a user may suspect that a password has been disclosed, and thus may wish to change it.[5908]

2.9.1-7 Limiting Unsuccessful Logon Attempts
A maximum limit on the number and rate of unsuccessful logon attempts should be imposed.
Additional Information: These limits should provide a margin for user error while protecting the system from persistent attempts at illegitimate access. A record of continuing failure by any particular user to complete successful logon procedures, including password entry and other tests of claimed user identity, may indicate persistent intrusion attempts or lack of fitness for duty. Thus, repeated logon failures might be grounds for denying access to that user. Access might be denied temporarily for some computer-imposed time interval, or indefinitely, pending review by a system administrator. Legitimate users will sometimes have difficulty completing a successful logon, perhaps due to inattention, or a faulty terminal, or faulty communications. Occasional logon failures of that kind should be tolerable to the system, with the user simply invited to try again.[5908]

2.9.1-8 Continuous Recognition of User Identity
Once a user's identity has been authenticated, any authorized data access/change privileges are for that user should continue throughout a work session.
Additional Information: If an identified user is required to take separate actions to authenticate data handling transactions, such as accessing particularly sensitive files or issuing particular commands, the efficiency of system operations may be degraded. Where continuous verification of user identity seems required for data protection, some automatic means of identification might be employed for that purpose.[5908]

2.9.1-9 Single Authorization for Data Entry/Change
User authorization should be established at initial logon.[5908]

2.9.1-10 Logging On
When users must log on to a system, logon should be a separate procedure that is completed before a user may select any operational options.[5908]

2.9.1-11 Logon Frame
The logon frame should appear as soon as possible on the display with no additional user involvement.[5908]

2.9.1-12 Logon Delays
Logon delays should be accompanied by an advisory message to tell the user its current status and when the system will become available.[5908]

2.9.1-13 Immediate Start of Productive Work
After completing the logon process, the user should be able to start productive work immediately.[5908]

2.9.1-14 Logging Off
If there are pending actions and the user requests a logoff, the system should inform the user that these actions will be lost and allow the user to cancel either the pending actions or the logoff.[5908]

2.9.1-15 Saving Open Files in Automatic Logoff

Where possible, in the event of automatic logoff, open files should be saved to some defined file name.
Additional Information: For example, by concatenation of User's Name + Date.[5908]

2.9.1-16 Automatic Logoff

Interactive timesharing systems should allow some specified time between keyboard actions before automatic logoff unless a longer period is requested by the user.[5908]

2.9.1-17 Audible Signal for Automatic Logoff

An audible signal should be presented at specified intervals prior to automatic logoff.[5908]

2.9.2-1 Encryption

When sensitive data may be exposed to unauthorized access, a capability for encrypting those data should be provided.

Additional Information: Since potential exposure may be assumed during any external data transmission, encryption should be imposed routinely by the computer. Users should not be relied upon to request encryption. For protection of data within a shared system, a user might choose to encrypt private files to prevent their reading by other people. In such a case, the user must specify a private encryption "key," which will then serve as the basis for automatic encryption by the computer.[5908]

2.9.2-2 Ensuring Reversible Encryption

Encrypted data should be protected from any change that might prevent successful reversal of their encryption.[5908]

2.9.2-3 Displayed Security Classification

When displayed data are classified for security purposes, a prominent indication of security classification should be included in each display.

Additional Information: Where a display includes partitioned "windows" of data from different sources, it may be necessary to label security classification separately for each window. Under those conditions, some form of auxiliary coding (e.g., color coding) might help users distinguish a window that contains data at a high security level. This practice will serve to remind users of the need to protect classified data, both in access to the display itself and in any further dissemination of displayed data.[5908]

2.9.2-4 Display Suppression for Security

When confidential information is displayed at a workstation that might be viewed by casual onlookers, the user should be provided with some rapid means of temporarily suppressing a current display if its privacy is threatened, and then resuming work later.

Additional Information: A suppressed display should not be entirely blank, but should contain an appropriate message indicating its current status, e.g., "Display is temporarily suppressed; enter password to resume work." Such a capability is sometimes called a "security pause." For quick display suppression, a function key might be provided. To retrieve a suppressed display and resume work, a user might be required to make a code entry such as a password, in the interests of data protection.[5908]

2.9.2-5 Protecting Printed Data

As required for security, procedures to control access to printed data should be established, rather than simply prohibiting the printing of sensitive data.

Additional Information: User requirements for printed data are often unpredictable, and printing restrictions may handicap task performance. Rather than restrict printing, establish appropriate procedures for restricting further distribution of data printouts.[5908]

2.9.2-6 Protecting Display Formats

Display formatting features, such as field labels and delimiters, should be protected from accidental change by users.

Additional Information: In many data entry tasks, users will be allowed to change data fields but should be prevented from making any structural changes to the display. In applications where a user may have to create or modify display formats, special control actions should be provided for that purpose.[5908]

2.9.2-7 Protecting Displayed Data

When protection of displayed data is essential, computer control over the display should be maintained.
Additional Information: It is not enough simply to instruct users not to make changes in displayed data. Users may attempt unwanted changes by mistake, or for curiosity, or perhaps even to subvert the system.[5908]

2.9.2-8 Indicating 'Read-Only' Displays

When users are not authorized to change displayed data, "read-only" status should be indicated on the display.
Additional Information: In applications where the use of read-only displays is common, some simple cue in the display header may suffice to indicate that status. In applications where users can usually make additions and/or corrections to displayed data, any exception to that practice may confuse a user and so should be noted more prominently on the display.[5908]

2.9.2-9 Automatic Records of Data Access

When records of data access are necessary, the records should be maintained automatically.
Additional Information: Transaction records and logs should be stamped with user identifiers, time, and date. Provisions should be made to control requests for records and logs of data transactions with classified material. Users should be informed concerning the nature and purpose of automated recording of individual actions. Even cooperative, well-intentioned users can forget to keep manual logs of data access, and will resent the time and effort required to keep such logs. Subversive users, of course, cannot be expected to provide accurate records.[5908]

SECTION 3: CONTROLS

3 CONTROLS

Controls are the devices through which personnel interact with the HSI and the plant, including computer-input devices and conventional controls. Each is described below. General design and coding principles that apply to all controls are given in Section 3.1. Soft controls are treated as an HSI system (see Section 7) because they have display, interactions, and control components.

COMPUTER-BASED INPUT DEVICES

Input devices are devices used to provide input to computer-based systems. The following input devices are frequently used in computer-based systems:

Alphanumeric keyboards

These are keypads containing alphabetic and numeric characters. The user presses these keys to form commands or to enter data. Review guidelines for alphanumeric keyboards are presented in Section 3.2.1.

Function keys

This refers to the physical keys of a keyboard or keypad that are used to initiate a particular, dedicated function. Review guidelines for function keys are presented in Section 3.2.2. (The user-system interaction characteristics of function keys are addressed in Section 2.)

Trackballs, Joysticks, and Mice

These are indirect pointing devices in the sense that their movement at one location causes the cursor to move at a separate location – the display screen. A trackball is a device that allows the user to control the cursor's movement in any direction by rotating a ball. A joystick is a stick-type device that can provide continuous control of the cursor in any direction on a display screen. A mouse is a device whose movements across a flat surface are converted into analogous movements of the cursor across the screen. Review guidelines for trackballs, joysticks, and mice are presented in Section 3.2.3.

Touchscreens, Light Pens, and Graphics Tablets

These are direct pointing devices in that they allow the user to select information directly from a display screen. A touch screen is a device whereby user can communicate with the computer by touching a screen. A light pen is a pencil- or pen-like device that interacts with the computer system through the display device screen by either emitting or sensing light. A graphics tablet (also called a digitizing tablet) is a device that converts an image into digital code by drawing or tracing with a pen-like or puck-like instrument. The instrument is moved across the tablet, generating a series of X-Y coordinates. Review guidelines for touchscreens, light pens, and graphics tablets are provided in Section 3.2.4.

Speech input devices

These devices allow the user to provide input in spoken form, which a computer then interprets as data or commands. A speech input system typically consists of a microphone (e.g., stationary or mounted to a headset), components for transmission (e.g., a cable or a wireless media), and a processing unit. Review guidelines for speech input are provided in Section 3.2.5.

CONVENTIONAL CONTROL DEVICES

Conventional controls are hardwired devices for providing control input. Each control typically has a single dedicated location in a control panel. Conventional controls usually have either discrete settings or a continuous range for adjustment. Those with discrete settings typically have one of two types of operation – momentary and latching. Momentary control returns to its original setting when released. A

latching control stays in position until operated again. The following are examples of conventional control devices:

Pushbutton controls

These are buttons that generate a signal when they are pressed with the finger or hand. Their shape (e.g., round or square), size, and texture may vary. Legend pushbuttons are illuminated by internal lamps; their faces may contain alphanumeric text. Review guidelines for pushbutton controls are provided in Section 3.3.1.

Rotary controls

These controls are operated with a rotary motion. They include knobs, dials, J-handle controls, key-operated controls, continuous adjustment controls, and rotary selector controls. Review guidelines for rotary controls are provided in Section 3.3.2.

Other Controls

Thumbwheels

These controls are wheels that are turned by running the thumb or finger across their surface. Review guidelines for thumbwheels are provided in Section 3.3.3.1.

Slide switches

These controls are operated by sliding a knob linearly in the horizontal or vertical direction. Review guidelines for slide switches are provided in Section 3.3.3.2.

Toggle switches

These are stemmed switches that the user can move to discrete settings. Review guidelines for toggle switches are provided in Section 3.3.3.3.

Rocker switches

These switches have nearly flat faces and can be moved by the user to discrete settings. Review guidelines for rocker switches are provided in Section 3.3.3.4.

3 CONTROLS
3.1 General Control Guidelines
3.1.1 Design Principles

3.1.1-1 Appropriate Use of Input Devices
Input and control devices provided for interacting with the HSI should be appropriate for the user's task requirements.
Additional Information: Control/input devices and conditions for their appropriate use are listed in Table 3.1.[5908]

Table 3.1 Control and input devices for human-computer interaction

Control/Input Device	Conditions for Appropriate Use
Cursor Control Keys	Moving cursor in X and Y dimensions
Touch Screen	Moving/holding arm to screen for long periods of time is not required Screen does not have small poke points relative to size of finger tip A low level of resolution is required for positioning Task will not be disrupted by hand temporarily blocking screen Periodic cleaning of screen is provided
Light Pen	High positioning precision is not required Holding arm to screen for long periods of time is not required
Mouse	Adequate space is available for mouse movement over a pad or desktop A low to medium level of resolution is required for positioning Periodic cleaning is provided
Isotonic Joystick (Displacement)	Positioning accuracy is more important that positioning speed
Trackball	Rapid cursor positioning is desirable Limited space is available for installing an input device
Graphics Tablet	A low to medium level of resolution is required
Isometric Joystick (Force)	Precise or continuous control of two or more related dimensions is required

3.1.1-2 Input Device Stability
Input and control devices should be stable during normal usage, i.e., they should not slip or rock, unless such actions are a part of the controller operation.[5908]

3.1.1-3 Feedback
Visual or auditory feedback should be provided to indicate that the system has received a control input.
Additional Information: This is especially important when the control surface does not depress or move (such as with a force joystick or touchscreen), thereby providing little tactile feedback to the user.[5908]

3.1.1-4 Accidental Input or Actuation Prevention

The system should be located and designed to prevent the accidental manipulation of control and input devices that could result in changes to the status of the system functions, components, or data.
Additional Information: Controls may be recessed, shielded, or otherwise surrounded by physical barriers. The control should be entirely contained within the envelope described by the recess or barrier. Controls may be covered or guarded with movable (e.g., hinged) barriers. Safety or lock wires should not be used. When a movable control guard is in the open position, it should not interfere with the operation of the guarded control or other adjacent controls. Conventional controls may be provided with interlocks. The interlocking controls may require: (1) extra movement (e.g., a side movement out of a detent position or a pull-to-engage clutch), or (2) prior operation of a related or locking control.[5908, 0700]

3.1.1-5 Location

Controls should be operable from the location where the user is most likely to need to interact with the system.[0700]

3.1.1-6 Speed

Controls should provide rapid positioning of cursors or selection of choices.[0700]

3.1.1-7 Accuracy

The accuracy of the control device or method should be commensurate with the functions to be served.[0700]

3.1.1-8 Displacement

Control design should allow the user freedom of movement to perform other duties.[0700]

3.1.1-9 Range and Precision

Control should provide the sufficient range and precision required by the task.[0700]

3.1.1-10 Economy

Each control or input device should be necessary, use minimal space, and be the simplest effective control for the task concerned.
Additional Information: There should be a good reason to require a control for the function concerned. Duplication of controls should not occur, except for a specific reason. The precision and range of a control should not greatly exceed the need.[0700]

3.1.1-11 Human Suitability

Controls and input devices should be suitable for use in a control room environment.
Additional Information: Controls and input devices should be suited to the anthropometric and ergonometric characteristics of the expected user population. Each should be recognizable in terms of its function and should be of the type normally anticipated for the operation concerned. This means conforming to user expectations, matching to other devices having similar functions, and generally conforming to conventional practice.[0700]

3.1.1-12 Compatibility with Emergency Gear

If used while wearing protective equipment (e.g., oxygen masks and protective gloves), controls and input devices should be easy to identify and activate, or use.[0700]

3.1.1-13 Durability

Controls and input devices should be sufficiently rugged to withstand normal and emergency use.

Additional Information: Each device should retain its appearance, "feel," and functional characteristics during its service life. Broken, chipped, or crumbled control surfaces should not ordinarily occur. Control knobs or handles should not rotate, slip, or move loosely on their shafts. No internal wear or breakage should occur which alters the "feel" or other sensory feedback of a control. Controls should not develop internal looseness, binding, or backlash.[0700]

3.1.1-14 Control Activation
Controls and input devices should require distinct or sustained effort for activation.
Additional Information: Conventional controls should be provided with resistance (e.g., friction or spring-loading). Activation of computer-displayed controls should require a separate action, distinct from pointing.[0700]

3.1.1-15 Sequential Activation
When a strict sequential activation is necessary, controls should be provided with locks to prevent the controls from passing through a position.
Additional Information: Movement to the next position should require a new control action.[0700]

3.1.1-16 Population Stereotypes
Control movements should conform to population stereotypes (see Figure 3.1).
Additional Information: The following are control movement stereotypes for the U.S. population: (1) On, start, run, open; Up, right, forward, clockwise, pull; (2) Off, stop, close; Down, left, backward, counterclockwise, push; (3) Right; Clockwise, right; (4) Left; Counterclockwise, left; (5) Raise; Up; (6) Lower; Down; (7) Increase; Forward, up, right, clockwise; (8) Decrease; Backward, down, left, counterclockwise.[0700]

3 CONTROLS
3.1 General Control Guidelines
3.1.1 Design Principles

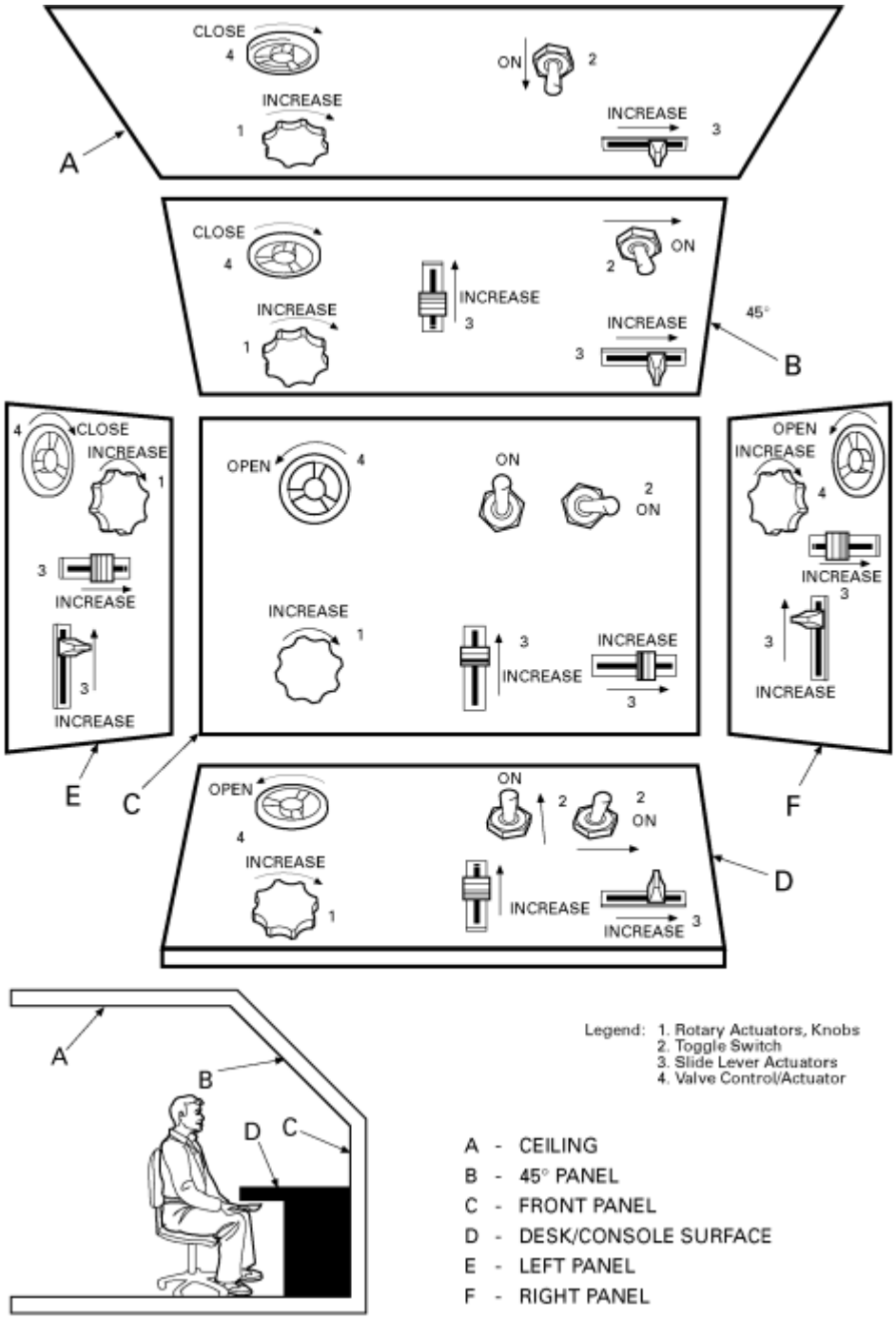

Figure 3.1 Control operation stereotypes for the U.S. population

3 CONTROLS
3.1 General Control Guidelines
3.1.2 Coding of Controls

3.1.2-1 Consistency
The coding system should be uniform throughout the control room.
Additional Information: Table 3.2 is provided as a general guideline for control coding evaluation.[0700]

3.1.2-2 Size Coding Levels
No more than three different sizes of controls should be used for discrimination by absolute size.
Additional Information: When knob diameter is used as a coding parameter, differences between diameters should be at least 0.5 inch. When knob thickness is a coding parameter, differences between thicknesses should be at least 0.4 inch.[0700]

3.1.2-3 Size Coding Uniformity
Controls used for performing the same function on different items of equipment should be the same size.[0700]

3.1.2-4 Shape Coding
When possible, controls should be differentiated by shape.
Additional Information: The shapes of conventional controls should be identifiable both visually and tactually to facilitate "blind" manipulation. When shape coding is used: (1) The coded feature should not interfere with ease of control manipulation; (2) Shapes should be identifiable by the hand regardless of the position and orientation of the control knob or handle; (3) Shapes should be tactually identifiable when gloves are worn; (4) A sufficient number of identifiable shapes should be provided to cover the expected number of controls that require tactual identification; (5) Shape-coded knobs and handles should be positively and non- reversibly attached to their shafts to preclude incorrect attachment when replacement is required; and (6) Shapes should be associated with or resemble control function, and not alternate functions.[0700, 1472]

3.1.2-5 Color Coding Contrast
The color of the control should contrast with the panel background.
Additional Information: See Table 1.3. Guidelines for color coding are given in Section 1.3.8, Color.[0700]

3.1.2-6 Color Coding Between Control and Display
When color coding is used to relate a control to its corresponding display, the same color should be used for both the control and the display.
Additional Information: Color coding should follow the recommendations of Section 1.3.8, Color.[0700]

3.1.2-7 Location Coding by Function
Controls should be located so as to be easily related to functions and functional groupings.
Additional Information: See Guideline 11.4.2-3.[0700]

3.1.2-8 Location Coding Across Panels
Controls with similar functions should be in the same location from panel to panel.
Additional Information: See Guideline 11.4.2-6.[0700]

Table 3.2 Advantages and disadvantages of various types of coding

Advantages	Type of Coding					
	Location	Shape	Size	Mode of Operation	Labeling	Color
Improves visual identification	X	X	X		X	X
Improves nonvisual identification (tactual and kinesthetic)	X	X	X	X		
Helps standardization	X	X	X	X	X	X
Aids identification under low levels of illumination and colored lighting	X	X	X	X	(when trans-illuminated)	(when trans-illuminated)
May aid in identifying control position (settings)		X		X	X	
Requires little (if any) training; is not subject to forgetting					X	

Disadvantages	Type of coding					
	Location	Shape	Size	Mode of Operation	Labeling	Color
May require extra space	X	X	X	X	X	
Affects manipulation of the use of the control (ease of use)	X	X	X	X		
Limited in number of available coding categories	X	X	X	X		X
May be less effective if operator wears gloves		X	X	X		
Controls must be viewed (i.e., must be within visual areas and with adequate illumination present)					X	X

3 CONTROLS
3.2 Input Devices
3.2.1 Alphanumeric Keyboards

3.2.1-1 General Keyboard Layout
An ANSI standard (QWERTY) layout should be used for the typing keyboard.
Additional Information: Common usage and the ability to transfer from one machine to another have led to the general acceptance of the QWERTY keyboard. Figure 3.2 illustrates the key arrangement.[5908]

Figure 3.2 Basic QWERTY keyboard layout

3.2.1-2 Numeric Keypad
When users must enter numeric data, keyboards should be equipped with a numeric keypad.[5908]

3.2.1-3 Numeric Keypad Layout
Keypads used for numeric entry should be consistently designed.
Additional Information: Keypad layout should be one of those illustrated in Figure 3.3.[5908]

3.2.1-4 Cursor Control Capability
Horizontal and vertical cursor control keys should be provided for text processing applications.
Additional Information: Ideally, keys for cursor control should allow (1) horizontal and vertical movement, (2) movement along the diagonals, and (3) two or more rates of movement that are user selectable. Cursor keys should be dedicated to cursor movement; that is, they should not be used for any function but cursor control. If, however, the cursor keys are not dedicated (i.e., they have collateral functions) their functional status should be clearly indicated.[5908]

3.2.1-5 Cursor Key Layout
Cursor control keys should be arranged in a two-dimensional layout so that their orientation is compatible with the cursor motion they produce.
Additional Information: Cursor keys may be arranged in a "box," "cross," or "inverted-T" format. Figure 3.4 illustrates these key arrangements.[5908]

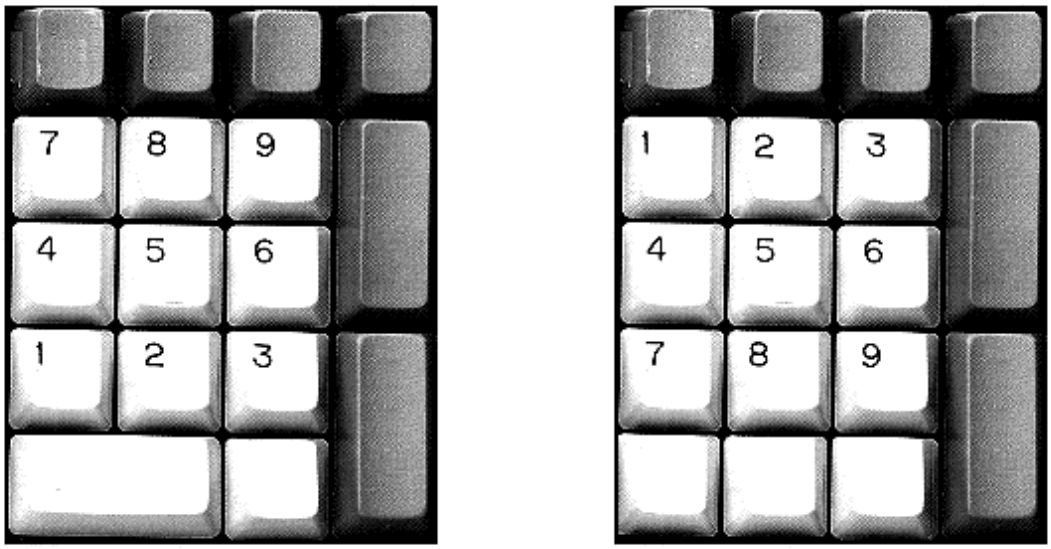

Figure 3.3 Numeric keypad layouts

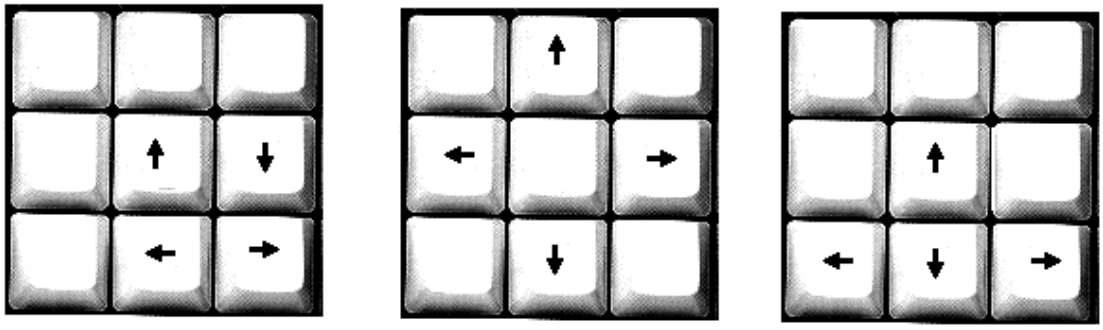

Figure 3.4 Cursor control key layouts

3.2.1-6 Overlays
Mechanical overlays, such as coverings over the keyboard, should be not used.[5908]

3.2.1-7 Keyboard Surfaces
A matte finish should be used for keyboard surfaces.
Additional Information: The spectacular reflectance (gloss) of key caps and visible surfaces should be 45 percent or less when measured with a 60-degree gloss instrument or equivalent device.[5908]

3.2.1-8 Keyboard Thickness
The thickness of the keyboard, i.e., base to the home row of keys, should be less than 2 inches (50 mm); 1.25 inches (30 mm) or less is preferred.[5908]

3.2.1-9 Keyboard Slope Adjustment
The slope of the keyboard should be adjustable by the user.
Additional Information: Keyboards should be capable of being positioned in slopes of 15 to 25 degrees from the horizontal.[5908]

3.2.1-10 Standard Keyboard Placement
The user should be able to reposition the standard keyboard on the worksurface.[5908]

3.2.1-11 Keytop Size
The minimum horizontal strike surface of the keytop should be at least 0.47 inches (12 mm) in width.
Additional Information: The keytop may be of any shape (e.g., square, round, or rectangular) provided spacing requirements are not violated.[5908]

3.2.1-12 Key Symbol Size and Contrast
The primary symbols on the keys should be a minimum of 0.1 inches (2.5 mm) in height and has a contrast ratio of 3:1.
Additional Information: Symbols on keys may be darker or lighter than the background.[5908]

3.2.1-13 Keytop Symbol Marking
Key symbols should be etched (to resist wear) and colored with high contrast lettering.
Additional Information: Keys should be labeled with a nonstylized font.[5908]

3.2.1-14 Key Spacing
Center line distances between adjacent keys should be between 0.71 and 0.75 inches (18 and 19 mm) horizontally and between 0.71 and 0.82 inches (18 and 21 mm) vertically.[5908]

3.2.1-15 Key Height
Key height for alphanumeric keyboards should be between 0.35 and 0.5 inches (10 and 13 mm).[5908]

3.2.1-16 Key Force
The maximum force required to depress keys should be between 0.9 and 5.4 ounces (0.25 and 1.5 N); a key force of between 1.8 and 2.2 ounces (0.5 and 0.6 N) is preferred.
Additional Information: The force required for key displacement should be 1.1 to 2.7 ounces (0.3 to 0.75 N) for repetitive keying tasks.[5908]

3.2.1-17 Key Displacement
Keys should have a maximum vertical displacement between 0.05 and 0.25 inches (1.5 mm and 6.0 mm); the preferred displacement is between 0.1 and 0.15 inches (2.0 and 4.0 mm).
Additional Information: Displacement variability between keys should be minimized.[5908]

3.2.1-18 Keying Feedback
The actuation of a key should be accompanied by tactile or auditory feedback or both.

Additional Information: If there is only one, tactile feedback is preferred. Should supplementary auditory feedback be used, the sound should occur at the same point in the displacement for all keys. Supplementary auditory feedback should be adjustable in volume and capable of being turned off.[5908]

3.2.1-19 Repeat Capability
A repeat capability for alphanumeric, symbol character, and cursor keys should be provided.
Additional Information: The repeat should have a user selectable delay with a default of 0.5 second. In addition, the character should be repeated at a user selectable rate with a default of 0.1 second. The physical release of the key should terminate the repeat.[5908]

3.2.1-20 Rapid Keystrokes
Rapid bursts of keystrokes should not result in characters to be lost or transmitted out of sequence.
Additional Information: Multiple-key (N-key) rollover capability reduces input errors by preserving the order in which keys are struck regardless of keys being depressed at the same time.[5908]

3.2.1-21 Keystroke Commands
When it is necessary to distinguish command entries from text input, a specially designated key should be one of the keys used for keystroke commands.[5908]

3.2.1-22 Simultaneous Keystrokes
Commands executed by chord-keying should require the user to press the keys simultaneously, not in close temporal sequence.
Additional Information: Requiring the user to press two keys simultaneously reduces the likelihood of inadvertent input of a command due to a missed keystroke that hits the specially designated key, followed immediately by another keystroke.[5908]

3.2.1-23 Inadvertent Operation
Keys with major or destructive effects should be located so that inadvertent operation is unlikely.[5908]

3.2.1-24 Alternate Key Definitions
When the keyboard is redefined, a display of the alternate characters and their locations should be available to the user.[5908]

3 CONTROLS
3.2 Input Devices
3.2.2 Function Keys

3.2.2-1 Availability
Fixed function keys should be available to control functions that are often utilized and continuously available.
Additional Information: Lockout of fixed function keys should be minimized.[5908]

3.2.2-2 Inactive Function Keys
Unneeded function keys, either fixed or programmable, should be disabled so that no other action occurs upon their depression except an advisory message.
Additional Information: At any step in a transaction sequence, function keys that are not used for current inputs should be temporarily disabled under computer control. Mechanical overlays should not be used for this purpose.[5908]

3.2.2-3 Inactive Keys
Non-active fixed function keys should not be present on the keyboard.
Additional Information: The presence of non-relevant keys, such as those used by programmers, adds to keyboard complexity, and induces user errors. Control room keyboards should contain only those keys used by control room personnel.[5908, 0700]

3.2.2-4 Grouping
Fixed function keys should be logically grouped and placed in distinctive locations on the keyboard.
Additional Information: Color-coding can be used to highlight functional key groups. When this is done, the color of alphanumeric keys should be neutral (e.g., beige or gray).[5908]

3.2.2-5 Function Labels
Key assignments should be displayed at all times, preferably through direct marking.
Additional Information: Where abbreviations are necessary, standardized abbreviations should be used.[5908]

3.2.2-6 Consistency
Fixed function keys should be used consistently throughout the system.[5908]

3.2.2-7 Actuation
Fixed function keys should require only a single actuation to accomplish their function.[5908]

3.2.2-8 Repeat for Special Functions
Function keys (except for the delete key) should not repeat upon prolonged depression.[5908]

3.2.2-9 Status Display
When the effect of a function key varies, the status of the key should be displayed.
Additional Information: Variable function keys should be easily relabeled.[5908]

3.2.2-10 Easy Return to Initial Functions
Where the functions assigned to a set of function keys change as a result of user selection, the user should be given an easy means to return to the initial functions.[5908]

3.2.2-11 Reprogrammable or Inactive Default Functions

When keys with labeled default functions are reprogrammed or turned off, a visual indication should alert the user that the standard function is not currently accessible via that key.[5908]

3.2.2-12 Shifted Characters

Shift keys should be not required to operate variable function keys.[5908]

3.2.3-1 Dynamic Characteristics

The controller should be able to produce any combination of x-and y-axis output values.
Additional Information: The follower (cursor) manipulated by the controller should smoothly track the movement of the controller in the same direction, within +/- 10 degrees without backlash, cross-coupling, or the need for multiple corrective movements. While manipulating the control, neither backlash nor cross-coupling should be apparent to the user.[5908]

3.2.3-2 Positive Centering

If there is a "home position," the capability for an automatic return to that point should be provided.[5908]

3.2.3-3 Single Monitor/Single Controller Cursor Travel Limits

In a single monitor/single controller environment, movement of the controller should drive the follower to the edge of the screen only and not off the screen.[5908]

3.2.3-4 Separation of Selectable Screen Items

Selectable screen items or regions should be separated from each other by a sufficient distance to minimize inadvertent activation of adjacent items or regions.[5908]

3.2.3-5 Selectable Tracking Speed

The user should be able to select the controller tracking speed (control-display ratio) from a predefined range; the default speed should be moderate.
Additional Information: Control ratios and dynamic features should meet the dual requirement of rapid gross positioning and smooth, precise fine positioning. The control/display ratios should take into account both screen size and maximum maneuvering displacement. At a minimum, movement of the controller across the entire maneuvering surface should move the cursor from one side of the screen to the other.[5908]

3.2.3-6 Selectable Inter-Click Interval

If multiple clicks are required on a selection button, the user should be able to select the inter-click interval from a predefined range; the default interval should be moderate.[5908]

3.2.3-7 Limb Support for Trackballs and Mice

When trackballs and mice are used to make precise or continuous adjustments, hand, wrist, or arm supports should be provided.[5908]

3.2.3-8 Mouse Shape

The mouse should have no sharp edges but should be shaped roughly as a rectangular solid.[5908]

3.2.3-9 Use of Mouse by Either Hand

Users should be able to configure a mouse for right- or left-handed operation.[5908]

3.2.3-10 Appropriate Use of Displacement (Isotonic) Joysticks

Displacement joysticks are preferred over force joysticks when positioning accuracy is more critical than positioning speed.

Additional Information: Displacement joysticks that are used for rate control should be spring-loaded for return to center when the hand is removed. Displacement joysticks usually require less force than force joysticks and are less fatiguing for long operating periods. Hand-operated displacement joysticks may be used as mounting platforms for secondary controls, such as thumb and finger-operated switches. Operation of secondary controls is less error prone with displacement handgrips than with isometric handgrips.[5908]

3.2.3-11 Appropriate Use of Force (Isometric) Joysticks
Force joysticks are preferred over displacement joysticks when precise or continuous control in two or more related dimensions is required.
Additional Information: Force joysticks are particularly appropriate for applications: (1) which require precise return to center after each use; (2) in which feedback is primarily visual rather than tactile feedback from the control itself; and (3) where there is minimal delay and tight coupling between control and input and system reaction. When positioning speed is more critical than positioning accuracy, force joysticks should be selected over displacement joysticks.[5908]

3.2.3-12 Force Joysticks Dynamic Characteristics
The output of the force joystick should be proportional to and in the same direction as the user's perceived applied force. Maximum force for full output should not exceed 27 lb (118 N).
Additional Information: Movement should be smooth in all directions, and positioning of a follower should be attainable without noticeable backlash, cross-coupling, or need for multiple corrective movements. Control ratios, friction, and inertia should meet the dual requirements of rapid gross positioning and precise fine position. When used for generation of free-drawn graphics, the refresher rate for the follower on the display should be sufficiently high to give the appearance of a continuous track.[5908]

3.2.3-13 Displacement Joystick Dynamic Characteristics
The output of the displacement joystick should be proportional to and in the same direction as the displacement of the joystick from the center. Movement should not exceed 45 degrees from the center position.
Additional Information: The resistance should be sufficient to maintain the handle position when the hand is removed. Movement should be smooth in all directions, and positioning of a follower should be attainable without noticeable backlash, cross- coupling, or need for multiple corrective movements. Control ratios, friction, and inertia should meet the dual requirements of rapid gross positioning and precise fine positioning. When used for generation of free-drawn graphics, the refresher rate for the follower on the display should be sufficiently high to give the appearance of a continuous track.[5908]

3.2.3-14 Hand-Operated Joysticks Dimensions and Clearance
The handgrip length should be between 4.25 to 7 inches (110 to 180 mm). The grip diameter should not exceed 2 inches (50 mm). Clearances of 4 inches (100 mm) to the side and 2 inches (50 mm) to the rear should be provided to allow for hand movement.[5908]

3.2.4-1 Appropriate Use of Touch Screens

Touch screens are not recommended if the task requires holding the arm up to the screen for long periods of time.
Additional Information: Tasks involving touch screens should not require frequent, alternating use of the touch screen and keyboard.[5908]

3.2.4-2 Appropriate Use of a Light Pen

A light pen may be used for non-critical input when precise positioning is not required; it should not be used when the task would require holding the pen up to the screen for long periods of time.
Additional Information: Tasks involving light pens should not require frequent, alternating use of the light pen and the keyboard.[5908]

3.2.4-3 Appropriate Use of a Graphics Tablet

Grid and stylus devices may be used for picking data from a display and entering points on a display.
Additional Information: Displacement of the stylus from the reference position should cause a proportional displacement of the follower. The grid may be on a transparent medium allowing stylus placement directly over corresponding points on the display, or it may be displaced from the display in a convenient position for stylus manipulation. In either case, a follower should be presented on the display at the coordinate values selected by the stylus.[5908]

3.2.4-4 Activation

Light pens and graphics tablets should be equipped with an actuating/deactuation mechanism.
Additional Information: This is to prevent inadvertent actuation. For most light pen applications, a push-tip switch, requiring 2 to 5 ounces (0.5 N to 1.4 N) of force to actuate, is preferred.[5908]

3.2.4-5 Feedback

Two forms of feedback should be provided: (1) feedback concerning the position of the follower, and (2) feedback that the pointing device has actuated and the input has been received by the system.
Additional Information: Feedback can be in the form of displayed follower (such as a circle or crosshair) or highlighting.[5908]

3.2.4-6 Dynamic Characteristics

When used as a two-axis controller, movement of the pointing device in any direction on the surface of the screen or tablet should result in smooth movement of the follower in the same direction.
Additional Information: Discrete placement of the pointing device at any point on the surface should cause the follower to appear at the corresponding coordinates and to remain steady so long as the light pen is not moved. Refresh rate for the follower should be sufficiently high to ensure the appearance of continuous track.[5908]

3.2.4-7 Follower Visibility

For touch screens and light pens, the follower should be visible on screen while the pointing device is touching the screen.[5908]

3.2.4-8 Serial Command Response

The system should accept only one command at a time.[5908]

3.2.4-9 Feedback for Multiple Workstations

Discriminable audible beeps (used to supply feedback) should be used when more than one touch screen, light pen, or graphics tablet is employed.[5908]

3.2.4-10 Dimensions and Separation of Touch Zones

To allow for finger size and parallax inaccuracy, the dimensions of response areas of touch screens should be a maximum height and width of 1.5 inches (40 mm) and a minimum height and width of 0.6 inches (15 mm), with a maximum separation distance of 0.25 inches (6 mm) and minimum of 0.1 inches (3 mm).[5908]

3.2.4-11 Touch Screen Resistance

Force required to operate force-actuated touch screens should be a maximum of 5.3 ounces (1.5 N) and minimum of 0.9 ounces (0.25 N).[5908]

3.2.4-12 Neutral Tint of Touch Overlays

Touch screen overlays should have a neutral tint that does not distort colors or interfere with color coding.[5908]

3.2.4-13 Touch Screen Luminance Transmission

Touch screen displays should have sufficient luminance transmission to allow the display with touch screen installed to be clearly readable in the intended environment.[5908]

3.2.4-14 Light Pen Dimensions and Mounting

The light pen should be between 4.75 to 7 inches (120 to 180 mm) long with a diameter of 0.3 to 0.75 inches (7 to 20 mm). A conveniently located clip should be provided to hold the pen when not in use.[5908]

3.2.4-15 Graphic Tablet Size and Orientation

Transparent grids that are used as display overlays should conform to the size of the display. Grids that are displaced from the display should approximate the display size and should be mounted below the display in an orientation to preserve directional relationships to the maximum extent.
Additional Information: For example, a vertical plane passing through the north/south axis on the grid should pass through or be parallel to the north/south axis on the display.[5908]

3 CONTROLS
3.3 Conventional Control Devices
3.3.1 Pushbutton Controls
3.3.1.1 General

3.3.1.1-1 Position
Pushbuttons in a row or matrix should be positioned in a logical order, or in an order related to the procedural sequence.[0700]

3.3.1.1-2 Indication of Activation
To ensure that the user knows that a pushbutton has been pressed far enough for activation, a positive indication should be provided.
Additional Information: This indication can be in the form of a snap feel, an audible click, or an integral light.[0700]

3.3.1.1-3 Pushbutton Surface
The surface of a pushbutton should offer slip resistance or be concave.[0700]

3.3.1.2-1 Dimensions of Round Pushbuttons

Round pushbuttons should conform to the dimensions given in Figure 3.5.[0700, 1472]

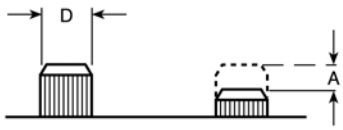

	Diameter (D)			Displacement (A)	
	Fingertip Operation	Thumb Operation	Palm Operation	Fingertip Operation	Thumb or Palm
Minimum	0.4 (10)*	0.75 (19)	1.6 (40)	.08 (2)	0.12 (3)
Maximum	1.0 (25)	1.0 (25)	2.8 (70)	.25 (6)	1.5 (38)

Dimensions are given in inches and (millimeters).
* Minimum diameter for guarded or recessed pushbuttons should be 0.75 inch (19mm).

Figure 3.5 Recommended dimensions for unguarded and non-recessed pushbuttons (finger- or hand-operated)

3.3.1.2-2 Resistance of Round Pushbuttons

Resistance should be 10 to 40 ounces (2.8 to 11.1 N) for fingertip operation and 10 to 80 ounces (2.8 to 22.2 N) for thumb or palm operation.[0700, 1472]

3.3.1.3-1 Discriminability
Legend pushbuttons should be readily distinguishable from legend lights.
Additional Information: This may be achieved by distinctive shape, labeling, location, or other techniques (see also Guidelines 1.6.5-7 and 1.6.5-9)[0700]

3.3.1.3-2 Legend
The legend should be readable under all environmental conditions.
Additional Information: The legend should be readable under ambient light conditions, with or without internal illumination. The illuminated condition should be clearly recognizable under the highest predicted ambient light condition and should be at least 10 percent brighter than the surrounding panel. Legend lettering and contrast should conform to recommendations for legend lights (Guidelines 1.6.5-7 and 1.6.5-8). The legend message should be specific, unambiguous, and concise. The legend message should contain no more than three lines of lettering.[0700]

3.3.1.3-3 Lamp Reliability
A lamp test or dual lamp/dual filament capability should be provided if the mean time between failure is less than 100,000 hours.[0700, 1472]

3.3.1.3-4 Easy Replacement of Covers
Lamps within the pushbutton should be replaceable from the front of the panel.[0700]

3.3.1.3-5 Safe Replacement of Lamps
Legend pushbuttons should not short out during lamp replacement or be susceptible to inadvertent activation during the process of lamp removal or replacement.[0700]

3.3.1.3-6 Correct Replacement of Covers
Legend covers should be keyed to prevent the possibility of interchanging the covers.[0700]

3.3.1.3-7 Barriers
Barriers should be used when legend pushbuttons are contiguous.
Additional Information: Barriers should have rounded edges.[0700]

3.3.1.3-8 Dimensions of Legend Pushbuttons
Legend pushbuttons should conform to the dimensions shown in Figure 3.6.[0700, 1472]

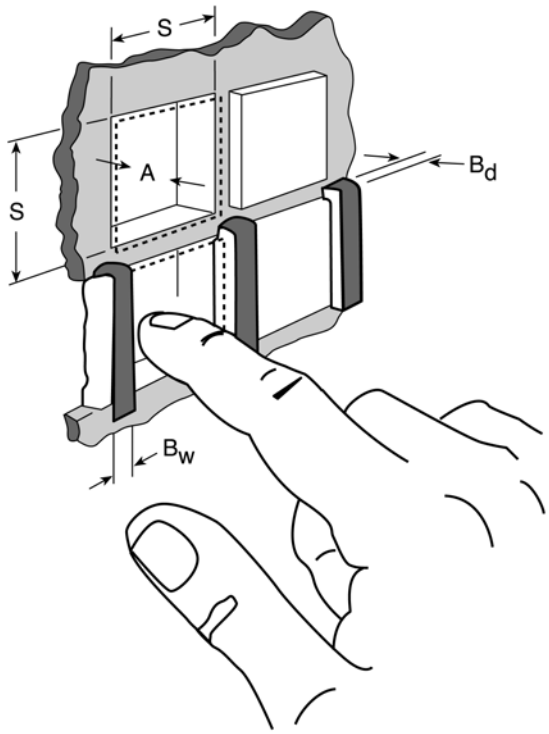

	Size (S)	Displacement (A)	Barriers Width (Bw)	Barriers Depth (Bd)
Minimum	0.75 (19)*	0.125 (3) **	0.125 (3)	0.188 (5)
Maximum	1.50 (38)	0.250 (6)	0.250 (6)	0.250 (6)

Dimensions are given in inches and (millimeters).
* 0.65 inches (15 mm) where switch is not depressed beyond the panel surface.
** 0.2 inches (5 mm) for switches having positive indication of activation.

Figure 3.6 Recommended dimensions for legend pushbuttons

3.3.1.3-9 Resistance of Legend Pushbuttons

Resistance should be 10 to 60 ounces (2.8 to 16.7 N).[0700, 1472]

3 CONTROLS
3.3 Conventional Control Devices
3.3.2 Rotary Controls
3.3.2.1 General

3.3.2.1-1 Direction of Activation
Rotary control settings should increase in value with a clockwise rotation.[0700]

3.3.2.1-2 Rotary Control Shape Coding
Shape coding should be employed if rotary controls used for widely different functions are placed on the same panel.
Additional Information: General guidelines for coding controls (including shape coding) are given in Section 3.1.2, Coding of Controls.[0700]

3.3.2.1-3 Coding Specifications
Shape-coded rotary controls should be visually and tactually identifiable.[0700]

3.3.2.1-4 Rotating Knob Shape Options
Rotating knob controls for different types of control actions should be distinguishable by sight and touch and not easily confused with each other.
Additional Information: Figure 3.7 gives examples of suitable knob designs developed for three major classes of knobs, each class intended for a different purpose: multiple rotation, fractional rotation, and detent positioning. General guidelines for coding controls (including shape coding) are given in Section 3.1.2, Coding of Controls.[0700]

3.3.2.1-5 Rotary Action Control Applications
Rotary action controls should be used in situations where linear or pushbutton controls would be subject to inadvertent activation and fixed protective structures are impractical or inappropriate.[0700]

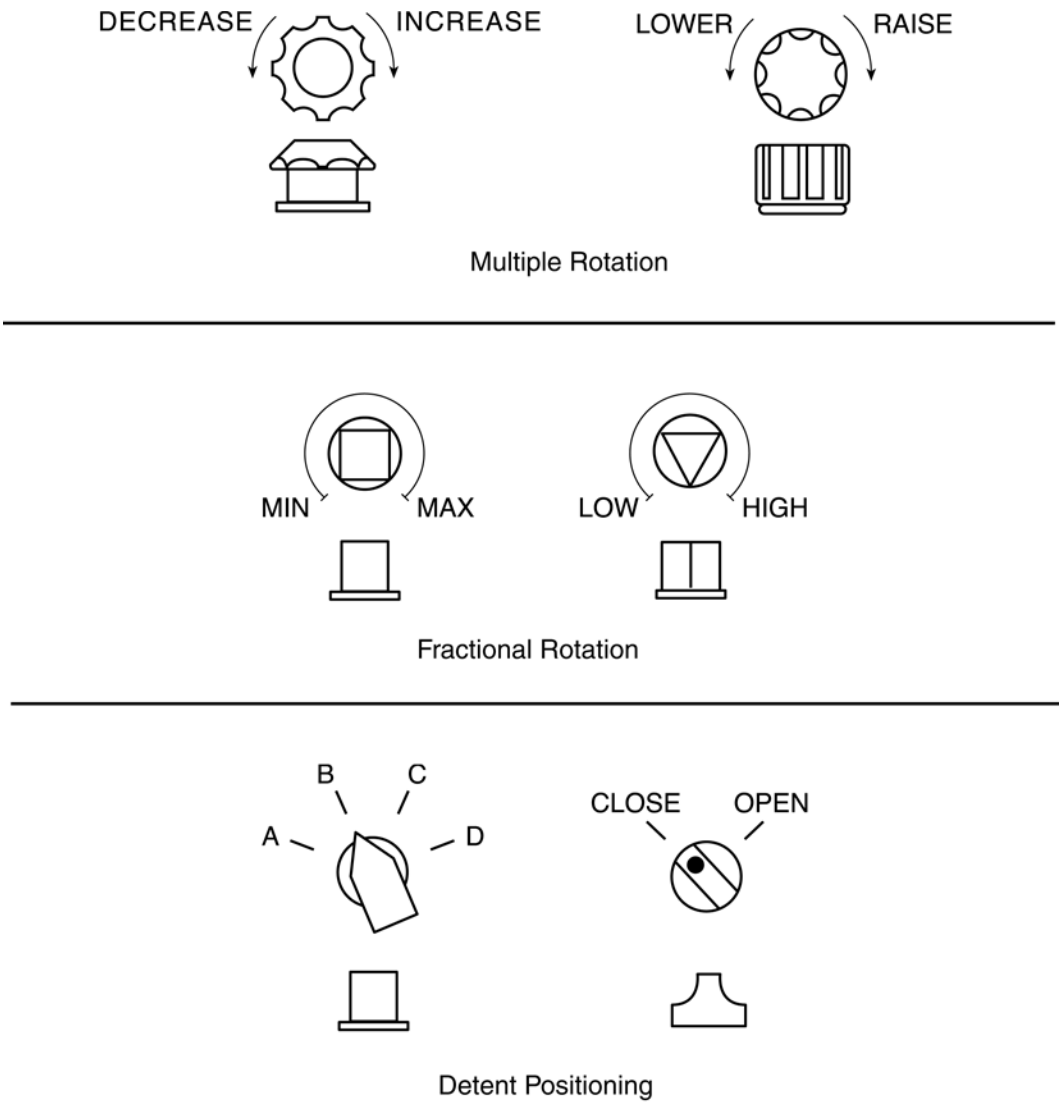

Figure 3.7 Shape-coded rotary controls

3.3.2.2-1 Dimensions of J-Handles

High torque J-handles should conform to the dimensions shown in Figure 3.8.[0700, 3659]

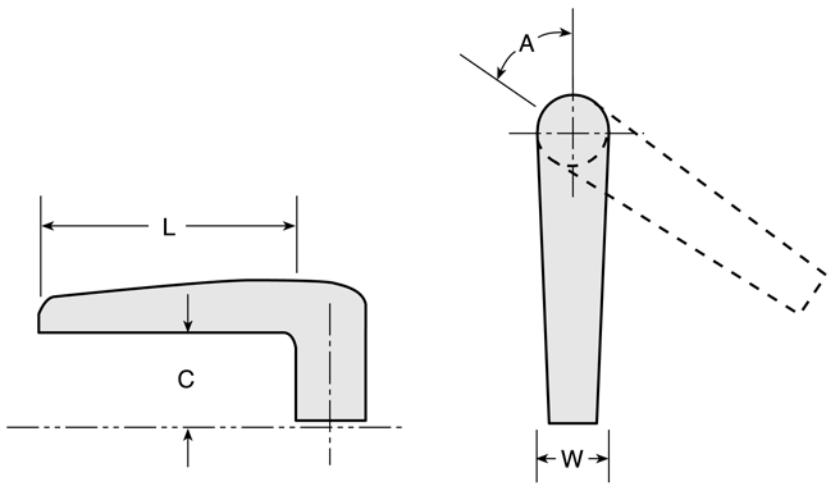

	Length (L)	Clearance (C)	Width (W)	Displacement (A)
Minimum	3.75 (95)	1.25 (32)	0.65 (16)	± 24°
Maximum	6.0 (150)	2.0 (50)	1.0 (25)	± 60°

Dimensions are given in inches and (millimeters).

Figure 3.8 High-torque J-handle dimensions

3.3.2.2-2 Resistance of J-Handles

Resistance should be 6 to 12 inch-pounds (0.7 to .14 N-m).[0700, 3659]

3.3.2.2-3 Low-Torque Designs

When using smaller scale J-handles, the handle portion usually has a flattened or flared tip for finger placement, and the clearance between handle and panel surface can be less.[0700]

3.3.2.3-1 Use
Key-operated controls should be used when system requirements dictate that the function being controlled should be secured against activation by unauthorized personnel.
Additional Information: If key-operated controls cannot be justified in terms of security, they are probably not necessary and should not be used. Key-operated switches should not be used solely as a means of shape coding.[0700]

3.3.2.3-2 Teeth: Single Row
Keys with a single row of teeth should be inserted into the lock with the teeth pointing up or forward.[0700]

3.3.2.3-3 Teeth: Double Row
Keys with teeth on both edges should fit the lock with either side up or forward.[0700]

3.3.2.3-4 Off Orientation
Locks should be oriented so that the OFF or SAFE state is in effect when the key is in the vertical position.[0700]

3.3.2.3-5 Key Removal
Users should not normally be able to remove the key from the lock unless the switch is turned to the OFF or SAFE position.[0700]

3.3.2.3-6 Labeling
Control positions should be labeled.[0700]

3.3.2.3-7 Actuation of Key Switch
Actuation of an item by a key operated switch should be accomplished by turning the key clockwise from the vertical OFF (i.e., upright) position.[1472]

3.3.2.3-8 Dimensions of Key-Operated Controls
Key-operated control dimensions should conform to the dimensions shown in Figure 3.9.[0700, 1472]

3.3.2.3-9 Resistance of Key-Operated Controls
The resistance of key-operated controls should be 1 to 6 inch-pounds (0.11 to 0.68 N-m).[0700, 1472]

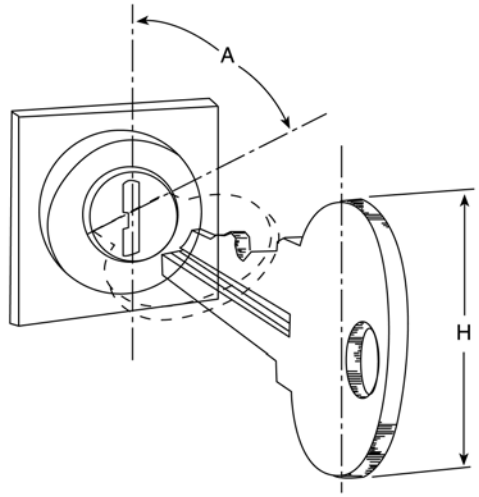

	Displacement (A)	Height (H)
Minimum	60	0.5 (13)
Maximum	90	3.0 (75)

Dimensions are given in inches and (milli meters).

Figure 3.9 Key-operated control dimensions

3.3.2.4-1 Knobs

Knobs for continuous adjustment controls should be round in shape, with knurled or serrated edges.[0700]

3.3.2.4-2 Position Indication

When an indication of position is desirable, it should allow the user to easily recognize the position.
Additional Information: The pointer configurations shown in bottom of Figure 3.7 may be used. Where more accuracy is required, a line should be engraved (and filled with contrasting pigment) both on top and down the side of the pointer, as shown on the knob at the bottom of the figure.[0700]

3.3.2.4-3 Knob Dimensions

Fingertip grasp knobs should be between 0.5 and 1 inch (13 and 25 mm) in height and between 0.375 and 4 inches (10 and 100 mm) in diameter. Thumb and forefinger encircled knobs should be between 1 and 3 inches (25 and 75 mm) in diameter.[0700]

3.3.2.4-4 Knob Torque

Knob torque should be within the range of 4.5 to 6.0 inch-ounces (32 to 42 mN-m).[0700]

3.3.2.4-5 Dimensions of Knobs with Skirts

Knobs with skirts should conform to the dimensions shown in Figure 3.10.[0700]

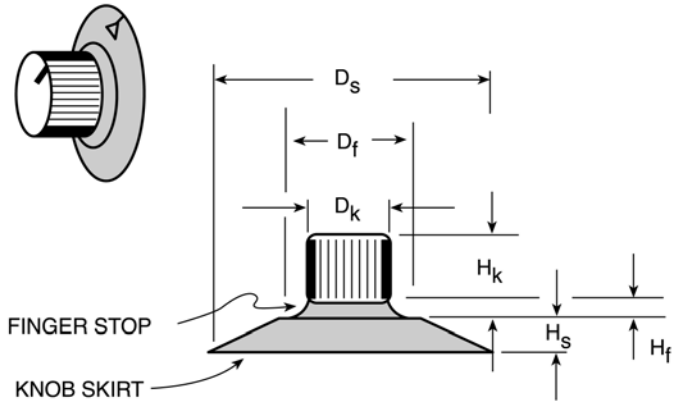

	Knob (k)	F-Stop (f)	Skirt (s)
Diameter (D)	0.75 (19)	1.25 (32)	2.0 (50)
	Combined		
Height (H)	0.75 (19)		0.25 (6)

Dimensions are given in inches and (millimeters).

Figure 3.10 Recommended dimensions for rotary controls with finger stops and skirts

3.3.2.5-1 Selection

Rotary selector controls should be used when three or more detented positions are required, and may also be used for two-detented position operation.[0700]

3.3.2.5-2 Positioning

Detents should be provided at each control position to ensure proper positioning of a discrete rotary control.

Additional Information: It should not be possible to position a control between detented positions. To minimize the possibility of placing a rotary selector in an unused position, stops should be provided at the limits of the control range. A maximum of 24 positions should be used on a rotary selector control.[0700]

3.3.2.5-3 Readability

Rotary controls should have a moving pointer and fixed position settings to maximize readability.[0700]

3.3.2.5-4 Position Indication

Position indication should be provided.

Additional Information: Desirable alternatives are: (1) illuminated indicator lights, (2) a line engraved both on the top of the knob and down the side, or (3) a pointer shape. It should not be possible to confuse the position of the knob in reference to position markers on the panel. To minimize the problem of parallax, pointers on knobs should be mounted close to the settings to which they point.[0700]

3.3.2.5-5 Dimensions of Rotary Selector Controls

Rotary selector controls should conform to the dimensions shown in Figure 3.11. [0700, 1472]

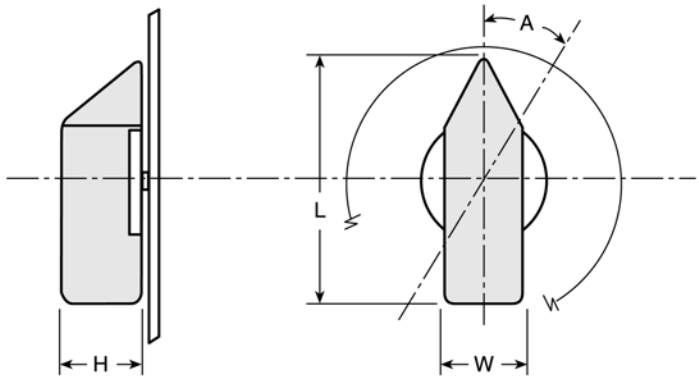

	Length (L)	Width (W)	Depth (H)	Displacement (A)	Displacement (A)*
Minimum	1.0 (25)		0.625 (16)	15°	30°
Maximum	4.0 (100)	1.0 (25)	3.0 (75)	40°	90°

Dimensions are given in inches and (millimeters).
* When special engineering requirements (such as protective clothing) or when tactually ('blind*) positioned controls demand large separation.

Figure 3.11 Recommended dimensions for rotary selector switches

3.3.2.5-6 Resistance of Rotary Selector Controls

Resistance should be 1 to 6 inch-pounds (0.11 to 0.68 N-m).[0700, 1472]

3.3.2.5-7 Momentary Contact Rotary Selector Controls

Knobs for spring-loaded momentary contact rotary selector controls should be large enough to be easily held against the spring torque, without fatigue, for as long as necessary to accomplish the control action.[0700]

3.3.3.1-1 Visibility
To minimize error, thumbwheel readouts should be visible from the thumbwheel operating position.[0700]

3.3.3.1-2 Coding
If the thumbwheel is used as an input device, the OFF, zero, or normal position should be coded to facilitate visual recognition of status.[0700]

3.3.3.1-3 Dimensions of Continuous Adjustment Thumbwheels
At least 1 inch of circumference of a continuous adjustment thumbwheel should be exposed to permit easy manipulation.
Additional Information: A continuous adjustment thumbwheel controls moves smoothly, i.e., its motion is not 'stepped' like that of a discrete thumbwheel contol.[0700]

3.3.3.1-4 Resistance of Continuous Adjustment Thumbwheels
The resistance of a continuous adjustment thumbwheel should be between 3 and 6 ounces.
Additional Information: A continuous adjustment thumbwheel controls moves smoothly, i.e., its motion is not 'stepped' like that of a discrete thumbwheel contol.[0700]

3.3.3.1-5 Dimensions of Discrete Thumbwheel Controls
Discrete thumbwheel controls should conform to the dimensions shown in Figure 3.12.[0700, 1472]

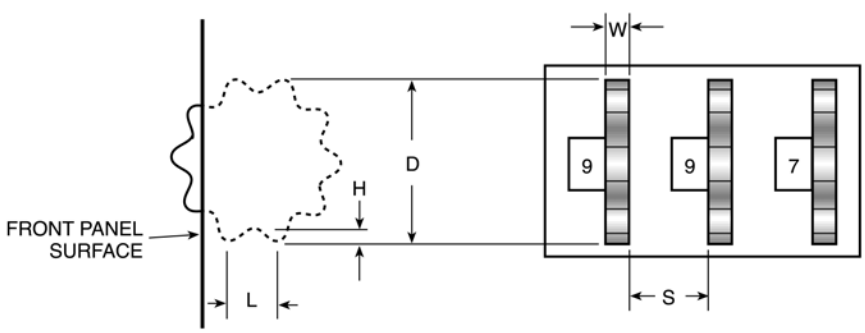

	Diameter (D)	Trough (L)	Width (W)	Depth (H)	Separation (S)
Minimum	1.125 (30)	0.45 (11)	0.125 (3)	0.125 (3)	0.4 (10)
Maximum	3.0 (75)	.75 (19)		.25 (6)	

Dimensions are given in inches and (millimeters).

Figure 3.12 Recommended dimensions for discrete thumbwheel controls

3.3.3.1-6 Resistance of Discrete Thumbwheel Controls
The resistance of discrete thumbwheel controls should be 6 to 20 ounces (1.7 to 5.6 N).[0700, 1472]

3.3.3.2-1 Surface
The surface of slide switches should be serrated or knurled.[0700]

3.3.3.2-2 Detents
Detents should be provided for each slide switch setting.
Additional Information: Resistance should gradually increase, then drop when the switch snaps into position. The switch should not be capable of stopping between positions.[1472]

3.3.3.2-3 Accidental Actuation
Channel guards or other preventive features should be provided when accidental actuation would have undesirable consequences.[1472]

3.3.3.2-4 Orientation
Slide switches should be vertically oriented.
Additional Information: Horizontal orientation or activation slide switches should be employed only for compatibility with the controlled function or equipment location.[1472]

3.3.3.2-5 Positive Indication
Slide switches involving more than two positions should be designed to provide positive indication of the control setting, preferably a pointer located on the left side of the slide handle.[1472]

3.3.3.2-6 Dimensions of Slide Switches
Slide switches should conform to the dimensions shown in Figure 3.13.[0700]

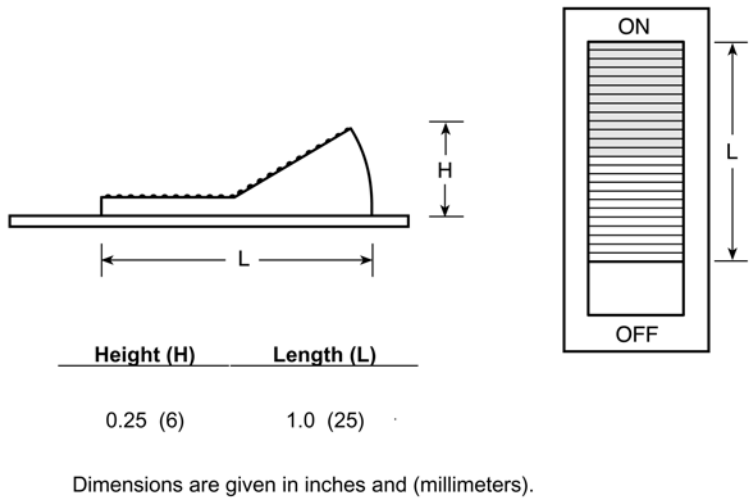

Figure 3.13 Recommended dimensions for slide switches

3.3.3.3-1 Positioning

To minimize the possibility of inadvertent activation or setting between control positions, toggle switches should have an elastic resistance that increases as the control is moved and drops as the switch snaps into position.[0700]

3.3.3.3-2 Feedback

Toggle switches should emit an audible click, or provide some other source of feedback on activation.[0700]

3.3.3.3-3 Dimensions of Toggle Switches

Toggle switches should conform to the dimensions shown in Figure 3.14.[0700, 1472]

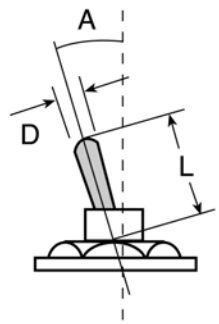

	Arm Length (L)			Displacement (A)	
	Bare Finger	Gloved Finger	Tip Diameter (D)	Two Position	Three Position
Minimum	0.5 (13)	1.5 (38)	0.125 (3)	30°	17°
Maximum	2.0 (50)	2.0 (50)	1.0 (25)	80°	40°
Desired	—		—	—	25°

Dimensions are given in inches and (millimeters).

Figure 3.14 Recommended dimensions for toggle switches

3.3.3.3-4 Resistance of Toggle Switches

Resistance should be 10 to 16 ounces (2.8 to 4.4 N) for small switches and 10 to 40 ounces (2.8 to 11.1 N) for large switches.[0700, 1472]

3.3.3.4-1 Orientation

Rocker switches should ordinarily be oriented vertically.
Additional Information: Activation of the upper part should control the ON or INCREASE function. Horizontal orientation should be used only when required by the location of the controlled function or equipment.[0700]

3.3.3.4-2 Indication of Activation

Activation should be indicated by a snap feel, an audible click, or an integral light.
Additional Information: In the ON position, the top of the switch should be flush with the panel surface.[0700]

3.3.3.4-3 Resistance

Control resistance should gradually increase, then drop to zero when the control snaps into position.
Additional Information: This resistance should preclude the switch being placed between positions.[0700]

3.3.3.4-4 Inadvertent Activation

If it controls a critical function, the switch should be protected by channel guards or other means to prevent inadvertent activation.[0700]

3.3.3.4-5 Dimensions of Rocker Switches

Rocker switches should conform to the dimensions shown in Figure 3.15.[0700, 3659, 1472]

3.3.3.4-6 Resistance of Rocker Switches

Resistance should be 10 to 40 ounces (2.8 to 11.1 N).[0700, 3659, 1472]

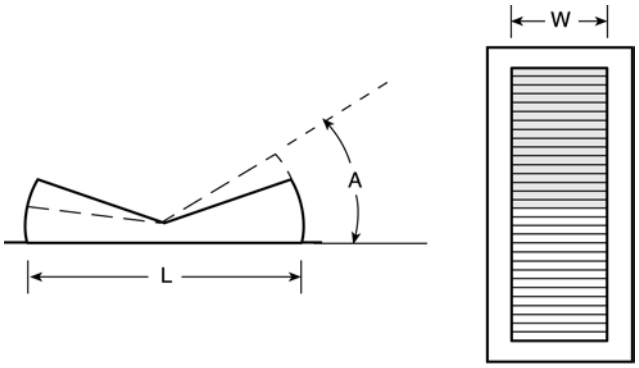

	Width (W)	Length (L)
Minimum	0.25 (6)	0.50 (13)
Maximum	1.5 (38)	0.75 (19)

	Displacement (A)	
	Two-Position	Three-Position
Minimum	30°	18°
Optimum		25°

Figure 3.15 Recommended dimensions for rocker switches

Part II
HSI Systems

SECTION 4: ALARM SYSTEM

4 ALARM SYSTEM

Alarm systems can be described both in terms of their physical and functional characteristics. Each is discussed below. The physical characterization illustrates the relationship between the alarm system and the rest of the plant, including both equipment and operators. The functional characterization is a way of describing how the alarm system is used in the operation of the plant.

Figure 4.A shows a block diagram of a conventional alarm system. Various plant parameters (such as temperatures and pressures) are monitored by sensors (such as resistance temperature detectors and bellows pressure detectors). The output of the sensors is processed electronically to send the signals to various circuits that serve as controls, displays, and alarms. The figure shows the inputs to a parameter display and to an alarm bistable. Each alarm circuit for a parameter has a setpoint value at which the alarm is triggered. The bistable senses when the parameter exceeds the alarm setpoint; this in turn actuates the alarm display. The control room operators can then make judgments about the plant's state and what actions to take, based upon the alarm and parameter displays and the procedures. The operators would, as necessary, adjust the plant systems and components through the plant controls. Such adjustments would in turn be reflected by the sensors back into the alarms and displays.

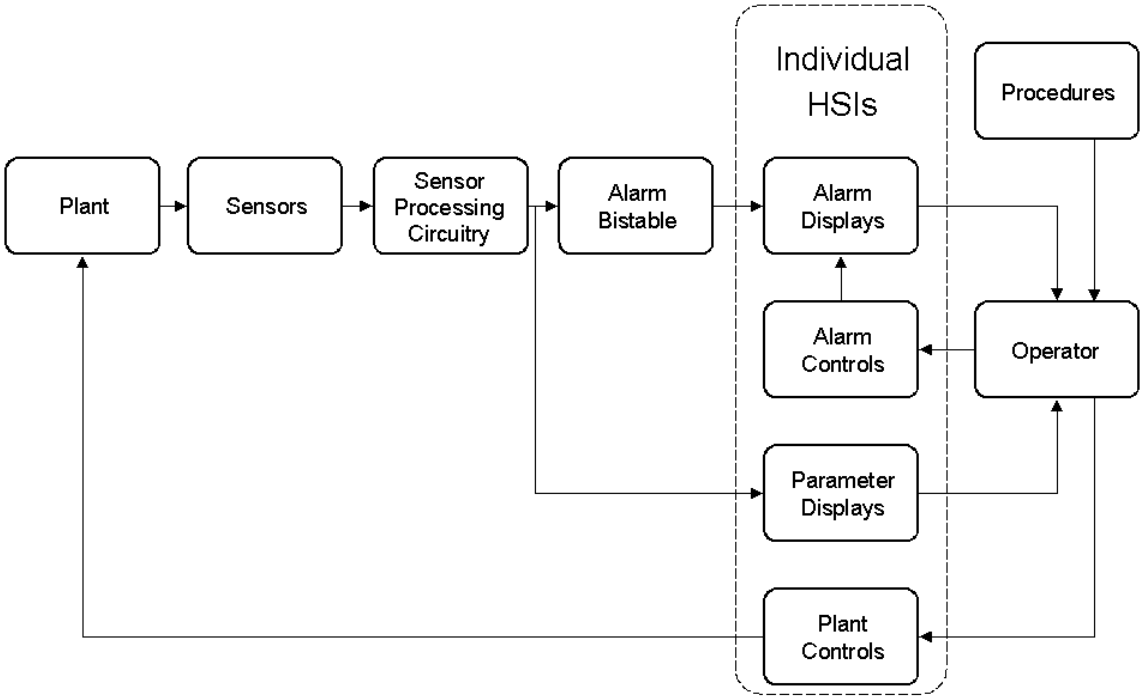

Figure 4.A Conventional alarm system

Figure 4.B presents a similar block diagram for one version of an advanced alarm system. In this version the plant, the sensors, and the sensor signal processing circuitry are similar to that for a conventional alarm system (Figure 4.A). However, the advanced alarm system (depicted in the dotted box) is typically integrated and contains a significant capability for information processing. The functioning of this circuitry is discussed later. The outputs from the advanced alarm system are typically input to some integrated HSI network that may employ VDUs or other versatile display devices. The individual parameter displays and the controls may also be included within the same integrated HSI. The operators would then use their procedures and the HSI to assess the situation, plan responses, and take any necessary actions to control the plant. Again, these actions would be reflected in a feedback loop to the plant, the sensors, and back to the HSI.

4 ALARM SYSTEM

The alarm system depicted in Figure 4.B is representative of an original analog alarm system that has had digital post-processing back-fitted to it in order to improve the alarm system's functionality. The Safety Parameter Display System (SPDS) is one example of such a digital post-processor. Other more modern alarm systems that are designed digitally from the beginning may include alarm processing at the sensor processing level.

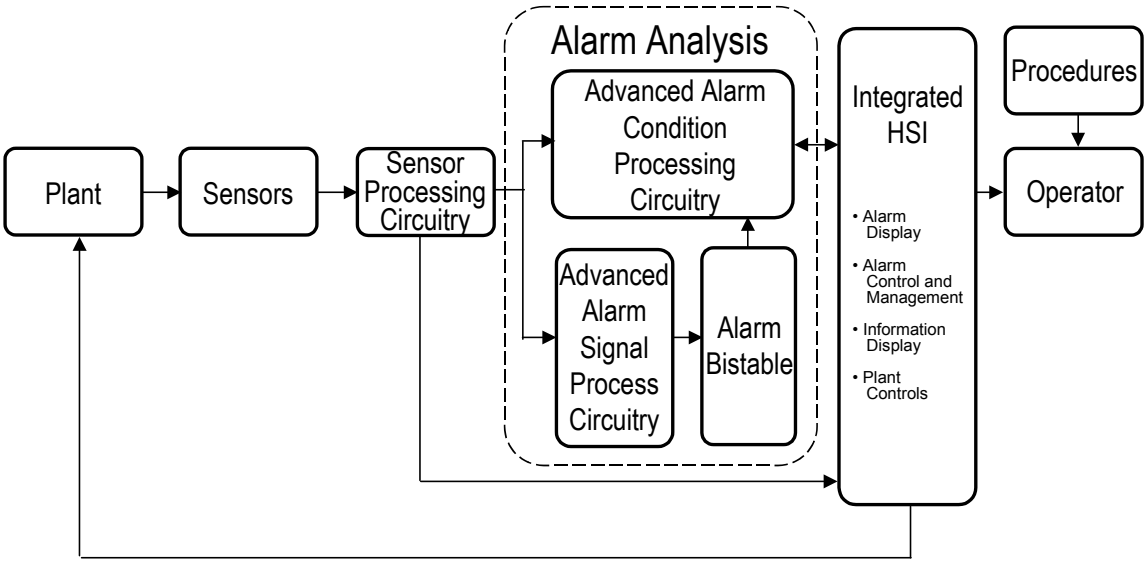

Figure 4.B Advanced alarm system

The characterization of an alarm system by the major functional and physical topics addressed in the guidance is shown in Figure 4.C. This shows the five main functions of an alarm system: Alarm definition, alarm processing, alarm prioritization, alarm display, and alarm control and management. Alarm Response Procedures (ARPs) provide more detailed information concerning the nature of the alarm condition than is typically provided in the alarm message. This characterization is useful for an HFE design reviewer, and therefore it forms the basis for organizing the alarm system guidelines. For each sub-section below, three types of information are given: an introduction to the functional area, an identification of the types of information a reviewer should address, and a reference to the appropriate section, which contains the guidelines for reviewing the topic. These alarm characteristics are discussed below.

ALARM SYSTEM FUNCTIONS

The characterization and description presented here should assist the reviewer in understanding the alarm system from a functional standpoint and guide the reviewer to appropriate guideline sections. This characterization addresses both traditional analog alarm systems and more modern systems that have significantly more capability. However, one must recognize that as alarm system designs evolve, changes in functionality may occur that affect the characterization. As an example, one trend for new advanced systems is to more completely integrate the alarm system functions into the main part of the control room interfaces, blurring the distinction between the alarms and the other displays.

The general characteristics include the basic alarm functions associated with alerting the operator, guiding the operator's actions, helping the operator monitor plant events, and facilitating the operator's interaction with the plant.

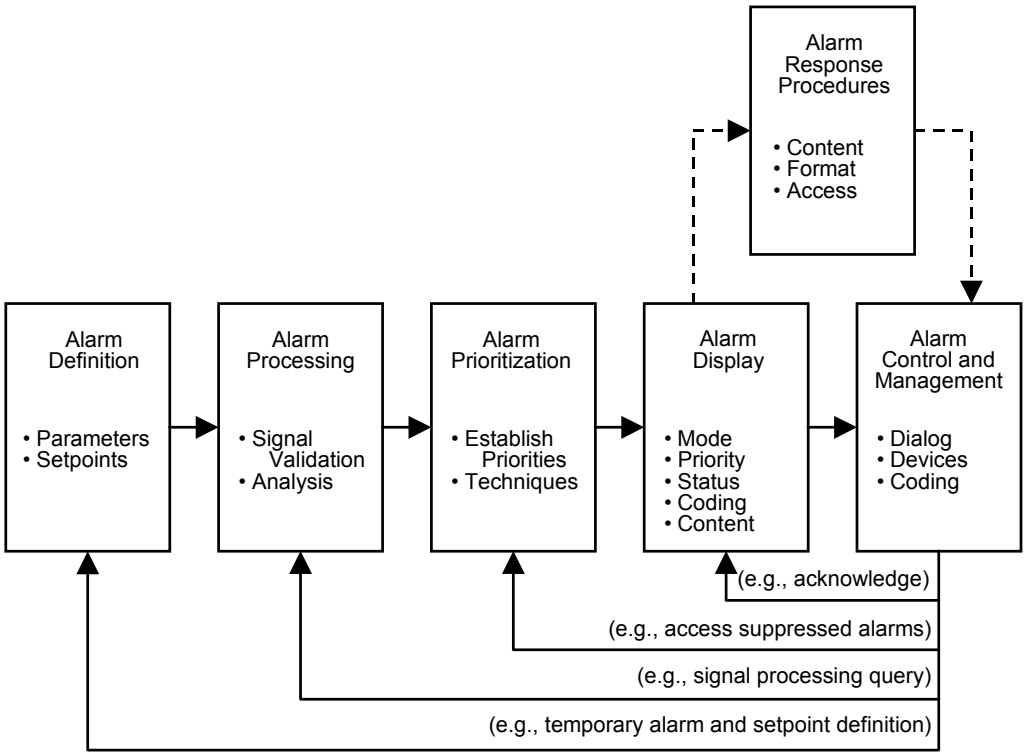

Figure 4.C Alarm system functional elements

Alarm Definition

Alarm definition is the specification of the types of process parameters to be monitored and displayed by the alarm system and the setpoints to be used to represent those parameters. The following are important considerations in alarm definition:

- Alarm categories (the events and states from which alarms are selected)
- The criteria used to select alarm parameters to represent the categories
- The criteria for determining the setpoints
- The verification process (for task appropriateness):
  - process by which alarm inclusion was checked
  - process for assuring that non-alarms are not presented in the alarm system
- Alarm states (unacknowledged, acknowledged, cleared, and reset)

The systems engineering basis for the alarm definition specification should be established to ensure that it is appropriate from a safety standpoint. Review guidelines for alarm definition are provided in Section 4.1.1.

Alarm Processing

Alarms in conventional plants tend to be stand-alone systems that alert operators to off-normal conditions and to the status of systems and components, and, by inference, the functions they support. After being alerted, the operators consult other indicators for specific information (e.g., they may determine the actual value of a parameter for which an alarm for low level had just activated). Such systems tended to

overwhelm operators during transients because of the many nearly simultaneous annunciator activations with varying degrees of relevance to the operators' tasks. Thus, alarm processing techniques were developed to support operators in coping with the volume of alarms, to identify which are significant, and to reduce the need for operators to infer plant conditions. Alarm processing addresses a fundamental aspect of system design, namely, which alarms are presented to the operating crew.

Alarm signal processing refers to the process by which signals from sensors are automatically evaluated to determine whether any of the monitored parameters have exceeded their setpoints and to determine whether any of these deviations represent true alarm conditions. Alarm signal processing includes techniques for analyzing normal signal drift and noise signals and signal validation. Normal signal drift and noise are analyzed to eliminate signals from parameters that momentarily exceed the setpoint limits but do not represent a true alarm condition. Figure 4.B illustrates the incorporation of signal processing into the circuitry for an advanced alarm system.

Signal validation is a group of techniques for comparing and analyzing redundant or functionally related sensors to identify and eliminate false signals resulting from malfunctioning instrumentation, such as a failed sensor. Alarm conditions that are not eliminated by the alarm signal processing may be evaluated further by alarm condition processing and other analyses before alarm messages are presented to the operator.

Alarm condition processing refers to the rules or algorithms used to determine the operational importance and relevance of alarm conditions; this process determines whether the alarm messages that are associated with these conditions should be presented to the operator. Figure 4.B illustrates alarm condition processing. Note that alarms screened by the alarm condition processing circuitry may or may not have already been screened by the alarm signal processing/validation circuitry. Also, the alarm condition processing circuitry receives inputs directly from the sensor processing circuitry to set the various values of logic that automatically determine how alarms are screened.

A wide variety of processing techniques have been developed; combinations of them are often employed in advanced alarm processing systems. Additionally, the processing may be occurring at various portions of the alarm systems depending on the advanced system design. The reviewer should be alert to the fact to ensure that all pertinent processing has been identified and reviewed. Each technique changes the resulting information provided to operators. For this discussion, four classes of processing techniques are defined: Nuisance Alarm Processing, Redundant Alarm Processing, Significance Processing, and Alarm Generation Processing. The classes of processing techniques are described below, and examples of each are given in Table 4.A.

Nuisance Alarm Processing – This class of processing includes techniques that eliminate alarms with no operational safety importance. For example, mode dependent processing eliminates alarms that are irrelevant to the current mode of the plant, e.g., the signal for a low pressure condition may be eliminated during modes when this condition is expected such as startup and cold shutdown, but be maintained when it is not expected, such as during normal operations.

Redundant Alarm Processing – This class of processing includes techniques that analyze for alarm conditions that are true/valid but are considered to be less important because they provide redundant information and theoretically offer no new/unique information. For example, in causal relationship processing only causes are alarmed and consequence alarms are eliminated or their priority is lowered. However, such techniques may minimize information that is used by the operator to confirm that the situation represented by the "true" alarm has occurred, for situation assessment, and for decision-making. Thus, in addition to quantitatively reducing alarms, processing methods may qualitatively affect the information given to the operating crew.

Table 4.A Alarm processing approaches

Category	Approach	Functional Description[1,2]
Nuisance	Status-alarm Separation	Separating status annunciators from alarms that require operator action.
Nuisance	Plant Mode Relationship	Alarms that are irrelevant to the current operational mode, such as start-up, are suppressed.
Redundant	Multi-setpoint Relationship	The relationship between multi-setpoints of a process variable is used to suppress lower priority alarms, e.g., when the level in the steam generator exceeds the high-high level setpoint, the high-level alarm is suppressed.
Redundant	State Relationship	Alarms associated with a well-defined situation, e.g., pump trip, are suppressed.
Redundant	Causal Relationship	The cause-effect relationship is used to identify alarms associated with causes while suppressing alarms associated with effects.
Significance	Relative Significance	Alarms associated with relatively minor disturbances during more significant events are suppressed.
Generation	Hierarchical Relationship	Using an alarm's relationship with components, trains, systems, and functions, hierarchical alarms are generated to provide operators with higher-level information.
Generation	Event Relationship	The unique pattern of alarms typically activated following the occurrence of an event is recognized and the potential initiating event is identified.
Generation	Alarm Generation	Alarms are generated when (1) conditions or events are expected to occur but do not (for example, when all control rods do not reach their fully inserted limits within a prescribed time after a scram) or (2) an alarm is expected but does not occur.

[1] For illustration purposes, the descriptions refer to alarm *suppression,* but filtering and prioritization can be also used.

[2] Functional descriptions are not intended to imply how the processing is accomplished in software.

Significance Processing – This class of processing includes techniques that analyze for alarm conditions that are true/valid but are considered to have less importance in comparison to other alarm conditions. For example, in an anticipated transient without scram event, alarms associated with minor disturbances on the secondary side of the plant could be eliminated or lowered in priority.

Alarm Generation Processing – This class of processing includes techniques that evaluate the existing alarm conditions and generate alarm messages which (1) give the operator higher level or aggregate information, (2) notify the operator when 'unexpected' alarm conditions occur, and (3) notify the operator when 'expected' alarm conditions do not occur. In effect, these processing techniques generate new (e.g., higher-level) alarm conditions. These new alarm conditions and their resulting alarm messages present an interesting paradox. Alarm systems should function to reduce errors, which often reflect the overloaded operator's incomplete processing of information. Alarm generation features may mitigate these problems by calling the operator's attention to conditions that are likely to be missed. However, the single most significant problem with alarm systems, as reported in the literature, is the large number of alarm messages presented to the operator at once. Since alarm generation creates additional messages, it may potentially exacerbate the problem.

Guidelines for reviewing alarm processing are provided in Section 4.1.2.

Alarm Prioritization

Alarm prioritization (or condition priority) refers to the determination of the relative importance to the operating crew of all current alarm conditions. This also includes consideration of alarm message availability. This assessment is accomplished in an advanced alarm system by applying alarm condition processing or in some cases processing at the sensor output level. The dimensions for evaluating the priority of an alarm condition should include the required immediacy of operator action and the significance of the condition to plant safety.

Alarm message availability refers to the process by which alarm messages are selected for presentation to the operators based on the priority of their alarm conditions. Thus, although two alarm messages may be valid for current plant conditions, one may be very important to the operator's role and should be emphasized, while the other may be of little importance and should be de-emphasized. Alarm message availability techniques emphasize important messages and de-emphasize less important ones, thereby focusing the operator's attention on the messages with the greatest operational significance.

Three alarm availability techniques have been identified – filtering, suppression, and dynamic priority coding; these techniques are defined below. (Note that these definitions are the authors'; the terms filtering and suppression are sometimes used interchangeably by other authors due to varying or imprecise definitions.)

Filtering – alarms determined by processing to be less important, irrelevant, or otherwise unnecessary are eliminated and are *not available* to the operators.

Suppression – alarms determined by processing to be less important, irrelevant, or otherwise unnecessary are not presented to the operators, but can be accessed upon request (Figure 4.D).

Dynamic priority coding – the results of alarm processing are segregated into alarms priority groupings (e.g., low and high priority) in contrast to filtering or suppressing low priority alarms determined by processing to be of lower priority.

A specific alarm system may employ a combination of these approaches. There are trade-offs among these approaches, and thus an issue remains as to which method should be used or in what contexts the various options should be exercised. Filtering completely eliminates the possibility of less important alarms distracting the operators. However, the designer may be removing information useful for other purposes. In addition, the designer must be certain that the processing method chosen is adequately validated and will function appropriately in all plant conditions. Suppression has the potential benefits of filtering by removing distracting alarms. However, since such alarms are still accessible on auxiliary displays, they potentially impose an additional secondary task workload to retrieve them. Dynamic priority coding does not conceal any information from operators. However, the method requires operators to perceptually "filter" alarms, using the priority codes, to identify the ones of higher priority. This creates the potential for distraction because it presents alarm messages of all levels of importance. The effect of these alternatives on the operators' performance needs to be considered.

The following considerations are important in prioritizing alarms:

- Specific dimensions used to prioritize the alarm's importance, e.g.,
    - Need for operator action
    - Challenges to the safety system
    - Threat to critical safety function
    - Others should be specified.
- Alarm priority characteristic
    - Number of levels for each prioritization dimension

- Method for assigning priority (for static prioritization) or computing priority (for dynamic prioritization)
- The treatment of alarms that have been removed through filtering (complete removal) or suppression (available to operators upon request).

Guidelines for reviewing alarm prioritization and availability are provided in Section 4.1.3.

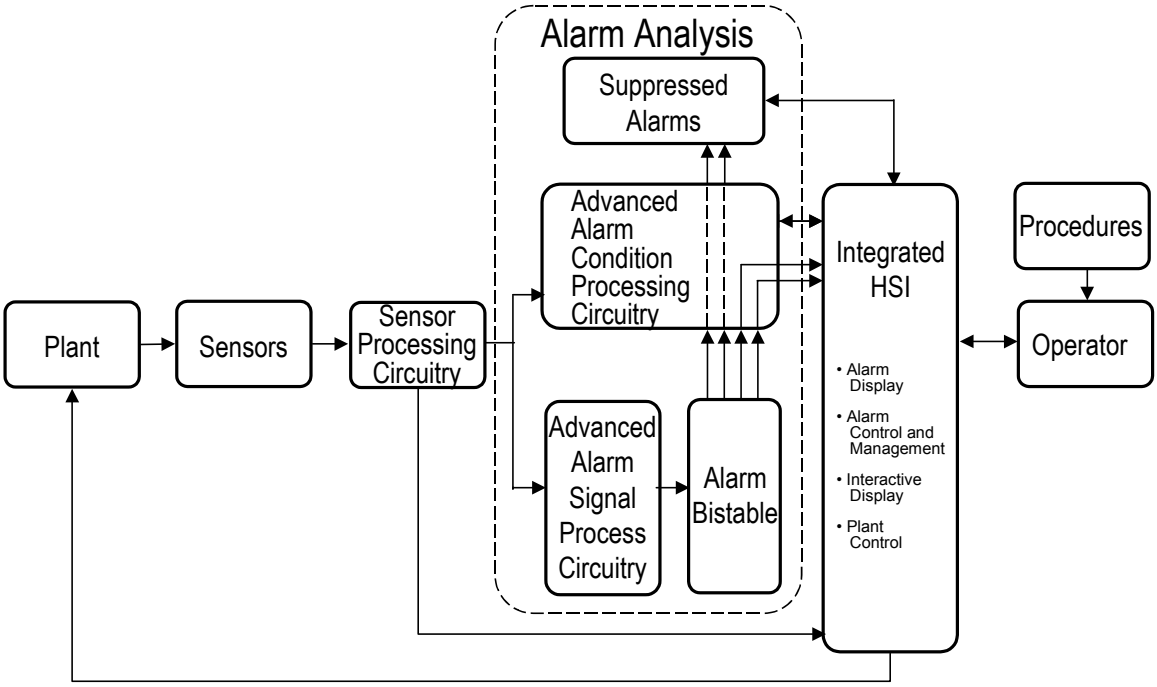

Figure 4.D Alarm suppression

ALARM DISPLAY

The information display aspects on alarms include both auditory and visual components. The auditory components are designed to capture the operator's attention to a change in the plant, while the visual components guide attention to the appropriate alarm (by using techniques such as flashing) and provide detailed alarm information (such as an alarm message).

To support the different functions of the alarm system, multiple visual display formats may be required, e.g., a combination of separate displays (such as alarm tiles) and integrated displays (such as alarms integrated into process displays). Thus, the display format of alarm information and the degree to which that information is presented separately or in an integrated fashion with other process information, are important safety considerations.

Alarm display approaches can first be characterized into three basic types:

- Spatially dedicated, continuously visible (SDCV) alarm displays (e.g., tiles).
- Alarm message lists (e.g., temporary alarm displays).
- Alarms integrated into process displays.

Other displays are possible, combining features of more than one type. For each of the alarm display types, the following characteristics are important:

- General characteristics
  - Display functions (e.g., the operators' monitoring and decision-making capabilities to be supported)
  - Degree of independence of alerting and informing functions
  - Degree of independence of priority and detailed information
  - Principles and criteria for allocating alarms to major display types
  - Alarm graphics
  - Consistency of alarm coding
- Display of high-priority alarms
- Display of alarm status
- Display of shared alarm
- Alarm messages
- Coding methods
- Detailed arrangement of alarm information
  - SDCV alarm displays
  - Alarm message lists

Guidelines for reviewing alarm displays are provided in Section 4.2. Guidelines for the review of general display characteristics are given in Section 1.

ALARM CONTROL & MANAGEMENT

The alarm control & management (or user-system interaction) aspects of the interface should be considered along two dimensions: functional requirements (what control functions are needed by operators) and implementation (how the functions are accomplished with the HSIs provided).

The typical functions used in alarm systems in the nuclear industry are silence, acknowledge, reset, and test (SART). In conventional plants, these functions are supported by dedicated controls such as pushbuttons. The SART philosophy also applies to advanced alarm systems, where interaction with the control functions may be more sophisticated and require greater flexibility than conventional alarm systems.

In addition to the basic SART controls, newer alarm systems provide many and varied alarm management functions. For example, the operator may be able to define temporary alarms, adjust setpoints, control filtering options, and sort alarms according to many separated dimensions, such as time, priority, and system. These dynamic aspects of the interface should be reviewed to ensure that excessive workload demands are avoided, while the overall functional characteristics of the alarm system are preserved. The dynamic aspects of the alarm system should not be disruptive or confusing to operators, especially when the alarm system changes modes of operation.

Some of these capabilities may require more sophisticated methods of communicating with the system than traditional dedicated switches or pushbuttons allow. The general method of communication between the operator and the alarm system, also called the dialog format, can include methods such as menu selection, command language, and special function keys (see Section 2). In advanced control rooms, this

aspect of operator communication with the system is likely to be integrated with other control room interfaces. Therefore, the alarm system may use the same input/control interfaces as the other HSI resources, such as the entry of temporary setpoints through a general-purpose keyboard.

In certain situations, such as during major process disturbances, it may be desirable to reduce workload by automating some alarm system functions, such as by silencing lower priority alarms or by temporarily stopping the flashing of an unacknowledged alarm. Similarly, automated controls may be implemented to trigger appropriate displays, such as alarm graphics, data windows, or display pages. These dynamic aspects of the alarm system should not be disruptive or confusing to operators, especially when the alarm system changes modes of operation.

Important characterization considerations for each type of user-system interaction function include the following:

- Control availability
- Modes of user interaction
    - Dialogue types (e.g., menus, command language)
    - Verification indications
    - Navigation and access of additional information
    - Additional parameter information and process displays
- Devices (design implementation)
    - Types (push buttons, switches, and touch screen)
    - Coding
    - Organization/layout (of control devices)
    - Location with respect to alarm displays and panels
- Alarm management features
    - Administrative controls
    - Operator-defined features
- Automatic features

Guidelines for reviewing alarm user-system interaction are provided in Section 4.3. Guidelines on general user-system characteristics are given in Section 2.

RELIABILITY, TEST, MAINTENANCE, AND FAILURE INDICATION

The alarm system must reliably provide alarm information to the operator. Important considerations include the reliability of the alarm system's hardware and software, the manner in which the alarm system conveys information to the operator about its failures or malfunctions, and the ease with it can be tested and maintained with minimal interruption to the operators. Each of these points is discussed below.

First, the hardware and software components of the alarm system should have sufficient reliability that the failure of a single component does not cause significant loss of functions or information. For example, the redundancy and diversity of the alarm system design should protect against alarm indications being lost or spurious alarm messages being generated as the result of sensor or signal processing malfunctions. In addition, the alarm system should allow the operators to obtain information from an alternate display if the primary display device fails.

Second, when alarm system malfunctions do occur, the alarm system should make them apparent to the operators. NPP events emphasize the importance of verifying the status of the alarm system (see, for example, Information Notice 93-47, U.S. NRC, 1993). Test controls in conventional control rooms have traditionally allowed operators to check the operation of the alarm display (e.g., detect burnt-out annunciator lamps), but not other portions of the alarm system, such as signal processing components. In addition, these controls only tested the alarm system upon demand; they did not provide continuous monitoring for anomalies. Since operators rely on the alarm system as the first indication of a process disturbance, it is important that advanced systems notify the operator of any loss of functioning. The ability of the alarm system to promptly indicate its malfunctions is an important review consideration.

Third, test and maintenance features of the alarm system should be designed so that these activities can be performed with minimal interference with the activities of the operators. Desirable design features may include built-in test capabilities, modular components that can be rapidly removed and replaced, and rear access panels which prevent maintenance activities from obstructing the operator's view of controls and displays.

Guidelines for reviewing these characteristics are provided in Section 4.4.

ALARM RESPONSE PROCEDURES

Alarm Response Procedures (ARPs) provide more detailed information concerning the nature of the alarm condition than is typically provided in the alarm message. Typically, the information provided is alarm source (sensor), setpoint, causes, automatic actions, and operator actions. This information is especially important to operators when an unfamiliar alarm is activated or when an alarm seems inconsistent with the operator's understanding of the state of the plant. ARPs may be hardcopy or computer-based documents.

The following characteristics of ARPs are important:

- ARP information content
- ARP format
- ARP location
- Methods of user access to, and interaction with, ARPs (especially computer-based ARPs)

Guidelines for reviewing ARPs are provided in Section 4.5.

CONTROL-DISPLAY INTEGRATION AND LAYOUT

Control-display relationships and general layout significantly impact the operator's performance with alarm systems, as they do for other aspects of the HSI. The following considerations are important:

- Control console layout of alarm display devices and controls
- Alarm display layouts for VDUs
- Relationship between alarm controls and displays and the associated process indicators and controls
- Physical relationship between the operators and the alarm controls and displays and the associated process indicators and controls

Guidelines for reviewing control-display integration are provided in Section 4. 6.

INTEGRATION WITH OTHER HSI ELEMENTS

The consistency and compatibility of the alarm system with the rest of the HSI can affect the operator's performance and, therefore, should be addressed. Guidelines for reviewing control-display integration are provided in Section 4.7.

4 ALARM SYSTEM
4.1 Alarm System High-Level Functions
4.1.1 Alarm Definition

4.1.1-1 Alarm Selection
The following criteria should be included in the basis for selecting alarm conditions:

- Monitoring critical safety functions and key parameters,
- Preventing personnel hazards,
- Avoiding significant damage to equipment having a safety function,
- Assuring that technical specifications are met,
- Monitoring emergency procedure decision points, and
- Monitoring plant conditions appropriate to plant modes ranging from full power to shutdown.

Additional Information: One of the key aspects of an alarm system is to help ensure that the plant remains within the safe operating envelope as defined by the Safety Analysis Report (SAR) and technical specifications. This includes ensuring that automatic systems can still perform their intended functions to protect the plant and personnel. This assurance can be provided in a number of ways by the alarm system with the monitoring of critical safety functions and key parameters being a typical choice. Selection of alarms should consider all operational modes including shutdown. After a scheme for selecting alarm conditions has been developed and applied, the selected alarm conditions should be reviewed to verify that important aspects of all of the above categories are addressed within the main control room alarm system.[6105, 6684, 0700]

4.1.1-2 Timely Warning
Alarm set points should be determined to ensure that the operating crew can monitor and take appropriate action for each category of alarms, e.g., respond to out-of-tolerance conditions, in a timely manner.
Additional Information: Alarms are established to help ensure that the plant remains within SAR and technical specification limits. In order to achieve this, the setpoints may be specified at conservative levels that are well within the actual limits to allow sufficient response time for operators and plant systems. Thus, where practical, alarm setpoints should be determined such that the operator is alerted before a major system or component problem results in a condition which causes a loss of availability (e.g., plant trip), equipment damage, violation of SAR and technical specification requirements, or other serious consequences. Other criteria are acceptable if they do not compromise these factors.[6105, 0700]

4.1.1-3 Setpoint Determination and Nuisance Alarm Avoidance
The determination of alarm setpoints should consider the trade-off between the timely alerting of an operator to off-normal conditions and the creation of nuisance alarms caused by establishing setpoints so close to the "normal" operating values that occasional excursions of no real consequence are to be expected.
Additional Information: When determining setpoints, consideration should be given to the performance of the overall human-machine system (i.e., operator and alarm system acting together to detect process disturbances). If setpoints are established such that many false alarms occur, operators become less likely to respond to the alarm, especially when their tasks become cognitively demanding. Processing techniques (see Guideline 4.1.2-4) are applied to prevent normal variation from producing alarms. Under some circumstances, however, preventing such alarms may deprive operators of needed information. In cases where raising an alarm's setpoint or delaying its presentation is not acceptable, more sophisticated techniques (e.g., alarms based on rate of change of the parameter or the time at which the parameter is projected to exceed a setpoint) should be considered.[6105, 6684, 0700]

4.1.1-4 Darkboard Configuration

Alarms and setpoints should be designed so that only parameters and conditions that fall outside of the normal and expected range and that require operator attention or action are in the alarm state.

Additional Information: This has traditionally been referred to as the darkboard concept and is applicable when at full power operation. In practice it may be difficult in some plants to completely achieve a darkboard but that should be the goal. If the alarm system does not have this capability for all operating conditions, it should be in effect when all systems are lined up in their most typical configuration for full-power operation.

This concept has implications for the plant's operating philosophy as well, including issues such as (1) repairing failed equipment expeditiously, (2) taking corrective actions for instrument drifts that cause alarms, and (3) correcting conditions that frequently lead to repeat alarms.[0700, 6105]

4 ALARM SYSTEM
4.1 Alarm System High-Level Functions
4.1.2 Alarm Processing

4.1.2-1 Assured Functionality Under High Alarm Conditions
The alarm processing system should ensure that alarms that require immediate action or indicate a threat to plant critical safety functions are presented in a manner that supports rapid detection and understanding under all alarm loading conditions.
Additional Information: Alarm processing should be provided to ensure that alarm functional criteria are not lost under any operational or accident conditions. The alarm system should provide the capability to reduce the number of concurrent alarm messages so that during off-normal conditions, the alarm system does not overload of the operator's cognitive processes. Special attention should be given to the problem of detecting subsequent malfunctions following the presentation of alarms related to an initial disturbance.[6105, 6684]

4.1.2-2 Alarm Reduction
The number of alarm messages presented to the crew during off-normal conditions should be reduced by alarm processing techniques (from a no-processing baseline) to support the crew's ability to detect, understand, and act upon all alarms that are important to the plant condition within the necessary time.
Additional Information: Since there is no specific guidance on the degree of alarm reduction required to support operator performance, the designer should evaluate the system with operators to assess the effectiveness of the alarm reduction process. This assessment should include evaluations that simulate the operation of the alarm system under situations that activate multiple alarm conditions and/or generate increased operator workload. The use of dynamic mockups and prototypes of the alarm system and dynamic control room simulators should be considered when developing these assessments.[6105, 6684]

4.1.2-3 Alarm Signal Validation
Sensor and other input signals should be validated to ensure that spurious alarms are not presented to plant personnel, due to sensor or processing system failure.
Additional Information: Instrumentation failure is not a common problem in NPPs. However, when such failures occur such as a failed sensor, biased or false signals are generated. The use of these signals by the alarm system may result in the presentation of either false or nuisance alarm messages. Such alarm messages are misleading and may interfere with the crew's situation assessment or reduce the crew's confidence in future alarm messages. Signal validation is a set of alarm processing techniques by which signals from redundant or functionally related sensors are compared and analyzed to determine whether a true alarm condition exists. The purpose of these techniques is to prevent the presentation of false alarms to the operator due to malfunctioning plant instrumentation. Hence, signal validation should be included in an advanced alarm system.[6105]

4.1.2-4 Parameter Stability Processing
The alarm system should incorporate the capability to apply time filtering, time delay, or deadbanding to the alarm inputs to allow filtering of noise signals and to eliminate unneeded momentary alarms.
Additional Information: Noise from plant instrumentation may result in signals that momentarily exceed the limit for alarm message activation for a plant parameter. Time delay processing prevents this signal from generating a spurious alarm message to the crew. In some cases, applying these techniques may reduce the timeliness of the information provided to operators. When this tradeoff is not acceptable, other processing methods can be used (see additional information for Guideline 4.1.1-3).[6105, 6684]

4.1.2-5 Segregation of Status Indications

Status indications, messages that indicate the status of plant systems but are not intended to alert the user to the need to take action, generally should not be presented via the alarm system display because they increase the demands on the users for reading and evaluating alarm system messages.
Additional Information: While status information is important to operators, status indications are not alarms and should be presented to operators via a non-alarm display, e.g., on process displays. If the presentation in the alarm display of status indications is justified on the basis of the unique aspects of the design, such status messages should be designed so that operators may readily distinguish them from true alarm messages.[6105, 6684]

4.1.2-6 First-Out Processing

As an aid to diagnostic procedures and root cause analysis, provision should be made for identifying the initiating event associated with automatic plant trips through the use of first-out alarms.
Additional Information: In most conventional alarm systems used in nuclear power plants, first-out alarms, which identified the parameter within an interrelated group that first exceeded its setpoint, were provided to support operators in determining the initiating cause of a reactor or turbine trip. Advanced alarm systems should include this first-out capability along with the results of any additional processing that could improve the identification of the initiating event. First-out alarms work well where all signals respond equally quickly (e.g. electrical 'sequence of events' monitoring), but are not necessarily as useful to operators where response characteristics can be time-variable. This situation arises in process systems because of differential lags in some measurements (e.g. temperature, level) compared to others (e.g. pressure, electrical parameters).[6105, 0700]

4.1.2-7 Mode Dependence Processing

If a component's status or parameter value represents a fault in some plant modes and not others, it should be alarmed only in the appropriate modes.
Additional Information: The following is an example of mode dependent processing. The fact that a particular pump has shutdown may only have operational significance to the crew when the plant is operating in the power range. Mode dependent processing would allow this alarm message to be presented when the plant is in the power range but not when it is in other modes (e.g., hot standby). Strategies have also been described in which different alarm setpoints are in effect for some parameters depending on plant mode. When there may be mode-dependent changes in the alarm system's responses the cautions contained in Guideline 4.3.6-3 should be considered.[6105, 6684]

4.1.2-8 System Configuration Processing

If a component's status or parameter value represents a fault in some system configurations and not others, it should be alarmed only in the appropriate configurations.
Additional Information: The following is an example of system configuration processing. The fact that a particular pump has a low discharge pressure may indicate that the pump is not running or it might only indicate a fault when the associated fluid system is configured to perform a particular function. Other discharge pressures may be appropriate when the fluid system is configured to perform a different function. In addition, a low pump discharge pressure may not be relevant when the fluid system is taken out of service. System configuration processing would allow the alarm message for pump discharge pressure to be presented when the fluid system is in the proper configuration and prevent its presentation when the system is in an alternate configuration.[6105, 6684]

4.1.2-9 Logical Consequences Processing

If a single event invariably leads to subsequent alarmed events that are the direct consequence of this event, only the alarm message associated with the main event may be presented and the other alarm messages suppressed, so long as this does not interfere with the use of alarm information.
Additional Information: For example, logical consequences processing may be used to suppress alarms that follow as a logical consequence of trip or isolation conditions. When implementing logical consequences processing, the designer should ensure that messages associated with the "consequence" alarm conditions are not needed for other operational tasks, and that operators are aware that the associated "consequence" alarm conditions were generated but not presented. This guideline only suggests suppression of these alarms, not their complete elimination (i.e., filtering).[6105, 6684]

4.1.2-10 Exceptions to Expected Alarm Patterns

The system should notify the user when 'unexpected' alarms occur, if the alarm processing logic can support such an analysis.
Additional Information: A related feature that may also be considered is to annunciate the absence of expected alarm patterns; i.e., the system can notify the operator when 'expected' alarms do not occur, if the alarm processing logic can support such an analysis. Such analyses may apply, for example, during certain transients (e.g., reactor scram) where the expected alarm pattern is well known.[6105]

4.1.2-11 Intelligibility of Processed Alarm Information

The alarm system should provide functions that enable users to evaluate the meaning or validity of the alarm messages resulting from alarm processing; for example, it should be possible to view the inputs to the alarm processing system.
Additional Information: Complexity of the processing impacts the operator's ability, as the system supervisor, to understand the results of alarm processing and its constraints and limitations. Since the alarm system is the operator's first indication of process disturbances and operators will confirm the validity of alarm signals prior to taking action, it is essential that operators easily comprehend the meaning of alarm data, how they are processed, and the bounds and limitations of the system. An alarm system that combines multiple processing methods should not be so complex that it cannot be readily understood and interpreted by the operators who must rely on the system's outputs. If operators are unaware of the relationships among displayed alarms and how those relationships might depend on the processing being applied, they may draw incorrect conclusions about the state of the system or the reliability of the alarms. For example, operators may need to view sensor data and values that result from alarm system processing under certain circumstances, such as if the pattern of alarm messages appears to be contradictory, or if operators suspect that there is a problem with the processing system such that the results of alarm processing are incorrect.[6105, 6684]

4.1.3-1 Prioritization Criteria

Alarm messages should be presented in prioritized form to indicate urgency (immediacy of required action) and challenges to plant safety.

Additional Information: Additional alarm priority dimensions, such as challenges to plant productivity or investment protection, may also be implemented. The selected prioritization scheme should be logical such that those alarms of the highest safety significance receive the highest priority and such that the prioritization appears reasonable to operators.[6105, 6684, 0700]

4.1.3-2 Access to Suppressed Alarms

When alarm suppression is used, the user should be able to access the alarm information that is not displayed.

Additional Information: Suppressed alarms are not presented to the operators, but they can be accessed by operators upon request. The method for accessing suppressed alarms and the scheme for their presentation to the operators should not be excessively complex.[6105, 6684]

4.1.3-3 Filtered Alarms

Alarm filtering should only be employed where alarm messages have no current operational significance to the crew's monitoring, diagnosis, decision making, procedure execution, and alarm response activities.

Additional Information: As the term is used here, filtered (as contrasted with suppressed) alarm messages are eliminated and are not available to the operators. Research has indicated that operators prefer to have information available to them to support verification and decision-making activities. Thus, only alarms that can be demonstrated to have no operational significance to operators should be filtered. This includes alarm messages that are irrelevant within the context of the current plant mode or the configuration of the associated plant system. For example, alarm messages that indicate that a pump discharge pressure is low after the fluid system has been removed from service should be filtered. Alarms that are considered redundant or lower priority should be suppressed (where operators can retrieve them) rather than filtered.[6105, 6684]

4 ALARM SYSTEM
4.2 Information Display
4.2.1 General Alarm Display Guidelines

4.2.1-1 Display Functions
The alarm display should support the user's ability to rapidly discern:
- Priority (e.g., urgency for action and importance to plant safety);
- Distinct alarm states: new, acknowledged, and cleared;
- The first-out alarms for reactor trip;
- The need to access other displays to verify or clarify the alarm state; and
- The difference between alarms which can be cleared through ongoing corrective actions (i.e., by operations personnel) and alarms that require significant maintenance intervention.

Additional Information: Multiple alarm display formats, such as dedicated tile-like display and message lists, may be necessary to satisfy all alarm information needs.[0700, 6105, 6684]

4.2.1-2 Coordination of Alarm Alerting and Informing Functions
When alarm alerts are displayed separately from detailed alarm information, the design should support rapid transitions between alerts and detailed information.
Additional Information: In conventional annunciator tile-based alarm systems, the annunciator tile performs both the alerting function (i.e., providing a salient indication of the presence of an alarm condition) and the informing function (i.e., providing information that describes the nature of the alarm condition). In advanced alarm systems, the alerting and informing functions may be separated. For example, an alarm tile display may alert the operator to the presence of an alarm condition while an alarm message list display may provide detailed information such as the alarm parameter name and setpoint value. The presentation of the alerting and informing information should be coordinated so the operator can rapidly access detailed alarm information associated with the alarm condition alerts.[6105, 6684]

4.2.1-3 Presentation of Alarm Priority with Detailed Alarm Information
When alarm alerts are displayed separately from detailed alarm information, the detailed alarm information display should provide an indication of the priority and status of the alarm condition.
Additional Information: The operational significance of the detailed alarm information, such as the parameter name and the exceeded setpoint value, may be more readily apparent to the operator when accompanied by an indication of alarm's priority and its status (e.g., whether it is acknowledged or unacknowledged).[6105, 6684]

4.2.1-4 Use of Spatially Dedicated, Continuously Visible Displays
Spatially dedicated, continuously visible (SDCV) alarm displays should be considered for:
- Regulatory Guide 1.97 Category 1 parameters,
- Alarms that require short-term response,
- The most important alarms used in diagnosing and responding to plant upsets, and
- The most important alarms used to maintain an overview of plant and system status.

Additional Information: Spatial dedication means that the alarm messages always appear in the same position. Continuously visible means a parallel presentation method is used, i.e., the alarm information is always available to the operator, as opposed to serial presentation methods in which the operator must select the information to be seen. A SDCV alarm display (such as is provided by conventional tiles) generally has been found during high-density alarm conditions to be superior to other forms of alarm presentation, such as message lists. SDCV displays provide perceptual advantages of rapid detection and enhanced pattern recognition.[6105, 6684]

4.2.1-5 Alarm Coding Consistency

Coding (e.g., flash-rate, intensity, and color coding) conventions should be consistently applied throughout alarm displays (e.g., on tiles and on VDUs).[6105]

4.2.1-6 Multi-Unit Alarms

Alarms for any shared systems in multiple-unit plants should be duplicated in all control rooms.
Additional Information: Multiple-unit NPPs may contain systems that are shared by two or more units. The status of any such equipment should be provided in all control rooms. When an item of shared equipment is being operated from one control room, a status display or signal should be provided in all other control rooms where the condition of the equipment is operationally relevant (e.g., other locations from which the equipment could be controlled).[0700]

4 ALARM SYSTEM
4.2 Information Display
4.2.2 Display of High-Priority Alarms

4.2.2-1 Precedence for Important Information

Alarms that have higher importance or greater safety significance should be given greater priority in their presentation than less important or significant alarms.

Additional Information: The priority of presentation should be part of an overall process for alarm management, which may include coding for the level of importance or priority, and alarm processing, filtering, and suppression.[6105]

4.2.2-2 Simultaneous Display of High-Priority Alarms

For non-spatially dedicated alarm presentations such as VDU message lists, sufficient display area should be provided for the simultaneous viewing of all high-priority alarms.

Additional Information: Non-spatially dedicated alarm displays, such as message lists, should generally not be used as the primary method of presenting high-priority alarm messages. If non-spatially dedicated alarm displays are used, they should have sufficient display space available for simultaneous presentation of all high-priority alarms under the worst credible conditions. Operators should never have to page or scroll a display to view high-priority alarms.[6105, 6684]

4.2.2-3 Coding of Alarm Priority

A method of coding the visual signals for priority should be employed.

Additional Information: Acceptable methods for priority coding include color, position, shape, and special symbols. Color and position (top to bottom) are especially effective visual coding methods.[6105]

4.2.3-1 Indication of Alarm Status

Unacknowledged, acknowledged, and cleared alarm states should have unique presentations to support the users' ability to rapidly distinguish them.[6105]

4.2.3-2 Unacknowledged Alarm Indication

Unacknowledged alarms should be indicated both by visual (e.g., flashing) and audible means.
Additional Information: When unacknowledged alarm messages are presented on a VDU, the message text itself should not flash. Rather, an adjacent flashing symbol should be used to indicate the unacknowledged message (see Guideline 1.3.10-10, Flash Coding for Text). [6105, 6684]

4.2.3-3 Notice of Undisplayed Unacknowledged Alarms

If the user is not currently viewing the VDU display where unacknowledged alarm messages appear, the alarm system should notify the user that an alarm message is available, the priority of the alarm message, and the location where the alarm message can be found.[6105]

4.2.3-4 Acknowledged Alarm Indication

After the user has acknowledged an alarm (e.g., pressed the acknowledge button), the alarm display should change to a visually distinct acknowledged state.[6105]

4.2.3-5 Clearing Alarm Ringback

When an alarm clears (i.e., the parameter returns to the normal range from an abnormal range), the return to normal conditions should be indicated by visual and audible means.
Additional Information: Ringback, alerting the operator when a parameter returns to normal, should not be required for all alarms but should be required when it is important that the operator know immediately when the deviation has cleared, or when the deviation is not expected to clear for some time. Such cleared alarms should provide a positive indication by initiating audible and visual signals. Techniques that may be employed include: a special flash rate (one-half the normal flash rate is preferred, to allow discrimination); reduced brightness; or a special color. Cleared alarms should have a dedicated, distinctive audible signal, which should be of finite and relatively short duration.[6105, 0700]

4.2.3-6 Cleared Alarms That Re-Enter the Abnormal Range

If an alarm has cleared but was not reset and the variable re-enters the abnormal range, then the condition should be presented as a new alarm.
Additional Information: When an alarm clears, the operator is informed via the ringback feature that the value is now in its normal range. Since the operator might expect the parameter to remain in the normal range, the alarm system should alert the operator when the parameter deviates from the normal range. If the variable again enters the abnormal range, the alarm system should behave as it does for new alarms, by producing visual and auditory signals to alert the operator. For cases in which a variable might move (e.g., oscillate) in and out of the normal range, alarm processing should be used to prevent the frequent reoccurrence of the alarm from becoming distracting to the operator. One technique might be to require the parameter to move further into the normal range before the alarm clears. Another technique might be to require the parameter to remain within the normal range for a particular amount of time before allowing the alarm to clear.[6684]

4.2.4-1 Minimize Shared Alarms

Alarms that are triggered by any one of an aggregate of individual alarms (e.g., 'Pump Trouble') and which require the operators to perform additional actions to determine the cause should be limited.
Additional Information: This guideline does not apply to the use of alarm processing through which individual alarms are logically processed to provide more operationally meaningful, higher-level alarm messages. By contrast, shared alarms are defined by the activation of one or more of a set of different process deviations. For example, a "trouble" message may combine several potential problems associated with a single plant system or component, or it may address the same problem for a group of similar components (e.g., a bearing temperature alarm may address bearings from more than one component). When shared alarms are used, an inquiry capability should be provided to allow the operator to obtain specific information about which of the ganged parameters exceeded its setpoint. Criteria for the use/avoidance of shared alarms are given in Table 4.1. In traditional (i.e., tile-based annunciator) alarm systems, shared alarms imposed additional workload on the operator compared to single alarms because the operator had to identify the deviant parameter(s). This type of shared alarm should be minimized in advanced alarm systems. Some advanced alarm systems automatically present information related to the deviant parameter when the shared alarm is initiated. This reduces the operator workload associated with retrieving alarm information and minimizes the negative effects of shared alarms.[6105, 6684, 0700]

Table 4.1 Shared alarm considerations

TYPES OF ALARMS THAT MAY BE CONSIDERED FOR COMBINATION (SUBJECT TO THE RESTRICTIONS LISTED BELOW)

- Alarms for the same condition on redundant components, or logic trains, when each has a separate indicator and the indicators are placed in close proximity on the console (e.g., pump A or B trip, logic train A or B actuation)
- Alarms for several conditions relating to one component or several redundant components, which require the operator to obtain further diagnostic information either by sending an auxiliary operator out to the component(s) or checking the computer (e.g., pump A or B trouble)
- Alarms for several conditions that call for the same corrective action
- Alarms that summarize single-input alarms elsewhere in the control room

CONDITIONS UNDER WHICH ALARMS SHOULD NOT BE COMBINED

- Different actions are to be taken depending on which alarm condition exists <u>and</u> information is not readily available to the operator to identify which constituent is alarming
- Information or protection for other alarm constituents is not available to the operator after any one alarm constituent has activated the combined alarm (reflash can provide such protection as discussed in Guideline 4.2.4-3)
- The constituent conditions are not of the same importance

4.2.4-2 Access to Shared Alarm Information

The system should allow users to access the individual alarm information when a shared alarm activates.
Additional Information: The information could be provided by means of alarm messages on a VDU, an alarm list on an alarm printer, or by other means. This information may be provided automatically or by operator action.[0700]

4.2.4-3 Shared Alarm Reflash

If a new parameter deviation has occurred before a preceding alarm has cleared, the shared alarm should return to the new alarm state (e.g., flashing).
Additional Information: The alarm logic system should provide the capability to "reflash" (i.e., reactivate the visual and audible alert indications for the alarm) when subsequent alarm conditions occur after the initial alarm condition has been acknowledged.[6105, 0700]

4.2.5-1 Alarm Titles/Legends

Titles/legends should be clearly understandable, use standard terminology, and address conditions specifically.
Additional Information: For example, specifically identify the parameter and state (e.g., HIGH PRESSURE) instead of using one legend for multiple parameters or multiple states (e.g., TEMPERATURE-PRESSURE or HIGH-LOW).[0700]

4.2.5-2 Alarm Messages – SDCV Tile Format

The format of messages on alarm tiles or tile-like displays should be consistent for all alarms.
Additional Information: Information on a tile might be organized as follows: top line, name of alarmed parameter; middle line, alarm setpoint value; bottom line, indication of severity.[6105]

4.2.5-3 Alarm Messages – List or Printer Format

The format of printed alarm lists should be consistent with that of VDU and SDCV displays.[6105]

4.2.5-4 Alarm Source

The content of each message should provide information that identifies the alarm source.
Additional Information: Information should be available as to which specific sensor (or group of sensors) supplied the alarm signal.[6105]

4.2.5-5 Alarm Priority

An alarm message should indicate its priority.[6105]

4.2.5-6 Setpoint Values

If an alarm condition requires verification before action is taken, the relevant setpoint limits should be included in the alarm message when alarm information is presented on a VDU or is printed.[6105]

4.2.5-7 Parameter Values

Deviant parameter values should be included in the alarm message when alarm information is presented on VDU or printer displays.[6105]

4.2.5-8 Required Immediate Actions

Immediate actions should be presented or made available directly upon request when alarm information is presented on VDU or printer displays.
Additional Information: To support the general alarm system function of guiding the operator's response to an alarm, the immediate actions should be provided to the operator. For conventional alarm systems, the immediate operator actions should be available in Alarm Response Procedures that are clearly and simply keyed to an alarm tile and located nearby for easy and quick reference. In this case, the procedure would contain those items that could not be incorporated into the alarm display itself (e.g., alarm source, setpoint value, immediate actions, and follow-up actions). Advanced alarm systems may present the relevant alarm response procedure (e.g., via a nearby VDU).[6105]

4.2.5-9 Reference to Procedures

When alarm information is presented on VDU or printer displays, references to alarm response procedures should be provided.

Additional Information: The document title, major section, and page number should be included in such references.[6105]

4.2.5-10 Reference to Other Panels
Alarms which refer the user to another, more detailed display located outside the main operating area should be minimized.
Additional Information: Advanced alarm systems should be designed such that required information is readily accessible from within the main operating area.[0700]

4.2.6.1-1 Coding Effectiveness
The coding scheme used by the alarm system should assure rapid detection and interpretation by the users under all control room operating conditions.[0700]

4.2.6.1-2 Coding Dimension Discriminability
Each level of a coding dimension should be easily and readily distinguishable from the other levels.
Additional Information: For example, if color is used, the different colors should be easily discriminated. Each color should have a single, precise meaning that is consistent with applicable population stereotypes. A formal coding scheme that encompasses all coding methods (e.g., color, shape, brightness, textures/pattern, and flash rates) and specifies a hierarchical order should be established and formally documented. Alarms should be organized into categories according to priority. Coding should be systematically applied such that alarm information with the highest priority is also most prominent.[6105]

4.2.6.1-3 Single Coding Dimensions
Each technique used to code alarms should represent only one dimension of the alarm classification.
Additional Information: If flash rate is being used to indicate alarm state (e.g., unacknowledged, acknowledged, or cleared), it should not also be used to indicate need for user action (e.g., immediate action required, action required within 15 minutes, or no near- term action needed).[6105]

4.2.6.1-4 Coding Complexity
The number of different coding techniques should be kept to a minimum, so that the coding system does not become too difficult to use or understand.[6105]

4.2.6.2-1 Visual Coding for Importance

A visual coding method should be used to indicate alarm importance and should be consistently applied throughout the alarm system.

Additional Information: To be effective, an alarm system should attract attention and help the operator focus attention on more-important rather than less-important alarms. A flashing visual signal is a preferred means for directing attention and indicating alarm status (e.g., unacknowledged, acknowledged, and cleared-not reset) on SDCV and computer-based displays.[6105]

4.2.6.2-2 Redundant Priority Coding

Redundant codes (e.g., color and location) should be used for alarms that require rapid action.[6105]

4.2.6.2-3 Flash Rate

Flash rates should be from three to five flashes per second with approximately equal on and off times.[0700]

4.2.6.2-4 Brightness Levels for Transilluminated Displays

For transilluminated displays, such as lighted alarm tiles, the luminance of the dim state (if used) should be at least 10 percent greater than the inactivated state; the brightest state should not be more than 300 percent of the surrounding luminance.

Additional Information: Transilluminated displays should have no more than 3 levels. Brightness of 'on' alarms should not be annoying or distracting.[6105]

4.2.6.2-5 Brightness Levels for VDU Displays

For VDU displays, the bright state should be at least 100 percent brighter than the normal state.

Additional Information: VDU displays should be limited to only two levels.[6105]

4.2.6.2-6 Color Detectability

Low-intensity indications (e.g., dark red) in the periphery of the visual field should be avoided where color coding is used, since they may not be readily detected.

Additional Information: If the display system has an area that is a specific focus of attention, then displays located in adjacent areas may be frequently in the periphery of the operator's field of vision.[6105]

4.2.6.2-7 Spatial Coding

Spatial coding may be used to indicate alarm importance.

Additional Information: Spatial coding is related to alarm organization, which is addressed in Section 4.5.7.[6105, 6684]

4.2.6.2-8 Suppressed Visual Codes

If the visual codes indicating alarm status are automatically suppressed or delayed during high alarm volume conditions or the presence of more important alarms, they should be automatically presented after the more important alarms have been addressed.

Additional Information: Under high alarm volume conditions, the designer may consider suppressing or delaying the alerting indications (e.g., visual flashing) for those alarm conditions that (1) do not require immediate response, and (2) do not indicate a challenge to plant safety and technical specifications. This will assist operators in detecting the more significant alarm messages and reduce distraction from less important ones. Plant personnel should not be required to remember to request alarms that have been automatically suppressed.[6105]

4.2.6.3-1 Audio Signals for Alarms
An auditory signal should be used to alert the user to the existence of a new alarm, or any other condition of which the user must be made immediately aware.
Additional Information: Auditory cues should be provided for all new alarms under normal operating conditions. However, under off-normal conditions where high alarm density exists, the designer should consider suppressing the auditory signal for those alarmed conditions that (1) do not require immediate response and (2) do not indicate a challenge to plant safety and technical specifications. For example, audio signals associated with clearing alarms might be omitted under certain circumstances. This will prevent operators from being distracted by less important alarms while attending to more significant ones. Some designs may have a timed audible signal rather than one that is continuous until acknowledged. In this case, see the guideline for reminder audible signals, below.[6105]

4.2.6.3-2 Auditory Coding of Remote Alarms
Auditory coding techniques should be used when the workstation associated with the alarm is not in the main operating area.
Additional Information: During off-normal conditions, the designer should consider the suppression of the auditory code for those alarms that (1) do not require immediate response and (2) do not indicate a challenge to plant safety and technical specifications. This will prevent operators from being distracted by less important alarms while attending to more significant ones.[0700]

4.2.6.3-3 Distinguishable Auditory Signals
The auditory signal associated with a SDCV alarm should be easily distinguishable from the auditory signal associated with an alarm message displayed by other means (e.g., on a VDU message display).[6105]

4.2.6.3-4 Audible Signals for Alarm States
The tones used for incoming alarms should be separate and distinct from tones used to signify "clearing" alarms.[6105]

4.2.6.3-5 Reminder Audible Signals
If the tone associated with an unacknowledged alarm automatically turns off after an interval of time, a reminder tone should be presented to alert the user to the continued presence of an unacknowledged alarm.
Additional Information: The same principle holds for alarms that may have had the auditory code suppressed because of high alarm conditions or the presence of more important alarms. When the more important alarms have been addressed, the alarm system should remind the operator, via visual or auditory signals, of the presence of the unacknowledged alarms.[6105]

4.2.6.3-6 Reset of Auditory Alert
The auditory alert mechanism should automatically reset when it has been silenced.[0700]

4.2.6.3-7 Interference Among Signals
Audio alarm signals should not conflict with other auditory codes or signals.

Additional Information: If continuous, relatively loud signals are used, they may render other codes and signals less audible. Thus, it may be necessary to consider the audibility of a signal not just in the presence of ambient control room noise, but also in combination with other signals that might plausibly occur at the same time. To avoid mutual masking, the frequencies of tonal signals associated with alarms that may be active at the same time should be separated by at least 20 percent of the center frequency. Interference among alarm signals is less of a concern if the signals consist of a number of widely separated frequency components or of brief groups of pulses presented at intervals. Techniques are available that allow the audibility of signals in noise to be predicted.[6105, 6684, 0700]

4.2.6.3-8 Readily Identifiable Source

The user should be able to quickly determine where to direct attention (e.g., which functional area of the plant or which station) from the characteristics of the auditory alert and/or the source from which the auditory alert originated.

Additional Information: This guideline pertains to the use of auditory tones to direct the operator to the location of a spatially fixed alarm display device in order to expedite the operator's response to the alarm condition. The use of sound to indicate the location of the alarm display may be of less value if the advanced alarm system allows the same alarm message to be retrieved from multiple locations (e.g., from redundant VDUs) in the control room. It should also be noted that in advanced control rooms that feature compact control consoles, the alarm display devices may not be physically separated enough to use sound localization as a cue. In this case, coded audio signals (possibly from a single source) would be used to direct the operators' attention. Thus, this guideline is most appropriate for advanced alarm systems that feature spatially fixed alarm display devices. It has been recommended that coded signals from a single audio source should not be used to identify individual workstations within the main operating area, and that each major console should be equipped with a separate sound generator capable of producing a distinctive sound. If the direction of a source sound is to be used as a cue, the signal should not be a high-frequency pure tone, since such signals can be difficult to localize.[6105, 6684, 0700]

4.2.6.3-9 Signal Level

The signal intensity should be such that users can reliably discern the signal above the ambient control room noise.

Additional Information: The intensity of an audio signal should be such that users are alerted aurally to an alarm occurrence under the most adverse anticipated background noise conditions. A signal level 10 dB(A) above average ambient noise is generally considered adequate. It has also been recommended that sound intensity should be limited to a maximum of 95 dB(A), but that signal levels of 115 dB(A) may be used if considered absolutely necessary to achieve required attention-getting reliability for alarms indicating extreme danger. The tendency for designers to err on the side of conservatism results in many audio signals being more intense than is necessary to ensure reliable detection (see Guideline 4.2.6.3-10, Design of Audio Signals).[6105, 0700]

4.2.6.3-10 Design of Audio Signals

Audio signals should be designed to minimize irritation and startle.

Additional Information: Signals should reliably capture the user's attention but should not be unpleasant. Considerations include the selection of signal frequency and intensity, and the overall design of the audible alarm scheme.[6105, 0700]

4.2.6.3-11 Manual Disable/Adjustment of Signal Intensity

Manual disable or adjustment of auditory signal intensity (loudness) should be avoided.

Additional Information: The need to adjust auditory signal level can be alleviated by improved signal design and level selection. If signal level is adjustable, it should be controlled by administrative procedure. Under no circumstances should users be able to disable audio alarm signals or reduce their level so as to render them inaudible.[6105, 0700]

4.2.6.3-12 Sound Sources
The number and placement of loudspeakers should be such that auditory signals are free of distortion and are equally audible at any workstation in the control room.
Additional Information: Speakers should be oriented away from surfaces that could scatter or diffuse the acoustic wave. Speakers should not be located behind structures that could cause distortion, echoes, or sound shadows. When sound localization is used to direct the operator to particular alarm display devices, the loudspeakers should be oriented such that their location can be quickly discerned and corresponds to the location of the intended alarm display device. Loudspeakers for adjacent alarm display devices should have adequate separation to allow their individual locations to be discerned.[6105, 0700]

4.2.6.3-13 Auditory Signal Discriminability
Each audio signal should be unambiguous and easily distinguishable from every other tone in the control room.
Additional Information: Current sound generation technology allows the design of alarm signals that make better use of the operator's ability to process audio information. It is possible to design signals that are not only more discriminable from one another than are conventional signals, but also have the potential to carry more information. Signals should be composed of unique combinations of tone pattern and frequency. See also Guideline 4.2.6.3-8.[6105, 6684, 0700]

4.2.6.3-14 Number of Tonal Signals
When information is coded by the pitch of narrow-band signals (i.e., tones), no more than three frequencies should be used.
Additional Information: The frequencies should not be in a ratio of 2:1 with one another, since it can be difficult to identify pitches an octave apart. Although some sources recommend that no more than five separate frequencies should be used, operators may not reliably distinguish among more than three pitch codes. For critical alarms with differing response requirements, the more conservative guidance should be followed. If more than three critical alarms are to be coded, it is preferable to combine pitch with another dimension to create more distinctive signals. See Guideline 4.2.6.3-13.[6105]

4.2.6.3-15 Frequency of Tonal Signals
Center frequencies should be widely spaced within a range of from 500 to 3,000 Hz, although a wider range of from 200 to 5,000 Hz may be acceptable.
Additional Information: It is recommended that tonal signals be broad band and widely spaced within the 200 to 5000 Hz range.[6105]

4.2.6.3-16 Pulse Codes
No more than three pulse repetition rates should be used for coding purposes.
Additional Information: Repetition rates should be between 1 and 8 pulses per second, since faster rates may not be perceived as pulses. Repetition rates should be sufficiently separated (e.g., differ by a factor of 2) to ensure operator discrimination. Sounds with the same temporal pattern, including signals with similar duty cycles (on-off times), may be confused, despite having very different pulse speeds (i.e., periods). Such signals are therefore more appropriate for coding the level of urgency of a condition than for indicating different types of conditions.[6105, 6684, 0700]

4.2.6.3-17 Number of Frequency Modulated Signals
No more than three modulated frequency codes for audible alarms should be used.
Additional Information: Warbling sounds, with frequencies modulating from 1 to 3 times per second, are attention-getting as well as easily recognized, whereas slower modulation rates do not develop distinguishable characteristics rapidly enough to be appropriate for alerting applications.[6105]

4.2.6.3-18 Center Frequency of Frequency Modulated Signals
If modulation of frequency (Hz) of a signal is used to denote information, the center frequencies should be between 500 and 1000 Hz.[0700]

4.2.6.3-19 Audio Pattern Codes
If sequences of tones are used to represent information, the patterns should be easily recognizable.
Additional Information: Warning sounds consisting of "bursts" composed of five or more brief pulses (about 0.1 second in duration) with inter-pulse intervals of .15 to .3 seconds have been recommended. The pulses may be designed to be distinctive with respect to their onset and offset shaping, fundamental frequency, and harmonic structure. The bursts may vary as to the number of pulses, the tempo at which they are presented, and the rhythmic and pitch contours.[6105]

4.2.6.3-20 Compound Codes
A maximum of nine auditory signals should be used when coded in two or more dimensions.
Additional Information: When signals differ in two or more dimensions (e.g., pitch and temporal pattern), a greater number of signals can be reliably distinguished. This maximum includes auditory signals used outside of the control room (e.g., fire alarm or site emergency alarm).[6105, 6684]

4.2.6.3-21 Intensity Coding
Coding of auditory signals by intensity (loudness) should not be used.
Additional Information: The range of intensities between the level required to ensure audibility and the level at which signals become aversive can be relatively narrow; the usefulness of this dimension for coding is therefore limited. If such coding must be used, no more than two levels should be defined. The signals should differ from each other by a minimum of 6 dB(A). The lower intensity should be about 10 dB(A) above the ambient noise level, and the maximum signal-to-noise ratio should be 10 dB(A) for most applications of sound intensity coding. It is recommended that sound intensity should be limited to a maximum of 95 dB(A), but that signal levels of 115 dB(A) may be used if considered absolutely necessary to achieve required attention-getting reliability for alarms indicating extreme danger. Whether this coding would be effective would depend on the frequency spectrum of the ambient control room noise and the frequency of the signal.[6105, 0700]

4.2.6.3-22 Speech Presentation of Alarm Information
Using speech alone for presenting alarm information is not recommended.
Additional Information: Speech is an acceptable medium for presenting interface-related information (see Section 1.2.12, Speech Displays), and there may be advantages associated with using speech for presenting alarm information as well. However, its appropriateness has been questioned for tasks where there is a memory component, there is likely to be some delay before the fault is attended to, there is likely to be more than one alarm presented at a time, and the operator is required to assimilate information from a variety of sources using spatial reference. Therefore, it has not yet been shown that it is an appropriate method for presenting alarm information in process control contexts. Speech should only be used in conjunction with other methods of presenting alarm information.[6684]

4 ALARM SYSTEM
4.2 Information Display
4.2.7 Organization of Alarms
4.2.7.1 Spatially Dedicated, Continuously Visible Alarm Displays

4.2.7.1-1 Functional Grouping of Alarms
Alarms within a display should be grouped by function, system, or other logical organization.
Additional Information: Alarm elements should be grouped so that system functional relationships are readily apparent. For example, area radiation alarms should be grouped on one display, not spread throughout the control room. As much as possible, the alarms should be grouped with controls and displays of the same system.[6105, 6684, 0700]

4.2.7.1-2 Visual Distinctness of Functional Groups
Alarm functional groups should be visually distinct from one another.
Additional Information: Although the concept of functional grouping is typically applied in the context of spatially dedicated, continuously visible displays, it can be applied to alarm lists as well. Segregating alarm messages by plant system may allow operators to direct their attention more effectively, especially when individual members of a crew are assigned principal responsibility for different plant systems.[6105, 6684]

4.2.7.1-3 Group Labels
System/functional groups should be clearly delineated and labeled such that the operating crew can easily determine which systems have alarms that have not yet cleared and which system is affected by a particular incoming alarm.[6105]

4.2.7.1-4 Coordinate Designation Identifiers
If alarm displays are organized in matrices, the vertical and horizontal axes of the displays should be labeled with alphanumerics for ready coordinate designation of a particular visual element.[0700]

4.2.7.1-5 Density of Alarm Elements
An alarm tile display matrix should contain a maximum of 50 alarms.
Additional Information: Matrices smaller than 50 alarms are preferred.[0700]

4.2.7.1-6 Logical Arrangement of Alarms
Alarms should be ordered to depict naturally occurring relationships.
Additional Information: Naturally occurring relationships (e.g., those derived from the physical process) include the following:

- pressure, flow, level, and temperature alarms in fluid systems;
- alarms for a given thermodynamic parameter at different points within the system that indicate a progression (e.g., within a fluid system, a series of pressure alarms starting with the source tank and ending with the system discharge);
- several alarms for the same variable indicating levels of severity (e.g., tank level low and tank level low-low); and
- alarms related by cause and effect.

For example, pressure, flow, level, and temperature could be arranged left-to-right.[6105]

4.2.7.1-7 Consistent Ordering
Alarm parameters (e.g., pressure, flow, level, and temperature) arranged in one order on one panel should be arranged in the same order on other panels.

4 ALARM SYSTEM
4.2 Information Display
4.2.7 Organization of Alarms
4.2.7.1 Spatially Dedicated, Continuously Visible Alarm Displays

Additional Information: Circumstances may dictate different orderings for systems with very different functions. However, once an arrangement has been chosen, the arrangement should be used consistently within similar systems or alarm groups.[6105]

4.2.7.1-8 Alarm Display Identification Label
Each group of alarm displays should be identified by a label above the display.
Additional Information: A group of displays could be a panel of tiles or a group of tile-format VDU displays.[0700, 6105]

4.2.7.2-1 Listing by Priority

Lists of alarm messages should be segregated by alarm priority with highest priority alarms being listed first.[6105]

4.2.7.2-2 Message Listing Options

In addition to priority grouping, users should have the capability to group alarm messages according to operationally relevant categories, such as function, chronological order, and status (unacknowledged, acknowledged/active, cleared).
Additional Information: For example, it should be possible to list alarm messages in chronological order with the most recent messages placed at the top of the stack (i.e., alarm messages entered in a pushdown stack mode). Grouping alternatives should not interfere with the detection of high-priority alarms. The grouping should be easy to implement.[6105, 6684]

4.2.7.2-3 Blank Lines

Alphanumeric alarm lists should have a separation (blank row) between every four or five alphanumeric messages.[6105]

4.2.7.2-4 Scrolling of Message List

The method of adding alarm messages to the list should preclude message scrolling.
Additional Information: Scrolling makes it difficult to read alarm messages, especially when many alarms are coming in. An alternative method of viewing alarm lists, such as paging, is preferred.[6105]

4.2.7.2-5 Message Overflow

Alphanumeric alarm messages that overflow the first page of alarm messages should be kept on subsequent alarm pages.
Additional Information: Important alarm information should not be truncated solely because the immediate display space is exceeded. In addition, the alarm system should clearly indicate that additional information is available in subsequent pages.[6105]

4.3.1-1 Access to Undisplayed Unacknowledged Alarms

A VDU-based alarm system should provide rapid access to any unacknowledged alarm messages that are not shown on the current display.

Additional Information: When an alarm has been indicated, e.g., by an auditory signal, plant personnel should have rapid access to the alarm information that describes the nature of the alarm condition.[6105]

4.3.2-1 Global Silence Capability

It should be possible to silence an auditory alert signal from any set of alarm system controls in the main operating area.

Additional Information: A global silence capability together with separate silence and acknowledge capabilities can be useful during high alarm situations. It can allow the operator to silence many distracting alarms and then acknowledge these alarms at their respective panels. It is not necessary that silence capability be provided only where the specific alarm can be read, so long as the operator is made aware of all alarms that are being silenced. That is, the operator should not be able to silence alarms that cannot be visually detected from the global silence control. The primary purpose of the auditory signal is to alert the operator to a new alarm. Once alerted, the operator refers to visual indications of the specific alarm and its message. The auditory signal can rapidly become distracting and irritating to the operators. It should be possible to silence an audible cue from either a VDU or a tile panel control station (see also Guideline 4.3.5-3).[0700, 6105]

4.3.2-2 Manual Silencing

Auditory signals should be silenced manually unless this interferes with other more critical actions.

Additional Information: While manual silence is a generally desirable feature to get the operator's attention, it may become distracting to manually silence all alarms under high-alarm conditions. Guidelines 4.3.5-3 and 4.3.6-3 address alarm system configuration changes made either automatically or by operator-selection, such as automatic silence of auditory alerts for lower priority alarms under high-alarm conditions.[6105]

4.3.3-1 Effect of Acknowledge Function

An alarm acknowledgment function should cause the alarm's visual coding to change from that indicating an unacknowledged alarm to a visually distinct ' not cleared' state.
Additional Information: For example, the acknowledge function might cause an alarm to change from flashing to steady. (See also Guideline 4.2.3-4.)[0700]

4.3.3-2 Acknowledgment Locations

Acknowledgment should be possible only from locations where the alarm message can be read.
Additional Information: If alarm information is available at multiple VDUs, then operators should be capable of acknowledging the alarm from the VDU at which they are working. If alarm information is presented on a large control room overview display, operators should be able to acknowledge it from alarm control locations where it can be seen. This flexibility will minimize disruption caused by the alarm system interactions. It should not be possible to acknowledge alarms from locations where they cannot be read. If alarms can be acknowledged from multiple locations, then a means should be provided for ensuring that all operators for whom the alarm is important are aware that the alarm occurred. These means may include spoken, telephone, or computer-based communications between personnel.[6105]

4.3.3-3 Acknowledgment of Alarm Messages

Non-SDCV alarms should only be acknowledged when the alarm message is on the screen.
Additional Information: Alternatively, the acknowledgment action may display the alarm message.[6105]

4.3.4-1 Effect of Reset Function

The reset function should place an alarm in an unalarmed state after the condition has cleared.
Additional Information: The reset function should silence any audible signal indicating clearance and should extinguish the light and return the alarm to an inactive state. Note that some alarms may have automatic reset, when it is not necessary that the operators specifically know the reset condition.[0700]

4.3.4-2 Appropriate Use of Manual Reset

A manual reset sequence should be used where it is important to explicitly inform users of a cleared condition that had once been deviant.
Additional Information: An automatic reset sequence should not be used in this situation.[6105]

4.3.4-3 Appropriate Use of Automatic Reset

An automatic reset sequence should be available where users have to respond to numerous alarms or where it is essential to quickly reset the system.
Additional Information: A manual reset sequence should not be used in high-workload situations in which the time and attention required to reset the alarms may detract from other, more-critical tasks.[6105]

4.3.4-4 Reset Function Location

The reset function should be effective only from locations at which plant personnel know which alarm they are resetting.[0700, 6105]

4.3.5-1 User-Selectable Alarm System Configuration

If the alarm system provides user-selectable operational configurations, then these configuration changes should be coupled with an indication of the present configuration.

Additional Information: Alarm systems allow users to select alternative functional configurations of the alarm system under some alarm situations, such as automatic silence of auditory alerts for lower priority alarms under high-alarm conditions. Another example may be operator selection of an alarm message suppression mode in which low priority messages are not presented via the alarm displays but may be accessed through operator action. It is important that the alarm system informs the operators that a requested change in system configuration has been successfully achieved. In addition, a prominent display of the present configuration should be available.[6105, 6684]

4.3.5-2 Acknowledgment of Alarm System Configuration Changes

Acknowledgment (or confirmation) should be required if a significant alarm system configuration change is to be made by user selection.

Additional Information: Alarm systems allow users to select alternative functional configurations of the alarm system under some alarm situations. An example may be operator selection of an alarm message suppression mode in which low priority messages are not presented via the alarm displays but may be accessed through operator action. It is important that the alarm system informs the operators that a requested change in system configuration has been successfully achieved. In addition, a prominent display of the present configuration should be available.[6105]

4.3.5-3 User-Defined Alarms/Setpoints

The alarm system may provide temporary, user-defined alarms and user-defined set points for specific conditions where such alarms are determined to be of assistance in selected evolutions (e.g., temporary alarms to support increased monitoring of a problem component, or at other times when the user wants to know of a parameter trend that is approaching a limit).[6105]

4.3.5-4 Interference of User-Defined Alarms/Setpoints with Existing Alarms

User-defined alarms and setpoints should not override or interfere with the existing alarms and setpoints.[6105]

4.3.5-5 Indication of User-Defined Alarms/Setpoints

The alarm system should provide clear indication of user-defined alarms and setpoints as distinct from the alarm/setpoints designed into the system.[6105]

4.3.5-6 Control of User-Defined Alarms/Setpoints

The definition and removal of operator-defined system characteristics should be under administrative controls.[6105]

4.3.6-1 Automated Alarm System Configuration

If the alarm system automatically changes operational configurations under some alarm situations, then these configuration changes should be coupled with an alert to the user and an indication that the configuration has changed.

Additional Information: Alarm systems may provide automated functions under some alarm situations, such as automatic silence of auditory alerts for lower priority alarms under high-alarm conditions. It is important that operators be notified of the change in system functioning. In addition, a prominent display of the present configuration should be available to remind operators of the current configuration of the system.[6105]

4.3.6-2 Acknowledgment of Automatic Alarm System Configuration Changes

Acknowledgment (or confirmation) should be required if a significant alarm system configuration change is to be made automatically.

Additional Information: Alarm systems may allow users to select alternative functional configurations of the alarm system under some alarm situations, such as automatic silence of auditory alerts for lower priority alarms under high-alarm conditions. It is important that the alarm system informs the users that a requested change in system configuration has been successfully achieved. In addition, a prominent display of the present configuration should be available.[6105]

4.3.6-3 Automatic Mode-Defined Setpoints

The need for operator acknowledgment of system-generated setpoint changes based on plant mode should be evaluated on a case-by-case basis.

Additional Information: Alarm systems may alter setpoints in an effort to minimize nuisance alarms. While such changes may be associated with well-understood, easily recognizable plant conditions, others may be less familiar and not readily understood by plant personnel. In the latter situation, plant personnel may misunderstand the alarm information because they do not realize the setpoints have changed. When this situation is of concern, confirmation of the change should be considered.[6105]

4.3.7-1 Separate Controls for Alarm Functions

Separate controls should be provided for silence, acknowledgment, reset (acknowledging an alarm that has cleared and returning it to normal), and testing.

Additional Information: A global silence capability together with separate silence and acknowledge capabilities can be useful during high alarm situations by allowing the user to silence many distracting alarms and then acknowledge these alarms at their respective panels. A variety of controls is possible, such as pushbuttons, function keys, and on-screen controls.[6105, 0700]

4.3.7-2 Distinct Coding of Control Functions

Alarm system controls should be distinctively coded for easy recognition.

Additional Information: The controls should be distinguishable from each other, by touch and sight, to prevent accidental operation of the wrong control. Such techniques as color coding, color shading the group of alarm controls, demarcating the group of alarm controls, or shape coding should be used.[6105, 0700]

4.3.7-3 Consistent Layout of Control Group

Each set of alarm system controls should have the functions in the same relative locations.

Additional Information: Consistent locations should be established for silence, acknowledge, reset, and test operating sequence controls.[6105, 0700]

4.3.7-4 Separate Controls for Tile and VDU Alarms

If the alarm system contains both alarm tiles and VDU alarm displays, each should have its own set of controls.

Additional Information: If alarm information is presented redundantly on tile and VDU displays, then alarm acknowledgment via one device (i.e., either the VDU or tile panel control station) should cause the redundant alarm to be automatically acknowledged on the other device. All other control actions (acknowledge, reset and test) should be specific to the workstation associated with the alarm (see also Guideline 4.3.2-1).[6105]

4.3.7-5 Defeating Controls

Alarm system control designs should not allow the controls to be altered or defeated.

Additional Information: For example, some pushbuttons used for alarm silencing and acknowledgement can be held down by inserting an object in the ring around the pushbutton. While the controls should be designed to prevent their being defeated, the system should be designed to minimize the desire to do so.[6105, 0700]

4.4.1-1 Design for Reliability

The alarm system should be designed so that no single failure will result in the loss of a large number of alarms.

Additional Information: Also, the failure of a single alarm system component should not result in the loss of an individual alarm important to plant safety.[6105]

4.4.1-2 VDU Reliability

Where alarms are presented on a VDU as the primary display, users should be able to access the alarms from more than one VDU.

Additional Information: Failure of a single VDU should not prevent access to VDU-based alarm presentations at the main workstation. Alarm printer displays should not be the only back-up to a VDU display.[6105]

4.4.1-3 Dual Light Bulbs

Annunciator tile-type displays should be designed with dual light bulbs so that a single bulb failure will not interfere with detection of the alarm condition.

Additional Information: Alarm system displays should be designed with a high level of reliability. In the case of annunciator tile displays, each tile should be illuminated by two or more lights to protect against loss of indication due to failure of one.[6105]

4.4.1-4 Flasher Failure Mode

In case of flasher failure, an unacknowledged alarm should assume a highly conspicuous state such as a steady on (e.g., illuminated) state rather than a less conspicuous state such as off.

Additional Information: While it is preferable in the case of a flasher failure for the associated alarm element to remain on (e.g., illuminated) rather than off, a unique and highly conspicuous code is best. The code should be unique to prevent confusion between unacknowledged and acknowledged alarms. It should be salient to alert the operator to the malfunction of the alarm display system. In addition, other alerting mechanisms such as warning messages may be used to inform the operator of a malfunction in the alarm display system.[0700, 6105]

4.4.2-1 Testing Capabilities

Test controls should be available to initiate operability tests for all essential aspects of the alarm system (including processing logic, audible alarms, and visual alarm indications).

Additional Information: For those portions of the alarm system (such as audible alarms and visual indications), the test capability should be simple and available to the operators. The more complex portions (such as sensor inputs and logic processing) should also be testable, but by I&C technicians and engineers. Advanced alarm systems, having capability for continuous, on-line, self-testing may satisfy some of these recommendations.[0700, 6105]

4.4.2-2 Testing Requirement

Periodic testing of the alarm system should be required and controlled by administrative procedure.

Additional Information: Simple functional tests are normally required once per operating shift. Reliability analyses of the alarm system may be used to determine appropriate intervals and degree of testing to be performed on the alarm system.[0700]

4.4.3-1 Design for Maintainability

The alarm system should be designed so that maintenance activities can be performed with minimal interference with the activities of the users.
Additional Information: Desirable design features may include built-in test capabilities, modular components that can be rapidly removed and replaced, and rear access panels which prevent maintenance activities for obstructing the users' view of controls and displays.[6105]

4.4.3-2 Tagged-Out Alarms

Tagging out an alarm (taking it out of service) should require disabling of the associated visual and audio signals.
Additional Information: A tagged-out alarm should never be lit or flashing, and should never cause any audible device to sound.[6105]

4.4.3-3 Out-of-Service Alarm Indication

Cues for prompt recognition of an out-of-service alarm should be designed into the system.
Additional Information: Tagging out an alarm should not prevent its identification and should not obscure any other alarm or interfere with operations.[6105, 0700]

4.4.3-4 Extended Duration Illumination

If an alarm tile must be 'on' for an extended period during normal operations because of equipment repair or replacement, it should be (1) distinctively coded for positive recognition during this period, and (2) controlled by administrative procedures.[0700]

4.4.3-5 Tile Cover Replacement

If a lamp replacement requires legend tile removal, there should be a way to ensure that the tile is replaced in the correct location.
Additional Information: The alarm element and/or the replacement task should be designed to prevent incorrect positioning of the cover, legend, or tile. For example, annunciator tiles might be permanently marked with a unique identifier specifying their position in the alarm window matrix. Alternatively, it might be administratively required that no more than one tile cover be removed from the matrix at a time.[6105, 0700]

4.4.3-6 Hazard Avoidance

Lamp replacement should not pose an electrical shock hazard.[0700]

4.4.3-7 Aids for Alarm System Maintenance

Aids should be provided, if needed, to assist personnel in performing alarm system maintenance.
Additional Information: Aids include instructions and specialized tools. For example, aids may be needed to support changing of light bulbs in the alarm system.[0700]

4.4.4-1 Alarm System Failure Indication

Users should be given prompt indication of a failure of the alarm system or its major subcomponents.[6105]

4.5-1 ARP Scope

ARPs should be available for alarm conditions that require a response that affects the plant process control system or plant equipment.

Additional Information: Minor alarms associated with data input errors or computer space navigation errors may not require ARPs. In addition, other alarms such as those in alarm systems that are separate from the main process alarm systems and require simple responses, may not need ARPs. In this latter case, the lack of ARPs should be specifically considered and justified.[5908]

4.5-2 ARP Access

Users should have immediate access to ARPs from the location at which the alarm messages are read.

Additional Information: An operator should not be required to leave the location at which the alarm message is displayed in order to access ARP information. In a tile system, the identification and indexing of ARPs should be consistent with the method of identifying the alarm. The means used for identifying row and column locations of alarms should be distinct so that possible confusion of these identifiers is avoided. A computerized system may display the appropriate procedure for a given alarm on a VDU when the operator "selects" the alarm message.[6105, 6684]

4.5-3 ARP Content

ARPs should contain the following information:

- The system/functional group to which the alarm belongs,
- The exact alarm text or legend,
- The alarm source (i.e., the sensor(s) sending the signal, processors and signal validation logic, and the actuating device(s) for the alarm with a reference to a schematic diagram on which such devices can be found),
- Alarm setpoints,
- Priority,
- Potential underlying causes for the alarm (e.g., low water level - inadequate feed flow),
- Required immediate actions, including actions that can be taken to confirm the existence of the alarm condition,
- Actions which occur automatically when the alarm occurs (and which should be verified as having taken place),
- Followup actions,
- Explanations of relevant alarm processing (e.g., comparisons and combinations of plant parameters; alarm filtering and suppression; alarm setpoints that are conditional, such as setpoint values and time delays used to prevent the occurrence of nuisance alarms when a parameter oscillates in an out of the alarm range), and
- Pertinent references.

Additional Information: Users should be given information (such as that associated with 'alarm source' in the guideline) that they can use to confirm the existence of alarmed conditions.[6105, 6684]

4.5-4 Information Consistency with the HSI

Information contained in the ARPs should be consistent with information on control boards, in the alarm system, in I&C procedures used to calibrate alarm setpoints, in controlling documents that determine setpoints (e.g., Technical Specifications and accident analyses), in P&IDs, in emergency operating procedures, and in other plant procedures.[6105]

4.5-5 Presentation Consistency with the HSI

The terminology, conventions, standards, and codes used in the presentation of the ARPs should be consistent with the rest of the HSI.

Additional Information: The ARPs should use the same conventions, such as terminology for plant systems and equipments, identification codes for plant components and parameters, and measurement units, that are used in the main HSI displays and procedures. Defined values, such as alarm setpoints, should be consistent. In addition, information coding schemes used in the ARPs should be consistent with the rest of the HSI. For example, if graphical displays are used in the presentation of the ARPs , then coding conventions, such as symbols, icons and color, should be consistent with the rest of the HSI, such as information presented via plant displays and computer-based systems for emergency operating procedures. For example, if color codes are used to indicate priority, it should have the same meaning across all displays of the HSI.[6684]

4.5-6 ARP Format

The ARP format should:

- Highlight the ARP identifier on each page of the procedure,
- Highlight important items,
- Locate information categories in the same position on each page,
- Consistently present information throughout the ARP, and
- Minimize the need for paging back and forth to obtain the information.[6105]

4.6-1 Display and Line of Sight
Visible alarm indications should be located within about 60 degrees on either side of the direct line of sight of the user's normal work position.[6105]

4.6-2 Location of Alarm System Displays and Controls
Alarm displays and controls should be located so that the display can be read while operating the controls.[6105]

4.6-3 Location of First-Out Alarms
First-out displays should be located at the main workstation for the system and/or at a plant overview display visible to the crew.[0700]

4.6-4 Consistent Ordering
The ordering (e.g., left-to-right positioning) of displayed alarm groups should be consistent with the ordering of displays and controls of related plant systems and components.[6105]

4.6-5 Location for Prompt Response
Alarm displays and controls should be arranged and located such that those in the control room who must respond to an alarm can access the alarm information in sufficient time to respond adequately.[6105]

4.6-6 Location for Access to Process Controls and Displays
Visual alarm panels should be located near the controls and displays which are required for corrective or diagnostic action in response to the alarm.
Additional Information: If displays and controls associated with an alarm are on different panel segments, ensure that the alarm displays are located near the process display segment. If they are presented on a VDU, easy access to supporting controls and displays should be provided in the display.[6105, 6684, 0700]

4.6-7 Interference from Nearby Lights
Indicator lights or other non-alarm illuminated displays should not be located so close to alarm displays that they could be mistaken for an alarm or mask an alarm.[6105]

4.7-1 Consistency with the Main HSI

The alarm system HSI should be consistent with the standards and conventions used for the HSIs for other displays and controls in the control room.

Additional Information: The alarm system should use the same conventions such as symbols, icons, acronyms, coding, and measurement units that are used in the main HSI displays and procedures. While some minor differences may exist, the alarm system should never use a display feature, such as coding, in a way that is different from or conflicts with other HSIs. For example, if color is used to code priority, it should have the same meaning in the alarm system as in the process displays.[6105]

4.7-2 Consistency with Emergency Operating Procedures

The alarm system HSI should be consistent with the standards, conventions, and terminology used in the plant emergency operating procedures.

Additional Information: The alarm system should use the same conventions, such as terminology for plant systems and equipment, identification codes for plant components and parameters, and measurement units, that are used in the main HSI displays and procedures. Defined values, such as alarm setpoints, should be consistent. In addition, if the procedures use coding to present information, such as in graphical displays of a computer-based procedure system, then the alarm system should use the same conventions, such as symbols, icons and coding. For example, if color is used to code priority, it should have the same meaning in the alarm system as in the displays of a computer-based emergency operating procedure.[6684]

4.7-3 Conformance to HSI Design Review Guidelines

Alarm system elements (e.g., displays and controls) should conform to general HSI guidelines as well as alarm system guidelines.

Additional Information: While the alarm system guidelines take precedence over other more general HFE guidelines, it should be kept in mind that the alarm system is a part of the overall HSI. As such, it should conform to the same guidelines for general display and control design. For example, if the alarm system uses a touch screen interface for operator input and query of the system, the review guidelines for touchscreens (Section 3.2.4, Touch Screens, Light Pens, and Graphic Tablets) should be used to evaluate that aspect of the interface. As another example, if the alarm displays are integrated into P&ID VDU displays, the P&ID aspect to the display, such as icons and symbols, should be evaluated using Sections 1.2.8, Mimics and Diagrams, and 1.3.4, Icons and Symbols. In the event of overlap or conflict in guidelines, the guidelines for alarm systems take precedence when reviewing the alarm system.[6105]

SECTION 5: SAFETY FUNCTION AND PARAMETER MONITORING SYSTEM

5 SAFETY FUNCTION AND PARAMETER MONITORING SYSTEM

The primary function of these monitoring systems, which operate during all plant conditions, is to present information to aid control room personnel during abnormal and emergency conditions in determining the safety status of the plant and in assessing whether conditions warrant corrective actions by operators to avoid a degraded core. This function is particularly important during anticipated transients and in the initial phase of an accident.

INFORMATION DISPLAY

The devices used to display this information may include conventional and computer-based devices, as described in Section 1.6, Display Devices. Conventional display devices include meters, light indicators, numeric readout displays, plotters, and plotters. Computer-based display devices include CRTs, flat panel devices, and large-screen devices.

These devices may have single or multiple display functions. A single-function device presents information in a fixed format. Examples include an indicator that presents a single variable and a visual display unit that presents a single page containing a set of variables. A multiple-function device contains a set of display pages through which the user navigates to access desired information.

The organization of this information (e.g., grouping) of related data is important for supporting prompt recognition and comprehension of plant status. Related information may be organized by the physical arrangement of single- and multiple-function display devices. For example, individual devices may be grouped together so that related variables are presented in the same portion of a console or panel. Within a multiple-function device, the information is also organized by its placement within a display page and by the arrangement of display pages.

The information presented by these monitoring systems includes parameters and indications of functions important to plant safety. Important presentation characteristics include the conciseness of the display format, the arrangement of information according to plant modes, the range of conditions displayed, the display system's response to transient and accident conditions, the data sampling rate, the display's accuracy, the continuous presentation of information, the visibility of displayed data, limit marks for variables, and the indication of magnitudes and trends for variables. Guidelines for the review of these display characteristics are included in Section 5.1. General guidelines for the review of display devices, formats, and elements, and data quality are provided in Section 1.

USER-SYSTEM INTERACTION

User-system interaction refers to the types of operations that must be performed when users interact with a system. For safety parameter and function monitoring systems, this interaction may take many forms. System characteristics that affect user-system interaction include: user input formats; cursors; system response; features for managing displays; features for managing information; features for the prevention, detection, and correction of errors; and system security features. HFE review guidelines for these general topics are provided in Section 2. Because safety parameter and function monitoring systems are used to support operators during abnormal and emergency conditions, it is important that user-system interaction tasks are within the skill and workload capabilities of the users under these conditions. Guidelines addressing these considerations are provided in Section 5.2.

RELIABILITY, TEST, MAINTENANCE, AND FAILURE INDICATION FEATURES

This topic refers to features necessary for ensuring the continued operation of the safety parameter and function monitoring system. Reliability addresses the resistance of the system to failures. It affects the degree of trust that operators have regarding the displayed information and whether the system will

continue to operate correctly when needed. Failure indications addresses the ways in which the user is informed of the presence of potential failures or malfunctions in the system. These indications aid the user in identifying and diagnosing failures. Data validation techniques are used in plant I&C systems to assess the validity of plant data by comparing the data from different sources. Data that pass the test are said to be valid (i.e., of reliable quality), while data that fail are determined to be invalid (i.e., not reliable and possibly indicative of a system malfunction). Data that cannot be tested, such as when processors or redundant data are not available, are said to be unvalidated (i.e., of unknown quality). Analytical redundancy refers to one method for testing the validity of data. It is the intercomparison of measured variables, through the use of mathematical models based upon known physical relationships among variables. Another method of data validation is the direct comparison of values from redundant sensors. Guidelines for reliability, test, maintenance, and failure indication features are given in Section 5.3.

INTEGRATION WITH OTHER HSI ELEMENTS

This characteristic addresses the consistency and compatibility of the safety parameter and function monitoring system with the rest of the HSI. Because these systems are used in coordination with other display and control devices of the HSI to verify plant safety and support operators in determining corrective actions, the consistency and compatibility of conventions used for presenting and coding information and means of user-system interaction are important review considerations. Sections 1, 2, and 3 provide an extensive set of design review guidelines for information display, user-system interaction, and process control and input devices, respectively. In addition, the physical integration of the safety parameter and function monitoring systems with the rest of the HSI is an important review consideration to ensure that the system can be readily accessed and does not interfere with the use of other portions of the HSI. Guidelines for the physical integration of the monitoring system with the rest of the HSI are provided in Section 5.4.

5 SAFETY FUNCTION AND PARAMETER MONITORING SYSTEM

5.1 Information Display

5.1-1 Convenient and Ready Access to Data

Plant parameters and variables important to safety should be displayed in a way that is convenient and readily accessible.

Additional Information: The displays should be accessible to the following personnel, although not necessarily at the same time: shift supervisor, senior reactor operator, reactor operator, and shift technical advisor.[0800]

5.1-2 Critical Safety Function Display Visibility

Critical safety function displays should be readable from the workstations of users needing access to these displays.

Additional Information: User categories include shift supervisor, reactor operator, and shift technical advisor.[0800]

5.1-3 Critical Variables and Parameters

Critical plant variables and parameters should be displayed to help users evaluate the plant's safety status.

Additional Information: The set of critical plant variables is plant-specific and should be determined by the licensee/applicant. However, the display system, at a minimum, should provide information to plant operators about the following critical safety functions: reactivity control; reactor core cooling and heat removal from the primary system; reactor coolant system integrity; radioactivity control; and containment conditions.[0800]

5.1-4 Severe Accident Symptoms

The display system should display information about severe accident symptoms associated with the plant safety parameters and functions.[0800]

5.1-5 Concise Display of Information

Critical plant variables should be displayed in a concise format.

Additional Information: The display format should support users in comparing data from across related plant functions and assessing the safety status of the plant. A concise format might be achieved by presenting a group of critical variables on a single display or by arranging a set of displays (e.g., separate indicators) in a single location.[0800]

5.1-6 Display Response to Transient and Accident Sequences

The display's respond to transient and accident sequences should keep the user informed of the current plant status.[0800]

5.1-7 Rapid and Reliable Recognition of Safety Status Change

Critical safety function displays should allow users to comprehend a change in safety status in a matter of seconds.

Additional Information: These displays should incorporate accepted HFE principles to ensure user performance. For example, display formats containing patterns or visual coding that depict relationships between variables may support rapid comprehension. Patterns may be used that noticeably distort when an unsafe conditions is approached.[0800]

5.1-8 Data Sampling Rate

The sampling rate for each critical plant variable should be consistent with the users' needs for performing tasks.

Additional Information: There should be no meaningful loss of information in the presented data. The time delay from when the sensor signal is sampled to when it is displayed should be consistent with other displays of the HSI.[0800]

5.1-9 Display Accuracy
Each critical variable should be displayed with sufficient accuracy for the user to discriminate between normal conditions and those affecting plant safety status.[0800]

5.1-10 Magnitudes and Trends of Critical Variables
The display should provide magnitudes and trends for critical plant variables or derived variables.
Additional Information: Trends should be displayed with sufficient resolution in time and magnitude to ensure that rapidly changing variables can be observed and accurately interpreted. The time history should cover enough time and be accurate enough to depict the onset and development of conditions that vary from preceding normal operating conditions.[0800]

5.1-11 Continuous Display
Displays for monitoring safety parameters and functions should continuously display this information.
Additional Information: The display system maybe considered continuous even though all critical variables cannot be seen at one time. An example is a hierarchical network of displays from which the user can access specific displays for assessing the safety status of the plant.[0800]

5.1-12 Separate Display Pages for Plant Modes
Where plant operating modes impose different demands, separate display pages should be provided for each mode.
Additional Information: Some typical modes of plant operation are power operation, startup, hot standby, and hot shutdown. For each mode, the displays should contain at least the minimum set of data needed to assess the safety status of the plant. One means for accommodating the plant modes is to have a top-level display that is independent of plant mode and a set of mode-dependent subordinate display pages.[0800]

5.2-1 Critical Parameter Monitoring Support

The system should assist the user in monitoring critical parameters, especially parameters that change very rapidly or very slowly, by alerting the user when values are out of range.
Additional Information: The user may not be able to maintain attention on the slow-changing indication due to competing task demands and, thus, may not be aware that the parameter is out of range. For rapidly changing parameters, the unacceptable range might be reached before the user is able to begin monitoring the parameter. Setpoints used to indicate a change in status should be chosen to provide users with sufficient time to respond appropriately.[5908]

5.2-2 Alerts for Abnormal Conditions

Where feasible, the system should provide perceptual (audible or visual) cues to alert personnel to abnormal operation conditions that potentially warrant corrective action.[0800]

5.2-3 Alert to Higher Level Displays

While viewing secondary (lower-level) displays, a perceptual (audible or visual) cue should be provided by the safety parameter or function monitoring system to alert the user to return to the primary (higher-level) display format if significant information in that display requires user attention.[0800]

5.2-4 Ease of Interaction

User interactions with the display system should be within the skill capability of the control room crew and should not significantly increase personnel workload.
Additional Information: No additional operating staff beyond the normal control room operating crew, should be needed to operate the display during normal and abnormal plant operation. Interactions with the display system should not impose workload demands that detract from other tasks performed by control room personnel during normal and abnormal plant operations.[0800]

5.3-1 Display Reliability

The display should not give false indications of plant status.
Additional Information: Both the processing of display information and the display device should be highly reliable. The operating and failed states should be indicated to users as described in Guideline 1.1-23.[0800]

5.3-2 Data Reliability/Validation for Critical Plant Variables

Critical plant variables should be reliable and should be validated in real time.
Additional Information: There are several methods of ensuring that critical variables are reliably presented to the operators. These methods should be used as appropriate to achieve a high data quality and veracity. Lack of data validation places the burden of identifying valid readings on the operator. One method of achieving this, would be to have an estimate of data quality and a data quality indicator associated with each critical variable, including derived synthetic variables. Other recommended methods include: range checks for failed instruments; comparison of redundant sensors; and analytical redundancy. Range checks for failed instruments can ensure that failed instruments are identified and that they are not averaged with other, valid readings, possibly masking the failed instrument. Comparing and possible averaging redundant instruments can improve the quality and reliability of data. Analytical redundancy refers to the intercomparison of measured variables, through the use of mathematical models based upon known physical relationships among variables to determine whether there are inconsistencies in the values of the measured variables. For example, 'reactor power,' 'reactor coolant temperature rise through the reactor core,' and 'reactor coolant flow rate' are interrelated variables based upon the physical principles of heat transfer. A measured value for coolant flow should be consistent with the analytically calculated value for coolant flow derived mathematically from the corresponding measured values of reactor power and coolant temperature rise.[0800]

5.3-3 Display of Data Reliability/Validation for Critical Plant Variables

The status of the data should be displayed to the operator with an appropriate data quality indicator (e.g., valid, invalid, or unvalidated; or a derived numerical estimate).
Additional Information: Operators should also have available (e.g., on a separate display page) the individual sensor readings, so they can pinpoint an indicated problem, if the validation fails.[0800]

5.4-1 Interference with Crew Movement

The location of displays for monitoring safety parameters and functions should not interfere with the normal movement of the control room crew.

Additional Information: The display device may be located on the main control board. The displays should be accessible to the following personnel, although not necessarily at the same time: shift supervisor, senior reactor operator, reactor operator, and shift technical advisor.[0800]

5.4-2 Visual Interference with Other Controls and Displays

The display system should not interfere with visual access to other control room operating systems or with displays that are important to safe operation of the plant.[0800]

5.4-3 Labeling

Display devices for monitoring safety parameters and functions should be labeled and readily distinguished from other devices.[0800]

SECTION 6: GROUP-VIEW DISPLAY SYSTEM

6 GROUP-VIEW DISPLAY SYSTEM

Group-view display systems allow multiple personnel to simultaneously view the same information when they are in the CR or distributed throughout the plant. The most important characteristic of a group-view display is supporting team performance and not the type of device used to implement the display.

Group-view displays have traditionally been implemented in conventional control rooms using large-screen displays that enable multiple individuals to refer to the same information and allow individuals to move about the CR while still viewing the information. They can also reduce distractions that might otherwise occur if the information is needed by multiple personnel is located at the workstation of one individual. Configurations other than large-screen display devices are also used such as small-screen display devices that are conveniently located for access by multiple individuals (i.e., walkup display devices).

Conventional CRs have specific characteristics that have evolved over many years of design that contribute to crew performance. They typically feature hardwired controls and displays (and perhaps a lesser number of computer-based controls and displays) that are installed on large control panels that are shared by the crew members. Because they have fixed locations on control panels, access typically does not require unusual display-space navigation skills. Personnel who wish to use the same control or display tend to be aware of each other's intent and actions because they must share the physical devices. In addition, supervisors and other operators can often understand much about an individual's activities (e.g., which procedure step is being performed) by observing the operator's position at the control panels, which contain spatially fixed controls and displays.

Some of these positive characteristics of conventional CRs may be lost in CRs with computer-based workstations, resulting in the following types of problems:

- Difficulty maintaining awareness of overall plant status – Narrowing of attention to local problems at the expense of overall awareness has long been a problem in NPPs. This problem may be aggravated in computer-based CRs by the fact that only a portion of the total plant information is visible at one time through the limited viewing area of an information display screen.
- Difficulty and time delay associated with accessing computer-based controls and displays – Problems may result because controls and displays must be retrieved through navigation of the computer display space.
- Difficulty maintaining awareness of crew member actions – Operator actions performed in a computer-based workstation may be less identifiable when compared with actions performed at a conventional control panel. In addition, because a single control could have multiple locations in the computer display space, it may be possible for multiple operators to perform tasks involving the same control without being fully aware of each other's specific control actions and intentions.
- Difficulty communicating – Expressing ideas through face-to-face interactions using gestures or verbal communication is important to crew performance. This may be difficult in a computer-based CR because of physical separation/isolation. This problem may be further aggravated by the fact that operators have individual views of the display system and may not be viewing the same portion (e.g., display page) of the display system when they attempt to collaborate.

GROUP-VIEW DISPLAY FUNCTIONS

The overall purpose of a group-view display system can vary from design to design. The specific purpose of the system provides a basis for identifying and assessing the relevance and appropriateness of the functional capabilities and design features of a group-view display system. Some considerations to be addressed include the intended users of the system, the physical locations to be covered, the conditions

under which the system is to be used (e.g., normal operations versus emergencies), and types of support the group-view display system is to provide to personnel.

The functionality of group-view displays can include:

- Providing an overview or high-level summary of the plant status (see Section 6.1.2)
- Directing operators to additional information from other portions of the HSI by providing automatic retrieval of required information or cues to the operator to assist manual retrieval (see Section 6.1.3)
- Supporting crew coordination and awareness of each other's activities (see Section 6.1.4)
- Supporting personnel communication and collaboration for tasks such as diagnosing the cause of a process failure or performing a multi-person control task that may require discussions between personnel to coordinate information, diagnose problems, and plan corrective actions. To accomplish this a group-view display should provide information that other operators can see, discuss, and use. Verbal communication and gestures, such as pointing, are important means for communicating ideas. When operators are physically present at the same display device, communication may take the form of natural talking and gesturing. However, when operators cannot be physically present at the same display device this type of communication may take the form of computer-based interaction.(see Section 6.1.5)

USER-SYSTEM INTERACTION

The specific characteristics of group-view displays that support user interaction may be considered in two categories: (1) support for an individual's interaction with a group-view display device and (2) support for shared use of the group-view display device among multiple individuals. Each is described below.

Features that support individual interaction allow a user to access, and possibly manipulate, information presented on the group-view display. An important consideration is whether the group-view display is a stand-alone system or coordinated with the controls and displays. The following are some examples:

- Coordinated displays – The user can select options from the group-view display and the chosen items appear on a display in the user's work area.
- Coordinated controls – The user can operate both the group-view display and a display in the user's work area via the same control device such as the same keyboard or mouse.

Features for shared use allow multiple users to interact with the display. Features that manage users' access to the group-view display system are important for minimizing conflict. For example, if an individual changes the information content of the display to suit personal needs, the needs of the other crew members may not be met.

Some interaction considerations that are important to an HFE design review include the following:

- User access – Sequential user access allows one user to interact with the system at a time. This may require some sort of gate-keeping function to help users "take turns." Concurrent access allows multiple individuals to use the system at the same time.
- Control capabilities – The type of user access will affect the types of user interfaces and controls used for interacting with the system. For example, if the system is operated via cursor and has sequential user access then the cursor must be shared by the users. If the system supports concurrent use, then multiple cursors may be present on the group-view display at the same time.
- Display capabilities – Display capabilities may also be affected by the type of access. For example, if the system has a windowing capability then individual windows might be operated by different users.

6 GROUP-VIEW DISPLAY SYSTEM

Guidelines for the review of user-system interaction characteristics of group-view displays are found in Section 6.2. General guidelines for user-system interaction are found in Section 2.

INFORMATION DISPLAY

Three alternative display device configurations applicable to the implementation of group-view displays in CRs include:

- Large-screen display devices that are usually centrally located and viewable from many areas in the CR.
- Individual, redundant display devices located throughout the CR in areas where operators often work.
- Walkup display devices, within the area defined as "at the controls" by the plant's safety analysis report and technical specifications, that are not located in an operator's immediate work area.

Guidelines for the applicability of display devices are contained in Section 6.3. General guidelines for information display are presented in Section 1.

CONTROLS

The types of devices used to interact with the group-view display system should be identified, including computer-based input devices, conventional controls, and soft controls. General guidelines for computer-based input devices and conventional controls are in Section 3. Guidelines for soft controls are in Section 7.

BACKUP CAPABILITIES

If the failure or loss of availability of the group-view display system may affect operator tasks that are important to plant safety, then backup systems and capabilities should be addressed.

INTEGRATION WITH OTHER HSI ELEMENTS

The consistency and compatibility of the group-view display system with the rest of the HSI can affect operator performance and, therefore, should be addressed in the characterization. For example, the content (e.g., plant variables) and form (e.g., display formats, coding schemes) of information presented on the group-view display should be consistent with the other displays used by personnel in the CR. In addition, the user-system interaction methods used for the group-view display system should be consistent with methods used for other HSI resources.

6 GROUP-VIEW DISPLAY SYSTEM

6.1 Functional Characteristics

6.1.1 General

6.1.1-1 Applicability

Group-view displays should be used when crew performance may be enhanced by access to a common view of plant information or a means of sharing information between personnel.

Additional Information: A group-view display is one approach to presenting information and may be used to address any of the following problems:

- Difficulty maintaining awareness of overall plant status,
- Difficulty and time delay associated with accessing computer-based controls and displays,
- Difficulty maintaining awareness of crew member actions,
- Difficulty communicating.

The acceptability of a group-view display depends upon its purpose and the degree to which this purpose is accomplished. A group-view display may be considered unacceptable if it does not satisfy a recognized need or its presence detracts from personnel performance.[2090]

6.1.1-2 Group-View Display Information

Information presented in a group-view display should be relevant to the task requirements of multiple personnel and presented in a manner that is evident to its intended users.

Additional Information: Personnel should have available in their immediate work areas the information needed to perform their tasks. A group-view display located outside of the immediate work area, such as a large-screen display or a walk-up display device, should not be the sole location for information pertaining to plant conditions. Although the arrangement of information on the group-view display may be unique, the data values and status indications presented on the group-view display should also be available from the displays in the operators' work areas.[2090]

6.1.1-3 Consistency With Other Portions of the HSI

The design of group-view displays, including information presentation and interaction characteristics, should be consistent with the rest of the HSI.

Additional Information: Because group-view displays are to be used in conjunction with the rest of the HSI, consistency is necessary to support personnel in finding and using information. Guideline 1.1-17 states that consistent meanings should be assigned to codes, from one display to another. Generic HFE guidance should be tailored to specific HSIs and used to facilitate the standard and consistent application of HFE principles across the detailed design of the HSI. Since the group-view display is one part of the overall HSI, it should adhere to the same guidelines and standards of rest of the HSI, regarding such characteristics as modes of interaction, dialogue style, terminology, abbreviations, and symbols and other coding schemes. Differences should be based upon unique personnel task requirements that the group-view display is intended to support. However, obvious inconsistencies between the group-view display and the rest of the HSI, which may lead to confusion on the part of personnel, should be avoided. Examples of such inconsistencies may include presenting the same plant parameters with different units of measure or using unique coding schemes on one display device that may be confused with coding schemes used for other devices.[2090]

6.1.1-4 Control of Group-View Display

Individuals should not be permitted to make changes to the group-view display in a way that would reduce its usefulness to others.

Additional Information: Control of changes in a group-view display, such as changing variables or their ranges, may lead to misinterpretation or confusion. The use of administrative procedures is one way to control changes that may be confusing or otherwise detract from personnel performance.[2090]

6 GROUP-VIEW DISPLAY SYSTEM
6.1 Functional Characteristics
6.1.1 General

6.1.1-5 Retrieving Information via the Group-View Display
If individuals use the group-view display system to access additional information for their own use, this information should be presented on a separate display (e.g., an individual-view display).[2090]

6 GROUP-VIEW DISPLAY SYSTEM
6.1 Functional Characteristics
6.1.2 Overview Display

6.1.2-1 Providing an Overview Display
The group-view display should provide an overview display if user performance may be supported by a display that combines and integrates diverse plant data in a way that informs personnel of important conditions and allows them to see the overall status of the plant or process.
Additional Information: Operator performance may be enhanced by an overview display if:

- The demands on personnel for gathering and integrating plant data at certain times are high due to time demands from plant dynamics and competing operator tasks,
- Data needed by personnel for assessing plant conditions are dispersed within the physical space of the panels and consoles of the control room or the virtual space of the display system,
- The process for comparing and integrating data is inherently time consuming and error prone (e.g., incorrect comparisons, omissions),
- Personnel performance would benefit from rapid access to status information.

The appropriateness of overview displays should be considered within the context of the entire HSI design. The overview display is one approach to providing personnel with rapid access to important plant information. Other approaches may also be appropriate such as individual, spatially dedicated display devices. A overview display should not be provided if personnel have adequate access to required information without it and the presence of the overview display would distract personnel or interfere with their tasks.[2090]

6.1.2-2 Indicating Plant Status
The overview display should support the personnel in obtaining an overall view of plant status, gaining awareness of major changes in plant status, and identifying minor changes in plant state that are important to the plant condition.
Additional Information: The overview display should support the personnel in understanding of the immediate health of the plant during ongoing operations and response to plant upsets. It should also serve to orient people entering the control room, including during shift turnover. The overview display should indicate major changes in plant condition, such as the presence of alarm conditions. It should identify conditions that are changing, their rate of change, their significance to plant safety, and their implications for the future state of the plant. In addition, the overview display should support personnel in identifying minor changes in plant condition (e.g., changes that have not gone beyond an alarm setpoint) that are important to maintaining a general awareness of plant condition. These indications should keep personnel informed of (1) the normal operation of ongoing plant processes (e.g., closure of a valve may indicate the completion of some stage of an automatic fluid transfer process) and (2) the early stages of potential problems (e.g., parameters that are approaching alarm conditions).[2090]

6.1.2-3 Flexibility In Searching Information
The overview display should provide flexibility in the types of information searches that personnel may employ to assess plant status.
Additional Information: The overview display should support the operator in making rapid overall assessments of plant condition using various types of searches, including:

- Data driven – Searching for information that describes conditions to which personnel were specifically alerted (e.g., via alarms),
- Knowledge driven – Searching for information for which operators are specifically looking (e.g., testing hypotheses about plant status),
- Incidental – Identifying of information indicative of plant conditions for which the operator was not specifically looking (e.g., discovering potential problems while traversing the various displays in the course of other information searches or activities).[2090]

6.1.2-4 Support for Rapid Shift of View

The overview display should support personnel in rapidly shifting their focus of attention when tracking an evolving event.

Additional Information: While personnel have a tendency to focus on the details of a particular problem, the overview display should direct attention to new conditions. It should support personnel in alternating their focus of attention between the details of the event and the status of the entire plant in a manner that does not disrupt ongoing lines of reasoning.[2090]

6.1.2-5 Overall Assessment at a Glance

The manner in which information is presented in the overview display should provide a characterization of the situation as a whole in a concise form that can be recognized at a glance.

Additional Information: Rapid assessment of plant conditions requires personnel to quickly extract status information from the display. Rapid assessment is determined by both the amount of information and the manner in which it is presented. That is, presentation techniques may be used to reduce demands on the user's attention while maintaining the quantity of information contained in the display. The following design techniques are particularly relevant to the design of overview displays for supporting rapid overall assessment of plant condition:

(1) Coding schemes should be used to make important information the most perceptually salient.

(2) Related concepts should be spatially grouped and information should be imbedded within graphical objects to reduce the need for shifts in attention caused by excessive eye movement. For example, organize data by plant safety function; incorporate bar charts and digital values within symbols for major plant components.

(3) The number of objects presented should be minimized to reduce demands on short term memory.

(4) Cues that support rapid access to long-term memory stores, such as well defined object categorization schemes and pattern-matching cues, should be used to reduce demands on attention.

(5) Information processing such as filtering, suppression, and prioritization, based on considerations such as plant state and operator task requirements, should be used where the quantity of incoming information may impose excessive demands on operators.

(6) Display formats that make use of peripheral vision capabilities should only be used to facilitate non-attentive monitoring of qualitative changes of less important information and should only be implemented where they do not detract from primary task performance.[2090]

6.1.2-6 Level of Abstraction

The information presented on the overview display should be abstracted to a level that is consistent with users' information requirements for assessing plant status.

Additional Information: The overview display is intended to support personnel in monitoring and assessing changes in plant state. Information should be selected to be consistent with the types of decisions operators must make when monitoring the plant, such as determination of challenges to plant safety, the availability of plant safety systems, and the operational status of specific systems and components.[2090]

6.1.2-7 Relevant to the Viewer's Context

The overview display should present information that is relevant to activities that are ongoing and which help users determine whether events are proceeding according to expectations.[2090]

6.1.2-8 Mimic Format

The overview display should include a plant mimic when a mimic may enhance personnel performance by (1) communicating functional relationships between components or (2) providing a means of organizing information that aids information retrieval and plant monitoring.

Additional Information: Mimics are a prominent feature of overview displays for advanced control rooms. However, a mimic that is intended to provide a high-level indication of plant status may not be very informative to experienced operators because operators are very familiar with the functional relationships of the depicted systems and components. It may however, provide a useful framework for organizing plant information to support the operators in locating specific information and monitoring particular portions of the plant. A mimic format may also be valuable if it is used to depict functional relationships of lower-level components and parameters for which the operators are less familiar.[2090]

6.1.2-9 Display of Safety Parameters and Functions

If plant safety parameters and functions are presented via a combination of the overview display and other display devices, then these display devices should be within easy view of each other.

Additional Information: Plant safety parameters and functions should be displayed in accordance with the guidelines in Section 5, Safety Function and Parameter Monitoring System.[2090]

6 GROUP-VIEW DISPLAY SYSTEM
6.1 Functional Characteristics
6.1.3 Access to Additional Information

6.1.3-1 Support for Identifying Relevant Information
Where personnel performance may be enhanced by assistance in retrieving information, the group-view display should direct the user to relevant detailed information.
Additional Information: Relevant detailed information may reside in other portions of the HSI such as lower-level display screens, other display devices, and procedures to support their specific information needs. While the group-view display presents information that is of interest to the crew, it should also assist individual operators in obtaining detailed information that is relevant to their particular needs. The group-view display should provide this function if:

- The quantity of potential supporting information is high, or
- The supporting information is distributed among multiple topics/categories, or
- The supporting information is distributed among multiple information sources (e.g., display devices, procedures).[2090]

6.1.3-2 Automatic Retrieval and Presentation of Information
If information is automatically retrieved, it should be presented in a way that conveys where it came from and why it was retrieved.
Additional Information: This may be achieved using approaches such as animation in which changes in position and size of visually represented objects or concepts are used to indicate relationships.[2090]

6.1.3-3 Manual Retrieval of Information
Support provided for manual retrieval of additional information should convey the location of both the user and the additional information in relationship to the total display space and the available pathways and mechanisms for accessing this information.
Additional Information: The following are design approaches that use perceptual context to convey relationships between the locations of data in the display space and help the user develop an understanding of the organization of the data:

- Long shot view – Provide an overview (long shot view) of the structure of the display space noting current and desired locations.
- Perceptual landmarks – Provide easily discernable features that appear in successive displays that provide a frame of reference for establishing relationships.
- Display overlap – Divide a single display that is too large to be displayed at one time on a single display device into sections with some portions repeated (overlapping) between successive views.
- Spatial representation – Assign spatial attributes to data to aid human information processing(e.g., displaying data via taxonomic trees, organizing computer files using a desktop metaphor).
- System representation – Arrange the data in a manner that provides information about the structure of the process or system to which the data relates. (Woods refers to this category as spatial cognition.)[2090]

6 GROUP-VIEW DISPLAY SYSTEM
6.1 Functional Characteristics
6.1.4 Support for Crew Coordination

6.1.4-1 Support for Crew Coordination
The group-view display may be used to support crew coordination when crew performance would benefit from better awareness and coordination of actions.
Additional Information: This group-view display function consists of assisting the operators in maintaining awareness of the intentions and actions of the other operators so that separate activities can be coordinated and operators can monitor each other's activities to correct errors or promptly lend support when needed. This assistance may take many forms including providing information about operators' locations in the display system, locations in ongoing procedures, and actions performed using computer-based controls. This function is especially important in work settings where:

- Personnel need to coordinate their activities with those of others,
- The workstation design tends to isolate operators, and
- Casual observation and conversation is not adequate for maintaining awareness of others' activities.[2090]

6.1.4-2 Openness of Tools
Where enhanced coordination is desired between personnel, the group-view display should feature open tools for interacting with the HSI or the plant.
Additional Information: The "openness" of a tool refers to the degree to which it enables other personnel to infer useful information about the nature of the task and the specific actions being taken by observing its use by the operator. User interfaces that incorporate representations of physical and functional characteristics of the problem domain can provide observers with a context for understanding the task. For example, a group-view display may be used to allow personnel to observe a control action such as the alignment of a piping system. In this case, a mimic display, in which operators manipulate graphical objects, may provide more useful information to an observer than if the same task were performed via text commands on a keyboard. This is because the display conveys to the observer physical characteristics of the task, such as the type of valve being operated, and functional characteristics, such as the relationship of the valve to the overall piping system, which provides the observer with a better understanding of what action has been performed and its significance to the plant system.[2090]

6.1.4-3 Openness of Interaction
Where enhanced coordination is desired between personnel and communication is restricted by the design of the workstations, the group-view display may be used to facilitate open interactions.
Additional Information: Openness of interaction refers to the degree to which the interactions between team members allow others with relevant information to make contributions. The mode and style of interaction should allow others to see/hear the interaction and provide input (e.g., personnel working on other tasks are not excluded from providing helpful input). For example, if interactions are performed using computer-based communications or audio headsets, other crew members may not be able to observe the interaction and contribute. Where communication can be augmented visually, the group-view displays may be used to enhance the openness of interaction.[2090]

6.1.4-4 Horizon of Observation
Where enhanced coordination is desired between personnel, the group-view display should be used to allow each crew member to perceive a greater portion of the task environment.

6 GROUP-VIEW DISPLAY SYSTEM
6.1 Functional Characteristics
6.1.4 Support for Crew Coordination

Additional Information: Horizon of observation refers to the portion of the crew task that can be seen or heard by each individual. It is largely determined by the arrangement of the work environment (e.g., proximity of team members), the openness of interaction, and the openness of tools. By making portions of a job more observable, other team members are able to monitor for errors of intent and execution, and situations in which additional assistance may be helpful. The horizon of observation may be enhanced through the implementation of group-view displays that present information about the actions of crew members. For example, group-view displays may be used to indicate each crew member's location in the display system and the status in ongoing procedures. Group-view displays may also be used to allow personnel to monitor control actions performed by others for system anomalies or operator errors.[2090]

6.1.5-1 Supporting Communication and Coordination

Where crew performance may be enhanced by improved coordination, the group-view display may be used to support operators in actively participating in the same task through the sharing of information, ideas, and actions.

Additional Information: This function is achieved by providing the operators with a common frame of reference and tools for communication. It contrasts with the group-view function of support crew coordination, which supports personnel in coordinating separate activities. The group-view display should provide this function when:

- There is a high need for operators to work together on the same task/problem (e.g., complex diagnoses of plant failures),
- Face-to-face interaction/collaboration is difficult due to the arrangement of the work setting and the demands of concurrent tasks, and
- The quality of communication and collaboration would be enhanced by computer-based tools.
- Collaborative problem solving – Searching, retrieving, reviewing, and annotating plant information in a collaborative manner.
- Collaborative control tasks – Allowing multiple operators to perform control actions on the same plant system at the same time.
- Data recording/form filling – Entering and recording data that requires contributions from multiple operators.[2090]

6.1.5-2 General Requirements for Communication/Collaboration

If the group-view display is to be used to support communication/collaboration, it should provide a representation of the task/problem and the tools required for examining and explaining the task/problem.

Additional Information: The group-view display should provide the crew with a common understanding of the task/problem (i.e., the specific problem-solving, control, or data recording task of interest). It should provide means for crew members to express information and ideas and receive information and ideas from others regarding the task/problem.[2090]

6.1.5-3 Coordinating Input Between Participants

The group-view display should contain mechanisms to regulate the participants' access to the group-view display to allow information to be provided in an orderly manner.

Additional Information: Failure to provide regulating mechanisms may result in (1) conflict between users as they try to coordinate their presentations and (2) higher attention and processing demands for viewers as they attempt to identify contributors and process information from multiple presenters. In addition, mechanisms for regulating the participants' access should be compatible with social conventions of communication (e.g., preventing one person from monopolizing communication to the extent that it excludes all others) to allow effective use and maintain user acceptance. Any social mechanisms adopted by users for regulating the participants' access to the group-view display should support effective use of the system under a full range of plant conditions.[2090]

6.1.5-4 Minimizing Communication/Collaboration Interaction Burdens

The methods of interaction provided by a group-view display to support communication/collaboration should be designed to minimize the demands associated with executing these interactions.

Additional Information: Computer-based interfaces may impose burdens that are different from face-to-face discussions for multi-person interactions, such as providing inputs via keyboards or pointing interfaces. These burdens should not interfere with the ability of operators to interact with each other and should not detract from the operators' primary tasks associated with controlling the plant. Overall, the burdens associated with communicating and collaborating via the group-view display should be offset by the benefits gained from interactions via this media.[2090]

6.1.5-5 Compatibility With Social Conventions
The methods of interaction for communication/collaboration provided by a group-view display should be compatible with social conventions within the intended user group.
Additional Information: The design of communication/collaboration capabilities of a group-view display should be based on an understanding of social conventions within the intended user group. The communication/collaboration capabilities should be sensitive to the subtle and complex social dynamics that is inherent in group interaction. For example, by providing all individuals with equal access, the system may fail to address the special access requirements of some users (e.g., shift supervisor or TSC personnel). Also, the design of a groupware application may fail to support the use of subtle cues, such as facial and hand gestures, verbal signals, and non-verbal signals (e.g., pausing, clearing the throat), which people often use to moderate communication (e.g., indicate that they are about to start or stop talking). As another example, the system may provide capabilities for recording interactions between individuals, which may be considered unacceptable or undesirable by some users.[2090]

6.1.5-6 Flexibility in Communication/Collaboration Methods
The methods of interaction provided by the group-view displays to support communication/collaboration should be flexible enough to accommodate the range of personnel interactions that occur during normal and upset conditions.
Additional Information: The design basis for communication/collaboration capabilities of group-view displays should be based on analyses of actual interaction requirements for normal and upset conditions rather than on simplified or idealized of representations of these requirements (e.g., as depicted in operating procedures). Exception handling is critical for rapid, adaptable responses to abnormal and emergency conditions. For example, the roles of individuals in an operating crew may change from the typically roles of shift supervisor, reactor operator, and balance of plant operator, as personnel share responsibilities in response to specific plant conditions. A lack of flexibility in the group-view display for supporting this interaction may impair operator response or introduce additional workload, as operators try to find ways to work around the limitations of the system. This may detract from the operator's primary task of controlling the plant.[2090]

6.1.5-7 Identification of Participants
A coding scheme or designation system should be used to identify participants while they manipulate information on the group-view display.
Additional Information: The identification system should be developed such that it does not contribute additional clutter to the group-view display or impose excessive cognitive demands for interpretation. If participants have individual cursors, the design of these cursors should be distinctive (see Guideline 2.3.4-3).[2090]

6.1.5-8 Maintaining Historical Record of Contributions
The group-view display system should support the recording of information regarding the history of interactions if personnel tasks require this information.

Additional Information: Personnel may need information regarding the current version of an idea or the complete history, such as when an idea was introduced, who was the originator, who modified it, and when and how the idea was modified. This information should be made available.[2090]

6.1.5-9 Spatial Coordination of Inputs
When transferring information between an individual-view display and the group-view display, the information should be presented in a manner consistent with the sender's expectations.
Additional Information: When transferring information from one screen to another the user should either (1) have control over where the information will appear or (2) be informed of where it will appear (e.g., information always appears in a designated location). Transferred information should be presented in a manner that reduces the user's workload associated with finding the information and adapting to its orientation on the screen.[2090]

6.1.5-10 Timing Coordination of Inputs
When transferring information between an individual-view display and the group-view display, the information should be presented promptly and with minimal delay.
Additional Information: Response time deviations should not exceed more than one-half of the mean response time (see Guideline 2.4.3-9). When a sender transfers information to the group-view display, a lag can be an obstacle to the communication of ideas. This is especially true if other modes of communication, such as verbal, are available and lead or lag behind the group-view display. For example, comprehension may be impaired when verbal information precedes the associated visual information. In addition, problems related to participants taking turns may also result because participants are unaware that another visual presentation has started.[2090]

6.2-1 Separate Input Devices for Displays

When control of the large- and individual-view display devices is performed by separate input devices, their design should support coordinated use.

Additional Information: Problems that may result from poor coordination of multiple input devices include errors in using the wrong input device, awkward transitions between the input devices, and clutter at the operator's workstation resulting from the input devices (especially if a movable input device such as a mouse is used). The input devices should have compatible methods of operation as described in Guideline 2.3.4-4.[2090]

6.2-2 Mode Switch

When a mode switch is provided to transfer input control between the large- and individual-view display devices, protection should be provided to prevent input from being entered into the wrong display.[2090]

6.2-3 Cursor Motion

If a cursor motion is used to transfer input control between the large- and individual-view display devices, then the movement between the displays should be smooth and contiguous.

Additional Information: In this approach the desired display device is accessed by moving the cursor into the display space of a particular device. As the cursor crosses from one display device to another it should either (1) maintain continuous horizontal motion for side by side monitors, (2) maintain continuous vertical motion for stacked monitors or (3) should jump between uniquely designated locations on each screen, as described in Guideline 2.3.4-2. One should be able to follow the cursor with a simple movement of the head or eye. A combined motion such as raising and turning one's head should not be required.[2090]

6.2-4 Compensating for Different Screen Sizes and Shapes

If a cursor motion is used to transfer input control between the large- and individual-view display devices of different size and shape, then features should be incorporated to make their spatial relationships clear to the user.

Additional Information: Guideline 2.3.4-2 indicates that the cursor should jump between uniquely designated locations on each screen if the screens are not located adjacent to each other. This may be accomplished by designating a "home" or entry point on each screen. It may also be accomplished by having the smaller screen overlap with a designated portion of the larger screen (e.g., the top portion of the smaller screen may be indicated as corresponding to part of the lower section of the larger screen). Computational techniques for cursor motion, may also be used to correct for differences in the number of pixels (display elements) of the different screen sizes. For example, the upper left and right corners of the smaller display would correspond to the lower left and right corners of the larger display, respectively. When using this approach, a single movement of the cursor controller (e.g., mouse) would result in greater cursor movement on the larger screen than on the smaller screen.[2090]

6.2-5 Indicating Active Display

When using the group-view display, the user should receive a clear indication that the display is active.

Additional Information: Guideline 2.5.2-6 states that an active display window should be perceptually distinct from inactive windows. A common technique for conventional computer systems is to apply a visual code to the frame of the active window. However, for group-view displays, a multi-dimension coding mechanism is needed to indicate the status for each user because the display may be active for some operator but not for others. However, this type of coding mechanism may possibly be distracting and confusing. Thus, another approach may be to use the position of each user's cursor as a perceptually distinct cue to indicate that the group-view display is active for that user. This approach requires that the cursors be readily observable so the user can identify the display in which the cursor is present and perceptually distinct so the user can identify the cursor from those of other users. This approach may be supplemented by coding mechanisms at the user's individual-view display to indicate that the group-view display is active.[2090]

6.2-6 Processing Information to Match User Requirements

The information associated with selectable items of the group-view display item should be processed to match each user's task requirements when this processing would reduce distracting and unnecessary information and enhance operator performance.

Additional Information: One approach to supporting personnel in the retrieval of information is to have the group-view display indicate that important information is available regarding a particular topic. This may be indicated by displaying an item that individuals can select to cause the information to be presented on an individual-view display. However, the selectable item may be associated with a large amount of detailed information that may not be relevant to each individual crew member. The general principle of task compatibility states that the HSI should meet the needs and requirements of the users' tasks. Thus, the information associated with this item may be processed to better match the information to the particular user's current task requirements and eliminate information that may be unnecessary or distracting.

The processing of this information may be based on such factors as operator characteristics and plant status. These processing methods may be used separately or in combination. For example, no processing may be used for those selectable items that are associated with little supporting information, processing based on user characteristics may be used for those selectable items that are associated with large amounts of information of differing importance to individual operators, and processing based on plant status may be used when the plant enters certain configurations (e.g., after a plant trip). Another consideration is the manner in which information is made available to the operators. The alarm message processing techniques described in Section 4.1.2 and in NUREG/CR-6105, may also be applied to the retrieval of information associated via group-view displays. Finally, consideration should be given to the degree to which the operator may control or override the processing method and the availability of the information (e.g., should an operator be able to access all associated information, if desired). Use of this capability should not impose demands on the operator that detract from the operator's primary task of controlling the plant.[2090]

6.2-7 Shared Cursors

When multiple users must share a single cursor for interaction with the group-view display, features should be provided to manage access to the cursor and indicate current ownership.

Additional Information: A method of managing access to the shared cursor should be provided to prevent conflict between potential users. In addition, a distinct coding method, consistent with Guideline 2.3.1-1, should be used to indicate that the cursor is in use and to identify of the user. The use of a shared cursor may be acceptable for group-view displays that are not frequently accessed by users. Frequent use of the cursor by multiple users may impose unacceptable delays to users who require immediate information. If the group-view display is used for communication/collaboration, the requirement to take turns may impede the natural flow of information from the group, but it may also provide an implicit way of managing the input of information. Thus, the disruptions to the flow of information should be balanced against the need for information to be presented in an orderly fashion.[2090]

6.2-8 Multiple Individual Cursors

When multiple users operate individual cursors for interaction with the group-view display, a coding scheme should be provided so the users can readily identify their own cursors and identify the users of the other cursors.

Additional Information: A distinct coding method, consistent with Guideline 2.3.1-1, should be used. Individual cursors allow individuals to work independently and, thus, may be preferable to shared cursors for retrieving information from a group-view display. If the group-view display is used for communication/collaboration then additional coding schemes may be needed to indicate which cursors are active.[2090]

6.2-9 Shared Window

If the communication/collaboration function is performed by presenting information on a shared window of the group-view display, features should be incorporated to prevent new information from obscuring old information.

Additional Information: One approach to performing the communication/collaboration function is to allow users to create representations of ideas, problems, or tasks using an individual-view display and then present it to others using a window of the group-view display. A possible problem with this approach is the possible duplication of information as multiple users present slightly different versions of the same idea. This restricts the amount of information that can be added to the group-view display and adds potentially distracting clutter. A decluttering function is needed that prevents inputted windows from obscuring each other and eliminates older windows.

If the decluttering function is performed manually, it becomes a user-system interaction task that may compete with other operator tasks. If the decluttering function is performed automatically then the users may have to expend cognitive resources to locate their input when it is automatically positioned on the group-view display and adjust to changes if the decluttering function automatically removes or repositions information that is already on the group-view display. The automatic decluttering function should use techniques such as animation to help users maintain an awareness of how the content of the group-view display has changed.[2090]

6.3.1-1 Selection of Group-View Display Devices

The selection of display hardware for group-view displays should consider such factors as the user's need for immediate access to the group-view display, user's need to view the group-view display from multiple locations in the control room, ability of users to leave their usual work areas, and the type of interaction that occurs between users when viewing the displayed information.

Additional Information: The group-view display function may be implemented using a variety of display hardware. Three alternatives that are relevant to NPP control room applications are:

- Large-screen display – Large display devices that are usually centrally located and viewable from many parts of the control room.
- Individual, redundant displays – Display devices located throughout the control room in areas where operators often work.
- Walkup display – This is a smaller display device that is not located the operators' immediate work area. Operators must walk to it from their usual workstations. For example, in conventional control rooms some computer-based display devices are not located in each operator's immediate work area, but are located within a convenient walking distance. If this option is selected, the display device should be within the area defined as "at the controls" by the plant's safety analysis report and technical specifications.

Four factors that should influence the selection of the display device include:

- Need for access to the group-view display – Does the nature of the operators' tasks require them to have immediate access to the group-view display?
- Need to view the group-view display from multiple locations in the control room – Can operator performance be enhanced by viewing the group-view display information from multiple, fixed locations in the control room or while walking around the control room?
- Ability to leave usual work area to go to a walkup display – Does the nature of the operators' tasks confine them to specific locations in the control room when the group-view display may be needed?
- Type of crew interaction required – Does the use of information presented on the group-view display involve independent actions of operators, verbal communication between operators, or both verbal communication and gesturing.

Table 6.1 shows conditions under which each of the three display devices types are desirable based on these factors. A tradeoff exists between (1) the ability to use natural gesturing and (2) the other considerations such as immediate access, viewing from multiple control room locations, and ability to remain at one's usual work area. The walk-up display allows natural verbal communication with gesturing, but requires operators to gather around it. The large-screen display and redundant, small screen displays provide immediate access from each operator's work area, but the operators may be physically separated. Thus, operators may not be able to communicate using pointing and other gestures unless this capability is provided by computer-supported tools. Evaluating the acceptability of these alternatives involves consideration of the amount of time required to complete an interaction and the quality of the interaction. For example, individual interactions using computer-based tools may require more time compared to natural interactions but the computer-based interactions may be more informative and beneficial to crew performance because ideas can be expressed with more visual detail. Finally, when comparing the relative benefits of large-screen displays to redundant smaller displays, one should consider other factors such as (1) the adequacy of space for these devices and (2) the flexibility that the large-screen display provides for viewing the group-view display from multiple locations in the control room compared to the redundant smaller displays which have more restricted viewing areas.[2090]

Table 6.1 Appropriate use of group-view display devices

DISPLAY DEVICE	APPROPRIATE USE*
Large-screen displays and redundant, small-screen displays	Immediate access is required Operator must be able to view information from multiple locations in the CR Operator often cannot leave usual work area to go to a walkup display Crew interaction requirements (e.g., verbal, gesturing) are low, or computer-based communication is provided
Walk-up display	Immediate access is not required Operator does not need to view information from multiple locations in the CR Operator can leave work area to go to a walkup display

* Conditions when device is preferred.

6.3.2-1 Control of Critical Information Display

Control of large-screen group display systems should be such that critical information cannot be modified or deleted inadvertently or arbitrarily.

Additional Information: The capability to change the display should be limited to designated users who operate according to pre-established procedures, upon command of a person in charge, or both. When users must make changes that are of interest only to them, a separate, remote display (such as a console VDU) should be provided.[5908]

6.3.2-2 Maximum Viewing Distance

The determination of the maximum viewing distance on a large-screen display should be based on an analysis of the information requirements of individuals and their locations in the work area.

Additional Information: Users should be able to resolve all important display detail at the maximum viewing position; see Guideline 1.6.2-2. Application of this criterion should consider the types of information contained in the group-view display, the ways in which this information is used by individuals, and the locations of these individuals relative to the display. For example, supervisors may only need to read high-level indications from their workstations while operators may need to read more detailed information. Evaluations that use this criterion should consider the reading/viewing requirements of personnel who may be seated at the greatest distance from the large-screen display. Considerations include: (1) do the individuals need to resolve all details or merely be able to detect changes that require additional scrutiny, and (2) will some or all or the large-screen display information be available on separate displays located closer to these individuals.[2090]

6.3.2-3 Minimum Viewing Distance

The display should not be closer to any observer than half the display width or height, whichever is greater.[5908]

6.3.2-4 Off-Centerline Viewing Angle

The determination of the acceptability of off-centerline viewing should take into account both the spatial distortion of the image and the effect of the viewing angle upon screen characteristics such as brightness and color rendition.

Additional Information: Individual viewers in a fixed location should be no more than 10 degrees off the centerline. For multiple viewers, it indicates a preferred limit of 20 degrees and an acceptable limit of 30 degrees off the centerline. This guideline addresses spatial distortion of the displayed image due to the viewing angle. However, off-centerline viewing of large-screen display devices may also result in (1) loss of general brightness for high-gain screens, and (2) loss of color rendition in projection-type devices due to the angles of reflection of the separate projection elements. Loss of general brightness for high-gain screens is usually not a problem until off-centerline viewing exceeds 25 degrees for beaded screens and 30 degrees for high-gain metallic screens. These effects may further reduce perceived resolution by reducing the effectiveness of color codes and image contrast. Thus, the combined effects of off-centerline viewing upon image distortion and screen characteristics should be considered.[5908, 2090]

6.3.2-5 Viewing of Multiple Display Devices

When multiple, large display devices are used, the normal work areas of each user should be within the acceptable off-centerline viewing area of each large display that each user must view.

Additional Information: If the large display devices are adjacent to each other, they should be angled toward each other so the acceptable off-centerline viewing areas of the displays overlap. If the operators' tasks require them to work at multiple locations in the control room, the acceptable viewing area should be maximized by angling the display surfaces toward each other so that the acceptable off-centerline viewing areas of each display device coincide to the greatest extent possible.[2090]

6.3.2-6 Unobstructed View
Seating areas should be arranged to provide critical observers with unobstructed views of the display.
Additional Information: Large screen displays should be located relative to critical observers so that the view is not obscured by other people. There are two methods for achieving this: (1) laterally staggering (off-setting) personnel and consoles to maintain an unobstructed view and (2) elevating the line of sight of personnel (e.g., supervisors) who are located farther from the display so they may see over the heads of personnel located closer to the display. The line of sight may be elevated by using raised or inclined floors or by raising the height of the screen. [5908, 2090]

6.3.2-7 Externally Illuminated Displays
Externally illuminated displays should have adequate illumination.
Additional Information: Large displays that are primarily illuminated by external sources, such as static mimics, should satisfy the criteria in Section 12.1.2.3 for illumination, uniformity, task area illumination, shadowing, glare, reflectance, and color. The level of illumination should provide adequate contrast to allow users to resolve all important displayed details at the maximum viewing distance.[2090]

6.3.2-8 Projected Displays
The optical characteristics of projection systems should conform to the guidelines given in Section 1.6.2.[2090]

6.3.2-9 Text Size
The size of text for labels and detailed information should be based on analyses of the maximum viewing distances of personnel.
Additional Information: The height of letters and numerals should typically not subtend less than 15 minutes of visual angle as measured at the maximum viewing distance; see Guideline 1.6.2-3. However, the maximum viewing distance may be different for different types of information in the display. For example, labels and high-level status indications may require larger viewing distances (e.g., across the control room) while individual parameter values may require shorter viewing distances (e.g., must be legible from panels that contain the corresponding controls). Therefore, the determination of acceptable text size should consider the type of information and the context in which it will be used.[2090]

6.3.2-10 Use of Labels
The presence of labels should not cause excessive clutter or detract from detailed information.
Additional Information: Because labels may be large and may require large separations (Guideline 1.3.3-6), they tend to clutter large displays. The EPRI URD requirements for the MCR Integrating Display and Mimic state, "Labels which are to be read at a distance shall be minimized; however, when the display is viewed from close range, each display quantity should be specifically identified by a label readable at the short distance." The need for labels may be reduced if graphical means such as mimics and symbols are used to identify information.[2090]

6.3.2-11 Use of Information Displays Developed for Standard Video Display Units (VDUs)
Displays developed for standard VDUs should not be presented on large-screen display systems without first being evaluated for acceptability.

6 GROUP-VIEW DISPLAY SYSTEM
6.3 Group-View Display Devices
6.3.2 Large Display Devices

Additional Information: Large-screen display devices tend to have lower brightness and resolution than standard VDUs and are susceptible to glare from ambient light sources. This may result in reduced legibility and reduced effectiveness of color coding schemes. Text, graphics, and color codes should be reviewed and adjusted to suit the characteristics of the particular display device.[2090]

SECTION 7: SOFT CONTROL SYSTEM

7 SOFT CONTROL SYSTEM

The basic function of soft control systems is to provide operators with control interfaces that are mediated by software rather than by direct physical connections. Soft controls can be used to control plant equipment, such as a pump, or the HSI itself, such as display selection. The unique characteristics of soft control systems that make them different from conventional controls, e.g., hardware knobs and buttons, are described below.

Spatial dedication vs virtual location – A conventional control typically has a unique location in the CR and is used to control a specific aspect of the plant or HSI. By contrast, a soft control for the same function is typically not spatially dedicated and may exist in multiple locations, e.g., it may be accessed from more than one display device, and from multiple pages within a display device. Thus, soft controls often lack the degree of spatial dedication that is characteristic of conventional controls.

Serial versus parallel presentation – Conventional controls are presented in parallel; i.e., all controls exist in their spatially dedicated location at the same time. Operators visually scan the controls to determine their status. Computer-based HSI components usually contain more displays and controls than can be viewed at one time via its display devices. Because the total set of displays cannot be viewed at once, the user views portions of it one after another, similar to a person looking into a room through a keyhole in a door. This 'keyhole effect' limits the number of soft controls that can be viewed or used at one time, thus forcing serial rather than parallel access.

Present versus available – Conventional controls are spatially dedicated and as such are continuously present in the control room. Soft controls may either be designed to be continuously present like conventional controls, or they may have to be retrieved from a display system. Hence, soft controls may be considered available but not necessarily present. In addition, the availability of soft controls can be restricted to specific conditions. For example, some soft controls, such as those used for configuring digital control systems, may have protective features (e.g., password protection) that limit their availability to specific personnel or situations.

Physical decoupling of input and display interfaces – Typically, conventional controls are located close to their associated display. That is, operators perform the input actions and monitor feedback at the same location (e.g., when turning a rotary dial, the operator observes its motion and reads the new setting from its perimeter). For soft controls, there may be a looser physical coupling between the location of control action and the presentation of feedback. That is, the operator may take a control action in one place and read the setting elsewhere. For example, when using a pointing interface, the user may manipulate a mouse on a console top to move a cursor across a display screen to select an icon. The results of this action may be displayed in yet another location, such as a window indicating that some equipment has been turned off or on. In this case, the operator must monitor three locations to complete a single control action: the mouse, the icon, and the window. This physical decoupling of the input device (e.g., the mouse) and the displays that present feedback may result in monitoring demands that differ from conventional controls.

Plant control versus interface management control – Actions that control the HSI (i.e., cause displays to be presented) can be distinguished from actions that control the plant. Both types of actions may be performed using the same or different input and display devices. For example, an operator may use a mouse and VDU to access a display and then use the same mouse and VDU to operate a piece of plant equipment (e.g., a pump) from that display. In this case, the mouse and VDU are used to operate both the HSI and the plant.

Multiple modes – While a conventional control typically performs a single control function, a soft control may perform a range of control functions, each representing a different mode (e.g., mode 1 for performing function A, and mode 2 for performing function B). The behavior of these functions is defined by the

software. Options for control actions are usually communicated to the operator via displays. When the operator carries out a control action, the software converts the results into a signal for the control system. Hence, a specific action, such as pressing a button, can produce different results depending on such factors as the particular display page currently accessed, the status of the control system, and the status of the plant.

Complex control functions – Because the operator's actions are interpreted by software, many operations may be initiated via a single action using a soft control. For example, a sequence of operations required to start plant equipment may be linked to a single "Start" command. While conventional control systems also offer this capability (e.g., via relays), software-defined functions can result in more complex linkages among operations.

Interface flexibility – Computer-based technology can allow the user interface of soft controls to be adaptable to changing needs or conditions of use. For example, the operator may be able to arrange the presentation of the control and its associated information based on a current need or personal preference. Alternatively, the control and information may be automatically arranged based on the current situation.

INFORMATION DISPLAY

Information display considerations important to operator performance using soft control systems include the means for selecting the components to be controlled, the display areas where input is entered, and the formats used for entering data. Each of these is described below. General review guidelines for soft control displays are given in Section 7.2.1. The general display characteristics of soft controls should also be reviewed using Section 1, Information Display.

Selection Displays

These are displays used when choosing the variables or plant components to be controlled. Two commonly used formats are the mimic and the list. Review guidelines for selection displays are provided in Section 7.2.2.

Input Fields

These are display areas used for providing input (e.g., entering a new control setpoint). Input fields may appear on an adjacent display device, as a window placed on top of a selection display, or as a data entry field inside a control selection display. Review guidelines for input fields are provided in Section 7.2.3.

Input Formats

These are formats used for entering data. Important characteristics include the representation of formats commonly used with soft control systems (e.g., discrete-adjustment interfaces, soft sliders, and arrow buttons). Review guidelines for input formats are provided in Section 7.2.4.

Display Devices

The display devices on which soft control systems are presented may be either functionally dedicated or general purpose. A functionally dedicated display device is used for a specific function or set of functions (e.g., a display device used only to interact with a particular plant system, such as feedwater control). A general-purpose display device may be used to interact with a broad range of plant systems. This distinction affects where a soft control may be accessed in the HSI and, possibly, the degree of interaction required to access it. For example, if a soft control can be accessed from a set of general-purpose display devices, then it may be accessed from multiple locations in the control room, but a high degree of interface management may be required to retrieve it from the other displays in the network. Conversely, a display device dedicated to a small set of plant variables may require very little interface management to

access the desired soft control. A variety of VDU hardware may be used to present soft controls. Review guidelines for display devices are presented in Section 7.2.5.

USER-SYSTEM INTERACTION

Interactions with soft controls include selecting a plant variable or component to be controlled, providing the control input, and monitoring the system's response. Each is described below. In addition, system response characteristics are also described.

Selecting Plant Variables or Components

A separate step is often required to select the specific plant variable or component that is to be controlled by a soft control. Selection methods may require the user to make a choice from a set of options or to identify a choice from memory. The following interaction methods are commonly used to present the operator with a set of options.

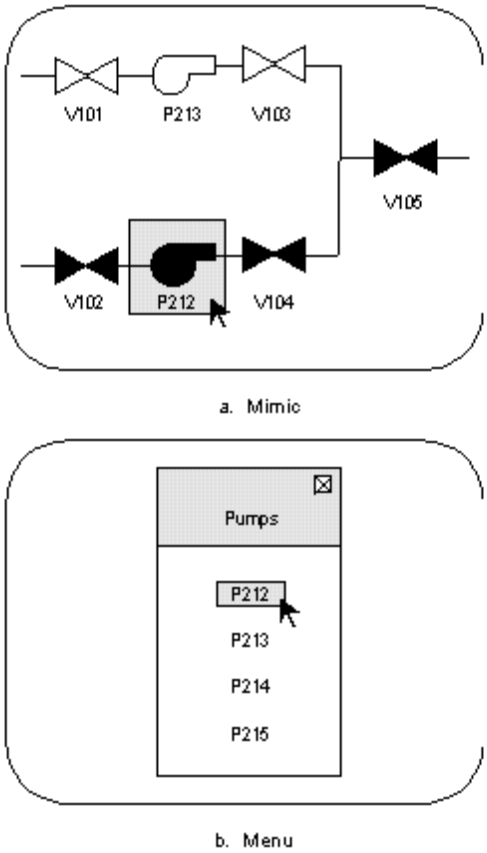

Figure 7.A Two typical displays for selecting variables or components (with on-screen cursor)

Mimic display – Typically, plant components are represented by symbols, and the flow paths (e.g., for mass or energy) are represented by lines. Operators may select a component from a mimic display by using a pointing device. Alternatively, the operator may use a keyboard to enter the identification code for the specific component. The top part of Figure 7.A depicts a component being selected from a mimic display through the use of a cursor.

Menu display – This is a display format that shows a list of alternatives. Selection may be made using a pointing device, function key, or by using a keyboard to enter an identification code. The bottom part of Figure 7.A depicts a component being selected from a menu display through the use of a cursor.

Dedicated button – This is a button whose activation will cause a particular control or display to be retrieved. It may be dedicated to particular soft control. A dedicated button may be a physical 'hard' button located on a keyboard of console or a 'soft' button presented on a computer-based display device.

The following interaction methods generally require the user to identify a choice from memory: command language, natural language, query language, and question and answer dialogues. These methods may be augmented with online forms and other aids to help the operator compose entries. Input is typically provided via alphanumeric keyboards. However, other input mediums, such as voice, are also possible.

Providing Control Inputs

Providing control inputs often requires at least two steps: accessing the input field and providing control inputs. Input fields are areas of the display where users enter values for the control system. These areas may be part of the display used to select the plant component or variable, they may be displayed as a window on that display, or they may be displayed on a separate device. When the input field is integrated into the display, the user provides input directly, e.g., an operator may open or close a valve by clicking on its icon. No additional adjustment of the display screen may be necessary because no new input window is introduced. An example is shown in Figure 7.B. When the input field is window, selection of a component or variable causes a window to appear to accept input. For example, an operator may select a component from a mimic display by clicking on it with a mouse. This causes an input window to be positioned in the display. The display may have a space dedicated to the input window or the window may be superimposed on the display and overlap or obstruct part of it. An example is shown in Figure 7.C. When the input field appears on the screen of a separate display device, the interaction is similar. For example, an operator may select a component from a mimic display by clicking on it with a mouse. This causes the input field to appear on an adjacent display device, allowing the input field to appear without obstructing the user's view of the selection display. An example is shown in Figure 7.D.

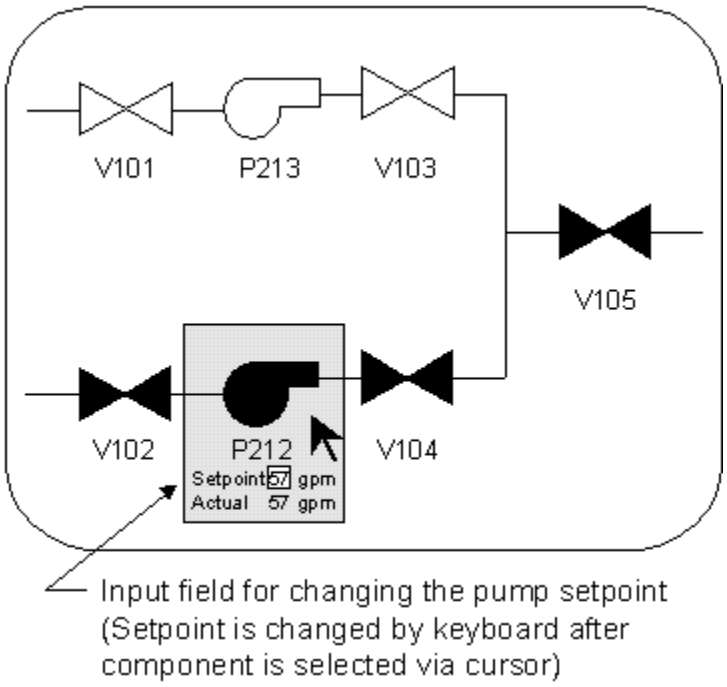

Figure 7.B Soft control input field is integral with selection display

The input field configurations in Figures 7.C and 7.D are more commonly used in process control applications than the integral configuration shown in Figure 7.B. This is because they provide more space for displaying setpoints and other related values.

Once an input field has been accessed, three categories of inputs can be provided to affect the state of the plant: command inputs, discrete values, and continuous values. Each is described below.

A command is an instruction to a computer or system requesting it to perform an action. For example, commands may be given to obtain, transfer, process, store, retrieve, delete, or display information about plant status. Commands may also be used to control the plant (e.g., as an instruction to an automatic control system to perform a function, such as shutting down a piece of equipment).

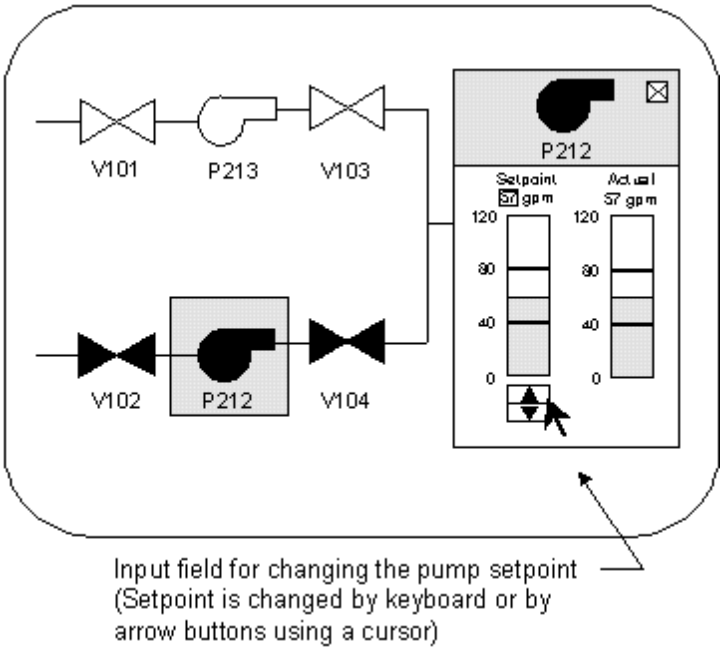

Figure 7.C Soft control input field is a window within the selection display

A discrete variable has a defined set of individual values. The input action involves selecting one of them. Many control actions involve making a selection from a discrete set of states. For example, plant breakers and valves may be changed from the open to the closed state.

Automatic controllers have discrete control modes (e.g., manual, automatic, and cascade). In addition, controls used for interface management may have discrete settings. For example, buttons may be pushed to access particular displays. Input formats used for providing discrete-variable inputs may be referred to as discrete-adjustment interfaces; they have individual settings that can usually be accessed with fairly gross movements. Their operation is similar to physical controls that provide discrete adjustment, such as push buttons and switches.

A continuous variable has a continuous set of values within a defined range. Many control actions involve providing a value from a continuous range, e.g., when changing a control setpoint, the operator increases or decreases the setting of a controller within a defined range. When using physical control devices, continuous variables are often set using continuous-adjustment controls. The desired value is accessed using some type of slewing motion requiring a gross movement followed by a fine adjustment. With soft controls, continuous variables may be adjusted in a variety of ways. Three common means are described below.

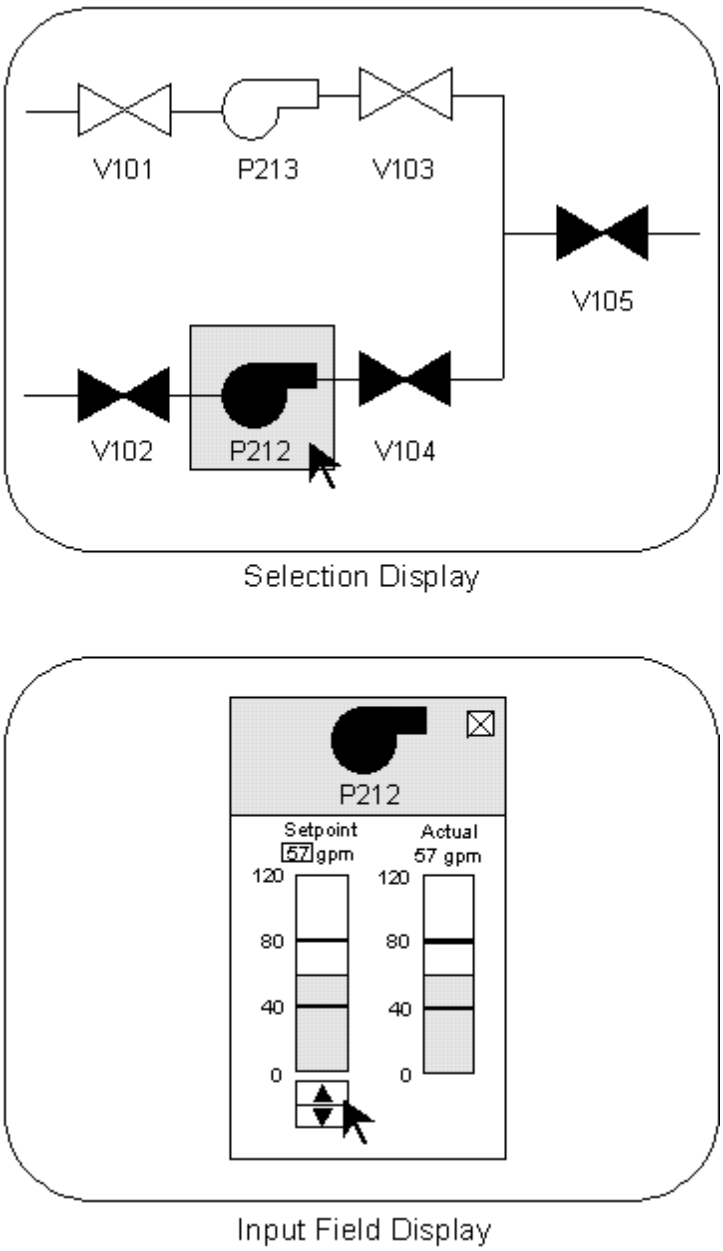

Figure 7.D Soft control input field and selection display are on separate display devices

First, incremental input devices may allow continuous-adjustment such that the position of the device corresponds to the magnitude of the input value. These are similar to continuous-adjustment control devices, such as dials, levers, and sliders. For example, the magnitude of input provided by a dial corresponds to the degree to which it is rotated. A large change in a value requires a large degree of rotation of the dial from its current position. An example is the soft slider (i.e., a slider presented on a computer-based display device), which resembles a bar chart with a pointer directed toward the current value. Input is accomplished by sliding the pointer via a mouse or touch screen interface along the length of the bar chart scale to the desired value.

Second, incremental input devices may accept discrete inputs that change the variable by a specific amount. One example is a pair of buttons pointing in opposite directions that are used to increase and decrease a value sequentially. Arrow buttons may be implemented on a display screen or on a keyboard. Soft buttons are typically presented on the display screen and operated via a pointing device, such as a mouse or touch screen. Hard buttons may be physical keys mounted on a keyboard or panel that are used in conjunction with a display screen. With each press of the increase button, the variable increases by a specific amount. If the button is held down, the variable will increase in proportion to the length of time that the button is depressed.

A common design practice is to have the input value change by the smallest unit of precision presented by the soft control device for each press of the arrow button. For example, if the soft control presents a variable to one decimal place, then one press of the arrow button will change the value by one tenth (e.g., increase the value from 10.1 to 10.2). If the variable is presented in integer values, then one button press will change the current value to the next integer (e.g., increase the value from 11 to 12). If a variable has a wide range, executing a large change in the value may require pressing the button many times or holding it down for a long time. Some soft controls feature a second set of arrow buttons that can change the input value by a larger amount for each button press. For example, single arrow buttons [>] may be used for making small changes and double arrow [>>] buttons for making large ones. The size of the increment provided by the double arrow buttons may be configured by the control system engineer for each soft control. The standard values provided by the vendor for the double arrow buttons are 2%, 3%, 5%, or 10% of the range of the instrument. Other values may be programmed.

In some computer-based control systems, the size of the increment provided by incremental input devices may change as a function of plant or system state. For example, a single press may produce a large change during plant startup but a small change when the plant is in its normal operating range.

Finally, keyboards and number pads may be used to enter values in digital form using a set of key actuations, e.g., the value '100.7.'

Several formats may be combined in a single soft control.

Monitoring Control Feedback

Control feedback refers to indications provided to the user that show whether the user’s entry was accepted by the system, whether the system is responding to the input, and whether the input is having the desired effect. Each is described below.

System Acceptance Feedback

System acceptance refers to feedback that indicates whether the user correctly performed the input action. For example, when an operator provides an input, an indication is given to show whether the user interface was manipulated properly. Feedback may entail visual cues, such as computer-based buttons that change color when selected, and auditory cues, such as a click accompanying a selection. The system should also provide feedback indicating whether the user's entry was acceptable. For example, if the user enters a value that is outside of acceptable range or selects an unacceptable command, the system should alert the user by visual cues (e.g., changes in symbols to indicate that the user entry is not acceptable or that the selected option is not available), warning messages (e.g., a description of the problem), or auditory tones (e.g., a tone that directs the user’s attention to the problem). The soft control should also display the user’s entry in a way that allows the user to review it and determine whether it is correct. A variety of text and graphical approaches can be used. For example, when the operator enters a control setpoint, the value may be presented in text format by displaying the digits via the user interface. The setpoint may also be represented graphically. One commonly used format is the bar chart. The bar is usually depicted against a reference scale with its length or height corresponding to the magnitude of the

input value. Text and graphic feedback may be combined. For example, the input value may be depicted in both digital and bar chart formats.

System Response Feedback

System response feedback indicates whether the user's entry, which was accepted by the system, is being acted upon. For example, an operator may use a soft control to operate a pump by entering a new (higher) control setpoint for pump speed. After providing acceptance feedback indicating that the new setpoint was within the acceptable range, the soft control should provide system response feedback indicating whether the pump is responding to the new setpoint. That is, the operator should be able to determine whether the speed of the pump is increasing toward the setpoint value. To provide this type of feedback, the soft control should be coordinated with plant displays that indicate system status.

Goal Achievement Feedback

Goal achievement refers to feedback that indicates whether the input is achieving its intended goal (e.g., moving the plant toward a safer state). For plant control actions, such as adjusting the flow rate of a feedwater pump, it is necessary that the operator determine that the intended goal (e.g., increased steam generator level) is achieved. To provide this type of feedback, the soft control should be coordinated with plant displays that indicate system and plant status. For example, mimic displays can support the operator in selecting plant components, monitoring the system's response, and monitoring goal achievement. When selection displays and input fields are implemented in other ways, such as via menus and tables, respectively, the higher-level goals affected by the control action may not be readily visible.

System Response Time

Total system response time may be described as the time between the submission of an input to the soft control system and the various types of feedback. For soft controls, system response time may affect the ability of operators to control the plant. Four response time factors are described below.

Display retrieval time is the time required for the HSI to present a new display following the onset of a command. For soft controls, this includes the time required to retrieve: (1) a selection display, and (2) the input field with which operators provide input. Slow response time for retrieving displays can delay the operators' access to important information.

Display update time is the interval with which plant variables shown in the soft control or associated displays are updated with new data. If the update rate is slow relative to the behavior of the plant, then a soft control or display could present data that is not representative of the current state of the plant.

Sampling rate and interval for inputs is the number of scans of an input field per unit of time. The sampling interval is the amount of time between samples. Computer-based display systems typically scan the input fields for new input from the operator. If the sampling interval is large, then a long delay could exist between when an input is entered and when it is received by the control system.

Plant response time is the interval between the time at which an input is received by the control system and the plant achieves the desired state. It may have two components: (1) response time for the plant system (i.e., the time required for plant equipment to respond, such as an electrical breaker closing) and (2) response time for the plant process (i.e., the time required for the plant process to achieve the desired goal state, such as reaching a target temperature value). These response times can be fast or slow. If the response is slow then the operator may have difficulty determining whether an input value was too high or too low. As a result, the process value may overshoot or undershoot the target value. If the response time is fast, the operator may lack sufficient time to recognize and respond to input errors.

These response times, combined with operator response time, determine the overall response of the human-machine system. For example, the total time required to access a particular display is the sum of the time required for the operator to select the display and the HSI to respond (display retrieval time). The

total time required for achieve a desired change in plant state is equal to the sum of the time required for the operator to enter the input value, the HSI to sample the input value, the plant to respond to the input, and the HSI to represent the change in a display.

CONTROLS

Soft controls are implemented using a broad range of input devices, including those presented in Section 3; thus, no unique guidance is provided for soft control input devices. In addition, conventional, hardwired control devices may also be used if their operation is interpreted by software (e.g., to access multiple plant variables). For example, a physical pushbutton located next to a display screen could perform several different functions depending upon the information presented in the display screen. Finally, soft control systems may also be operated via speech input; review guidelines for speech input are provided in Section 2.2.10.

BACKUP CAPABILITIES

If the failure or loss of availability of the soft control system may affect operator tasks that are important to plant safety, then backup systems should be addressed. For example, a separate set of conventional controls may be provided as an emergency backup for controls that are important to plant safety.

INTEGRATION WITH OTHER HSI ELEMENTS

The consistency and compatibility of the soft control system with the rest of the HSI can affect operator performance. Thus, important review considerations include the degree to which the control devices and displays of the soft control system are compatible with other controls and displays of the HSI.

7 SOFT CONTROL SYSTEM

7.1 General

7.1-1 Coordinating Soft Control Use Among Operators

If a soft control can be accessed from more than one location in the HSI, protective measures should ensure its coordinated use among multiple users.

Additional Information: The HSI should be designed to allow operators to maintain awareness of each other's use of the soft control so their actions do not interfere. For example, two operators should not be able to operate the same soft control simultaneously from different places without being aware of each other's actions. Coordination problems may be minimized by assigning the control capability for a soft control to a particular individual or workstation (e.g., while the settings of a soft control can be viewed from multiple display devices, it can only be operated from one device). Alternatively, coordination may be supported by features that restrict access to soft controls one user at a time, and group-view displays that allow operators to observe each other's actions.[6635]

7.1-2 Operation with Protective Clothing

Soft controls should be designed to accommodate any protective clothing that personnel may be required to wear.

Additional Information: In some plant locations, environmental conditions necessitate wearing protective clothing that can limit the ability of personnel to manipulate soft controls. For example, gloves may reduce manual dexterity and tactile sensitivity, degrading the ability of personnel to operate soft controls quickly and accurately. As another example, eye protection, such as goggles, may become foggy or distort vision and, thus, interfere personnel's ability to view computer-based display devices.[6635]

7 SOFT CONTROL SYSTEM
7.2 Information Display
7.2.1 General

7.2.1-1 Representing Relationships Between Control System Components

The display capabilities of soft controls should allow users to quickly assess the status of individual components of a control system and their relationships with other components.

Additional Information: Due to the limited size of the display devices used with soft controls, not all components of a control system may be visible to the operator at once. However, they should allow the operator to rapidly view relationships between functionally related components. For example, if a controller is part of a hierarchical control system, the operator should be able to see higher-level controllers that provide control inputs and lower-level ones that receive inputs. Rapid assessment of the control system's status should be supported by such features as displays that depict these relationships, and retrieval mechanisms that give rapid access to detailed information on individual control system components.[6635]

7.2.1-2 Making Options Distinct

The interface should be designed so that users can, at a glance, distinguish options by such characteristics as context, visually distinct formats, and separation.

Additional Information: Slips involve errors in performing well-practiced, unconscious actions. Description errors, a type of slip, involve performing the wrong set of well-practiced actions for the situation. They occur when the information that activates or triggers the action is either ambiguous or undetected. Many control input actions involve the selection of options, such as choosing between alternative commands or selecting a plant component to perform a control action upon it. Description errors that result in selecting a similar but incorrect option may be prevented by organizing options to supply context (such as by functional organization), making options visually distinct, and separating options that users may confuse. Options may be separated by placing them on different display pages or different display devices.[6635]

7.2.2-1 Visually Distinct Selection Displays

Displays used for selecting components and variables should be visually distinct to support choice of the correct display.

Additional Information: A selection display shows a set of components or variables that may be chosen for a control action. One common format is the mimic, in which components are arranged as a schematic diagram. Excessive reuse of layouts and display elements in mimic displays may cause them to look alike and so may contribute to operators searching the wrong selection display for the component that they wish to manipulate. Selection displays should be laid out and labeled so operators readily recognize and distinguish them.[6635]

7.2.2-2 Visually Distinct Components

The representation of components and variables within selection displays should be visually distinct to support their correct selection.

Additional Information: Using a standard set of symbols and layout conventions in displays is important in reducing the mental workload associated with finding and interpreting information. However, these factors may also cause components to look alike and may contribute to operators selecting the wrong component. The symbols and graphical icons used to represent different types of components should be designed to be readily recognized and distinguished. In addition, they should be clearly labeled for correct identification.[6635]

7.2.2-3 Identification of Loops on Multiple-Loop Controllers

The loops of multiple-loop controls should be distinctly marked to prevent the selection or use of the wrong loop.

Additional Information: A multiple-loop controller is a digital controller that can control multiple variables via independent channels, one per control loop. Each channel acts as a separate control device. For example, a single controller may be capable of controlling 10 different variables, each on a separate control loop. Operators access these loops through the user interface of the controller device. However, because there may be few cues to identify the loops, operators may fail to correctly recognize the loop accessed and may control the wrong variable.[6635]

7.2.3-1 Cues for Matching Input Fields to Selection Displays

A user looking at the field for providing a control input should be able to determine which plant component or variable is being controlled.

Additional Information: The design of a soft control should provide a salient link between the input field and the corresponding variable or component. Starting at the input field, the operator should be able to quickly trace the component or variable back to its representation in the display that was used to select it. Three methods that might be used are graphic coding, landmarks, and animation. Graphic codes, such as borders, symbols, and colors, may be applied to both the representation of the component in the display from which it was selected and to the input field, making a strong visual association between them. For example, if the selection display has a mimic format, the input field may contain the symbol for the selected component. It also may contain symbols for the components that precede and follow it in the flow path. Animation may be used when an input field is opened and closed. The input field could appear as if it were 'popping out' of an option selected from a display, and 'go back' into the option when the field is closed.[6635]

7.2.3-2 Labeling of Input Fields

The input field should be labeled with sufficient information to uniquely identify its corresponding component.

Additional Information: Labeling should include a unique identification code for the component, matching its representation in the selection display. It may also describe the component (e.g., valve, pump, breaker) and identify those components that immediately precede and follow it in the system.[6635]

7.2.3-3 Coordination of Soft Controls with Process Displays

Displays should be readily accessible from the input field so the user can readily verify that the control actions have had the intended effect on plant systems and processes.

Additional Information: Inadequate coordination of input fields with plant process displays can make it difficult for operators to verify that control actions have had the desired effects on plant systems and processes.[6635]

7.2.4-1 Appropriate Use of Discrete-Adjustment Interfaces

Discrete-adjustment interfaces should be used for selecting among a set of individual settings or values.
Additional Information: Discrete-adjustment interfaces are computer-based formats with individual settings that can be accessed by fairly gross movements; their operation is similar to discrete-adjustment controls, such as push buttons. By contrast, continuous-adjustment interfaces are computer-based formats that have continuous ranges usually accessed using some type of slewing motion, requiring a gross movement followed by a fine adjustment; their operation is similar to that of continuous-adjustment controls, such as rotary dials or sliders. Discrete-adjustment interfaces are preferred when the user must select one option from a limited number of choices, or when precision requirements are such that a limited number of settings can represent the entire continuum of values. The most common discrete-adjustment interfaces used with soft controls are individual buttons and radio buttons (a group of buttons representing a set of related options). However, other formats also are possible, such as rotary selector dials operated via cursor or gestural interfaces. Some computer interfaces have a continuous-adjustment control, such as a slider or scroll bar, for looking at a group of individual options. Because choosing a specific setting with a continuous-adjustment control can be awkward, there should also be a discrete-adjustment control, such as a set of arrow buttons.[6635]

7.2.4-2 Labeling Selection Options in Discrete-Adjustment Interfaces

The selection options in discrete input formats should be clearly labeled.[6635]

7.2.4-3 Feedback for Discrete-Adjustment Interface with Multiple Settings

Discrete-adjustment interfaces should indicate which setting was selected.[6635]

7.2.4-4 Feedback for Discrete-Adjustment Interface with Continuous Operation

If a discrete-adjustment interface has continuous operation, it should provide continuous feedback on the current state.
Additional Information: A continuous-operation control continues to produce an effect until the user provides the next input, or until a predefined action sequence is stopped by a termination criterion. An example is a button that changes to the activated state when pressed and remains in that state until it is pressed again. An example of continuous feedback in a soft control is a checkbox format in which an 'X' appears in the box to indicate that an option has been selected, and disappears only after the option is de-selected.[6635]

7.2.4-5 Appropriate Use of Continuous-Adjustment Interfaces

Continuous-adjustment interfaces should be used when precise adjustments along a continuum are needed or when many discrete settings are present.
Additional Information: Continuous-adjustment interfaces, such as soft sliders, provide continuous adjustment and are, therefore, suited to selecting a setting from a continuum. Because these interfaces often require a gross slewing movement followed by fine adjustment, setting them correctly may require more time and attention than discrete input formats. Therefore, they should not be used in place of a discrete-adjustment interface for selecting from a small set of options.[6635]

7.2.4-6 Appropriate Use of Soft Sliders

A soft slider should be considered as an input device when the range of possible values and the ratio of a value to that range need to be displayed.

Additional Information: A soft slider (also called a slider bar or a scroll bar) is an input format used to directly manipulate a variable over a set range of values. Soft sliders are typically maneuvered via pointing interfaces, such as a touch screen or mouse. They may require careful hand-eye coordination to ensure that the pointing device does not leave the linear path of the slider nor overshoot or undershoot the intended target. If the user's tasks do not permit careful hand-eye coordination, then other interfaces, such as arrow keys, should be used. The slider sometimes is combined with arrow buttons.[6635]

7.2.4-7 Indicating the Range of Values on Soft Sliders
The range of values should be indicated on horizontal sliders with the low value on the left and the high value on the right, and on vertical sliders with the low value on the bottom and the high value on the top.[6635]

7.2.4-8 Displaying the Digital Value on Soft Sliders
The numerical value to which a soft slider is set should be presented in digits on the soft slider.[6635]

7.2.4-9 Dimensions of Soft Sliders
The physical dimensions of the soft slider should allow the user to read the current and target positions and position the slider with the required precision, accuracy, and response time.
Additional Information: The length of the slider is determined, in part, by the range of values depicted, the increments between individual values, the degree of precision required for reading the slider's position, and the user's expected viewing distance. The accuracy with which the slider may be positioned may be affected by characteristics of the input device (e.g., mouse devices may allow more accurate positioning than a touch interface due to the size and irregular shape of the finger). A very short slider may be difficult to read or position precisely. A very long slider may produce slow response times due to the long distance that must be traveled and the need to keep the pointing device on its linear path.[6635]

7.2.4-10 Depicting Critical Ranges on Soft Sliders
When part of the range of values depicted by a soft slider represents critical information, such as alarm limits, those values should be coded to facilitate recognition.
Additional Information: Graphical codes may be applied to distinguish the normal operating range, alarm limits, and other abnormal operating ranges.[6635]

7.2.4-11 Appropriate Use of Arrow Buttons
A set of arrow buttons should be considered as the input device when it is desirable to incrementally increase or decrease a variable from its previous value.
Additional Information: Arrow buttons change values sequentially as each increase or decrease button is pressed. In addition, values may change continuously if a button is held down. These inputs provide feedback about the magnitude of the change (i.e., the magnitude increases with the number of presses or the time that a button is held down). Such feedback may reduce the likelihood of producing large errors or increase the likelihood of detecting them. Some soft controls have two sets of arrow buttons, one for small and one for large incremental changes. Arrow buttons are sometimes combined with a slider in a soft control.[6635]

7.2.4-12 Indicating Current Value for Arrow Buttons
Arrow buttons should have a display indicating the current value of the variable being controlled.
Additional Information: The current value should be shown in a format consistent with the type of variable being controlled. Numerical values should be presented as digits, and textual values (e.g., Low, Medium, and High) as words.[6635]

7.2.4-13 Uniform Changes in Values Via Arrow Buttons

Each press of an arrow button should change the current value uniformly.[6635]

7.2.4-14 Feedback Regarding Arrow Button Actuation

Arrow buttons should provide salient feedback when they are actuated.
Additional Information: Feedback should be sustained when the button is held down and momentary when the button is momentarily pressed.[6635]

7.2.4-15 Apparent Operation of Arrow Buttons

Labeling and other coding should be used when the operation of the arrow buttons is not apparent.
Additional Information: For example, when arrow buttons are used to change a date display, it may be unclear whether actuating a button will incrementally change the days (and change the month when the last day is reached), or whether the month and day values are changed separately after being selected by the user. The arrow buttons should be labeled or coded to indicate their effects.[6635]

7.2.4-16 Reference Values For Continuous Variable Inputs

Reference values should be provided to help the user judge the appropriateness of values when entering continuous variable inputs.
Additional Information: Reference values commonly used in process control applications include the variable's range, alarm limits, and the current value. Reference values may be presented as digits or graphs.[6635]

7.2.5-1 Adequate Display Area

Adequate display space should be provided so that short-term monitoring and control tasks do not interfere with longer-term tasks.

Additional Information: Making control actions available via a general-purpose display device may require other plant information to be removed from the user's view. Sufficient general-purpose display devices should be provided so that short-term control actions can be undertaken without interfering with long-term ones (e.g., they can be performed on separate devices). Alternatively, control actions can be supported by dedicated special devices.[6635]

7.3.1-1 Minimizing Soft Control Modes

The excessive use of modes in soft controls should be avoided.

Additional Information: Modes occur in soft controls when a display or input device is designed for more than one function. For example, a soft control that is used for manipulating multiple variables may have a separate mode for each one (e.g., individual modes for variables A, B, and C). In addition, there may be multiple modes for a single variable, each allowing it to be controlled in a different way (e.g., variable A may have separate modes for manual control, automatic control, and testing). Mode errors occur when the user believes the device is in one mode when it is in another and, as a result, performs an inappropriate input action. The likelihood of mode errors can be lessened by reducing the number of modes; if multiple modes do not exist, then mode errors cannot occur.[6635]

7.3.1-2 Distinctive Indication of Soft Control Modes

When multiple modes exist, they should be distinctively marked so the user can determine the current mode at a glance.

Additional Information: Distinct labels may be used to indicate the currently active mode.[6635]

7.3.1-3 Coordination of Destructive and Safety-Significant Commands Across Modes

A command that produces a benign action in one mode should not cause a different action with serious negative consequences in another mode.

Additional Information: A command is an instruction provided by a user requesting a computer system to perform a particular action. Actions that are destructive (e.g., delete file) or have serious safety consequences should have unique commands. For example, the function key 'F2' should not have a benign action, such as listing a directory, in one mode but a destructive action, such as deleting a file or operating important plant equipment, in another mode.[6635]

7.3.1-4 Unique Commands for Destructive and Safety-Significant Commands

Unique commands associated with actions that have important consequences should not be easily confused with other commands used in the same or different modes.

Additional Information: Reserving special commands for special actions can prevent mode errors because, if the command is entered while the device is in the wrong mode, it will not be accepted by the system. A unique or reserved command should not be so similar to other commands that a valid entry may result from incorrectly entering another command. For example, if the command 'CNTL X' is reserved for a special action, then similar commands, such as 'ALT X' and 'Shift X,' should not be valid, even in other modes. The combination of a mode error and the incorrect entry of the command may execute an unintended action.[6635]

7.3.1-5 Discrimination of Interface Management Actions and Process Control Actions

The design of the user interface should clearly distinguish between interface management actions and process control actions.

Additional Information: Actions required for interface management tasks and plant control tasks should look different. This may be accomplished by providing different interfaces, different coding for interfaces, and, possibly, different input devices.[6635]

7.3.1-6 Reducing the Likelihood of Unintended Actuation

For actions that can have significant negative consequences, the user interface should be designed to reduce the likelihood of unintended actuation by requiring deliberate action for their execution.

Additional Information: Deliberate actions should be required for inputs having serious potential consequences. Actions that require physical effort in the form of multiple steps or higher actuation forces may be less likely to occur accidentally as the result of a random motion of the user. In addition, actions that require greater attention, such as multiple steps and checks, may reduce the likelihood that the user will revert to the type of 'automatic' activity that could cause a slip. However, control actions that require multiple steps also should be designed to reduce the likelihood of other errors (i.e., the failure to complete a set of steps in the correct order).[6635]

7.3.1-7 Feedback For Selected Actions Before Execution
The HSI should give the user feedback indicating the action that was selected and allow the action to be canceled before it is executed.
Additional Information: The goal of this recommendation is to avoid unintended manipulation of plant equipment or unintended interface management actions. Feedback about the selected option is important because a broad range of actions may be accessed through a soft control device, including manipulation of various plant components and of the user interface. The close proximity and similarity of input options within the display area may result in users selecting the wrong ones. Users should be able to cancel or modify an action if they determine that its execution would be undesirable.[6635]

7.3.1-8 Use of Error-Mitigation Approaches
Error-mitigation approaches should not be the sole means for achieving error tolerance, but should be used in conjunction with other means for error prevention and system-assisted error detection.
Additional Information: Error-mitigation mechanisms limit the effects of incorrect inputs after they have been entered into the control system. Two strategies include reducing the rate of the system's response and deferring it. Both are intended to provide time for detecting and correcting input errors and for reversing them. Error mitigation should not be considered a substitute for error prevention and detection.[6635]

7.3.1-9 Undo Features
If undo features are provided they should be consistently available.
Additional Information: Undo features minimize the effects of users' errors by allowing them to undo or reverse previous actions. Users tend to rely upon undo features and incorporate them into their work. Failures of undo features may have worse consequences than if they were not provided in the first place. For example, operators may be more willing to delete files if they think they can recover them.[6635]

7.3.2-1 Indicating the Status of Sequential Actions

Computer-based HSIs should support users in rapidly assessing the status of sequential actions in progress.

Additional Information: An action sequence is a set of operations that must be performed in a specific order. Errors involving misordering the components of an action sequence include skipped, reversed, and repeated steps. Soft controls may be more prone to this type of slip than conventional controls because they introduce additional operations for accessing controls and displays and providing inputs that also often have sequential constraints on their execution. In addition, many control operations must be performed in particular sequences. For example, when configuring a fluid system, it may be necessary to establish the flow path, control mode, and setpoint of a flow controller in a specific sequence of operations (e.g., A, B, C, D, and E). One form of error occurs when a user skips a step thinking that it was completed. For example, a user may perform operations A, B, and C and after some delay or interruption, may perform operation E thinking that D already was finished. The repetitiveness of the task is a factor in this type of error. If a user has performed a set of operations repeatedly on several identical controllers, the memory of performing a particular operation on the other controllers may increase the likelihood of the user incorrectly concluding that the operation was completed on the present controller. Thus, the sequentiality of soft controls can interact with repetitive, sequential tasks to increase the probability of errors involving misordering the components of the action sequence. The display design of computer-based HSIs should support users in identifying tasks that are in progress; ideally, they should be designed so that the status of related operations (e.g., A, B, C, D, and E) can be checked at a glance from a single display.[6635]

7.3.2-2 Drawing Attention to Points Where Similar Sequences Diverge

The design of the HSI should draw the user's attention to points where operational sequences that have multiple steps in common begin to diverge from each other.

Additional Information: A capture error occurs when an infrequently performed action requires a sequence of operations that overlaps with the sequence required for a frequently performed action. In attempting the infrequent action, the frequent one is performed instead. For example, a user intends to perform task 1, consisting of operations A, B, C, and D, but instead executes the more frequently performed task 2, (composed of operations A, B, C, and E). Capture errors often occur at the point of divergence of the frequently and infrequently performed sequences. HSI design efforts may be directed at that critical point to bring it to the user's attention. For example, if the control system knows the user's intention (e.g., by requiring an indication of the overall intention), it could highlight the proper path at the choice point, or initiate a warning if the wrong one is taken. Another approach is to draw the user's attention to important choice points (i.e., points where the sequence of operations differs from the sequences of similar tasks) by coding, labeling, and caution messages. Yet another way is to incorporate features drawing attention to the operational significance of alternative paths and supporting an understanding of which path has been taken.[6635]

7.3.2-3 Interruption of Transaction Sequences

The HSI should allow the user to interrupt or terminate a current transaction sequence.

Additional Information: A transaction sequence is a series of steps undertaken to accomplish a larger task. For example, the task of changing a control setpoint may involve multiple steps for selecting the variable and entering the new value. If different types of interruptions or terminations exist, then each should have a separate control option and a distinct name. Table 7.1 lists interruption and termination types.[6635]

Table 7.1 Different types of interruptions or terminations for transaction sequences

Back or Go Back	A nondestructive option that returns the display to the last previous transaction.
Cancel	An option that erases changes just made by the user and restores the current display to its previous state.
End, Exit, or Stop	An option that concludes a repetitive transaction sequence.
Pause and Continue	Options that interrupt and later resume a transaction sequence without any changes to either the data entries or the logic of the interrupted transaction.
Restart or Revert	An option that cancels entries made in a transaction sequence and returns the user to the beginning. If a restart will result in the loss of data or changes, a confirming action is required of the user.
Review	A nondestructive option that returns to the first display in a transaction sequence, permitting the user to review a sequence of entries and make necessary changes.
Suspend	An option that permits the user to preserve the current state of a transaction while leaving the system and permits resumption of the transaction later.

7.3.2-4 Interrupted Sequence Prompt

The HSI should support the user in maintaining awareness or recalling tasks that were interrupted or suspended by giving a reminder.

Additional Information: A loss-of-activation error occurs when an intended action is not carried out due to a failure of memory (i.e., the intention has partially or completely decayed from memory). One way of preventing loss of activation is to have an on-screen message reminding the user of the suspended task. If necessary, the system should prompt the user with information on how to resume it. A second approach is to provide more display screens or implement a window-based display system to keep tasks that are in progress visible, as they would be in spatially dedicated conventional control rooms.[6635]

7.3.2-5 Resumption of Interrupted Sequences

A minimum number of actions should be required to resume a control-action sequence that was temporarily suspended.

Additional Information: When a user has interrupted a sequence of operations, a minimum number of actions should be required to resume it. The user should not be required to restart the sequence from the beginning. One way of supporting the user in finding a display containing a suspended task is to have a 'previous display' feature that accesses a sequence of previous displays. A second approach is an interaction history feature that lists previously accessed displays and provides access to them. A third method is to include a 'bookmark' feature allowing users to designate displays containing tasks that are in progress. Thereafter, few actions or none should be required to resume the task.[6635]

7.3.3-1 Separate Action For Verification Steps

Verification steps should be separate from input actions.

Additional Information: Verification steps are usually steps added to the input action. For example, the user selects an option and then presses the Enter key to verify it. Verification steps reduce the likelihood of input errors by increasing the effort (i.e., the number of steps) and drawing users' attention to the input operation. However, they can lose their effectiveness if users can perform them unconsciously as part of the input action.[6635]

7.3.3-2 Confirmation of Goals

When feasible, confirmation steps should draw attention to the goal of the action, not just to the action.

Additional Information: Confirmation steps require the user to respond to a warning or advisory message. For example, the user may respond to the question, 'Are you sure you want to do this?' by pressing 'Yes' or 'No.' Like verification steps, confirmation steps attempt to reduce input errors by increasing the effort (i.e., the number of steps) and drawing users' attention to the input operation. A problem with confirmation steps is that they are often ill timed, occurring just after the user initiated the action and is still fully content with the choice. If the user requests an action but specifies the wrong object to be acted upon (e.g., the user requests a file deletion but specifies the wrong file), the system's request for confirmation is not likely to help the user detect the error. At this point, the user is apt to focus on confirming the action (e.g., deletion) rather than the object (e.g., which file). The potential benefits of confirmation steps should be weighed by comparing their effects on the user's response time (e.g., potential delays) to the potential consequences associated with the errors that are being guarded against.[6635]

7.3.4-1 Use of Interlocks, Lockouts, and Lockins

Interlocks, lockouts, and lockins should be provided to restrict personnel actions that may affect plant safety.

Additional Information: An interlock is a feature that requires user actions to proceed in a specific sequence. A lockout prevents personnel from providing input that may generate a negative effect. Statically defined lockouts may restrict inputs to a specific, predefined range or set of values. Context-sensitive lockouts may restrict input values based on the current situation. A lockin keeps an ongoing operation active by preventing personnel from terminating it prematurely. Personnel actions that may affect plant safety include control actions and manipulating stored data important to safe plant operation.[6635]

7.3.4-2 Override of Interlocks, Lockouts, and Lockins

The design of interlocks, lockouts, and lockins should not limit the users' authority unless there is a clear safety reason.

Additional Information: Error-prevention measures (e.g., interlocks, lockouts, and lockins) that cannot be overridden by the user may be detrimental to safety. Sometimes a normally undesirable tactic may be the only thing a user can do to solve a problem.[6635]

7.3.4-3 Visibility of Interlocks, Lockouts, and Lockins

Interlocks, lockouts, and lockins should be designed to indicate which actions are being blocked and what conditions activated the block.

Additional Information: A lockout blocks inputs that it considers unacceptable or not achievable. When this occurs, the user should be able to determine why an input was blocked and what inputs are acceptable, especially for context-sensitive validation in which complicated rules may be used for assessing the acceptability of an input value. An interlock should inform the user of the condition(s) that activated it and the conditions that must be satisfied to release it. Lockin features should show the user what action is being 'locked in' (i.e., the action that is being caused to operate without interruptions) and how it can be canceled.[6635]

7.3.4-4 Automatic Logging of the Activation of Interlocks, Lockouts, and Lockins

The activation of an interlock, lockout, or lockin should be automatically logged.[6635]

7.3.4-5 No Automatic Actuation of Blocked Actions

An interlock, lockout, or lockin should not initiate an action that was previously blocked merely because the status of the triggering condition has changed.

Additional Information: If operation B was blocked because condition A was not satisfied, the system should not automatically start operation B when condition A is met. Instead, a separate action should be required (e.g., the user should be required to take a specific action to allow operation B to resume).[6635]

7.3.5-1 Warning Message Content

Warning messages should draw users' attention to the goal of the action, not just to the action.
Additional Information: Actions may be described in many levels of detail. Often error messages are not effective because they are directed toward the wrong level of detail, so that the description of what is wrong may not match the user's understanding of what was done. An alternative is to allow the user to interrogate the warning. For example, the initial warning could be given at a very high level, corresponding to the system's understanding of the user's intent but then could allow the user to obtain information at lower, more detailed levels, such as describing how the action was performed and why it was inappropriate for the goal.[6635]

7.3.5-2 Automatic, Self-Correct Features for Interface Management Action

Automatic, self-correcting features should only be used for interface management actions, such as retrieving displays.
Additional Information: Automatic, self-correcting features detect and automatically correct errors that users make when providing inputs; for example, a 'Delete' command that is incorrectly entered as 'DLE' will be automatically changed to its correct form 'DEL' and then executed. These systems can interfere with user's activities if their error-detection facilities are overgeneralized (i.e., they interpret correct entries as being errors), since the system may substitute an incorrect response for the correct one provided by the user, thereby affecting plant operation and safety. Additional mental burdens may be imposed on the user to learn, remember, and anticipate the types of correct inputs that these systems will interpret as errors. Therefore, automated, self-correcting features should not be employed for plant-control actions. Instead, other approaches should be used, such as warnings and confirmation steps.[6635]

7.3.5-3 Undo Capabilities for Self-Correct Features

Automatic, self-correcting features should only be used if they include good 'Undo' capabilities, so that inappropriate changes made by the system can be reversed by the user.[6635]

7.3.5-4 Use of Inspection and Transfer Steps

Inspection and transfer steps should be considered if inputs are complex, or if incorrect inputs can seriously affect safety.
Additional Information: Inspection and transfer steps are intermediate steps included in a sequence of operations to create additional opportunities for detecting and correcting faulty inputs. Rather than entering data directly into the control system, the data may be sent to a holding file for review and approval. Thereafter, a command may be entered to transfer the data from the holding file into the active portion of the control system.[6635]

7.3.6-1 Identification of Plant Variables and Components

The HSI should support the identification of plant variables and components based on recognition rather than relying strictly upon recall.

Additional Information: The HSI should present the options available to users for selecting plant variables and components. For example, they may be shown via menus or mimic displays to facilitate recognition. Where there are multiple variables, their selection should not be based strictly upon the ability of operators to recall components' identification codes.[6635]

7.3.6-2 Simple Input Actions for Selection

The user should be able to select a component or variable from a display by using simple input actions.

Additional Information: Multi-step or complex input operations, such as transcribing identification codes, should be avoided. The demands of making a selection should be minimized so as not to compete with cognitive resources needed for assessing plant conditions and planning responses. However, in some cases, such as for controls that are very important to plant safety, more complex actions may be required to reduce the likelihood of accidental actuation.[6635]

7.3.6-3 Minimize Action-Sequence Errors for Selecting Plant Variables

If a sequence of actions is required to select a component or variable, the HSI should be designed to prevent misordered action-sequence errors.

Additional Information: When a soft control is used to manipulate multiple plant components or variables, the user may need to select one, perform the control action, and then deselect it before controlling the next. Errors involving misordering the components of an action sequence may occur. If the user fails to deselect the last component or variable (i.e., the one that was previously controlled), the control action may be performed on the wrong one. The HSI may minimize the likelihood of misordered action-sequence errors by minimizing the number of selection steps, reducing sequential constraints on selection steps, and providing feedback for identifying out-of-sequence steps.[6635]

7.3.6-4 Minimize the Number of Retrieval Steps for Controls that are Used Together

When a group of controls must be used together, their retrieval should require a minimal number of actions.

Additional Information: Excessive selection steps can prevent prompt access to controls and can cause misordered action-sequence errors. One approach to reducing the number of selection actions is to present, on the same display, controls that are used together.[6635]

7.3.7-1 No Activation When Display Is Inoperable

Users should not be able to activate a soft control if its display is not working.
Additional Information: A reported problem with touch screens is that sometimes their buttons may remain active even though the video image is not visible. Thus, a user could touch a blank screen and provide a valid input. Such problems may be avoided by requiring multiple actions, such as separate selection and activation steps, for inputs that may have serious consequences (e.g., affect the operation of plant equipment).[6635]

7.3.7-2 Automatic Reset of Multi-Variable Controls

If an input device controls more than one variable, the user should not have to reset the device to match the value of the new variable before executing a control action.
Additional Information: When switching between variables, the control should automatically display the current value of that variable and position the input device consistent with that value. The user should not be required to adjust the input device to match the current value of a new variable. For example, if variable A is currently set at a value of 100 and variable B at 10, when selecting the latter, the user should not be required to adjust the input device to the 10 position before executing a control action.[6635]

7.3.7-3 Numerical Input Values

The HSI should provide feedback to support the user in verifying the correctness of numerical values entered.
Additional Information: At a minimum, the value should be depicted as digital readout. However, additional feedback can further aid users in detecting input errors. For example, for control setpoints, reference values can convey the implications of the new value for plant operations and, thus, support the user in identifying a value that is too large or too small. Reference values include the actual value of the process variable, the current setpoint value, the normal operating limits, and the alarm limits. Graphical feedback might include a bar chart depicting the input value (i.e., the bar's length corresponds to the magnitude of the entered value). The reference values and the graphical representation may be combined.[6635]

7.3.8-1 Minimize the Use of Irreversible Actions

The design of the HSI should minimize the use of irreversible actions for handling stored data.
Additional Information: The design of HSI should seek to eliminate irreversible actions in handling stored data. The user should be able to reverse an action with an 'Undo' capability. If an action cannot be designed to be reversible, the user interface should be designed to reduce the likelihood of unintended actuation.[6635]

7.3.8-2 Deferring Execution of Operations that are Destructive to Stored Information

Whenever practical, irreversible operations that destroy stored information should be deferred and require a separate action for their execution rather than being carried out immediately.
Additional Information: Operations that are destructive to stored information include modification and deletion of files. One way of making actions reversible is to defer their execution, giving the user an opportunity to reconsider and reverse the action. An example is the command to delete a file. Many computers place the files in a storage location where, depending upon the computer, it may be deleted automatically in the future, or remain indefinitely until the user issues a separate command. This feature allows the user to easily recover the file. Such reversible delete features may be beneficial in NPPs for recovering trend information or other data important for the safe operation of the plant.[6635]

7.3.9-1 Actuation Feedback

Soft controls should provide feedback about their operating state after activation.
Additional Information: Momentary controls, which operate only during actuation (e.g., while a button is pressed) should provide feedback during operation. Continuous-operation controls, which remain operating after actuation, should provide continuous feedback.[6635]

7.3.9-2 Notification of Automatic Mode Changes

Systems that can change mode automatically should provide feedback to make the user aware of the current mode.
Additional Information: The HSI should inform the user of the current operating mode, mode-transition points, limits on actions, and circumstances in which users must assume control. This feedback should help the user assume control without unnecessary actions and without unnecessarily disrupting plant systems and processes.[6635]

7.3.9-3 Delaying System Response

Where appropriate, systems that are sensitive to incorrect inputs should be designed to limit the rate at which these inputs can affect the process.
Additional Information: Limiting the rate at which a system responds to a user's inputs can provide opportunities for the user to detect and correct erroneous material. Methods for delaying system response include programmed limits in the control software, such as maximum ramp rates, and physical limits in plant equipment, such as orifices and dampers, to limit the rate at which processes can respond to inputs. These methods may be used when the system's slower response will not degrade plant operation or safety. These methods should be used with other methods that prevent errors and detect them.[6635]

SECTION 8: COMPUTER-BASED PROCEDURE SYSTEM

8 COMPUTER-BASED PROCEDURE SYSTEM

Procedures are typically written documents (including both text and graphic formats) that present a series of decision and action steps to be performed by plant personnel (e.g., operators and technicians) in order to accomplish a goal safely and efficiently. NPPs use procedures for a wide variety of tasks from administration to testing, and plant operation. Computer-based procedure (CBP) systems were developed to assist personnel by computerizing paper-based procedures (PBPs). Their purpose is to guide operators' actions in performing their tasks in order to increase the likelihood that the goals of the tasks would be safely achieved. CBPs define decisions to be made and actions to be taken where the goals are unambiguous and the correct or desired course of action is generally known.

While the primary focus of the characterization presented below is focused on emergency operating procedures (EOPs), it is recognized that normal and abnormal operating procedures have been important contributors to many significant events and play a significant role in plant safety. Thus, the guidelines in this section may also apply to procedures used in testing, surveillance, troubleshooting, and maintenance, when they are delivered by CBP systems.

The design review of CBP systems requires two types of guidance: procedure guidance and HSI guidance. The first type addresses the human factors aspects of procedure design and is intended to ensure that procedures are technically correct and usable. There is considerable guidance on procedure design, e.g., NUREG-0899. In addition, HFE considerations related to the development of procedures are addressed by NUREG-0711, Rev.1 (Element 8, Procedures) and NUREG-0800 (Chapter 18).

The second type, HSI guidance, covers their design characteristics. CBPs use other HSI resources, e.g., information is presented on VDUs, and operators interact with the CBP information using dialogue and navigation capabilities provided by the computer system. Many of the characteristics of CBP design are addressed by human factors guidelines in the general sections of this document. The guidelines provided in this section emphasize HSI characteristics specific to implementing procedures in computerized form, such as features that help users manage concurrent procedures or monitor continuously applicable steps in an ongoing operation.

Two aspects of CBP system design and implementation are not addressed in this section. First, the CBP guidance does not address software aspects of CBPs. For a discussion of general software development, testing, and management see NRC Regulatory Guides 1.168 through 1.173; NRC, 1977 a-f. Second, procedure maintenance and configuration control are not addressed. While procedure maintenance and configuration control are equally important for CBPs and PBPs, these two procedure systems are likely to use different mechanisms. The following are aspects to be considered for CBPs: how procedures are entered into the computer system; how their quality is verified (e.g., no typos or omissions); how errors are identified, tracked and corrected; how changes are incorporated; and how configuration control (i.e., control over revisions and modification) is provided. NUREG-0899, NUREG-0711, Rev. 1, and NUREG-0800 contain general guidance for procedure maintenance and configuration control developed for PBPs.

The following characterization identifies CBP design features and functions important to personnel performance that can be used to describe a CBP system during an HFE design review.

INFORMATION DISPLAY

The display elements for CBP systems include the following: procedure identification information; procedure steps; warnings, cautions, notes, and supplementary information; lists; procedure organization; and format and screen layout. Each is briefly described below.

Procedure Identification Information

Procedures are identifiable to the operators and maintainers through the title, procedure number, revision number, and date. Procedures also contain statements of the high-level objective and its applicability, including the procedure category, e.g., emergency or abnormal. Review guidelines for procedure identification are provided in Section 8.1.1.

Procedure Steps

Steps are the basic unit of the procedure. Each step is composed of a verb and a direct object. In general, the rules of English grammar are followed and the syntax reflects concise language that is simply stated, explicit, and consistent. Decision steps provide instructions to evaluate conditions and then to choose appropriate action(s) from a predefined set. The decisions may involve conditional logic, i.e., where actions are to be performed only if a specified set of conditions exists. Action steps identify actions to be taken; i.e., instructions to perform physical (e.g., "Depress") and mental (e.g., "Verify") actions as well as describing the objective of those actions. Some procedure steps (e.g., in EOPs) have a dual nature, with an action to be accomplished in one column and a second action if the first is not successful. Some procedure steps may also require calculations.

Implementation of procedures has a temporal flow, i.e., some steps are taken when encountered, others are performed continuously (i.e., steps of continuous applicability), while others are done based on time or process criteria. Performance of a procedure step may be supported by information, such as cautions and notes, that qualifies the actions and decisions required. Review guidelines for procedure steps are provided in Section 8.1.2.

Warnings, Cautions, Notes, and Supplementary Information

Warnings alert operators to potential hazards of their actions that may result in death or injury to workers or the public. Cautions alert operators to potential hazards of their actions that may damage machinery or equipment. Notes call attention to important supplemental information that may enhance an operator's understanding and performance of the procedure.

Procedure steps may reference supplementary material that helps the operator implement the step; it can be in the form of tables, figures, lists, text, or numeric information. Guidelines for reviewing warnings, cautions, notes, and supplementary information are provided in Section 8.1.3.

Lists

As noted in Section 1, Information Display, a list is a display containing alphanumeric strings arranged in a single column by rows. Procedures frequently use list to present groups of items such as actions, conditions, components, criteria, and systems. When lists are used in CBPs, additional consideration must be given to the grouping of items, provision of checkoff capability, and operator alerts to items that may be overlooked. Review guidelines for these aspects of CBP lists are provided in Section 8.1.4. General review guidelines for list formats are presented in Section 1.2.2.

Procedure Organization

Nuclear plant procedures are not like simple checklists in which a user starts at the top and linearly proceeds step-by-step to the end. Based on plant conditions, the operator may be required to branch from one part of a procedure to another or from one procedure to another. Thus, the organization of procedures is an important consideration. Review guidelines for procedure organization are provided in Section 8.1.5.

Format and Screen Layout

PBPs generally present the basic steps in text or flowchart format. Both of these formats may be used in CBPs. However, unlike PBPs, CBPs are viewed through the limited display area of one or more VDUs. Thus, whether the procedure format is text or flowchart, the designer must still decide whether the

procedure will be presented to the operator in a continuous, scrollable display or divided into discrete display pages.

The overall screen layout for presentation of the procedure elements refers to the

- determination as to what information should be continuously presented
- manner in which individual procedure elements are presented.

For example, the procedure title and identification information may be continuously presented at the top of the CBP screen, while the steps are shown on scrollable window. Cautions may be represented in a separate window. The CBP may also display such supporting features as bookmarks, checklists, and operator comments.

Presentation formats, such as text and flowcharts, can be enhanced by the coding capabilities of computer-based displays, e.g., color, flashing, animation, and auditory cueing. Coding is generally used to increase the salience of important information. CBPs use coding for conditions such as:

- whether procedure step logic is satisfied or not
- whether information is static or dynamic with plant state
- when a caution is in effect
- when a change in the status of a continuously monitored step has occurred

CBPs can be designed to allow operators to choose the level of detail in which procedures are presented. For example, operators may select to have less detail displayed when a procedure step is satisfied. Alternatively, an operator may choose to show all of the individual evaluations that led to the conclusion that the step is satisfied. Guidelines for reviewing procedure formatting and screen layout are provided in Section 8.1.6.

General guidelines for information display are presented in Section 1.

A significant difference between PBPs and CBPs is in the type of functions offered by CBP systems for viewing and using the procedures. Procedure functions can be organized into four cognitive categories: Monitoring and Detection, Situation Assessment, Response Planning, and Response Implementation. In terms of monitoring and detection, operators must monitor process parameters referenced by procedures. Operators must also monitor their own procedure-related actions.

The degree of situation assessment needed in using procedures is high. While EOPs enable operators to act without diagnosing the disturbance, operators must assess whether EOP entry conditions exist. Within the procedure, operators assess each decision step by comparing actual values to the procedure's reference values, evaluating whether cautions are applicable, assessing whether each step is complete or not, and tracking and remembering their path through the procedure (the procedure history), steps of continuous applicability, and steps that are time- or parameter-value dependent. This can be difficult because steps must be evaluated while others are being performed. Operators must also assess the applicability of individual steps because PBPs are generic and not context sensitive (context sensitivity is the selection of procedural information based on plant state). Finally, operators must evaluate the success of the current procedure in achieving the high-level procedure goals and the procedure's termination conditions.

Procedures were originally designed to support response planning. In the case of EOPs, for example, the procedures were intended to assist operators in responding to events by setting out the steps necessary to achieve safety goals. It relieved the operator of the burden of formulating response plans in real time. Instead, the actions necessary to restore and maintain critical safety functions were analyzed in advance by the procedure developer and supplied as a set of detailed instructions. However, operators must still evaluate whether transitions to other parts of the procedure or other procedures are warranted. At rare

times, they may have to modify a procedure when the current plant conditions render the existing procedure inapplicable.

With respect to response implementation, the operator's responses involve actions on the procedures themselves, such as making the transition from one step to the next, to other parts of the procedure, or to other procedures. Responses also include controlling equipment based on procedural guidance. CBPs may support operators' interaction both with the procedures and with plant equipment.

While PBPs support response planning, they provide little active support for monitoring, situation assessment, and response. CBPs, on the other hand, may support these cognitive functions as well; the extent to which they do so is determined by the CBP design.

Table 8.A provides an overall scheme in which the level of automation of CBPs can be organized. This table illustrates the widely varying levels of automation and functional capabilities that CBPs may possess. It also can be used to catalogue the functional capabilities of a particular system.

In the rows, the general cognitive functions (as described above) are identified along with the procedure-related activities associated with each. In the columns, four levels of automation are identified: manual, advisory, shared, and automated. The meanings of these levels of automation are

- Manual – The function is performed by the operators with no assistance from the CBP.
- Advisory – The CBP gives advice only. For example, the CBP may advise the operator that Pump A should be started, but does not perform the action.
- Shared – The CBP and the operators both perform the function. For example, a CBP system could monitor a process but be unable to access all necessary information about the system (e.g., valve position) due to lack of instrumentation. When this type of information needs to be monitored, the operator obtains the information.
- Automated – The CBP performs the function automatically without direct intervention from the operator. This may or may not involve notification to the operators of the automated actions taken.

A given level of automation is not necessarily meaningful for all functions. For example, with respect to process monitoring, it is not meaningful to have an advisory level of automation. The CBP system will either have monitoring capability or it will not. This is indicated by NA (not applicable) in the table.

A given procedure system may make no provisions for a given function. For example, a CBP may not address control of equipment in any capacity, not even manual. In such a system, equipment would be operated using the other resources of the HSI. Thus, the entire function is not applicable for that specific CBP.

Individual CBP systems differ in terms of the levels of automation they provide. To achieve these varying levels of automation, CBPs may need to provide features that go beyond those identified above as the basic procedure elements. For example, to provide for manual control of plant components, the CBP would need to include a control, e.g., a soft control, for that equipment.

Review guidelines for functional capabilities of CBPs are given for the following specific topics:

- Procedure supervision and control (in Section 8.2.1)
- Procedure monitoring and assessment (in Section 8.2.2)
- Monitoring of user actions (in Section 8.2.3)
- Planning and implementation (in Section 8.2.4).

Table 8.A Levels of automation of procedure functions

Procedure Functions	Level of Automation[1]			
	Manual	Advisory	Shared	Automatic
Monitoring and Detection				
Process parameter values		NA		
Operator actions		NA		
Situation Assessment				
Procedure entry conditions		NA		
Resolution of procedure step logic		NA		
Step status (incomplete or completed)		NA		
Procedure history		NA		
Context sensitive step presentation		NA		
Assessment of continuous, time, and parameter steps		NA		
Assessment of cautions		NA		
High-level goal attainment and procedure exit conditions		NA		
Response Planning				
Selection of next step or procedure				
Procedure modification based on current situation				
Response Implementation				
Transition from one step to the next				
Transition to other parts of procedure of other procedures				
Control of plant equipment				

[1] NA means "not applicable." For a given CBP system, a level of automation may not be applicable or an entire function may not be applicable.

USER-SYSTEM INTERACTION

CBP systems have special requirements to support the operator's interaction with the system, procedure maintenance and configuration control. CBP-specific interface management considerations (such navigation aids) include the need to make transitions between procedure steps and between different procedures. In addition, procedure use can be supported by automated facilities that monitor and record the operator's actions and provide support for interface management tasks when needed. User-system interactions specifically addressed by the review guidelines include: path monitoring (see Section 8.3.1), navigation (see Section 8.3.2), and help (see Section 8.3.3). General guidelines for user-system interaction are found in Section 2.

The types of devices used to operate the CBP system should be identified, including computer-based input devices (e.g., alphanumeric keyboards, trackballs, mice, and touch screens), conventional controls, and soft controls, as described in Sections 3 and 7. Guidelines pertaining to the hardware used to implement computer-based procedures are given in Section 8.4.

BACKUP CAPABILITIES

CBPs can fail or malfunction. When important operations cannot be suspended or put off while the system is repaired, backup to the CBP is necessary. In the case of EOPs, a delay in operations in the event of a failure is not acceptable, therefore, some form of procedure backup is warranted. Review guidelines for procedure backups systems are provided in Section 8.5.

INTEGRATION WITH OTHER HSI ELEMENTS

The integration of the CBP with other resources of the HSI must be considered. Depending on the level of automation, as shown in Table 8.A, CBP systems will require varying types of interfacing with the remainder of the HSI. The consistency and compatibility of the CBP with the rest of the HSI can affect operator performance. Thus, important considerations in the CBP review include the degree to which (1) the display of plant variables in the CBP is compatible with the normal monitoring displays, (2) compatible coding schemes are used, and (3) control implementation modes of the CBP are consistent with the rest of the HSI (e.g., with modes of automated control systems). Guidelines for reviewing the integration of CBP with other HSI components are provided in Section 8.6.

In the course of developing the guidance for CBPs, several considerations were identified that are important to crew performance and safety, but for which the technical basis was insufficient to develop specific HFE guidelines. These aspects of computer-based procedure design should be addressed on a case-by-case basis using the design process considerations presented in Appendix B3.

8 COMPUTER-BASED PROCEDURE SYSTEM
8.1 Information Display
8.1.1 Procedure Identification

8.1.1-1 Procedure Title and Identification Information
Each procedure should contain identifying information including title, procedure number, revision number, date, and organizational approval.
Additional Information: This information helps the user establish the appropriate context for using the procedure.[6634]

8.1.1-2 High-Level Goals
Each procedure should state its high-level goals and applicability, including its procedure category, e.g., emergency or abnormal.
Additional Information: Information should be given allowing the user to understand the purpose or goal of a series of steps and supporting the user's assessment of the success of the procedure in achieving its safety goal.[6634]

8 COMPUTER-BASED PROCEDURE SYSTEM
8.1 Information Display
8.1.2 Basic Steps

8.1.2-1 Concise Steps
Procedure steps should be concise.
Additional Information: Steps should be designed to communicate information clearly and unambiguously so that they can be easily understood and interpreted without error.[6634]

8.1.2-2 Short Sentences
Procedure steps should be written as short sentences.[6634]

8.1.2-3 Active Voice
Procedure steps should be written in active voice.[6634]

8.1.2-4 Positive Commands
Procedure steps should be written as positive commands.[6634]

8.1.2-5 Simple Wording
Short, simple words from standard American English should be used.[6634]

8.1.2-6 Standard Punctuation
Punctuation should conform to standard American English usage.[6634]

8.1.2-7 Consistent Word References
Words, phrases, and equipment names and numbers should be used consistently within and among procedures, drawings, other HSIs, and equipment labels.[6634]

8.1.2-8 Abbreviations and Acronyms
Abbreviations and acronyms should be used consistently and limited to those well known to the users.[6634]

8.1.2-9 Units of Measures
Numerical information should include units of measure.[6634]

8.1.2-10 Numerical Precision
Numbers should be specified at the appropriate precision.[6634]

8.1.2-11 Number Ranges
Ranges of numbers should be specified, rather than error bands.[6634]

8.1.2-12 Use Arabic Numerals
Arabic numerals should be used.[6634]

8.1.2-13 Spelled Numbers
Numbers that are spelled out should be consistently spelled under the same conditions.[6634]

8.1.2-14 Presentation of Conditional Steps
Conditional steps should be shown in traditional text formats following the guidance in Appendix B of NUREG-0899.[6634]

8.1.2-15 Specification of Preconditions for Steps
The procedure should specify any conditions that must be met before an action can be undertaken.

8 COMPUTER-BASED PROCEDURE SYSTEM
8.1 Information Display
8.1.2 Basic Steps

Additional Information: Information about preconditions in the procedure should be located so that users read the information before acting. Information given in other locations may be overlooked, or require additional actions to retrieve it, which may be distracting and time consuming. Further, if conditions are implied, users may easily miss or misinterpret them.[6634]

8.1.3-1 Parallel Display with Procedure Step

The warnings and cautions applicable to a single step (or to a series of steps) should be displayed when the step(s) is on the screen.

Additional Information: Displaying warnings and cautions at the same time as their associated procedure steps will help ensure that users read the information when they evaluate the step. Information provided elsewhere may be overlooked, or may require retrieval by distracting and time-consuming actions.[6634]

8.1.3-2 Position Before Action Steps

Warnings, cautions, and notes should be presented so that they will be read before the applicable action steps.

Additional Information: Displaying warnings, cautions, and notes before action steps will help ensure that users will read the information before taking action. Information provided in other places may be overlooked or may be distracting and time consuming to retrieve.[6634]

8.1.3-3 Action References

Warnings, cautions, and notes should not include implied or actual action steps.

Additional Information: Actions should be specified in procedure steps only.[6634]

8.1.3-4 Distinction from Other Procedure Elements

Warnings, cautions, and notes should be uniquely presented, so that they are easily distinguished from each other and from other display elements.[6634]

8.1.3-5 Supplementary Information

All supplementary information (such as tables and figures) required for a procedure step and available to the CBP should be shown on the screen concurrently with the step, or on another easily viewed display.[6634]

8.1.4-1 Appropriate Application of Lists

Groups of three or more related items (e.g., actions, conditions, components, criteria, systems) should be presented as a list.[6634]

8.1.4-2 Distinction from Other Procedure Elements

Formatting should be used to differentiate items in a list from other procedure elements.[6634]

8.1.4-3 Identification of Precedence

The presence or absence of precedence among items in lists should be indicated.
Additional Information: It should be clear to users whether some items take precedence over others.[6634]

8.1.4-4 List Overviews

Overviews should introduce each list.
Additional Information: An example of an overview is "Ensure that all of the following tests were completed:".[6634]

8.1.4-5 Assuring Users' Attention

The method for assuring that each item in a list has received the users' attention should be consistent.
Additional Information: For example, an electronic checklist may be provided so that users can check off items they have attended to. If users proceed before all items are checked off, the CBP may alert them to the unchecked items.[6634]

8 COMPUTER-BASED PROCEDURE SYSTEM
8.1 Information Display
8.1.5 Organization of Procedures

8.1.5-1 Hierarchical, Logical Organization
The procedures should be organized in a hierarchical, logical, consistent manner.
Additional Information: Organization will make it easier for users to see the relationships among procedures.[6634]

8.1.5-2 Organization of Procedure Steps
Each procedure should be organized into sections of related steps.[6634]

8.1.6-1 Organization Format of Procedures

The procedure's format should reflect its organization.
Additional Information: Formatting methods to indicate the organization of a procedure may include the use of headings or colors to distinguish parts of the procedure.[6634]

8.1.6-2 Format of Procedures

A consistent format should be used to display procedures.
Additional Information: Whether procedures are presented in text, flowchart, or otherwise, a consistent approach across procedures will facilitate using and moving between multiple procedures.[6634]

8.1.6-3 Partitioning Procedures

A consistent approach to partitioning procedures should be used.
Additional Information: Partitioning refers to how a procedure is organized to be displayed on the VDU screen. For example, it may be divided into distinct pages, and users would navigate from one to the next. Alternatively, it may be presented as one continuous display that the user scrolls.[6634]

8.1.6-4 Organization of Display Screen

Each display screen should locate information and HSI features consistently.
Additional Information: When the information and features, such as procedure steps, controls, and navigation aids are consistently located, users' performance improves because expectations can guide the search for information, and reduce the time and workload associated with finding it.[6634]

8.1.6-5 Continuously Presented Procedure Information

The procedure's title and identification should be continuously presented.
Additional Information: This information helps set the context for the overall procedure within which its steps are interpreted. It is especially important when more than one procedure can be open at one time.[6634]

8.1.6-6 Continuously Presented Status of High-Level Goals

The status of high-level procedure goals should be continuously presented.
Additional Information: This information helps set the overall context in which procedure steps are interpreted. Continuous presentation of high-level goal status, such as status of critical safety functions, will facilitate users' awareness of them, particularly when more than one procedure is open simultaneously.[6634]

8 COMPUTER-BASED PROCEDURE SYSTEM
8.2 Functional Capabilities
8.2.1 Procedure Supervision and Control

8.2.1-1 Users' Control of Procedure Path
Users should be in control of the sequence of steps that are followed.
Additional Information: Most procedures have specifically defined steps that have to be performed sequentially, and others that can be varied at the user's discretion; CBPs should identify which one is applicable. However, users should have the flexibility to move around within the procedure, so that they can check and make verifications.[6634]

8.2.1-2 Users' Control of Pace of Procedures
Users should be in control of the pace at which procedure steps are followed.
Additional Information: Users need to maintain situation awareness of procedure-related decisions. To accomplish this, they must be in control of the pace at which steps are followed.[6634]

8.2.1-3 Understandability of Analysis of Procedure Steps
The methods by which CBPs analyze procedure steps should be consistent with the methods by which users analyze steps in procedure logic steps, so that the results are understandable.
Additional Information: Users must be able to judge the acceptability of the CBP's advice and recommendations.[6634]

8.2.1-4 Users' Verification of CBP Information
The users should be able to verify the system's assessment of plant status.
Additional Information: This verification includes process parameters, equipment status, analysis of procedure step logic, and evaluation of cautions. Any analysis done by the CBP should be accessible to users for review.[6634]

8.2.1-5 Users' Override of CBP
Users should be able to override any CBP information, calculation, evaluation, or assessment.[6634]

8.2.2-1 Automatic Identification of Procedures

The CBP should alert users when entry conditions to a procedure are satisfied.
Additional Information: This capability will help users determine the appropriate procedures for the existing plant situation.[6634]

8.2.2-2 Automatic Monitoring of Plant Parameters and Equipment Status

The CBP should automatically provide accurate and valid information on the values of parameters and status of equipment, when they are available to the system.
Additional Information: It should be clear to users what specific information is used as the source of these actual values and states.[6634]

8.2.2-3 Frequent Monitoring

The CBP should frequently monitor procedure-defined parameters.
Additional Information: Frequent monitoring, such as twice a second, promptly notifies users of status changes.[6634]

8.2.2-4 Automatic Calculation of Procedure-Referenced Values

The system should undertake calculations, such as subcooling margin, that are required when using procedures.[6634]

8.2.2-5 Analysis of Step Logic

The CBP should evaluate the logic of each procedure step and show the results to the user.
Additional Information: Procedure steps often contain logical relationships; for example, actions are to be performed if an identified set of conditions exists. The analysis of these logical relationships must be carefully verified to avoid underspecification. This occurs when the logic used to resolve a procedure step is too simplified, and does not address all of the considerations that users do when evaluating the step.[6634]

8.2.2-6 Continuous Analysis of Non-Current Step Logic

Steps of continuous applicability, time-dependent steps, and process-dependent steps should be monitored by the CBP and the user should be alerted when conditions in those steps become effective.
Additional Information: The analysis must be carefully verified to avoid underspecifying its logic. The alert should not automatically remove the user's current display. Instead, it should be presented as a supplemental display or as an alert.[6634]

8.2.2-7 Coding of Logical Analysis

When procedure's step logic indicates a violation of the step, the information should be coded to make that step more salient to users.[6634]

8.2.2-8 Analysis of Cautions

The conditions described in cautions should be automatically monitored by the CBP system, and the user should be alerted when the caution is in effect.
Additional Information: Evaluating cautions and alerting users to their applicability will ensure that users will read the information at the appropriate time, and reduce the chance that it may be overlooked. The conditions for cautions must be established with care such that the logic is not underspecified.[6634]

8.2.2-9 Coding Applicable Cautions

CBPs should use coding to indicate when a caution is in effect.

Additional Information: Coding techniques, such as color coding, may be used to enhance the salience of important information.[6634]

8.2.2-10 Users' Acknowledgment of Procedure Analyses
Users should make some form of acknowledgment of procedure steps and recommendations for terminations and transitions.
Additional Information: As an example, users may acknowledge that a step is satisfied by depressing the "Return" key, or clicking on an onscreen acceptance button. Such acknowledgment helps the users to maintain awareness of the procedure's status.[6634]

8.2.2-11 Identification of User Input Requirements
The CBP should provide users with clear, timely indications when they need to input any information not available to it.
Additional Information: CBPs may rely on users to process parameter values, equipment status (such as whether a valve is open or closed), analyses of logic steps where users' judgment is involved, or to assess any conditions not within the capability of the CBP.[6634]

8.2.2-12 Adjustable Level of Detail
Users should be able to choose the level of detail with which procedures are presented.
Additional Information: While plant practices on using procedures may be specified by management, there may be flexibility in the level of detail that can be provided. For example, users may want less detail when a procedure step is satisfied. Alternatively, a user may choose to see all of the individual evaluations leading to the conclusion that the step was satisfied. This must be done with care so that it does not affect the interpretation of procedure information. In addition, users should be trained as to how and when to vary levels of detail.[6634]

8.2.2-13 Context-Specific Guidance
Procedure guidance should be context sensitive where possible.
Additional Information: For example, the CBP system should not indicate an action to start a pump when it can determine that the pump is already running.[6634]

8.2.2-14 Assessment of High-Level Goal Status
The CBP should continuously assess and present the status of higher-level safety goals, such as critical safety functions, and alert the user to any challenges.[6634]

8.2.2-15 Assessment of Conditions Terminating a Procedure
The CBP should automatically identify when conditions are met for transitioning or exiting from a procedure.
Additional Information: This capability will help users determine when procedures they are using are no longer appropriate for the existing situation.[6634]

8.2.3-1 Monitoring Users

User responses to procedures should be monitored and recorded by the CBP.

Additional Information: Monitoring information on users' input to information requested by the procedure and their subsequent actions is necessary if the CBP is to properly assess appropriate procedural pathways.[6634]

8.2.3-2 Alert Users to Deviations in Procedure

Users should be alerted if their input is incorrect, or when their actions are not consistent with CBP evaluations.

Additional Information: The alert should be advisory and not discourage the user's actions. This feature must be supported with training, so users are not reluctant to go against the CBP's evaluations.[6634]

8.2.4-1 Display of Action Status

The status of procedure-related actions should be displayed by the CBP.[6634]

8.2.4-2 Timing of Procedures

The CBP's timing, such as status update rates, screen changes, and navigation features, should be consistent with the time demands of the task.[6634]

8 COMPUTER-BASED PROCEDURE SYSTEM
8.3 User-System Interaction
8.3.1 Path Monitoring

8.3.1-1 Monitoring Step Status
There should be an indication of whether or not a step was completed.
Additional Information: The indication can be manual or automatic, depending on whether the CBP has the specific criteria and information to determine this.[6634]

8.3.1-2 Alert User to Incomplete Procedure Steps
Users should be alerted to incomplete procedure steps.
Additional Information: The alert should be advisory and not discourage the crew's actions.[6634]

8.3.1-3 Coding Current Location
The current procedure step(s) should be indicated.[6634]

8.3.1-4 Automatic Path Monitoring
The pathway taken through procedures should be stored and made available to users.
Additional Information: A history should be maintained and available for display on request. Step completion can be time stamped to facilitate post-hoc incident analysis.[6634]

8.3.1-5 Indication of Multiple Active Procedures
The user should be informed when multiple procedures or multiple procedure steps are to be followed concurrently. A list of all currently active procedures should be available.
Additional Information: It may be helpful for the list of active procedures to include start and stop times for the procedures in use.[6634]

8.3.2-1 Flexible Navigation

Navigation support should allow users to freely and easily move between procedure steps, to other parts of the same procedure, and to other procedures.
Additional Information: Users should not be forced to access procedures in a fixed sequence of the procedure nor should their access to supporting information be limited. (See also the additional information for Guideline 8.2.1-1.)[6634]

8.3.2-2 Support Parallel Access to Information

The CBP should have the ability to access more than one piece of information at once.[6634]

8.3.2-3 Navigational Links to Related Information

Navigational links to cross-referenced information and to notes, cautions, warnings, reference material, and communication and help facilities should be provided.
Additional Information: Techniques such as hyperlinks can expedite navigation to information material cross-referenced in a procedure or its supporting material.[6634]

8.3.2-4 Access to Contingency Actions

Users should be able to easily access appropriate contingency actions.[6634]

8.3.3-1 Explanation Facilities

CBPs should have facilities to enable the user to determine how CBP functions are performed.
Additional Information: When CBPs support users' decision making, such as offering advice on how to select procedures, analyze step logic or follow procedure paths, users should be able to query the basis for the advice. Cooperative dialogue enables the user to better understand and utilize the system.[6634]

8.3.3-2 Help Facilities

Help for performing procedure specified activities should be provided.[6634]

8.3.3-3 Note Taking

There should be a way for users to record their notes and comments in the CBP.[6634]

8.4-1 Number of VDUs

The number of VDUs on which CBP information is displayed should be sufficient to provide all the procedure-related information needed for a procedure step, including cautions and reference material.[6634]

8.5-1 Paper-Based Procedure Availability

PBPs should be available in the event of CBP failure.[6634]

8.5-2 Consistency of PBPs and CBPs

The content and presentation of procedure information in PBPs and CBPs should be consistent.
Additional Information: Smooth transfer between CBPs and PBPs and vice versa will be facilitated by the degree to which their formatting is consistent; this also will facilitate training in procedure use.[6634]

8.5-3 Support for Transfer to PBPs

Upon transfer to PBPs, a means should be provided to support the user's determination of currently open procedures, location in the procedures, completed and not completed steps, and currently monitored steps.
Additional Information: When the CBP is lost, it may be difficult for users to reconstruct this information from memory. Therefore, the user should be supported in making a safe, easy transition. For example, a CBP system might automatically print out a status sheet with this information once every minute so that if it fails, the user can retrieve the latest sheet and use it to establish the crew's tasks for using PBPs.[6634]

8.6-1 Consistency with HSI

The detailed CBP design should be fully consistent with the rest of the HSI.

Additional Information: HSI features for format and functionality (such as labeling, acronyms, dialog conventions, use of colors, and input devices) should be consistent between the CBP and other HSI components. Consistency may be a special consideration when reviewing 'off-the-shelf' systems.[6634]

SECTION 9: COMPUTERIZED OPERATOR SUPPORT SYSTEM

9 COMPUTERIZED OPERATOR SUPPORT SYSTEM

Computerized operator support systems (COSSs) use computer technology to support operators in cognitive activities such as situation assessment and response planning. Based on their analyses, COSSs may provide recommendations or warnings to personnel. Example applications include: fault detection and diagnosis, safety function monitoring, plant performance monitoring, core monitoring, maintenance advising, and operator support for plant control. While the particular focus of the guidelines is on systems that support operator performance, it is also relevant to aids for others, such as maintenance personnel.

Only general guidelines for COSSs are available, and they are given in Section 9.1. Aspects of COSSs addressed in that section include alerts provided to the user regarding the availability of critical information or to notify the user that a user when a problem or situation is beyond the capabilities of the COSS; strategic planning capabilities (i.e., for evaluating the user's plans); user input to problem solving capabilities; capabilities for explaining rules, knowledge bases, problem solutions and for indicating the certainty in the correctness of analyses; and capabilities for recalling previously evoked rules and the corresponding events.

9 COMPUTERIZED OPERATOR SUPPORT SYSTEM

9.1 General

9.1-1 Consistency with User Task Requirements

The support provided by the COSS should be consistent in content and format with the cognitive strategies and mental models employed by the user.
Additional Information: Users should be able to understand the analysis logic employed by the COSS. This supports user acceptance and enables users to supervise the COSS in order to properly evaluate and utilize its output.[5908]

9.1-2 Consistency with General HSI

The COSS should be fully integrated with and consistent with the rest of the HSI.
Additional Information: The COSS's depiction of the system should utilize the same nomenclature, abbreviations, acronyms, symbology, iconic representations, and coding techniques as the general information display system.[5908]

9.1-3 Interaction With Ongoing Tasks

Use of the COSS should not require canceling ongoing tasks.[5908]

9.1-4 Critical Information Alert

If critical information becomes available during COSS utilization, the system should alert the user to the critical information.[5908]

9.1-5 Minimize Querying of User

COSS querying of the user for information should be minimized.[5908]

9.1-6 Dialogue Sequencing Flexibility

The user-COSS dialogue should be flexible in terms of the type and sequencing of user input the COSS will accept.[5908]

9.1-7 Strategy Planning Capability

The COSS should provide the capability to plan a strategy for addressing a problem.
Additional Information: The capability provided by the COSS should include: planning aids (such as time lines and worksheets); an evaluation function which assesses the adequacy of the user's plan and recommends revisions where necessary; the ability to form, state, and test hypotheses in a manner consistent with the user's plan; and the capacity to store and recall plans.[5908]

9.1-8 User Supported Strategy Selection

When the COSS is capable of a range of problem-solving strategies, it should be capable of accepting direction from the user in terms of which strategy to employ.[5908]

9.1-9 Simulation Mode Command and Identification

If the COSS has a simulation mode, entering the simulation mode should require an explicit command and result in a distinguishable change in system output.
Additional Information: A blinking "Simulation Mode" symbol, for example, can be used to clearly distinguish simulation from other operational modes.[5908]

9.1-10 Explanation Capability

The COSS should be capable of interactively explaining its rules, knowledge base, and problem solutions at any point during a user-COSS transaction.

Additional Information: Rules should be represented explicitly in the knowledge base and encoded such that they are accessible to the explanation facility and can be translated for human understanding. The COSS should respond to user requests to clarify questions and assertions. At the request of the user, the system should be capable of displaying rule-based and descriptive explanations.[5908]

9.1-11 User Control of Explanation Detail
The level of detail of information presented as part of an explanation or justification should be under the control of the user.[5908]

9.1-12 Indication of Certainty
The COSS should represent its certainty in the correctness of analyses and provide the rationale underlying the certainty estimation.
Additional Information: Certainty factors, for example, can be represented as a decimal number from -1 to +1, with -1 indicating absolute certainty that a fact is not true, and +1 indicating absolute certainty that a fact is true.[5908]

9.1-13 Inadequate Knowledge Alert
The COSS should alert the user when a problem or situation is beyond its capabilities.
Additional Information: Rule exceptions should be explicitly contained in the knowledge base and available to the user as part of the explanation facility. Where possible, the COSS should inform the user as to what additional knowledge or rules are required to complete the transaction.[5908]

9.1-14 Graphic Representation of Rules
The COSS should be able to graphically represent system relationships, its rules network, and reasoning process.[5908]

9.1-15 Highlight of Status Changes After COSS Utilization
At the completion of a user-COSS session, the COSS should update and highlight changes in the status of important system information.
Additional Information: User acknowledgement may be requested for important changes.[5908]

9.1-16 Post Hoc Rule-Event Recall
The COSS explanation facility should have the capability to recall each invoked rule and associate it with a specific event (i.e., question or conclusion) to explain the rationale for the event.
Additional Information: The COSS should automatically record all rules invoked during an analysis.[5908]

9.1-17 Rapid Interaction Retrieval
The system should permit rapid retrieval of previous exchanges between the user and the COSS.[5908]

9.1-18 Hardcopy of COSS Utilization
The user should be capable of requesting a hardcopy of data including screen displays (text or graphics), data employed during a consultation, summaries of consultations, lists of rules/facts invoked during a consultation, and summaries of hypotheses tested.[5908]

SECTION 10: COMMUNICATION SYSTEM

10 COMMUNICATION SYSTEM

COMMUNICATION SYSTEM FUNCTIONS

Crew communication is essential to performance, including communication between personnel in the main control room, between the main control room and local sites within the plant, and across sites within the plant. The communication system supports these activities. The broad variety of communication media that may be employed can be generally categorized as speech-based and computer-based communications, as described below.

SPEECH-BASED COMMUNICATION

Within the main control room, personnel generally communicate directly via unaided speech. An exception may be when personnel are separated by a large distance, such as when an operator at a main control panel must communicate with another operator located at a back panel or an auxiliary area in the control room. In such cases, a communication device may be used. In addition, communication devices are often used to communicate between the main control room and local sites within the plant, and across sites within the plant. General review guidelines for speech-based communication systems are provided in Section 10.2.1. Varieties of communication devices that may be used to support speech-based communication are described below.

Conventional telephone systems

Earphones and microphones may have variety of configurations including handsets, headsets, and surface-mounted (i.e., as in a speaker phone configuration). Headsets may cover one ear (monaural) or two (binaural). A telephone system may interface with an announcing (public address) system. Review guidelines for conventional-powered telephone systems are provided in Section 10.2.2.

Sound-powered telephone systems

Sound-powered telephone systems do not require a separate electrical power supply to transmit signals; the force of the user's speech upon the mouthpiece generates small electrical impulses, which are transmitted as a signal. Therefore, they may be beneficial for situations in which electricity is not available. Sound-powered telephones are connected to transmission wires and may be made portable by providing jacks at locations where the phone is to be used. If a sound-powered telephone system has multiple connections, it may be implemented as a "party line" unless a switching function is implemented. The switching function may be manual, unless supplemental power is provided for this function. Sound-powered telephones are often implemented with headsets. Sound-powered telephone systems require supplemental electrical power (e.g., a hand-operated crank) to energize a ringing function. In addition, the sound-powered transmitter may have an interface with a paging system so that the desired party can be called to the line. Review guidelines for sound-powered telephone systems are provided in Section 10.2.3.

Portable radio transceivers

Portable radio transceivers include battery-powered communication devices that transmit messages through the airways rather than through wires. Review guidelines are provided in Section 10.2.4.

Announcing (public address) systems

These systems generally feature loudspeakers installed in predetermined locations. In some installations, microphone input may be provided through a telephone system connection. This allows users to access the announcing system from multiple locations. Some announcing systems provide two-way

communication (e.g., via distributed microphones) allowing them to function as point-to-point intercom systems in addition to being public address systems. Review guidelines are provided in Section 10.2.5.

Fixed-base UHF transceivers

Like portable radio transceivers, fixed-base UHF transceivers transmit messages through the airways. Fixed-base UHF transceivers are not portable but may have greater frequency response than portable radio transceivers. Review guidelines are provided in Section 10.2.6.

Point-to-point intercom systems

These systems provide two-way communications via a distributed set of microphones and speakers. Review guidelines for this topic are also found in Section 10.2.6.

Emergency Communications

Emergency (i.e., backup) communications systems support internal and external communications during abnormal conditions. Review guidelines for emergency communication systems are provided in Section 10.2.7.

COMPUTER-BASED COMMUNICATION

Because of continued advances in computer-based technologies, many types of computer-based communications systems are possible; general guidelines for such systems are given in Section 10.3.1. The systems use computers to support personnel in preparing, sending, and receiving messages; specific guidelines related to these functions are given in Section 10.3.2, 10.3.3, and 10.3.4, respectively. Computer-based communication systems may allow messages to be prepared, stored, and received in a variety of formats. For example, voice mail systems handle messages primarily in verbal format, while electronic mail may handle messages in text, graphic, and auditory forms. In addition, computer-based communication systems can initiate messages automatically, such as by sending a text or verbal message to a recipient when a particular condition occurs.

Computer-based communication systems also have the following are characteristics:

- Purpose – The purpose provides a basis for identifying and assessing the relevance and appropriateness of the functional capabilities and design features of a computer-based communication system. Some considerations to be addressed include the intended users of the system, the types of communication, the locations to be covered, and the conditions under which the system is to be used (e.g., normal operations versus emergencies).
- Functional Capabilities – Functional capabilities refers to the functions performed by the computer-based communication system. Specific considerations include: support for message preparation (e.g., data entry, formatting), message sending (e.g., address directories, message priority, reply capabilities), and message receipt (e.g., message filtering and selection; time stamps; storage and retrieval; methods of receipt such as via file, display, and printer; and annotation of received messages).
- Information Display – Information display, as described in Section 1, refers to the way that information is organized and presented to the user in terms of display elements, formats, and networks. It also includes the data quality and update characteristics and characteristics of the display devices. For an HFE design review, these characteristics should be identified for the computer-based communication system. General guidelines for information display are presented Section 1.
- User-System Interaction – User-system interaction refers to the types of interaction provided between the user and the computer-based communication system. It includes input formats, cursor

characteristics, system response, the management of displays, the management of information, error response, and system security. General guidelines for user-system interaction are found in Section 2.

- Controls – The types of devices used to interact with the computer-based communication system should be identified, including computer-based input devices, conventional controls, and soft controls. General guidelines for computer-based input devices and conventional controls are found in Section 3. General guidelines for soft controls are found in Section 7.
- Backup Capabilities – If the failure or loss of availability of the computer-based communication system may affect operator tasks that are important to plant safety, then backup systems and capabilities should be included in the characterization.
- Integration with Other HSI Components – The consistency and compatibility of the computer-based communication system with the rest of the HSI can affect operator performance. Thus, important review considerations include the degree to which controls and displays of the computer-based communication system are compatible with other controls and displays of the HSI. This extends to such considerations as display formats, coding schemes, and methods of operation.

10 COMMUNICATION SYSTEM

10.1 General Communication Guidelines

10.1-1 Accessibility

Communications functions and/or equipment should be accessible from the user's normal working location.

Additional Information: Where communication requirements necessitate the use of several handsets, the accessibility of their standby locations should be determined by operational priority, i.e., the most frequently or urgently needed handset should be the most accessible. The handsets may also be color coded.[5908]

10.1-2 Instructions

Instructions should be provided for use of each communication system, including suggested alternatives if a system becomes inoperable.[0700]

10.1-3 Outgoing Emergency Messages

Priority procedures should be established for the transmission of emergency messages from the control room by any of the communication systems.[0700]

10.1-4 Incoming Emergency Messages

Procedures should be established for handling communications during an emergency, and these procedures must be known by all users.[0700]

10.1-5 Minimal User Actions

Communication systems should be designed to minimize required user actions.

Additional Information: In some applications, for example, software logic might prepare and transmit messages automatically, derived from data already stored in the computer; software logic might provide automatic reformatting of stored data for transmission, where format change is required; and interface software might provide automatic insertion into messages of standard header information, and distribution lists.[5908]

10.1-6 Communication Flexibility

Users should have flexibility in communications methods.

Additional Information: Where communications are critical, users should not be precluded from communicating with other plant personnel by the loss of one method.[5908]

10 COMMUNICATION SYSTEM
10.2 Speech-Based Communication
10.2.1 General Requirements

10.2.1-1 Comfort
Communication equipment to be worn should be designed to preclude discomfort.
Additional Information: Supporting structures for earpieces should not impose discomforts of weight, concentrated pressures, or metal contact with the skin.[5908, 0700]

10.2.1-2 Hands-Free Operation
Communication equipment should be designed to permit hands-free operation.
Additional Information: Hands-free operation may have to be compromised to accommodate a push-to-talk switch in anticipation of possible use in areas of high ambient noise.[5908, 0700]

10.2.1-3 Frequency Response
Microphones and associated amplification equipment should be designed to respond optimally to that part of the speech spectrum most essential to speech intelligibility (i.e., 200 to 6,100 Hz).
Additional Information: Where system engineering necessitates speech-transmission dynamic range bandwidths narrower than 200 to 6,100 Hz, the minimum acceptable frequency range is 250 to 4,000 Hz. The system should achieve at least standard telephone sound quality.[5908, 0700]

10.2.1-4 Microphone Dynamic Range
The dynamic range of a microphone used with a selected amplifier should be great enough to admit variations in signal input of at least 50 dB.[5908]

10.2.1-5 Microphone Noise Shields
When ambient noise is high (85 dB(A) or greater), the microphone should be put in a noise shield.
Additional Information: Noise shields should be designed to meet the following requirements:
- Volume of at least 15.25 cubic inches (250 cubic centimeters) to permit a pressure gradient microphone to function normally
- A good seal against the face with the pressure of the hand or tension of straps
- A hole or combination of holes covering a total area of 0.1 in (65 mm) in the shield to prevent pressure buildup
- Prevention of a standing wave pattern by shape or by use of sound absorbing material
- No impediment to voice effort, mouth or jaw movement, or breathing [5908]

10.2.1-6 Noise-Canceling Microphones
In very loud, low frequency noise environments (100 dB overall), noise-canceling microphones should be used.
Additional Information: The noise-canceling microphones should be capable of effecting an improvement of not less than 10 dB peak speech-to-root-mean-square-noise ratio, as compared with non-noise-canceling microphones of equivalent transmission characteristics.[5908]

10.2.1-7 Signal Processing
If the environment or the speech transmission equipment is such that the signal-to-noise ratio of the speech is degraded, signal-processing techniques should be used to maintain speech intelligibility.

Additional Information: Where speech signals are to be transmitted over channels showing less than 15 dB peak speech-to-root-mean-square-noise ratios, peak clipping of 12 to 20 dB may be employed at system input. If necessary, clipping may be preceded by frequency pre-emphasis. The frequency pre-emphasis should have a positive slope frequency characteristic no greater than 18 dB per octave from 140 to 1,500 Hz, and no greater than 9 dB per octave over the frequency range 1,500 to 4,800 Hz, when no clipping is used. When transmission equipment employs pre-emphasis and peak clipping is not used, reception equipment should employ frequency de-emphasis of characteristics complementary to those of pre-emphasis only if it improves intelligibility. Frequency de-emphasis should be a negative-slope frequency response not greater than 9 dB per octave over the frequency range 140 to 4,800 Hz.[5908]

10.2.1-8 Speaker Frequency Range
Loudspeakers, earpieces, and headphone elements should respond uniformly (plus or minus 5 dB) over the range 100 to 4,800 Hz.
Additional Information: Headphones and loudspeakers are subject to the same frequency response restrictions as microphones and transmission equipment.[5908]

10.2.1-9 Binaural Headsets For High Noise Environments
If listeners will be working in high ambient noise (85 dB(A) or above), binaural headsets should be provided rather than monaural headsets.
Additional Information: Unless operational requirements dictate otherwise, binaural headsets should be wired so that the sound reaches the two ears in opposing phases. Their attenuation qualities should be capable of reducing the ambient noise level to less than 85 dB(A). Provisions should be incorporated to furnish the same protection to those who wear glasses.[5908, 0700]

10.2.1-10 Loudspeakers for Multi-Channel Monitoring
When several channels are to be monitored simultaneously by means of loudspeakers, the speakers should be mounted at least 10 degrees apart in the horizontal plane frontal quadrant, ranging radially from 45 degrees left to 45 degrees right of the user's normal forward facing position.
Additional Information: When additional channel differentiation is required, apparent lateral separation should be enhanced by applying low-pass filtering (frequency cutoff, Fc = 1,800 Hz) to signals fed to loudspeakers on one side of the central user position. If there are three channels involved, one channel should be left unfiltered, a high pass filter with 1,000 Hz cutoff should be provided in the second channel, and a low-pass filter with 2,500 Hz cutoff should be provided in the third channel. A visual signal should be provided to show which channel is in use.[5908]

10.2.1-11 Volume Controls
Accessible volume or gain controls should be provided for each communication receiving channel (e.g., loudspeakers or headphones) with sufficient electrical power to drive sound pressure level to at least 100 dB overall when using two earphones.
Additional Information: The minimum setting of the volume control should be limited to an audible level; i.e., it should not be possible to inadvertently disable the system with the volume control. While separation of power (on-off) and volume control adjustment functions into separate controls is preferred, should conditions justify their combination, a noticeable detent position should be provided between the OFF position and the lower end of the continuous range of volume adjustment. When combined power and volume controls are used, the OFF position should be labeled. Speaker volume should be adjusted to ensure that speaker communications will not prevent detection of other audio signals, e.g., alarms.[5908, 0700]

10.2.1-12 Squelch Control

When communication channels are to be continuously monitored, each channel should be provided with a signal-activated switching device (squelch control) to suppress channel noise during no-signal periods.
Additional Information: A manually operated on-off switch should be provided to deactivate the squelch when receiving weak signals.[5908]

10.2.1-13 Periodic Maintenance Tests

Periodic tests should be performed on all communication systems to ensure that messages remain intelligible under changes in ambient noise levels that may have occurred since the last check.[0700]

10.2.2-1 Handset Size and Shape
The size and shape of handsets should be compatible with user's hand size and mouth-ear distance (standard telephone dimensions are acceptable).[0700]

10.2.2-2 Handset Design
Handset earpieces should maintain firm ear contact while the transmitter is positioned in front of the mouth.[0700]

10.2.2-3 Retractable Handset Cords
Cords should be of nonkink or self-retracting type.[0700]

10.2.2-4 Handset Cord Length
Cords should be of sufficient length to permit reasonable user mobility.[0700]

10.2.2-5 Handset Cord Position
Cords should be positioned so as to avoid entangling critical controls or endangering passing traffic.[0700]

10.2.2-6 Handset Cradles
Vertically mounted handset cradles should be designed and located to prevent the handset from being knocked out of the cradle by passing traffic.[0700]

10.2.2-7 Multiple Instruments
Where multiple telephone instruments are located close together (e.g., on a single desk), they should be coded to indicate circuit or function.[0700]

10.2.2-8 Press-to-Talk Button
If a press-to-talk button is used, the button should be convenient to both left-and right-hand operation.[0700]

10.2.2-9 Switching Mechanism
Switching should be designed and/or programmed to minimize delay in making desired connections under both normal and emergency conditions.
Additional Information: Usually the switching function is accomplished by dial switching, and the switching mechanism is located in-plant. Switching should be programmed to give the control room automatic priority of access to the switching system.[0700]

10.2.2-10 Telephone Ringing
The volume of ringing should be adjustable at the individual telephone instrument.[0700]

10.2.2-11 Announcing Use
The transmitter should be compatible with the rest of the announcing system when used as the microphone input to the announcing system.[0700]

10.2.3-1 Feedback
Within engineering constraints imposed by sound-powering, the system should provide in-phase feedback to the user.
Additional Information: In control room use, sound-powered phones are generally of the headset variety (either one or two earphones and a boom microphone in an assembly fitting on the head). Sound-powered phones are independent of external power, a feature of value in emergency use. Additionally, the headset configuration, used with conveniently located plug-in jacks, provides mobility for the user when moving to remote locations (back panels or outside the control room).[0700]

10.2.3-2 Ringing
If ringing is not installed, the user should be able to switch the sound-powered transmitter to the paging system so that a desired party can be called to the line.
Additional Information: Sound-powered phones require supplemental power, which is often hand-generated, to energize a ringing function. Often sound-powered phone circuits have no provision for ringing. Need for ringing must be determined for the individual plant depending on the sound-powered phone procedures.[0700]

10.2.3-3 Jack Provisions
Plug-in jacks for the sound-powered system should be provided within the control room.
Additional Information: Jacks should be located close to the workstations to prevent the need for unduly long cords. Jacks should not accommodate plugs of the conventionally powered phone system, in order to avoid wrong instrument-system connections.[0700]

10.2.3-4 Switching
When used, patch panels should be conspicuously marked and located in reasonably accessible places.
Additional Information: These requirements are particularly critical in back-panel areas. A complete set of cords should be provided at each panel if cord-type patching is used. The requirements for switching must be assessed for the individual plant depending on procedures for use of sound-powered phones.[0700]

10.2.3-5 Cushioning of Earpieces
Earphone cushioning to provide comfort for extended periods of wear.[0700]

10.2.3-6 Fit of Earpieces
Earpieces should cover the outer ear without causing uncomfortable pressure.[0700]

10.2.3-7 Fit of Headsets
The headset should be held firmly in place, yet be easy to remove[0700]

10.2.3-8 Storage of Headsets
A well-marked and accessible place should be provided for headset stowage[0700]

10.2.4-1 Appropriate Use

Walkie-talkies should be used in both emergency and normal operations for two-way communications beyond the range of installed telephone connections or as a convenient alternative to the sound-powered telephone.

Additional Information: However, each licensee/applicant who intends to use radio communications should determine the extent to which radio interference could adversely affect control room operations.[0700]

10.2.4-2 Sound Quality

Walkie-talkies should realize the same quality desired throughout all of the communications systems within the engineering constraints imposed by radio frequency spectrum availability and by design for easy portability.[0700]

10.2.4-3 Area Coverage

Modulation and a radio frequency should be chosen, as FCC regulations permit, to provide broad-area walkie-talkie communication to the control room.

Additional Information: One consideration for frequency selection should be radio-wave penetration of metal or reinforced concrete barriers, which at certain frequencies, would tend to attenuate or bounce the signal. Use of walkie-talkies should be prohibited in areas close to low-level analog or digital equipment, unless EMI noise susceptibility tests have been conducted that demonstrate that the equipment is not affected by the frequency bands used.[0700]

10.2.4-4 Portability

To the extent permitted by design for effective electrical/radio frequency function, walkie-talkies should be small, light, and easy to carry. The microphone should be integrated into the transceiver package.[0700]

10.2.4-5 Party Identification

Procedures should provide for unambiguous identification of the speaker when there are more than two parties on a channel operating at separate locations.[0700]

10.2.4-6 Battery Replenishment

A supply of fresh replacement batteries should be stowed in an accessible, well-marked space.

Additional Information: The stock should be kept large enough to support long periods of continuous operation in case of emergency.[0700]

10.2.5-1 Intelligibility and Coverage
The system should provide rapidly intelligible messages to all areas where personnel subject to a page may be located.
Additional Information: Adequate coverage requires that speakers should be placed so that they are available in all necessary areas and that there are no "dead spots" within any area.[0700]

10.2.5-2 Microphone Characteristics
If the powered telephone system is used to provide microphone input to the announcing system, the telephone system should contain transmitters of quality compatible with that of the announcing system.
Additional Information: Frequency response should be compatible with that of the rest of the system. Microphones should have high sensitivity to speech signals. Microphone input should be provided within the control room.[0700]

10.2.5-3 Loudspeaker Location
Speakers should be provided in the control room and other areas where personnel might be (e.g., restrooms, eating areas, and locker rooms).
Additional Information: Speakers should be placed to yield an intelligible level of signal throughout the area.[0700]

10.2.5-4 Speech Clarity
Since proper speech over an announcing system differs from normal conversation, users should be familiarized with the proper way to speak on the announcing system.[0700]

10.2.5-5 Loudspeaker Volume
Speaker volume should be adjusted to ensure that speaker communications will not prevent detection of auditory alarms.[0700]

10.2.5-6 Priority
Control room inputs to the plant announcing system should have priority over any other input.
Additional Information: The control room input should be capable of interrupting an announcement in progress, or of bypassing queued announcements.[0700]

10.2.6-1 Fixed-Base UHF Transceivers

A fixed-base UHF transceiver may be used for normal emergency communications between the control room and the following locations similarly equipped with fixed-base transceivers: Dispatcher, Security, and Utility Headquarters (if within UHF range).
Additional Information: Procedures should be established (and conspicuously posted) for use of the system. Each licensee/applicant who intends to use radio communications should determine the extent to which radio interference could affect control room operations.[0700]

10.2.6-2 Point-to-Point Intercom Systems

Intercom systems should be provided to interconnect the control room with important plant areas and other areas where control room or operating personnel might be.
Additional Information: Areas served by intercoms might include the Shift Supervisor's Office, Plant Security Office, operators' lounge, locker rooms, and restrooms.[0700]

10.2.7-1 Backup Equipment

Provisions should be made to assure complete internal and external communications capabilities during emergencies.[0700]

10.2.7-2 Equipment Usability

Communications equipment should be usable by personnel wearing protective gear without impediment to their tasks.[0700]

10.2.7-3 Voice Communications with Masks

Emergency facemasks should be equipped with diaphragms that are specially designed to transmit speech. *Additional Information:* The diaphragms should be able to separate voice from exhaust valve action. If not equipped with diaphragms, masks should be equipped with electronic speech systems that pick up the voice with an internal microphone and transmit it to a loudspeaker attached outside the mask.[0700]

10 COMMUNICATION SYSTEM
10.3 Computer-Based Communication
10.3.1 General

10.3.1-1 Interactive Communication
Users should be able to communicate interactively with other users who are currently using the same system.[5908]

10.3.1-2 Interaction With Ongoing Tasks
Users should be able to communicate with each other without canceling ongoing tasks.[5908]

10.3.1-3 Functional Integration
Computer-based communications should be integrated with other information handling functions within a system.
Additional Information: A user should not have to log off from the process monitoring system and log on to some other special system in order to send or receive a message. If data transmission facilities are in fact implemented as a separate system, that separation should be concealed in user interface design, so that a user can move from general information handling to message handling without interruption.[5908]

10.3.1-4 Consistent Procedures
Procedures for sending and receiving messages should be consistent from one transaction to another.
Additional Information: Procedures should be the same for handling different kinds of messages and for messages sent to different destinations, although procedures for handling high-priority messages might incorporate special actions to ensure special attention.[5908]

10.3.1-5 Control by Explicit User Action
Both sending and receiving messages should be accomplished by explicit user action.[5908]

10.3.1-6 Automatic Queuing
The computer should provide automatic queuing of outgoing messages pending confirmation of transmission, and incoming messages pending their review and disposition.[5908]

10.3.1-7 Interrupt
Users should be able to interrupt message preparation, review, or disposition, and then resume any of those tasks from the point of interruption.[5908]

10.3.1-8 Message Highlighting
Software capabilities should be provided to annotate transmitted data with appropriate highlighting to emphasize alarm/alert conditions, priority indicators, or other significant information that could affect message handling.
Additional Information: Highlighting will aid the handling and interpretation of messages. Such annotation might be provided automatically by software logic (e.g., a computer-generated date-time stamp to indicate currency), or might be added by the sender of a message to emphasize some significant feature (e.g., attention arrows), or by the receiver of a message as an aid in filing and retrieval.[5908]

10.3.1-9 Automatic Record Keeping
A log of data transmissions should be automatically maintained.[5908]

10.3.2-1 Automatic Message Formatting

When message formats should conform to a defined standard or structure, prestored formats should be provided to aid users in message preparation.
Additional Information: When information must be transmitted in a particular format, computer aids should be provided to generate the necessary format automatically.[5908]

10.3.2-2 Message Composition Compatible with Data Entry

Procedures for composing messages should be compatible with general data entry procedures, especially those for text editing.
Additional Information: A user should not have to learn procedures for entering message data that are different from those for general data entry.[5908]

10.3.2-3 Variable Message Length

Users should be able to prepare messages of any length.
Additional Information: In particular, data transmission facilities should not limit the length of a message to a single display screen or to some fixed number of lines. There will usually be some implicit limit on message length imposed by storage capacity or the amount of time it would take to transmit a very long message. However, a user might sometimes choose to increase storage or accept transmission delays in order to send a long message required by a particular task.[5908]

10.3.2-4 Incorporate Existing Files

Users should be able to incorporate an existing data file in a message, or to combine several files into a single message for transmission.
Additional Information: It should not be necessary for a user to re-enter for transmission any data already entered for other purposes or available in the system. It should be possible to combine stored data with new data when preparing messages for transmission.[5908]

10.3.2-5 Message Editing

Users should be able to save and edit messages prior to transmission.
Additional Information: Users should be able to save draft messages during their preparation. A user should not be forced to recreate a message if its preparation is interrupted for some reason. Users should be able to specify how to save draft messages (i.e., in what file), just as they may decide how to save copies of transmitted and received messages.[5908]

10.3.3-1 Destination Selection
Users should be able to specify the destination(s) to which messages will be transmitted.
Additional Information: Specification of message destination might be in terms of system users, as individuals or groups, or other workstations and terminals (including remote printers), or users of other systems. Standard destinations may be specified as a matter of routine procedure, with special destinations designated as needed for particular transactions. For most applications, it is important that users be able to send a message to multiple destinations with a single transmission action. For multiple recipients, it will usually be helpful to show all addresses to all recipients, so that they will know who else has received the message.[5908]

10.3.3-2 Address Directory
Users should be provided with a directory showing all acceptable forms of message addressing for each destination in the system, and for links to external systems.
Additional Information: In addition to the names of people, users may need to find addresses for organizational groups, functional positions, other computers, data files, workstations, and devices. The directory should include specification of system distribution lists as well as individual addresses.[5908]

10.3.3-3 Aids for Directory Search
Computer aids should be provided so that a user can search an address directory by specifying a complete or partial name.
Additional Information: Users will often remember a partial address, even if they cannot remember its complete form.[5908]

10.3.3-4 Extracting Directory Addresses
Users should be able to extract selected addresses from a directory or select a distribution list for direct insertion into a header in order to specify the destination(s) for a message.
Additional Information: Direct insertion of addresses from a directory will avoid errors that a user might make in manual transcription and entry, and is faster.[5908]

10.3.3-5 Automatic Addressing of Reply
The appropriate address(es) should be provided automatically for users responding to messages.[5908]

10.3.3-6 Assignment of Priority
When messages will have different degrees of urgency, the sender of a message should be allowed to designate its relative priority.[5908]

10.3.3-7 Information About Communication Status
Users should be allowed access to status information concerning the identity of other system users currently on-line, and the availability of communication with external systems.
Additional Information: Such information may influence a user's choice of destinations and choice of communication methods, as well as the decision when to initiate transmission. For example, a user might choose to link directly with another user who is currently on-line, but might compose a message for deferred transmission to an inactive user.[5908]

10.3.3-8 Sender Identification
When a message is sent, the computer should show the sender's address, and the date and time of message creation and/or transmission.[5908]

10.3.3-9 Deferring Message for Automatic Transmission
Users should be able to defer the transmission of prepared messages, to be released by a later action.
Additional Information: A user might wish to defer data transmission until some specified date-time or until a specific event has occurred.[5908]

10.3.3-10 Automatic Feedback
Automatic feedback for data transmission confirming that messages have been sent or indicating transmission failures should be provided to permit effective user participation in message handling.
Additional Information: If message transmission is not successful, the sender should be notified, if possible with an explanation of the problem. It may help a user to know whether transmission has failed because of faulty addressing, communication-link failure, or some other reason, in order to take appropriate corrective action.[5908]

10.3.3-11 Saving Undelivered Messages
If message transmission is not successful, automatic storage of undelivered messages should be provided.
Additional Information: Transmission failure should not cause loss or destruction of messages, and should not disrupt the sender's work in any other way.[5908]

10.3.3-12 Message Cancellation
Users should be able to recall any message whose transmission has been initiated, if it has not yet been received by its addressee(s).[5908]

10.3.3-13 User Review of Data Before Transmission
When human judgment may be required to determine whether data are appropriate for transmission, users (or a system administrator) should be provided some means to review outgoing messages and confirm their release before transmission.
Additional Information: Sometimes message release may require coordination among several reviewers in the interest of data protection.[5908]

10.3.3-14 Saving Transmitted Data Until Receipt is Confirmed
A copy of any transmitted message should be saved automatically until correct receipt has been confirmed.
Additional Information: The primary objective is to prevent irretrievable data loss during transmission. For many system applications, however, the originator of a message will probably want to retain a copy in any case. Any subsequent deletion of that copy should probably be handled as a separate transaction, distinct from data transmission.[5908]

10.3.4-1 Message Notification at Logon

When users log on to a system, they should be notified of any transmissions received since their last use of the system.[5908]

10.3.4-2 Display of Messages

The display of messages from other users should be visually and spatially distinct from the display of system messages.[5908]

10.3.4-3 Nondisruptive Message Notification

Notification of incoming messages should be nondisruptive.
Additional Information: Notification of incoming messages should not interrupt the user's current task and should not automatically overwrite the screen areas where the user is working. For example, the system might indicate message arrival to the user by an advisory notice in a portion of the display reserved for that purpose.[5908]

10.3.4-4 Indicating Priority of Received Messages

Where incoming messages will have different degrees of urgency, recipients should be notified of message priority and/or other pertinent information.
Additional Information: Notification of urgent messages might be routed to a special area of a user's working display for immediate reference, whereas notification of routine messages might be deferred, or perhaps routed to a printer for review at the user's convenience. If incoming messages are queued so that their arrival will not interrupt current user tasks, then users should be advised when an interruption is, in fact, necessary.[5908]

10.3.4-5 Filters for Message Notification

Users should be able to specify "filters" based on message source, type, or content, that will control what notification is provided for incoming messages.
Additional Information: For example, a user might wish the arrival of all messages from a particular source to produce a special notification.[5908]

10.3.4-6 Time-Stamp Messages

Messages should be time-stamped.
Additional Information: The time stamp should provide information needed to manage messages. Some types of time stamps include: date and time of message origin, release, receipt at receiving station, and opening by user.[5908]

10.3.4-7 Indicate Message Size

Some indication of message size should be included at the beginning of each message.
Additional Information: For example, message size might be calculated as number of lines and indicated in its header.[5908]

10.3.4-8 Indication of Message Overflow

The user should be informed when a message has been truncated, such as when a message exceeds the available space.
Additional Information: An end-of-message indicator that is automatically generated when a message is transmitted can help the user verify that the message is complete.[5908]

10.3.4-9 Message Storage and Retrieval
Messages should be stored in a message queue that is available to the user.
Additional Information: For example, the user might be able to scroll through a log file containing the message, time, date, and origin.[5908]

10.3.4-10 Information about Queued Messages
Users should be able to review summary information about the type, source, priority, and size of queued incoming messages.
Additional Information: In some applications, a user might need notification only of urgent messages, and may rely on periodic review to deal with routine messages. Summary information about queued incoming messages should help guide message review.[5908]

10.3.4-11 User Selection of Messages
The user should be allowed to select any message from an ordered queue with a simple action.[5908]

10.3.4-12 Annotating Received Messages
Users should be able to append notes to a received message, and ensure that the annotation will be displayed so that it will be distinct from the message itself.
Additional Information: Users should not be allowed to make changes in received messages. Any such changes would simply provide too much chance for resulting confusion. However, users should be able to append, file, and display their own comments about received messages in some distinctively separate form. If changes are desired in a message itself, then its recipient might make a copy of that message (with appropriate change of its header information) and then edit the copy.[5908]

10.3.4-13 Specifying Device Destination
Users should be able to choose the method of receipt, i.e., what device (file, display, printer) will be the local destination. If a specified receiving device is not operable, such as a printer that is not turned on, the user should be advised.
Additional Information: When messages are received via display, queuing of incoming messages should be provided so that they will not interfere with use of that display for other information handling tasks. Device destination might be specified differently for various types of messages, or for messages received from different sources. Transmitted data might be received directly into computer files. Incoming messages might be routed to an electronic display for quick review, and/or to a printer for hardcopy reference.[5908]

Part III
Workstation and Workplace Design

SECTION 11: WORKSTATION DESIGN

11 WORKSTATION DESIGN

WORKSTATION CONFIGURATION

HSI elements are organized into workstations, where the operators perform their functions and tasks. Types of workstations include sit-stand workstations, stand-up consoles, sit-down consoles, vertical panels, and desks (e.g., used by personnel when performing tasks related to the operation and safety of the plant, such as by a shift supervisor in the main control room). The operators' performance may be affected by design characteristics that affect reach, vision, and comfort. Unique considerations for these types of workstations include the following:

- Workstation height (i.e., for workstations that the operator must see over)
- Benchboard slope, angle, and depth for consoles and sit-stand workstations (i.e., accommodations for reach; provision of writing space)
- Control device location (i.e., placement of highest and lowest controls; distance from front edge of workstation)
- Display device location (i.e., placement of highest and lowest display devices, orientation relative to line of sight, viewing distance, position of frequently and infrequently monitored display devices)
- Lateral spread of control and display devices at a console or workstation
- Clearances for legs and feet.

In addition, the workstation design includes the seating provided for personnel at the consoles or desks. Important considerations include mobility; rests for back, arms, and feet; seat adjustability, and cushioning. Review guidelines for workstation configuration are provided as follows: stand-up consoles in Section 11.1.1, sit-down consoles in Section 11.1.2, sit-stand workstations in Section 11.1.3, vertical panels in Section 11.1.4, desks in Section 11.1.5, and chairs in Section 11.1.6.

CONTROL AND DISPLAY DEVICE LAYOUT

Control and display devices are not usually used in isolation. Often groups of devices are used together to perform a task. Therefore, the following relationships among devices should be addressed:

- Grouping of related controls or displays (i.e., by sequence of use, frequency of use, and importance)
- Control devices (i.e., spacing; interference with access; inadvertent actuation of adjacent controls; simultaneous actuation of controls)
- Display devices (i.e., row arrangement; string length)
- Control-display layout integration (e.g., orientation, proximity, obscuration, and indication of association) for
    - a single control and display pair
    - multiple controls and a single display
    - a single control and multiple displays
- Dynamic control-display relationships (i.e., response compatibility between controls, including rotary and linear devices, and displays, such as linear scales, digital displays, indicator light strings, and circular meter points)

- Between-group and within-group relationships (i.e., control and display modules; repeated groups and functions; mirror-image layouts)

Review guidelines for control and display device layout are provided in Section 11.2.

LABELING AND DEMARCATIONS

Labels and demarcations can help operators find and identify controls, displays, and other equipment.

Labels

Permanent labels may be used for panels, groups of controls and displays, individual items, instructions, control direction, and access openings. In addition, temporary labels may be used for such purposes as tagging-out equipment. The following characteristics of labels are important to operator performance:

- Location (i.e., proximity of adjacent labels; orientation; surface mounting considerations)
- Content (i.e., information content, distinguishability, consistency, and agreement with procedures)
- Lettering (i.e., character height, width, font, spacing, stroke width, and contrast with background)

Demarcation

Demarcation lines are used to identify workstation sections and groups of controls and displays. Important characteristics include contrast, consistency, and permanence. Another important consideration is the rationale that was used in applying them (e.g., the types of controls and displays they enclose). Review guidelines for labels and demarcations are provided in Section 11.3.

11 WORKSTATION DESIGN
11.1 Workstation Configuration
11.1.1 Stand-Up Console Dimensions

11.1.1-1 Console Height to See Over
Console height (with or without annunciator panels) should not exceed 58 inches when it is necessary for a user standing at the console to see over its top.[0700]

11.1.1-2 Control Height
The highest control on a stand-up console should be within the highest reach of the 5th percentile female without stretching or using a stool or ladder, while the lowest controls should be within the lowest reach of the 95th percentile male without bending or stooping, as shown in Table 11.1.
Additional Information: The range of suitable control height on stand-up consoles is defined by the reach radius of the 5th and 95th percentiles. Measurements should be made using shoulder height and functional reach with the shoulder in line with the leading edge of the benchboard, as shown in Figure 11.1. The figure shows the results of two console designs with differing benchboard slope and depth. Controls may be placed somewhat higher on consoles with shallower and/or more steeply angled benchboards, which allow the shoulder reference point to be closer to the back of the benchboard and to the vertical panel.[0700]

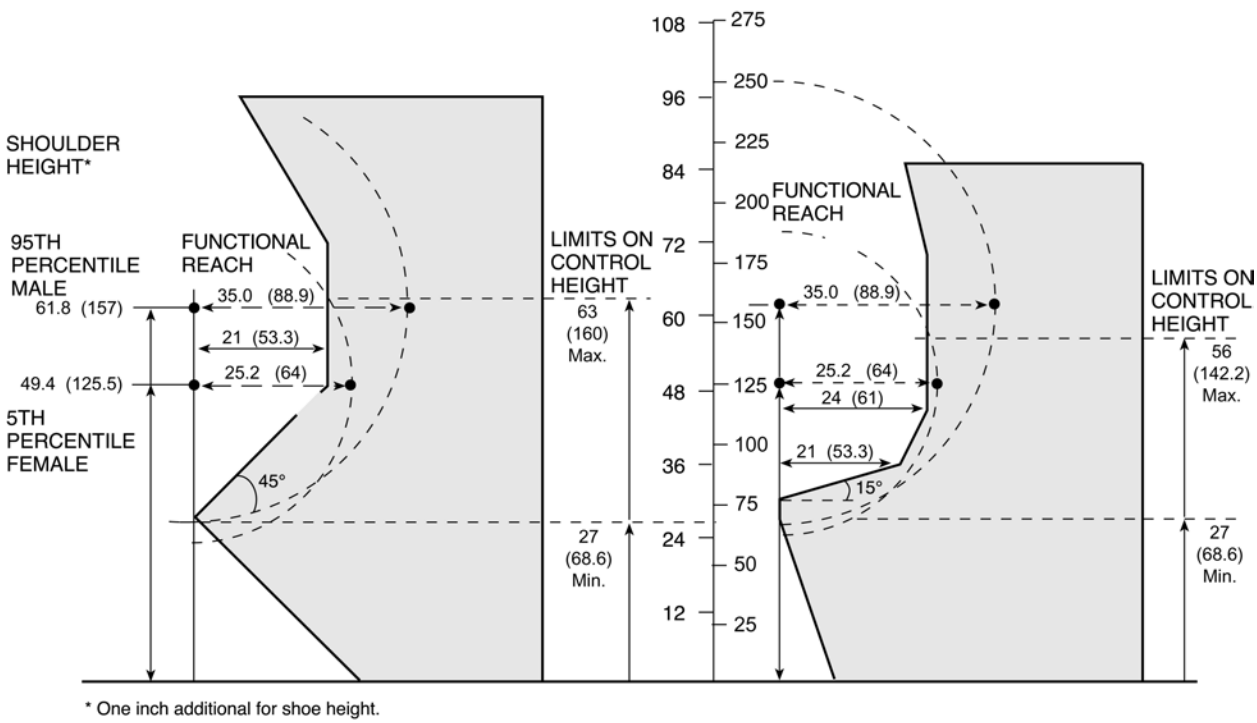

Figure 11.1 Reach capabilities and control height for two stand-up consoles (the console on the right includes a keyboard surface)

Table 11.1 Anthropometric data used to set limits for equipment dimensions

Standing (without shoes)	Bounding Measurements (inches)	
	5th %-ile Adult Female	95th %-ile Adult Male[1]
Stature	60.0	73.5
Eye height from floor	55.5	68.6
Shoulder height	48.4	60.8
Elbow height	37.4	46.8
Fingertip height[2]	24.2	28.8
Functional reach[3]	25.2	35.0
Extended functional reach[4]	28.9	39.0
Central axis of body to leading edge of console[5]	5.0	5.3
Eye distance forward of central axis to body[5]	3.0	3.4
Seated	**Bounding Measurements (inches)**	
	5th %-ile Adult Female	**95th %-ile Adult Male[1]**
Popliteal height (bend at back of knee)	15.0	19.2
Sitting height above seat surface (erect)	31.1	38.5
Sitting height above seat surface (relaxed)	30.5	37.6
Eye height above seat, sitting erect	26.6	33.6
Shoulder height above seat surface	19.6	25.8
Elbow height above seat surface	6.4	11.3
Functional reach	25.2	35.0
Extended functional reach	28.9	39.0
Thigh clearance height	4.1	7.4
Buttock-popliteal length	17.1	21.5
Knee height	18.5	23.6
Central axis of body to leading edge of console[5]	5.0	5.3
Eye distance forward of central axis of body[5]	3.0	3.4

(Source: MIL-STD-1472D, Section 5.6.)

[1] MIL-STD-1472D gives separate values for male troops and aviators. The two were averaged for presentation here.
[2] Data for male aviators only, 5th and 95th percentiles.
[3] Measured from wall to tip of right index finger, with arm extended horizontal to floor, both shoulders against wall.
[4] Measured as stated above, except right shoulder extended as far as possible with left shoulder against wall.
[5] These measurements are not given in MIL-STD-1472D. Values provided in Seminara et al. are presented although they are based on measures of a different population. Differences in other measurements between the MIL-STD population and the EPRI population are small enough that these EPRI values should provide reasonable approximations.

11.1.1-3 Benchboard Slope

The benchboard slope, in conjunction with its depth, should result in all controls being within the reach radius of the 5th percentile female, as shown in Table 11.1 and illustrated in Figure 11.1.[0700]

11.1.1-4 Minimum Distance of Controls from the Front Edge of the Console

Controls should be set back a minimum of 3 inches from the front edge to protect against accidental activation.[0700]

11.1.1-5 Maximum Distance of Controls from the Front Edge of the Console

Controls should be no more than 25 inches from the front edge of the console.
Additional Information: This accommodates the maximum reach of the 5th percentile female adult as illustrated in Figure 11.1.[0700]

11.1.1-6 Display Height and Orientation

All displays, including alarm indicators, should be within the upper limit of the visual field (75 degrees above the horizontal line of sight) of the 5th percentile female (see Table 11.1), and should be mounted so that the interior angle between the line of sight and the display face is 45 degrees or greater (see Figure 11.2).
Additional Information: The 5th percentile female determines the upper limit. The 95th percentile male determines the lower limit. The principal factors affecting the readability of displays, including annunciator tiles, are: (1) display height and orientation relative to the user's line of sight when standing directly in front of the display; (2) display distance and orientation relative to the user's straight-ahead line of sight when the user must read the display from an off-side position; and (3) the size of display markings relative to the distance at which the display must be read. Character size is addressed in Section 1.3.1, Alphanumeric Characters, and is not considered here. Except as specifically noted, measurements of angles should be made with the eye point in line with the leading edge of the benchboard.[0700]

11 WORKSTATION DESIGN
11.1 Workstation Configuration
11.1.1 Stand-Up Console Dimensions

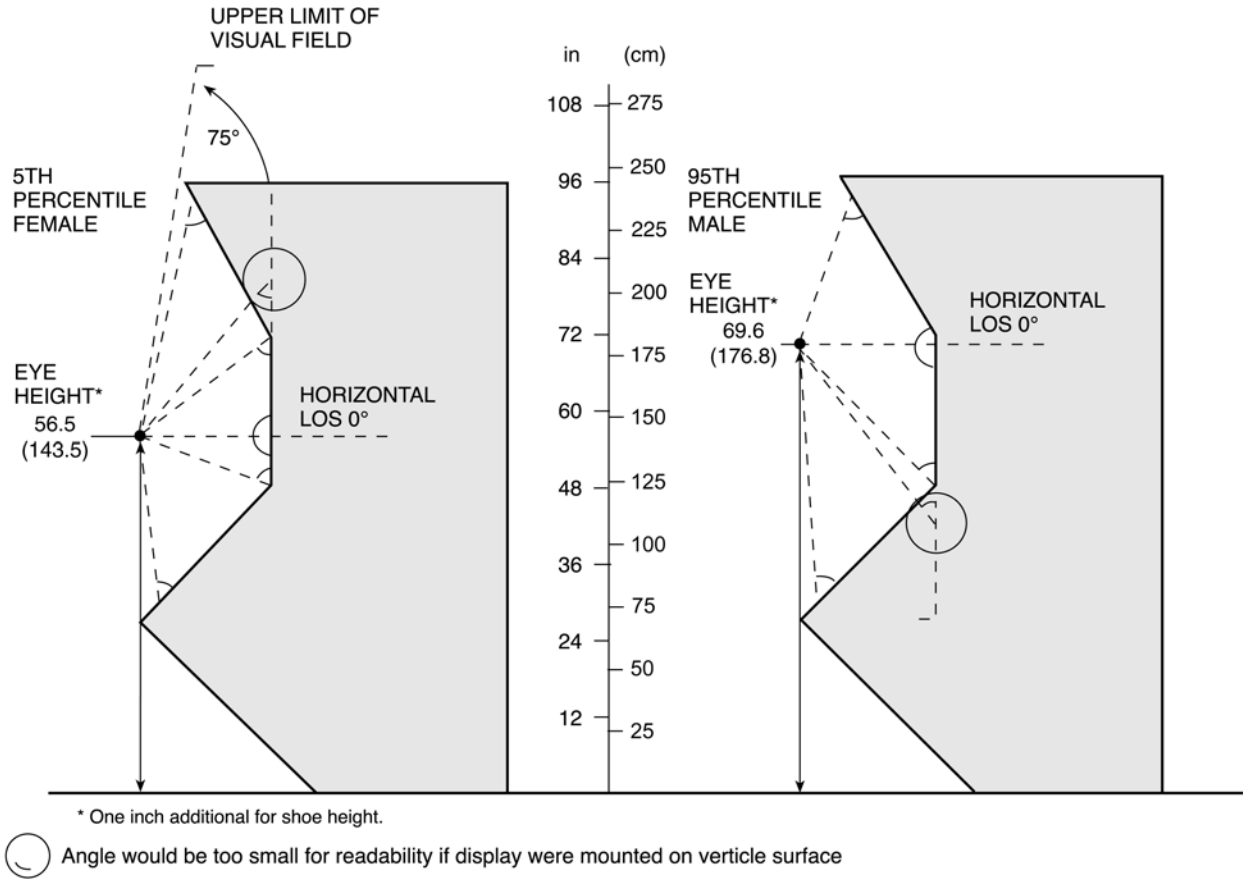

Figure 11.2 Display height and orientation relative to a standing user's line of sight

11.1.1-7 Location of Frequently Monitored Displays
Displays that require frequent or continuous monitoring, or that may display important (e.g., alarm) information, should be located not more than 35 degrees to the left or right of the user's straight-ahead LOS, and not more than 35 degrees above and 25 degrees below the user's horizontal LOS, measured from the normal workstation.[0700]

11.1.1-8 Location of Infrequently Monitored Displays
Displays that do not require frequent or continuous monitoring, and that will not display important (e.g., alarm) information, should be located not more than 95 degrees to the left or right of the user's straight-ahead LOS, as measured from normal workstations.[0700]

11.1.1-9 Lateral Spread of Controls and Displays
The maximum lateral spread of controls and displays at a single-user workstation should not exceed 72 inches.
Additional Information: The user should be able to perform task sequences at a given work station with minimum repositioning. The amount of movement required depends on the arrangement of controls and displays, not simply on the lateral dimensions of the segments of the control board.[0700]

11 WORKSTATION DESIGN
11.1 Workstation Configuration
11.1.1 Stand-Up Console Dimensions

11.1.1-10 Foot Room
Enough foot room should be provided to allow the user to get close to the board without leaning.
Additional Information: A clearance of 4 inches vertically and horizontally is recommended.[0700]

11.1.2-1 Console Height to See Over

Console height should be no more than approximately 27 inches above the seat to accommodate the 5th percentile adult female when a seated user must see over the console. Assuming seat height is adjusted to 18 inches, maximum console height therefore should be 45 inches above the floor.
Additional Information: See-over console heights above 45 inches may be acceptable, for example, where the seated user need only monitor (not read) status lights and annunciators beyond the console, if they are at a suitable distance and height.[0700]

11.1.2-2 Control Height

All controls on a sit-down console should be within the reach radius of the 5th percentile female, as shown in Table 11.1 and illustrated in Figure 11.3.
Additional Information: Measurements should be made using seated shoulder height with the shoulder in line with the leading edge of the benchboard.[0700]

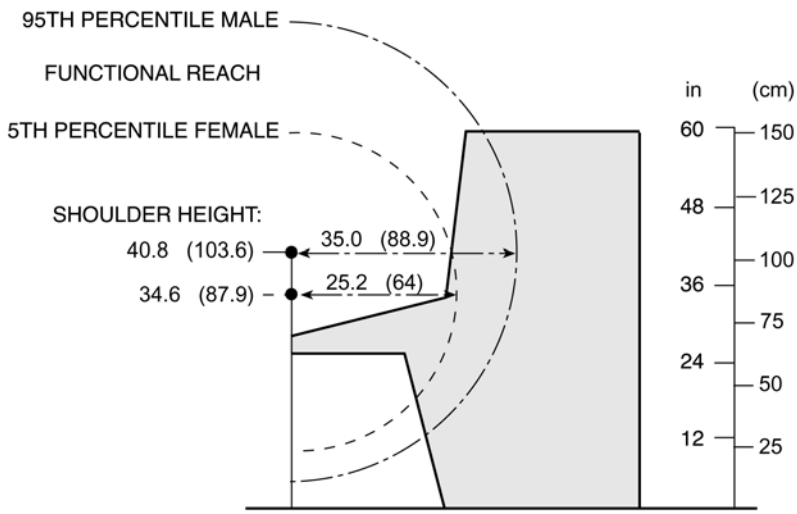

Figure 11.3 Reach capabilities for sit-down consoles

11.1.2-3 Benchboard Slope

The benchboard slope, in conjunction with its depth, should be such that all controls are within the functional reach radius of the 5th percentile female (as shown in Table 11.1 and illustrated in Figure 11.3) and all displays and markings can be read.[0700]

11.1.2-4 Minimum Distance of Controls from the Front Edge of the Console

Controls should be set back a minimum of 3 inches from the front edge to protect against accidental activation.[0700]

11.1.2-5 Display Height and Orientation

All displays, including alarm indicators, should be within the upper limit of the visual field (75 degrees above the horizontal line of sight) of the 5th percentile female (see Table 11.1), and should be mounted so that the interior angle between the line of sight and the display face is 45 degrees or greater (see Figure 11.4).

Additional Information: The 5th percentile female determines the upper limit. Practically, there is no lower limit for a plausible sit-down console design. The principal factors affecting the readability of displays, including alarm indicators, are: (1) display height and orientation relative to the user's LOS when standing directly in front of the display; (2) display distance and orientation relative to the user's straight-ahead LOS when the user must read the display from an off-side position; and (3) the size of display markings relative to the distance at which the display must be read. Character size is addressed in Section 1.3.1, Alphanumeric Characters, and is not considered here. Except as specifically noted, measurements of angles should be made with the eye point in line with the leading edge of the benchboard.[0700]

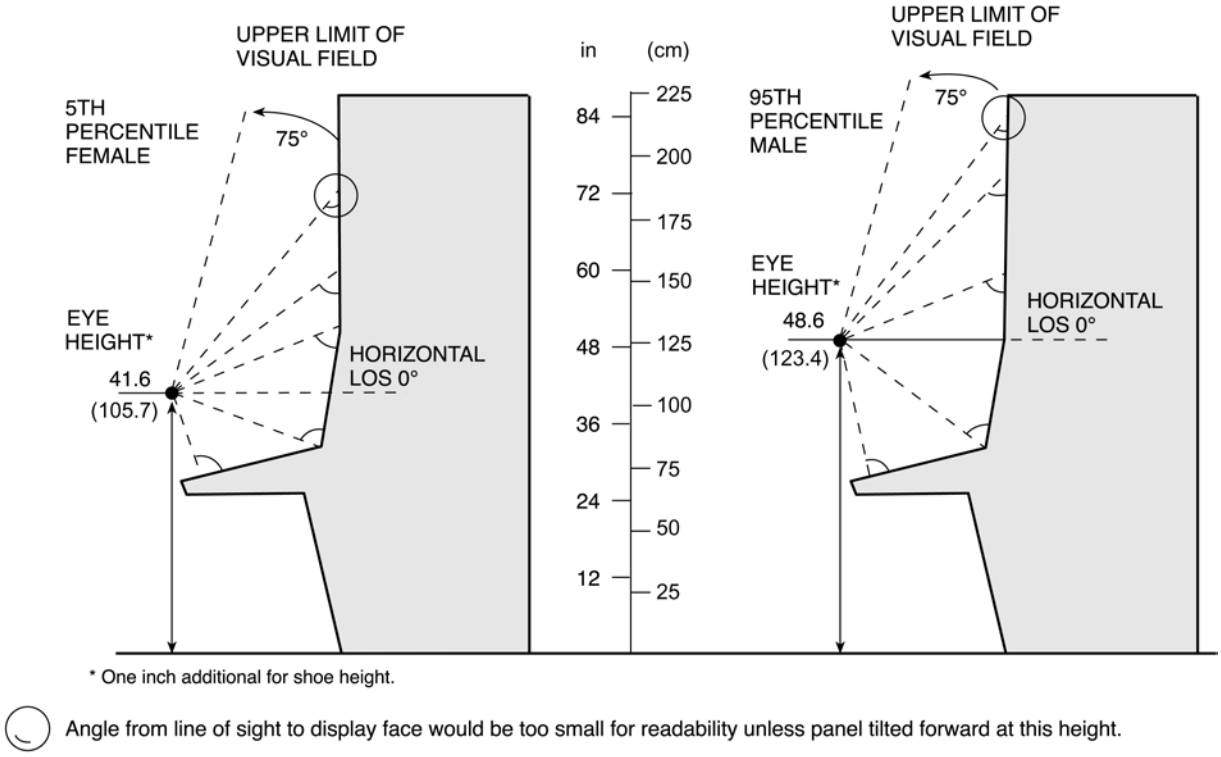

Figure 11.4 Display height and orientation relative to a seated user's line of sight

11.1.2-6 Location of Frequently Monitored Displays

Displays that require frequent or continuous monitoring, or that may display important (e.g., alarm) information, should be located not more than 35 degrees to the left or right of the user's straight-ahead LOS, and not more than 20 degrees above and 40 degrees below the user's horizontal LOS, as measured from the normal workstation.[0700]

11.1.2-7 Location of Infrequently Monitored Displays

Displays that do not require frequent or continuous monitoring, and that will not display important (e.g., alarm) information, should be located not more than 95 degrees to the left or right of the user's straight-ahead LOS, as measured from normal workstations.[0700]

11.1.2-8 VDU Viewing Distance

The viewing distance should be 13-30 inches (33 to 80 cm), with 18-24 inches (46-61 cm) preferred.
Additional Information: Display size, symbol size, brightness ranges, line-pair spacing and resolution should be appropriate for the maximum expected viewing distance.[5908]

11.1.2-9 Lateral Spread of Controls and Displays

All necessary controls and displays needed for critical or frequently performed activities should be within the maximum extended reach and viewing range of a seated user from a single reference point as shown in Table 11.1 and illustrated in Figure 11.5.
Additional Information: For sustained or precise control action, the user should be able to reach the controls without having to bend/stretch significantly. The acceptable lateral spread of controls and displays on sit-down consoles depends primarily on the reach of the users, panel orientation, grouping of controls and displays, and the freedom of the user to adjust seat position (center reference point) given task sequence requirements. Figure 11.5 illustrates reach and viewing range related to lateral and forward distance from a center reference point.[0700]

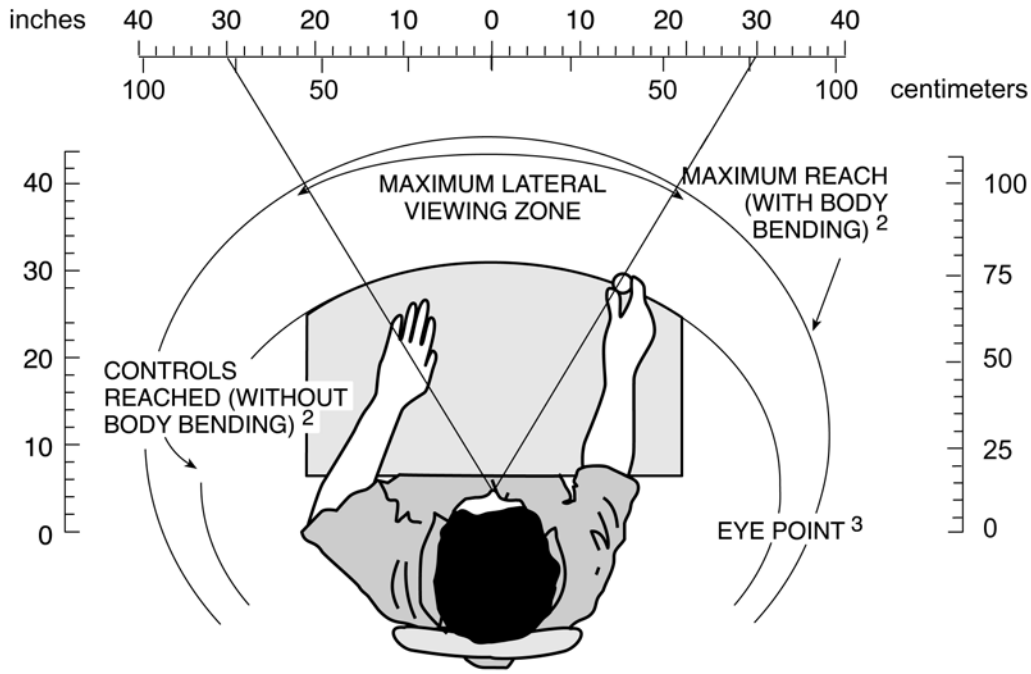

[1] 28 inches forward of the eye point is the maximum distance for displays when viewing is limited by reach (control-display relationship). Viewing distance may be extended provided display is properly designed. Greater lateral spread of displays would require a wraparound panel.

[2] Based on 5th percentile male data; less for 5th percentile females.

[3] Console edge approximately 4" to 6" forward of eye point for 5th-95th percentile.

Figure 11.5 Reach and visual range related to lateral and forward distance from center point

11.1.2-10 Leg and Foot Room

Sufficient leg and foot room should be provided to enable seated users to avoid awkward and uncomfortable positions. Figure 11.6 shows the dimensions involved and gives minimums and ranges necessary to accommodate the 5th percentile female and 95th percentile male, as defined in Table 11.1.[0700]

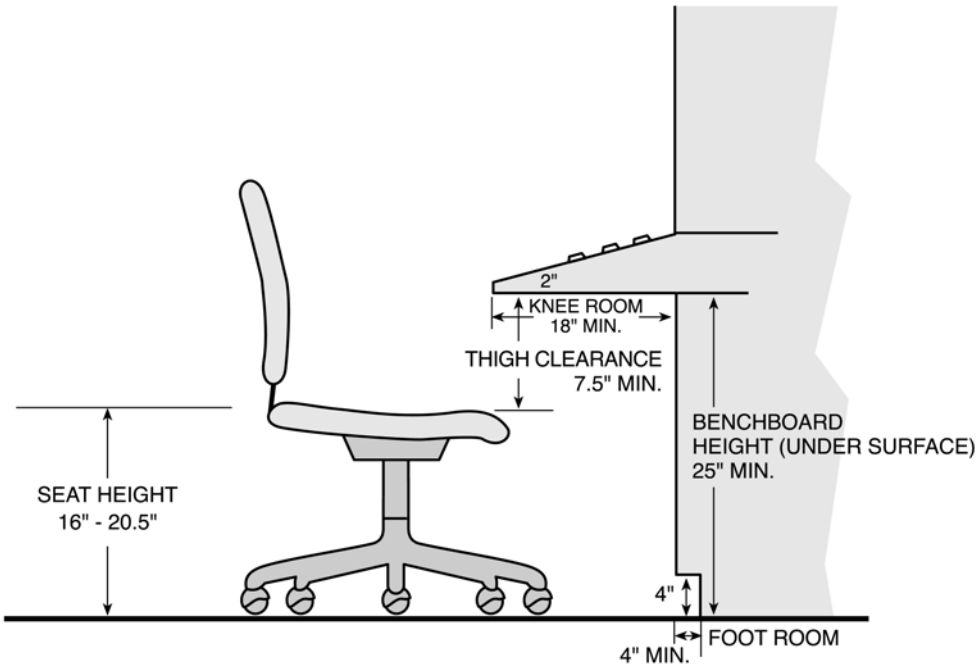

Figure 11.6 Leg- and foot-room dimensions

11.1.2-11 Writing Space on Consoles
If writing space is needed by users working at consoles, an area at least 16 inches deep and 24 inches wide should be provided, where these dimensions in the total configuration would fit users' reach capabilities.
Additional Information: Less space may be adequate considering the frequency and duration of writing requirements at control room consoles. If writing space is provided on the console itself, it should not interfere with viewing and manipulation of controls and displays. If writing is necessary but space on the console is not available, other arrangements such as a nearby desk or table should be provided.[0700]

11.1.2-12 Use of Procedures and Other Reference Materials at Consoles
Provision should be made so that the procedures, manuals, and other reference materials can be consulted easily while task sequences are performed at the consoles.
Additional Information: Lack of space in which to lay down procedures can encourage the poor practice of placing them on the console. A rolling bookcase is a convenient place for storing procedures and manuals and also provides space for laying down procedures during use.[0700]

11.1.3-1 Appropriate Use

Sit-stand combinations should be used when users need mobility to monitor large panel areas but also need the stability of seated operation for precise task sequences.
Additional Information: This is especially true when such task sequences go on for fairly long periods and require sustained attention (e.g., reactor startup/shutdown).[0700]

11.1.3-2 Control and Display Positioning

The height and lateral limits for controls and displays should conform to the guidelines given for stand-up consoles (see Section 11.1.1, Stand-Up Console Dimensions).[0700]

11.1.3-3 Seat Height

The user should be provided with a high seat so that the seated eye height is approximately the same as standing eye height.[0700]

11.1.3-4 Knee Room

Knee room and comfortable foot support should be provided.[0700]

11.1.4-1 Control Height

Controls should be placed in an area between 34 inches and 70 inches above the floor. Controls requiring precise or frequent operation and emergency controls should be placed in an area between 34 inches and 53 inches above the floor (see Figure 11.7).[0700]

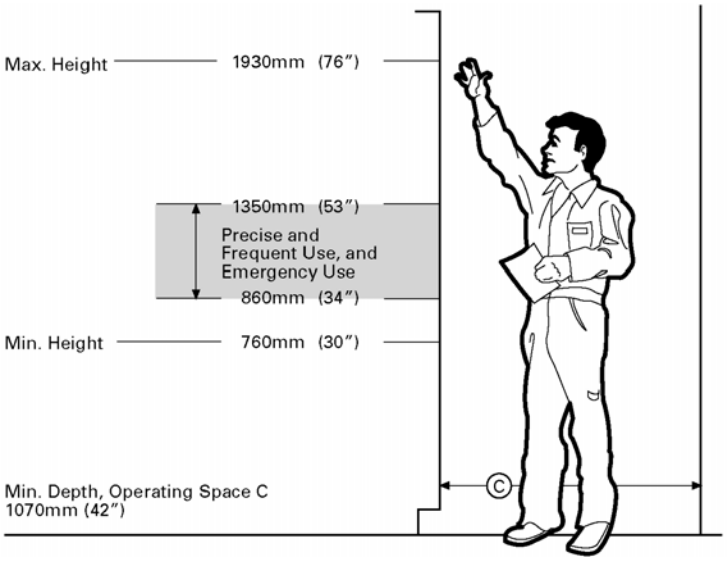

Figure 11.7 Control height

11.1.4-2 Display Height

Displays should be placed in an area between 41 inches and 70 inches above the floor. Displays that must be read frequently or precisely should be placed in an area between 50 inches and 65 inches above the floor (see Figure 11.8).[0700]

11 WORKSTATION DESIGN
11.1 Workstation Configuration
11.1.4 Vertical Panels

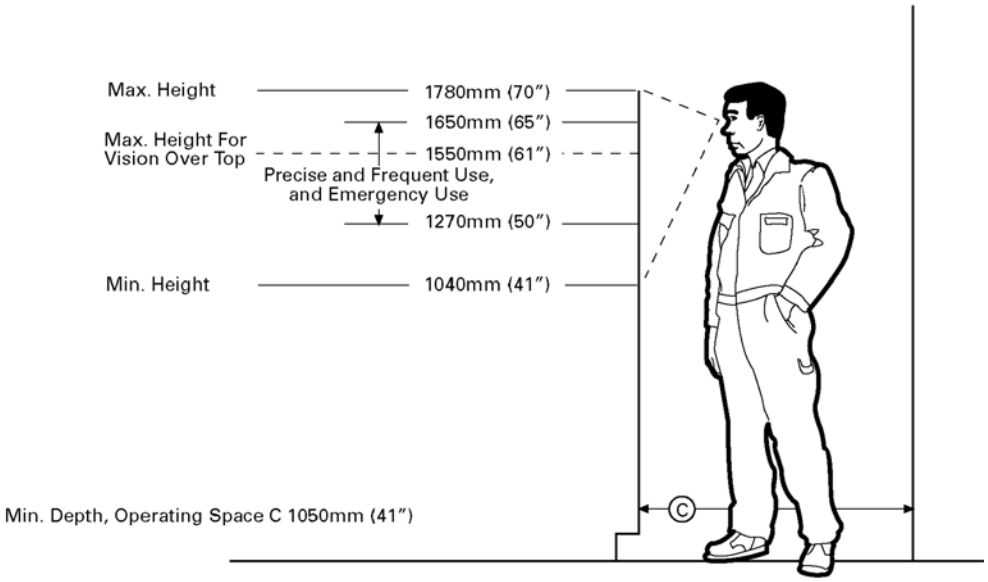

Figure 11.8 Display height

11 WORKSTATION DESIGN
11.1 Workstation Configuration
11.1.5 Desk Dimensions

11.1.5-1 Working Space
Desks should provide enough clear working space for all materials required for task performance.[0700]

11.1.5-2 Chair Positions
The desk should allow for different chair positions as required, with adequate knee space.[0700]

11.1.5-3 Comfort
The relationships of working surface height and area, knee room, and chair height should allow users to work comfortably.[0700]

11.1.5-4 Dimensions
Desk dimensions should conform to those shown in Figure 11.9.
Additional Information: Desk dimensions should be as follows:

- For seated work only, 26 to 31 inches above the floor (29 inches is a standard height)
- For sit-stand desks, 36 to 38 inches above the floor
- Work surface area depth should be 16 inches minimum
- Work surface area width should be 24 inches minimum if tasks involve reading and writing only; 30 inches minimum if other kinds of tasks are required
- For knee room height, a distance of approximately 25 inches from the floor to the under-surface of the desk top should provide adequate clearance for 5th to 95th percentile male and female adults at sit-down-only stations
- For knee room depth, 18 inches minimum
- Knee room width should be 20 inches (an even greater width is preferred) [0700]

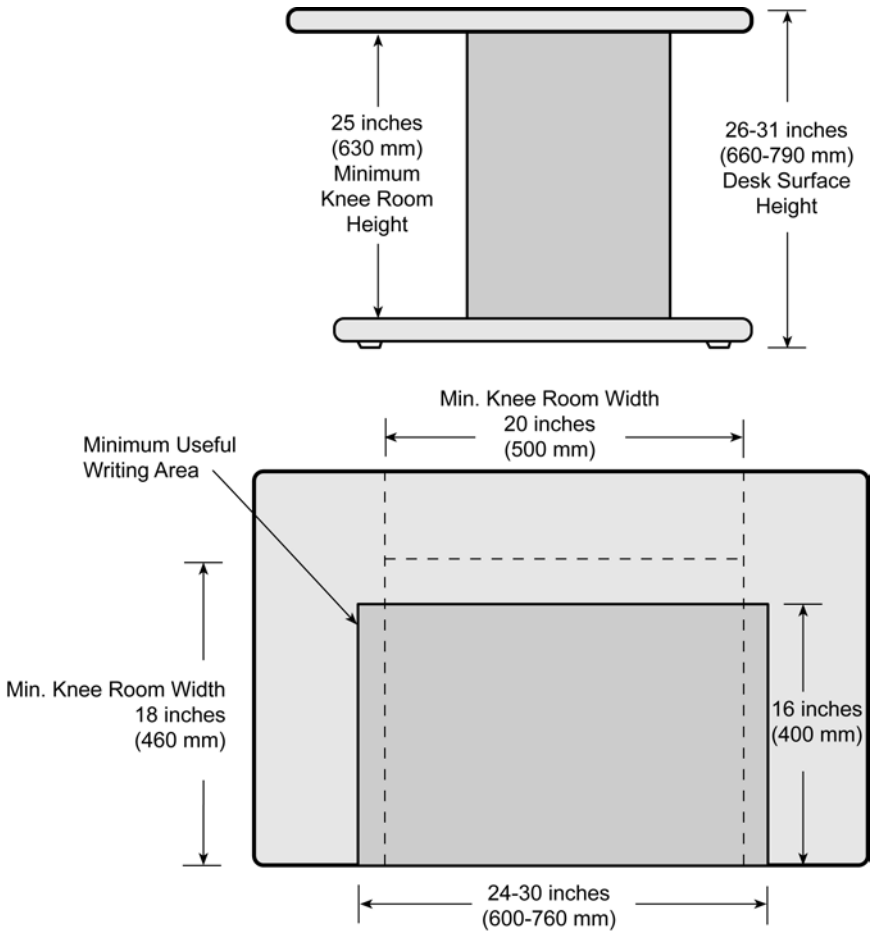

Figure 11.9 Recommended desk dimensions

11.1.6-1 Mobility

Chairs should pivot so that operators can readily adjust position.
Additional Information: Mobile bases (casters) are recommended for chairs at sit-only stations.[0700]

11.1.6-2 Backrests

Chairs should support at least the lower back curvature (lumbosacral region).
Additional Information: The recommended angle between the back and the seat is about 100 degrees for office tasks (such as keyboard tasks). A greater angle is preferred for reading and resting.[0700]

11.1.6-3 Armrests

Where personnel may remain seated for relatively long periods, chairs with armrests should be provided.
Additional Information: Adjustable or retractable armrests may be necessary to allow the elbows to rest in a natural position and for compatibility with a particular desk/console.[0700]

11.1.6-4 Cushioning

The seat and backrest should be cushioned with at least 1 inch of compressible material, enough so that some resilience remains when the chair is occupied.[0700]

11.1.6-5 Seat Dimensions

The seat should be at least 18 inches wide and between 15 and 17 inches deep.
Additional Information: The thighs and the backs of the knees should not be compressed so as to cause fatigue and circulation problems.[5908, 0700]

11.1.6-6 Seat Adjustability

For chairs at sit-down stations, seat height should generally be adjustable from 16 to 20.5 inches. For chairs at sit-stand stations, seat height should be adjustable from 26 to 32 inches.[5908, 0700]

11.1.6-7 Footrests

An adjustable footrest or heel catch should be provided to support the feet at a level no more than 18 inches below the seat surface.
Additional Information: If a footrest is part of the chair, a circular design is recommended, diameter 18 inches. The footrest might be provided on the console base.[0700]

11.2.1-1 Proximity

A visual display that will be monitored during control manipulation should be located sufficiently close that a user can read it clearly and without parallax from a normal operating posture.[0700]

11.2.1-2 Obscuration

Controls and displays should be located so that displays are not obscured during control operation.
Additional Information: To avoid having the user's hand obscure the display, controls should be located below (see 'B' in Figure 11.10) the associated display. When this is not possible, the control should be located to the right of the display (see 'A' in Figure 11.10).

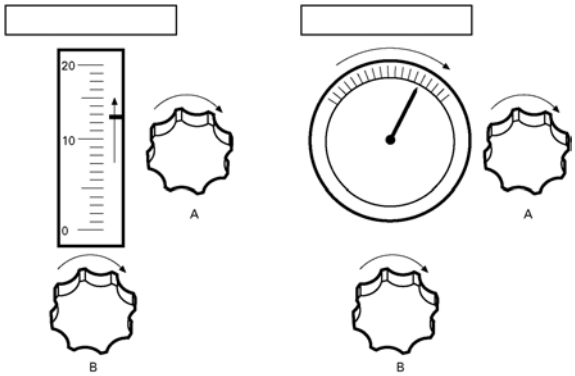

Figure 11.10 Position of control actuator and associated display

11.2.1-3 Association

Related controls and displays should be easily identified as being associated.
Additional Information: This association can be established (or enhanced) by (1) location, (2) labeling, (3) coding, (4) demarcation, and (5) consistency with user expectations. The following relationships should be immediately apparent to the user: (1) association of displays with controls; (2) the direction of movement of control and display; and (3) the rate and limits of movement of the control and display. See Figure 11.11.[0700]

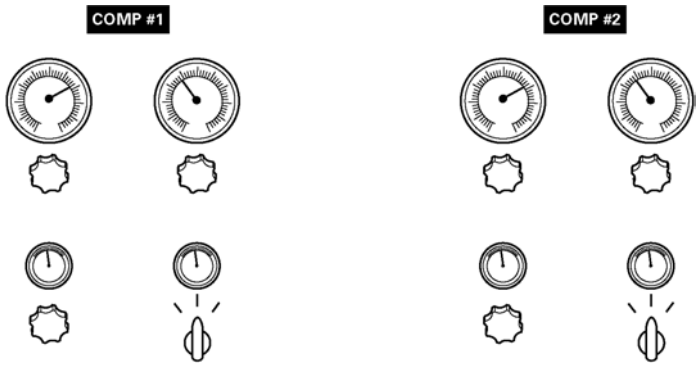

Figure 11.11 Association by grouping

11 WORKSTATION DESIGN
11.2 Control and Display Device Layout
11.2.2 Control-Display Integration
11.2.2.1 Multiple Controls, Single Display

11.2.2.1-1 Controls Mounted Below Display
Multiple controls should be mounted below the single display.[0700]

11.2.2.1-2 Alternative Control Position
If it is not feasible to mount multiple controls directly below the single display, controls should be mounted to the right of the display.[0700]

11.2.2.1-3 Controls Centered on Display
Multiple controls should be centered on the single display.[0700]

11.2.2.1-4 Grouping of Controls
Multiple controls should be grouped in a line or matrix.[0700]

11.2.2.1-5 Arrangement of Controls
Where there is a normal order of use, multiple controls should be arranged for use in left-to-right, top-to-bottom, or other natural sequence.[0700]

11.2.2.1-6 Enhancement of Control Layout
Layout enhancement techniques should be employed where the above techniques cannot apply, or where for other reasons the relationships are not readily apparent.[0700]

11.2.2.2-1 Displays Located Above Control
Multiple displays should be located above the single control.[0700]

11.2.2.2-2 Alternative Position for Displays
If it is not feasible to mount multiple displays above the single control, they should be mounted to the left of the control.[0700]

11.2.2.2-3 Control Centered Below Displays
The single control should be placed as near as possible to the display, and preferably underneath the center of the display array.[0700]

11.2.2.2-4 Grouping of Displays
Multiple displays should be arranged horizontally or in a matrix.[0700]

11.2.2.2-5 Arrangement of Displays
Where there is a normal order of use, multiple displays should read from left-to-right, top-to-bottom, or in other natural sequence.[0700]

11.2.2.2-6 Visibility During Control Manipulation
Multiple displays should not be obscured during control manipulation.[0700]

11.2.2.2-7 Enhancement of Display Layout
Layout enhancement techniques should be employed where the above techniques cannot apply, or where for other reasons the control-display relationship is not clearly apparent.[0700]

11.2.2.2-8 Display Selector Motion
The display selector control should move clockwise from OFF (if appropriate) through settings 1, 2, 3...n.[0700]

11.2.2.2-9 Display Selector Sequence
The display selector control position sequence should conform to the display sequence.[0700]

11.2.2.2-10 Display Selector Labeling
Display selector control position indications should correspond with display labels.[0700]

11.2.2.2-11 Display Selectors Scale
Displays should read off scale, not zero, when not selected, especially if zero is a possible parameter displayed.[0700]

11.2.2.3-1 Rotary Controls

Rotary controls should turn clockwise to cause an increase in parameter value. Associated display movements should be: (1) analog scales, up or to the right; (2) digital displays, increasing in value; (3) strings of indicator lights, bottom-to-top or left-to-right; and (4) circular meter pointers, clockwise.[0700]

11.2.2.3-2 Linear Controls

Linear controls should move up or to the right to cause an increase in parameter value. The associated display relationships should be: (1) analog scales, up or to the right; (2) digital displays, increasing in value; and (3) strings of indicator lights, bottom-to-top or left-to-right.[0700]

11.2.2.3-3 Display Response Time Lag

When there is a time lag between control actuation and ultimate system state, there should be an immediate feedback indication of the process and direction of parameter change.
Additional Information: In some cases, there will be a time lag between the actuation of a control and the resulting change in system condition. That condition should be reflected by displays in real time.[0700]

11.2.2.3-4 Precision of Control

Controls should provide a capability to affect the parameter controlled easily, with the required level of precision.
Additional Information: They should be effective in sufficient time, under expected dynamic conditions, and within the limits of manual dexterity, coordination, and reaction time.[0700]

11.2.2.3-5 Resolution of Display

Displays should provide a capability to distinguish significant levels of the system parameter controlled.[0700]

11.2.2.3-6 Excess Precision

The precision of displays and controls should not greatly exceed that required.[0700]

11.2.2.3-7 Feedback

Feedback from the display should be apparent for any deliberate movement of a control.[0700]

11.2.3-1 Functional Grouping

Multiple controls or displays related to the same function should be grouped together.[0700]

11.2.3-2 Sequence of Use

Sequence of use should be as follows: (1) left to right, (2) top to bottom, or (3) the above combined (normal reading order).[0700]

11.2.3-3 Display Above Each Control

The preferred configuration is with the display above each control.
Additional Information: If this configuration is used, the following should apply: (1) each display should be located directly above its associated control; and (2) the display/control pairs should be arranged in rows.[0700]

11.2.3-4 Controls and Displays in Rows

Displays may be arrayed in rows as the upper portion of a panel, matched to controls arrayed in similar rows below (see Figure 11.12).
Additional Information: Each control should occupy the same relative position as the display to which it is associated. Controls and displays should have corresponding labels.[0700]

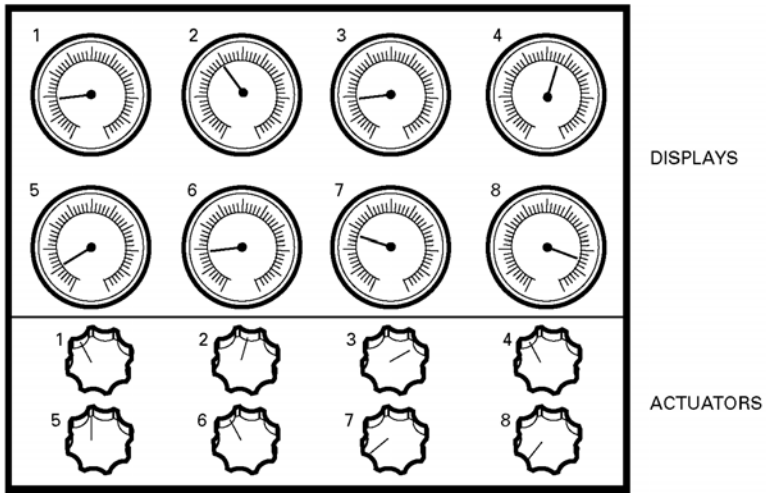

Figure 11.12 Controls and displays in rows

11.2.3-5 Multi-Row Displays with Single-Row Controls

Two or more rows of displays may be arranged above a single row of controls (see Figure 11.13).
Additional Information: Displays should be ordered left to right and top to bottom (in normal reading order), and matched to controls ordered left to right. Controls and displays should have corresponding labels.[0700]

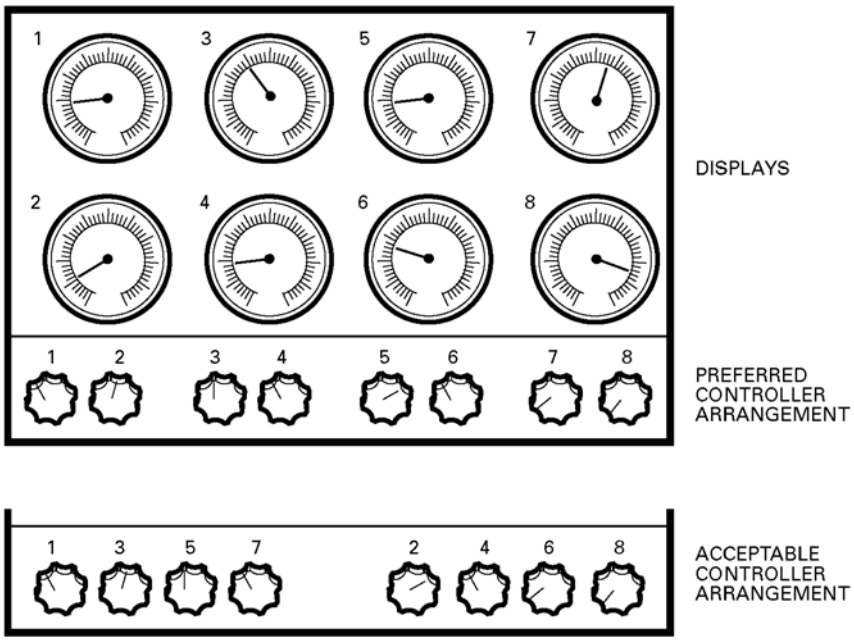

Figure 11.13 Two rows of displays with a single row of controls

11.2.3-6 Consistent Practice
Arrangements of functionally similar controls and displays should conform to the same convention throughout the control room.[0700]

11.2.3-7 Control/Display Packages
Modules should be selected and arranged to achieve maximum conformity with the principles described above.
Additional Information: When controls and related displays are assembled using modular packaged units, the design of the packages will limit the location and arrangement that can be achieved.[0700]

11.2.3-8 Separated Controls and Displays
Where displays are on separated panels, they should be on the adjacent upper panel from their associated controls.[0700]

11.2.3-9 Facing Panels
Related controls and displays should not be located on separate panels that face each other.[0700]

11.3.1.1-1 Need for Labeling

Controls, displays, and other equipment items that must be located, identified, or manipulated should be appropriately and clearly labeled to permit rapid and accurate human performance.[0700]

11.3.1.1-2 Hierarchical Scheme

A hierarchical labeling scheme should be used to reduce confusion, search time, and redundancy.
Additional Information: See Figure 11.14.[0700]

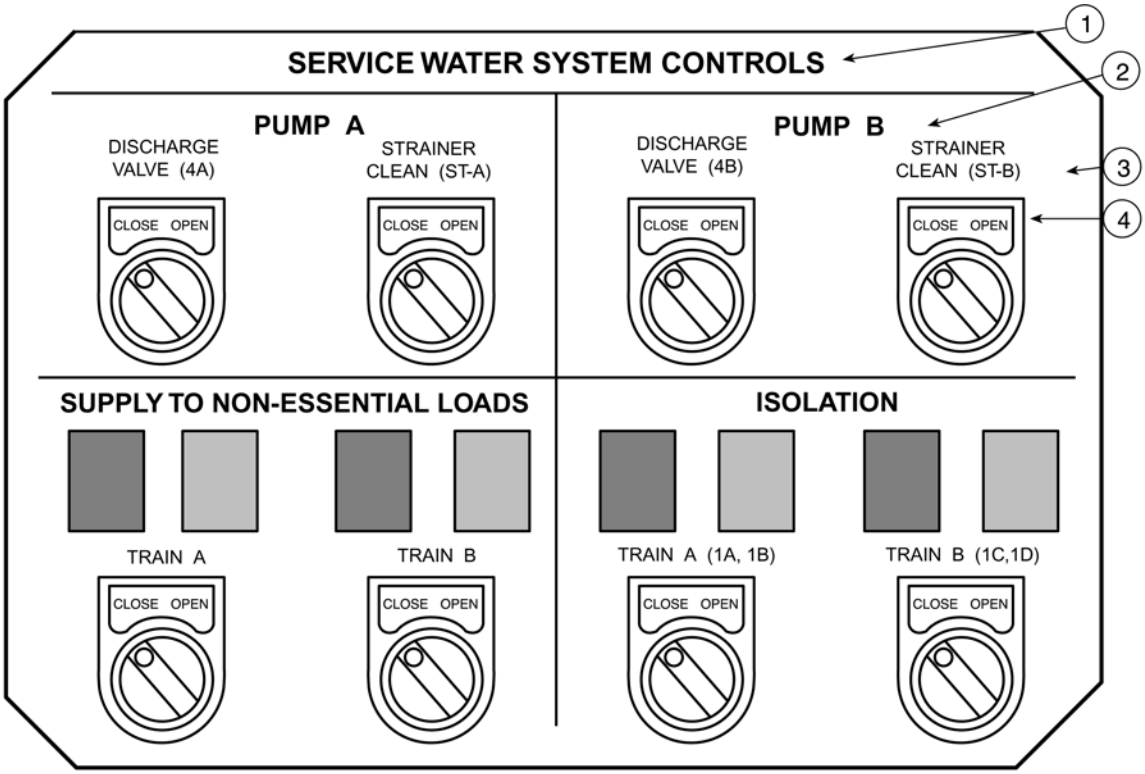

Label Designation and Location

1. System/workstation label, centered near top edge of panel
2. Subsystem/functional label, centered near top of subsection
3. Component label, above component display or control
4. Control position indicator, near control

Figure 11.14 Example of good panel labeling (numerals correspond to numbered items at bottom of figure)

11.3.1.1-3 Content of Hierarchical Labels
Major labels should be used to identify major systems or workstations, subordinate labels should be used to identify subsystems or functional groups, and component labels should be used to identify each discrete panel or console element.
Additional Information: Labels should not repeat information contained in higher-level labels.[0700]

11.3.1.1-4 Letter Size in Hierarchical Labels
Labels should be graduated in letter size such that system/work station labels are about 25 percent larger than subsystem/functional group labels, subsystem/functional group labels are about 25 percent larger than component labels, and component labels are about 25 percent larger than control position labels.[0700]

11.3.1.2-1 Normal Placement
Labels should be placed above the panel element(s) they describe.[0700]

11.3.1.2-2 Panel Labeling
The placement of labels on control panels should conform to the principles in Section 11.3.1.1, Labeling Principles.
Additional Information: See Figure 11.12.[0700]

11.3.1.2-3 Labeling Elements Above Eye Level
Labels for elements located above eye level should be positioned to ensure label visibility.[0700]

11.3.1.2-4 Proximity
Labels should be placed close to the panel element.[0700]

11.3.1.2-5 Labels on Controls
Labels should not appear on the control itself when an adjustment or manipulation is required that causes the user's hand to obscure the label for an extended time period.[0700]

11.3.1.2-6 Adjacent Labels
Adjacent labels should be separated by sufficient space so that they are not read as one continuous label.[0700]

11.3.1.2-7 Integrity
Labels should be mounted in such a way as to preclude accidental removal.[0700]

11.3.1.2-8 Surface
Labels should be mounted on a flat surface.[0700]

11.3.1.2-9 Horizontal Orientation
Labels should be oriented horizontally so that they may be read quickly and easily from left to right.
Additional Information: Although not normally recommended, vertical orientation may be used only where space is limited.[0700]

11.3.1.2-10 Curved Patterns
Curved patterns of labeling should be avoided.[0700]

11.3.1.2-11 Other Information Sources
Labels should not cover any other information source or detract from or obscure figures or scales that must be read by the user.[0700]

11.3.1.2-12 Concealment
Labels should not be covered or obscured by other units in the equipment assembly.[0700]

11.3.1.2-13 Controls
Labels should be visible to the user during control actuation.[0700]

11 WORKSTATION DESIGN
11.3 Labeling and Demarcations
11.3.1 Labels
11.3.1.2 Label Location

11.3.1.2-14 Cleaning
Administrative procedures should be in place for the periodic cleaning of labels.[0700]

11.3.1.3-1 Principal Function
Labels should describe the function of equipment items.
Additional Information: If needed for clarity, engineering characteristics or nomenclature may also be described.[0700]

11.3.1.3-2 Wording of Instruction Labels
The label should briefly and simply express the intended action.
Additional Information: Words on labels should be concise and still convey the intended meaning. Label text should not be so brief that its meaning is not clear to operating personnel. Instructions should be clear and direct.[0700]

11.3.1.3-3 Commonly Used Terms and Symbols
Terms, abbreviations, and symbols used on panel labels should have commonly accepted meanings for all intended users.
Additional Information: Unusual technical terms should be avoided. Use of Roman numerals should be avoided. Words should be spelled correctly. Abstract symbols should be used only if they have a commonly accepted meaning (e.g., %).[0700]

11.3.1.3-4 Distinguishability
Symbols should be unique and distinguishable from each other.
Additional Information: A commonly accepted standard configuration should be used.[0700]

11.3.1.3-5 Consistency
Labels should be consistent within and across panels in their use of words, acronyms, abbreviations, and part/system numbers.[0700]

11.3.1.3-6 Agreement with Procedures
There should be no mismatch between nomenclature used in procedures and that printed on the labels.[0700]

11.3.1.3-7 Administrative Control
A list of standard names, acronyms, abbreviations, and part/system numbers should be in place and administratively controlled.[0700]

11.3.1.3-8 Label Similarity
Words and abbreviations of similar appearance should be avoided where an error in interpretation could result.
Additional Information: When labels containing similar words, abbreviations, or acronyms are located in close proximity to each other, different words should be selected or means of coding should be used to reduce the probability of selecting the wrong control or reading the wrong display.[0700]

11.3.1.3-9 Functional Relationship
Labels should be used to identify functionally grouped controls or displays.[0700]

11.3.1.3-10 Label Location
Labels should be located above the functional groups they identify.[0700]

11.3.1.3-11 Control Position Labels
All discrete functional control positions should be identified.[0700]

11.3.1.3-12 Direction
Direction of motion (increase, decrease) should be identified for continuous motion rotary controls.[0700]

11.3.1.3-13 Visibility
Control position information should be visible to the user during operation of the control.[0700]

11.3.1.3-14 Access Opening Labeling
Access openings should be labeled to identify the functions of items accessible through them.[0700]

11.3.1.3-15 Danger, Warning, and Safety Instruction Labels
All danger, warning, and safety instruction labels should be in accordance with appropriate safety standards.[0700]

11.3.1.4-1 Necessity
Temporary labels should be used only when necessary.
Additional Information: If used, temporary labels should conform to good human engineering principles (see Guidelines 11.3.1.4-2 to 11.3.1.4-9).[0700]

11.3.1.4-2 Visibility
Temporary labels should not obscure prior permanent labels unless the old label is to be replaced.[0700]

11.3.1.4-3 Identification
Tag-out labels should clearly identify out-of-service components and equipment.[0700]

11.3.1.4-4 Mounting
Tag-outs should be securely affixed.[0700]

11.3.1.4-5 Obscuration
Tag-outs should not obscure the label associated with the non-operable device.[0700]

11.3.1.4-6 Activation
Tag-outs should be designed to physically prevent actuation of a control.[0700]

11.3.1.4-7 Adjacent Devices
Tag-outs should not obscure any adjacent devices or their associated labels.[0700]

11.3.1.4-8 Administrative Procedures
The use of temporary labels should be administratively controlled.[0700]

11.3.1.4-9 Review Procedures
The use and control of temporary labels should be periodically reviewed.
Additional Information: A review procedure should determine:

- when temporary labels are needed
- how they will be used
- content (given human engineering requirements)
- installation
- impact of their use on other system equipment (e.g., annunciators, mimics)
- documentation requirements
- re-training requirements
- their periodic review
- their removal. [0700]

11.3.1.5-1 Character Height

Character height should subtend a visual angle of 15 minutes (viewing distance multiplied by 0.004) as a minimum; a visual angle of 20 minutes (viewing distance multiplied by 0.006) is preferred.
Additional Information: Letter height should be identical for all labels within the same hierarchical level, based on the maximum viewing distance.[0700]

11.3.1.5-2 Contrast

Colors should be chosen for maximum contrast against the label background.
Additional Information: Table 11.2 rates various color combinations in terms of relative legibility. To ensure adequate contrast and prevent loss of readability because of dirt, dark characters should be provided on a light background. If colored print is used for coding purposes, it should conform to the established color coding scheme for the control room (see Section 1.3.8, Color).[0700]

Table 11.2 Relative legibility of color combinations

Legibility Rating	Color Combination
Very good	Black letters on white background
Good	Black on yellow
	Dark blue on white
	Grass green on white
Fair	Red on white
	Red on yellow
	White on black
Poor	Green on red
	Red on green
	Orange on black
	Orange on white

11.3.1.5-3 Character Selection

Labels should be prepared in capital letters with letters and numerals without flourishes or serifs.[0700]

11.3.1.5-4 Character Width

Letter width-to-height ratio should be between 1:1 and 3:5. Numeral width-to-height ratio should be 3:5 except for the numeral "4," which should be one stroke width wider, and the numeral "1," which should be one stroke in width.[0700]

11.3.1.5-5 Stroke Width
Stroke width-to-character height ratio should be between 1:6 and 1:8.[0700]

11.3.1.5-6 Spacing
The minimum space between characters should be one stroke width. The minimum space between words should be one character width. The minimum space between lines should be one-half of the character height.[0700]

11.3.2-1 Use
Lines of demarcation can be used to enclose functionally related controls and displays, and group related controls and displays (see Figure 11.15).[0700]

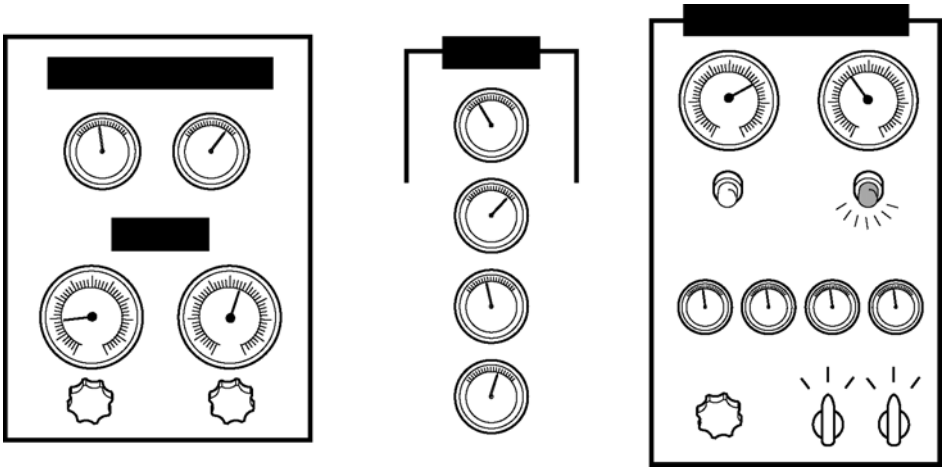

Figure 11.15 Demarcation lines

11.3.2-2 Contrast
Lines of demarcation should be visually distinctive from the panel background.[0700]

11.3.2-3 Permanence
Lines of demarcation should be permanently attached.[0700]

11.3.2-4 Consistency
The color coding scheme should be used consistently throughout the control room.
Additional Information: Refer to the guidelines in Section 1.3.8, Color, for specific recommendations on the use of color.[0700]

11.3.2-5 User Expectations
Color should be dedicated to specific functions or conditions throughout the control room in order for the code to elicit the expected user response.
Additional Information: Refer to the guidelines in Section 1.3.8, Color, for specific recommendations on the use of color.[0700]

11.4.1-1 Grouping by Task
Controls and displays should be assigned to work stations based on the tasks the user must carry out.
Additional Information: To the extent practical, this assignment should consider both normal and emergency procedures. It should be practical to perform all frequently occurring routine tasks, and time-sensitive emergency tasks, with a minimum of movement from panel to panel.[0700]

11.4.1-2 Grouping by System Function
Within the constraints of grouping by task sequence, controls and displays should be assigned to panels in functional groups related to system structure.
Additional Information: This grouping should promote easy understanding of the relationship between controls and system, and should assist graphic or pictorial display of system relationships.[0700]

11.4.1-3 Grouping by Importance and Frequency of Use
Controls and displays should be assigned to panels depending on their importance and frequency of use, within the constraints of grouping by task sequence and system function.[0700]

11.4.1-4 Less Important Controls/Displays
Controls or displays that are neither important to plant safety nor frequently used should be installed in ancillary panel locations.[0700]

11.4.1-5 Spacing
Spacing between groups should be at least the width of a typical control or display in the group.
Additional Information: Spacing consists of physically separating groups of components on a panel with enough space between groups so that the boundaries of each group are obvious.[0700]

11.4.1-6 Color Shading
When color shading is used, colors should provide adequate contrast and should be consistent with other color coding in the control room.
Additional Information: This practice is also known as 'color padding' or 'color blocking' (see Figure 11.16).[0700]

11.4.1-7 Emergency Controls
Distinctive techniques should be used to enhance the recognition and identification of emergency controls.
Additional Information: For example, a unique style of demarcation or color shading might be applied exclusively to emergency controls.[0700]

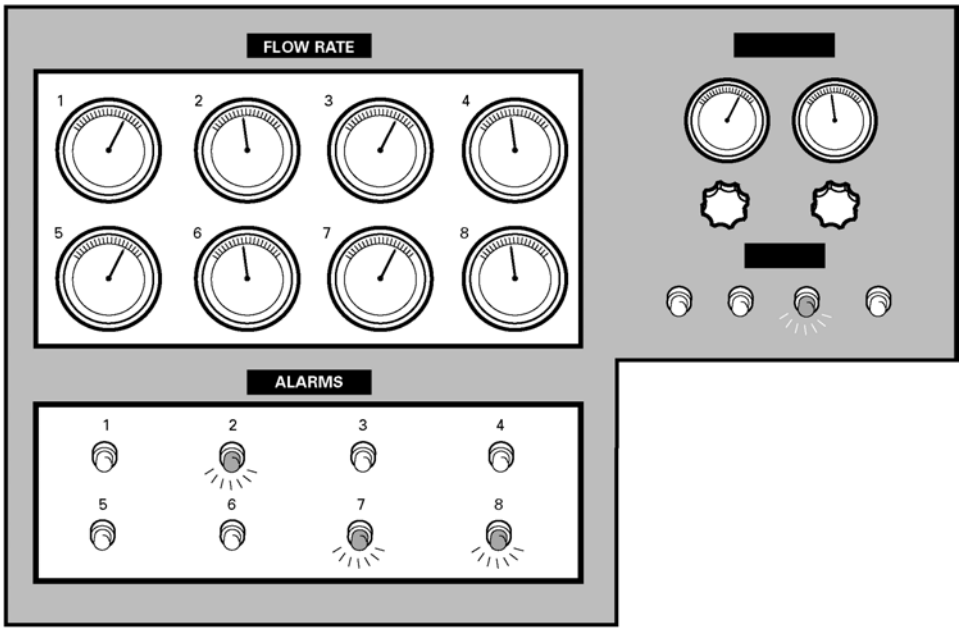

Figure 11.16 Color shading

11.4.2-1 Sequence
Controls and displays should be grouped together when they are observed/operated in a specified sequence.
Additional Information: Controls and displays should be positioned so that they are normally used in a left-to-right, top-to-bottom, or other natural sequence.[0700]

11.4.2-2 Frequency of Use
Frequently used controls and displays should be near the center of the preferred visual and manual areas.[0700]

11.4.2-3 Functional Considerations
Functionally related controls and displays should be grouped together when they are used together to perform tasks related to a specific function or are identical in purpose.[0700]

11.4.2-4 Order and Labeling
Components should be arranged left-to-right and/or top-to-bottom and identified in alphabetic or numeric sequence.
Additional Information: For example, four related displays in a row should be designated A,B, C, D or 1, 2, 3, 4; correspondingly, any controls related to these displays should also be designated A, B, C, D and 1, 2, 3, 4.[0700]

11.4.2-5 Other Expectations
Components should be arranged to match other user expectations when these can be identified.
Additional Information: Well-designed system mimics will help direct and satisfy user expectations.[0700]

11.4.2-6 Inter- and Intra-Panel Consistency
The location of arrangement of recurring functional groups and individual components of those groups should be similar from panel to panel or within a panel.[0700]

11.4.2-7 Repeated Functions
The layout of identical control or display sets should be consistent at all locations.[0700]

11.4.2-8 Mirror-Imaging
Layouts of repeated functions should not be mirror-imaged (see Figure 11.17).[0700]

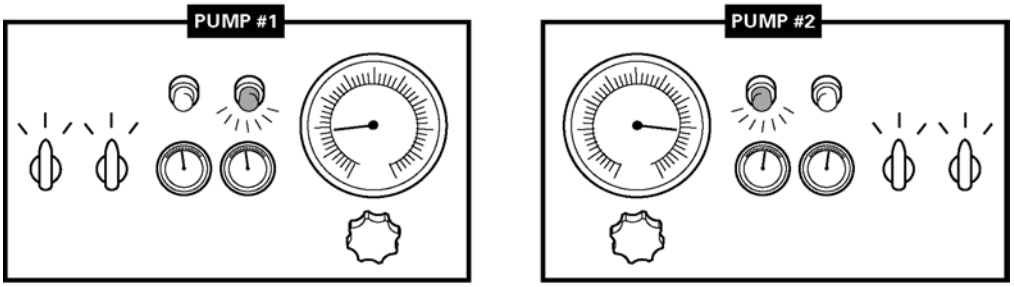

Figure 11.17 Example of a mirror-image arrangement of controls and displays

11.4.2-9 Panel-to-Panel Standardization

Standardization should be maintained where similar functions or panels are located at several workstations or units.[0700]

11.4.2-10 Simulator-to-Control Room Standardization

Standardization should be maintained where simulator or procedures trainers are used that simulate the actual operational equipment.[0700]

11.4.3-1 Access

Control access should not be impeded by any position of an adjacent control.
Additional Information: Recommended minimum separation distances for controls are shown in Table 11.3 and Figure 11.18. In most cases, control room operations will require greater separation.[0700]

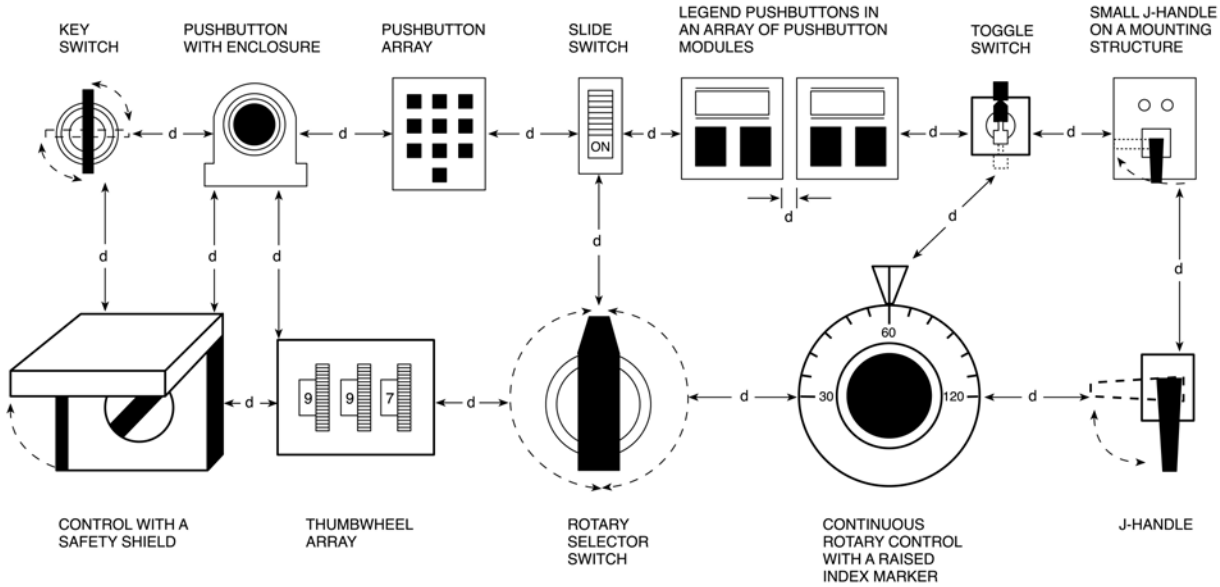

Figure 11.18 Measurement of minimum separation between controls (distances shown in Table 11.3)

11.4.3-2 Inadvertent Actuation

Control actuation should not result in inadvertent actuation of an adjacent control.[0700]

11.4.3-3 Simultaneous Actuation

It should be possible to simultaneously actuate adjacent controls (where required).[0700]

11.4.3-4 Orientation

Horizontal rows of displays should be used rather than vertical columns.[0700]

11.4.3-5 String Length

Strings of similar small displays should not exceed 20 inches on the control board.[0700]

11.4.3-6 Number of Components

No more than five similar components should be laid out in an unbroken row or column.
Additional Information: If more than five similar components must be laid out together, the string or cluster should be broken up by techniques such as physical spacing or demarcation.[0700]

11.4.3-7 Coordinate Axes for Matrices

Large matrices of similar components should have the coordinate axes labeled for identification of any single component within the grid.[0700]

11.4.3-8 Labeling Large Matrices

The left and top sides of large matrices should be used for labeling.[0700]

11.4.3-9 Demarcation of Large Matrices

Large matrices should be subdivided by appropriate demarcation.[0700]

Table 11.3 Minimum separation distances for controls (see Figure 11.18)

Minimum Separation in inches and (mm)

Controls	Key-Operated Controls	Pushbuttons	Pushbutton Arrays	Legend Switches	Slide Switches, Rocker Switches	Toggle Switches	Thumb-wheels	Rotary Selector Switches	Continuous Rotary Controls	J-Handles (large)	J-Handles (small)
Key-operated Controls	1.0 (25)	0.5 (13)	1.5 (38)	1.0 (25)	0.75 (19)	0.75 (19)	0.5 (13)	0.75 (19)	0.75 (19)	5.0 (127)	2.0 (50)
Pushbuttons	0.5 (13)	0.5 (13)	2.0 (50)	2.0 (50)	0.5 (13)	0.5 (13)	0.5 (13)	0.5 (13)	0.5 (13)	6.0 (152)	3.0 (76)
Pushbutton Arrays[1]	1.5 (38)	2.0 (50)	2.0 (50)	2.0 (50)	1.5 (38)	1.5 (38)	1.5 (38)	2.0 (50)	2.0 (50)	6.0 (152)	3.0 (76)
Legend Switches[2]	1.0 (25)	2.0 (50)	2.0 (50)	2.0 (50)	1.5 (38)	1.5 (38)	1.5 (38)	2.0 (50)	2.0 (50)	6.0 (152)	3.0 (76)
Slide Switches, Rocker Switches	0.75 (19)	0.5 (13)	1.5 (38)	1.5 (38)	0.5 (13)	0.75 (19)	0.5 (13)	0.5 (13)	0.5 (13)	5.0 (127)	2.0 (50)
Toggle Switches	0.75 (19)	0.5 (13)	1.5 (38)	1.5 (38)	0.75 (19)	0.75 (19)	0.5 (13)	0.75 (19)	0.75 (19)	6.0 (152)	3.0 (76)
Thumbwheels	0.5 (13)	0.5 (13)	1.5 (38)	1.5 (38)	0.5 (13)	0.5 (13)	0.5 (13)	0.75 (19)	0.75 (19)	5.0 (127)	2.0 (50)
Rotary Selector Switches	0.75 (19)	0.5 (13)	2.0 (50)	2.0 (50)	0.5 (13)	0.75 (19)	0.75 (19)	1.0 (25)	1.0 (25)	5.0 (127)	2.0 (50)
Continuous Rotary Controls	0.75 (19)	0.5 (13)	2.0 (50)	2.0 (50)	0.5 (13)	0.75 (19)	0.75 (19)	1.0 (25)	1.0 (25)	5.0 (127)	2.0 (50)
J-Handles (large)	5.0 (127)	6.0 (152)	6.0 (152)	6.0 (152)	5.0 (127)	6.0 (152)	5.0 (127)	5.0 (127)	5.0 (127)	3.0 (76)	5.0 (127)
J-Handles (small)	2.0 (50)	3.0 (76)	3.0 (76)	3.0 (76)	2.0 (50)	3.0 (76)	2.0 (50)	2.0 (50)	2.0 (50)	5.0 (127)	1. 0

[1] Pushbuttons within an array, 0.75 inches center-to-center.
[2] Legends switches within an array, no minimum distance, but should be separated by a barrier. Barrier should be at least 0.125 inches wide, 0.183 inches high, with rounded edges. Legend switches manufactured as elements of a module or modular array may be mounted as closely as engineering consideration permit. Toggle switches arrayed in a horizontal line, 0.75 inches center-to-center.

SECTION 12: WORKPLACE DESIGN

12 WORKPLACE DESIGN

Workplaces are facilities that house workstations and other task-support equipment and provide the environment in which personnel perform their tasks, e.g., the main control room, remote shutdown station, and local control stations.

CONTROL ROOM

Two important aspects of a control room are its configuration (i.e., the arrangement of workstations and other equipment within it) and its environment. The important characteristics of each are described below. Many of these characteristics are also applicable to other workplaces, such as the remote shutdown station, technical support center, and emergency operations facility.

Control Room Configuration

Control room configuration refers to the overall layout and arrangement of the control room; it comprises the following factors:

Accessibility of instrumentation/equipment

Accessibility refers to the ease with which control room personnel can gain access to needed instrumentation and equipment. Any instrumentation and equipment needed by control room personnel for detecting abnormal conditions and shutting down the plant, but which are not located inside the control room, should be identified. Similarly, the controls and displays required for continuous monitoring and the timing of control actions that are not located in the primary operating area of the control room should be identified. Review guidelines are provided in Section 12.1.1.1.

Consistency of staffing with equipment layout

This refers to factors that may affect the adequacy of personnel staffing levels, including: the ability of control room personnel to monitor and operate all necessary controls, displays, and other equipment during all modes of plant operation (e.g., consistency of the control room layout with staffing levels and task assignments); the ability of additional onsite or offsite personnel to augment the normal crew complement under certain unusual conditions, such as refueling (e.g., consistency of control room layout with anticipated activities and task assignments); the ability to limit access and movement of nonessential but authorized personnel to prescribed areas within the control room (e.g., adequate designations of prescribed areas; doors, gates, and other physical barriers). Review guidelines are provided in Section 12.1.1.2.

Furniture, instrumentation and equipment layout

The arrangement of furniture, instrumentation, and equipment in the control room that might affect the operators' requirements for viewing, communication, accessibility, and movement. Review guidelines are provided in Section 12.1.1.3.

Document organization and storage

Review guidelines are provided in Section 12.1.1.4 for the availability, storage, and accessibility of procedures and other documents needed for ready reference.

Spare parts, operating expendables, and tools

Guidelines provided in Section 12.1.1.5 address the availability, storage, and accessibility of spare parts, operating expendables, and tools needed by personnel.

Supervisor access

The accessibility of the shift supervisor's office by walking and communication links is addressed by review guidelines in Section 12.1.1.6.

Multiunit control rooms

The characteristics of multi-unit control rooms that may affect personnel performance include whether or not the control room has a mirror-image design, design factors that distinguish the operating units, equipment layout that might affect personnel movement and communication. Review guidelines are provided in Section 12.1.1.7.

Emergency equipment and protective clothing

If personnel are required to wear protective clothing in the workplace, then this clothing should be considered, along with warning systems that signal the need for its use, and storage for protective clothing. Review guidelines are provided in Section 12.1.1.8.

Personal storage

Provisions for storing personal items (e.g., coats and other belongings) can help maintain a clutter-free work environment. Storage places, including those located outside on the control room such as lockers, should be addressed. Review guidelines are provided in Section 12.1.1.9.

Ambience and comfort

Eating, restroom, and lounge facilities contribute to the operators' comfort, health, and performance. Review guidelines are provided in Section 12.1.1.10.

Control Room Environment

Environmental factors that can have important effects on operators' performance include thermal comfort, illumination, the auditory environment, and facility layout.

Thermal comfort

Thermal comfort includes temperature, humidity, and ventilation. Guidelines for these topics are provided in Sections 12.1.2.1 and 12.1.2.2.

Illumination

Illumination encompasses general illumination levels (i.e., for the main operating area and auxiliary areas) and specific levels for particular areas, such as workstations, individual control and display devices, and areas used for reading and writing; emergency lighting systems intended for special operating conditions are also included. Review guidelines for general control room illumination are provided in Section 12.1.2.3; guidelines for emergency lighting are in Section 12.1.2.4.

Auditory environment

The auditory environment includes the background noise level and the reverberation and sound absorption characteristics of the workplace. Review guidelines for the control room environment are provided in Section 12.1.2.5.

LOCAL CONTROL STATIONS

A local control station is a place outside of the main control room where operators interact with the plant. Local control stations may include multifunction workstations and panels, as well as operator interfaces, such as controls (e.g., valves, switches, and breakers) and displays (e.g., meters and VDUs). They have

many characteristics in common with the main control room. However, they may also have unique characteristics when located in environments that are not as controlled as the main control room. For example, local control stations may have higher levels of background noise and more demanding conditions for use than the main control room. Accordingly, they may have a diverse range of communication media, such as loudspeakers, public address/pager stations, and two-way communication systems (e.g., telephones and walkie-talkies). In addition, these media may have special administrative controls that regulate their use. Review guidelines for local control stations are provided in Section 12.2.

12 WORKPLACE DESIGN
12.1 Control Room
12.1.1 Control Room Configuration
12.1.1.1 Accessibility of Instrumentation/Equipment

12.1.1.1-1 Present in the Control Room
Control room instrumentation and equipment should include all controls and displays needed for (1) detection of abnormal conditions, and (2) bringing the plant to a safe shutdown condition.[0700]

12.1.1.1-2 Arranged to Facilitate Coverage
Users should not have to leave their principal work areas to attend to instrumentation on back panels during operational sequences in which continuous monitoring or the timing of control actions may be critical.[0700]

12 WORKPLACE DESIGN
12.1 Control Room
12.1.1 Control Room Configuration
12.1.1.2 Consistency of Staffing with Equipment Layout

12.1.1.2-1 Coverage
Control room staffing and task assignments should ensure complete and timely coverage of controls, displays, and other equipment required during all modes of operation.[0700]

12.1.1.2-2 Utilization of Additional Personnel
When additional onsite or offsite personnel are needed to augment the normal crew complement under certain conditions (e.g., refueling), activities, and task assignments should be planned to ensure proper coordination.
Additional Information: Special training for this situation may be required.[0700]

12.1.1.2-3 Nonessential Personnel
Provision should be made to limit the access and movement of nonessential but authorized personnel to prescribed areas within the control room.[0700]

12.1.1.3-1 Viewing
Desks and consoles should permit users at those desks and consoles full view of all control and display panels (including alarm displays) in the main control room.
Additional Information: Placement and spacing of equipment depends on control room configuration, staffing, and other design features. Thus, guidelines are stated in terms of minimum spacing considerations for common equipment arrangements and use situations. Maintenance and testing of equipment has not been considered, and may require larger clearances than the minimums suggested.[0700]

12.1.1.3-2 Communications
Desk and console placement should facilitate voice communications from users seated at those workstations to any point in the main operating area.[0700]

12.1.1.3-3 Access to Workstations
Users should be able to get to any workstation without having to overcome obstacles such as tripping hazards, poorly positioned filing cabinets or storage racks, and maintenance equipment.
Additional Information: Users should be able to position themselves conveniently for performing task actions at any work station.[0700]

12.1.1.3-4 Circulation Patterns
The control room arrangement should facilitate efficient, unobstructed movement and communication.
Additional Information: The control room arrangement should minimize interference between the members of the operational crew.[0700]

12.1.1.3-5 Maneuvering Space
Adequate space should be allowed between the back (user's position) of a desk or console and any surface or fixed object behind the user for the user to get into and out of a chair freely or to turn in the chair to view the equipment behind.
Additional Information: A minimum separation of 36 inches from the back of any desk to any opposing surface is suggested as the minimum (see Figure 12.1). A greater separation is preferable. Lateral space for a seated user should be no less than 30 inches; greater latitude is preferable. Placement and spacing of equipment depends on control room configuration, staffing, and other design features. Thus, guidelines are stated in terms of minimum spacing considerations for common equipment arrangements and use situations. Maintenance and testing of equipment has not been considered, and may require larger clearances than the minimums suggested.[0700]

12.1.1.3-6 Equipment-to-Opposing-Surface Distance
Enough space should be allowed so that personnel can perform all required tasks.
Additional Information: The space should accommodate kneeling and bending, simultaneous work by more than one person, and simultaneous performance of operational and maintenance tasks as required. Recommended minimum separations are illustrated in Figure 12.2. A minimum separation of 50 inches is recommended between a single row of equipment/panel and a wall or other opposing surface. A minimum separation of 50 inches is also recommended between two rows of facing equipment if both rows are worked by a single person. A minimum separation of 8 feet is recommended between opposing rows of equipment where more than one person must work simultaneously on operational or maintenance tasks, and kneeling, bending, or use of test equipment may be necessary.[0700]

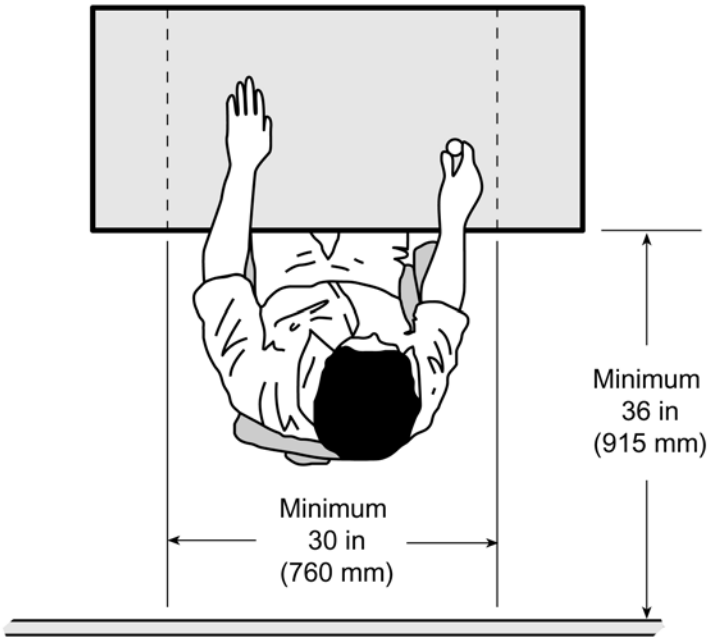

Figure 12.1 Spacing of equipment to accommodate seated users

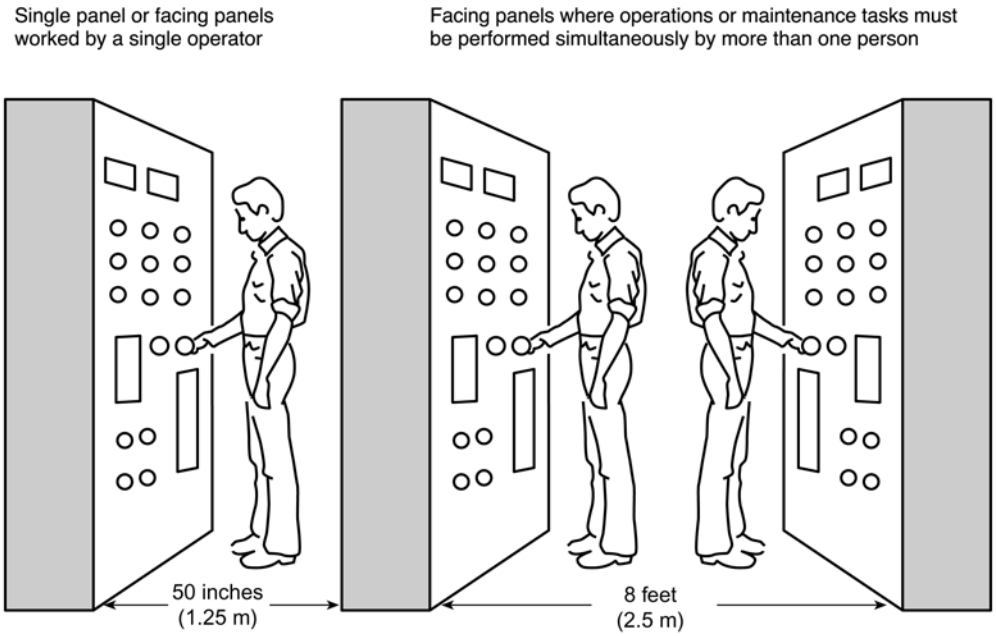

Figure 12.2 Equipment-to-equipment distances: single person and more-than-one-person spaces

12.1.1.3-7 Openings

Panels should be laid out and maintained, and equipment enclosures designed, so that there are no unguarded openings through which unwanted objects can be introduced.[0700]

12.1.1.4-1 Accessibility
All procedures and other documents that may be needed for ready reference should be kept in the control room in places where they are easy to locate and extract for use.
Additional Information: Reference documents should not be locked up, or stored in places too low or too high for large or small personnel to access easily, in cramped spaces, or where poor illumination exists.[0700]

12.1.1.4-2 Location Aids
Clearly visible title labels should be provided to identify specific documents. Labels should distinguish documents as much as possible.
Additional Information: Putting many volumes in one location creates a search problem, especially if titles are similar. One means of reducing search time would be to put operational documentation in one location and other documentation in a secondary location.[0700]

12.1.1.4-3 Convenience of Use
Documents should not be fixed in racks; it should be possible to remove documents for use.[0700]

12.1.1.4-4 Bound Documents
Documents should be bound so that they can be opened fully and will remain open at the desired place without holding.[0700]

12.1.1.4-5 Protection
Documents should be protected from wear so that they do not become dog-eared, dirty, loose, torn, and difficult to read.[0700]

12.1.1.4-6 Dedicated Sets of Procedures
Sets of procedures should be stored separately for each unit in a multiunit control room.[0700]

12.1.1.5-1 Supply
There should be an adequate supply of expendables and spare parts (e.g., fuses, bulbs, ink and inking pens, recorder charts, and printer paper).
Additional Information: Spare parts, such as indicator lamps, and any tools that are needed by operating personnel should be stored in suitable, designated space(s) within the control room.[0700]

12.1.1.5-2 Accessibility
Expendables and spare parts should be readily accessible.[0700]

12.1.1.5-3 Tools
All necessary or special replacement tools should be available as needed to install expendables and spare parts.[0700]

12.1.1.5-4 Storage Space
There should be adequate storage space for expendables and spare parts.[0700]

12.1.1.5-5 Coding
When different types, sizes, or styles of expendables and spare parts are required, they should be clearly and distinctively marked to avoid misapplication.[0700]

12.1.1.5-6 Inventory
Records should be kept as to the status of expendables and spare parts.[0700]

12 WORKPLACE DESIGN
12.1 Control Room
12.1.1 Control Room Configuration
12.1.1.6 Supervisor Access

12.1.1.6-1 Access
The shift supervisor's office should be located so as to permit prompt physical access to the control room under all conditions, including control room isolation.
Additional Information: The preferred location is within the control room isolation boundary, with placement to permit good visual and voice contact with the main operating area.[0700]

12.1.1.6-2 Communications
Dedicated communications links should be provided between the main operating area and the shift supervisor's office when the shift supervisor's office is not within the control room boundary.[0700]

12 WORKPLACE DESIGN
12.1 Control Room
12.1.1 Control Room Configuration
12.1.1.7 Multiunit Control Rooms

12.1.1.7-1 Equipment Arrangement
Equipment should be arranged with movement and communication patterns in mind so that unit operations do not interfere with each other.[0700]

12.1.1.7-2 Senior Operator Station
Senior operators who supervise and assist operations of more than one unit should be stationed so that they can communicate effectively with operators in each unit and have an unobstructed visual path to the control boards of each unit.[0700]

12.1.1.7-3 Sharing of Personnel
Where operators may assist those of another unit, potential task loading should be evaluated to assure that each unit can be covered adequately in all situations.[0700]

12.1.1.7-4 Sharing of Procedures
Each unit should have its own set of procedures and other reference documents as required to make sure that references are easily available to personnel in each unit, and to avoid conflicting needs for the same reference.[0700]

12.1.1.7-5 Shared Equipment
When control of some plant equipment is shared by the control rooms of multiple-unit nuclear power plants, care must be taken to ensure that status and availability data for this equipment are available in each control room, and that equipment operation from the control room for one unit will not affect other unit operations.
Additional Information: Control of plant equipment from one control room should not affect the ability of operators of other control rooms to maintain control of their respective units. The status of plant equipment under the control of one control room should be displayed in all control rooms capable of controlling that equipment. If control of plant equipment from one control room renders that equipment unavailable to other control rooms, availability status indications should be displayed in all control rooms. A single, centrally located control panel/console may be used for dual-unit control rooms within the same isolation boundary when this design does not conflict with the panel layout and control-display integration guidelines of Section 11.2. Administrative procedures should be in place that assign responsibility for allocation of use of controls of shared plant equipment to a single control room.[0700]

12.1.1.7-6 Dedicated Crews
When mirror image control rooms exist, operational crews should be committed to one or the other unit and should not be allowed to alternate between the two mirrored units.
Additional Information: This includes crews staffing a single center-desk station. Some control rooms are designed with the control boards of two units laid out symmetrically, side-by-side, so that one is a complete or nearly complete reversal of the other. Operators who work both units have to deal with two opposite patterns of controls and displays, and must reorient their expectations completely when they switch from unit to unit. This requirement violates the principle of positive transfer of training and is highly unfavorable for task performance reliability. The potential for confusion is greater when the reversal is incomplete (e.g., control boards mirror imaged, but annunciator panels arranged identically in both units).[0700]

12.1.1.7-7 Accentuate Differences

The distinction between the mirrored units should be heightened as much as possible so that there will be no confusion about where one unit ends and the other begins.

Additional Information: In addition to using labeling, distinctiveness can be increased by using a different color scheme for the elements of each unit, including carpeting, desks, and other work station equipment, as well as the board surface areas.[0700]

12.1.1.8-1 Types of Equipment
Protective equipment should include protective clothing and breathing apparatus.[0700]

12.1.1.8-2 Anthropometry
Protective clothing and breathing equipment should be compatible with users' body sizes and tasks to provide adequate tactile sensitivity and ability to see, reach, move, communicate, and hear.[0700]

12.1.1.8-3 Periodic Checks
Protective equipment should be periodically checked to determine if it is in good condition.[0700]

12.1.1.8-4 Quantity
There should be protective equipment available in sufficient quantities and sizes for the required number of users.[0700]

12.1.1.8-5 Marking
Protective clothing sizes should be clearly identifiable.[0700]

12.1.1.8-6 Expendables
There should be an adequate supply of personal protection equipment expendables, such as filters.[0700]

12.1.1.8-7 Accessibility
All protective equipment should be easily and readily accessible.[0700]

12.1.1.8-8 Training
Personnel should be well practiced in donning protective equipment.[0700]

12.1.1.8-9 Procedures
Instructions for donning, doffing, and controlling personal protective equipment should be provided.[0700]

12.1.1.8-10 Periodic Checks
All equipment should be periodically checked to determine if it is in good condition.[0700]

12.1.1.8-11 Accessibility
All equipment should be easily and readily accessible.[0700]

12.1.1.8-12 Training
Personnel should be trained in the use of all emergency equipment.[0700]

12.1.1.8-13 Procedures
There should be a written, administratively approved procedure for each type of emergency or combination of emergencies.[0700]

12.1.1.8-14 Automatic Warning System
There should be an automatic fire warning system for control room fires.[0700]

12 WORKPLACE DESIGN
12.1 Control Room
12.1.1 Control Room Configuration
12.1.1.8 Emergency Equipment

12.1.1.8-15 Proper Storage
Provision should be made for the orderly storage in the control room of emergency equipment that is needed by control room personnel.[0700]

12.1.1.8-16 Storage Locations
The storage location(s) may be away from the main operating area but should be accessible, clearly marked, and known to all personnel.[0700]

12 WORKPLACE DESIGN
12.1 Control Room
12.1.1 Control Room Configuration
12.1.1.9 Personal Storage

12.1.1.9-1 Storage Locations
There should be a suitable, out-of-the-way, but secure place in which control room personnel may keep their coats and other personal belongings.[0700]

12.1.1.9-2 Storage Suitability
If lockers are provided, they should be large enough to hold the items that might reasonably be expected to require storage.[0700]

12 WORKPLACE DESIGN
12.1 Control Room
12.1.1 Control Room Configuration
12.1.1.10 Ambience and Comfort

12.1.1.10-1 Decor
Decor should create a pleasant working environment in the control room.
Additional Information: Features to be considered include:

- Color coordination
- Use of color and lighting to create a cheerful atmosphere (without introducing glare and brightness to a degree that causes eye fatigue or an overly intense atmosphere)
- Visual relief from arrays of instrumentation
- Comfortable seating
- Carpeting to lessen the fatigue of standing and walking. [0700]

12.1.1.10-2 Restroom and Eating Facilities
A restroom and kitchen or eating area should be provided within (preferably) or near the control room isolation boundary.
Additional Information: Since formal breaks are not scheduled in most control rooms, it is important that personnel have access to these facilities without delay. It is preferable that they be used only by control room personnel. Provision should be made for communication if facilities are out of voice contact, so that an operator taking a break can be contacted as necessary by personnel in the control room (see Guideline 10.2.6-2).[0700]

12.1.1.10-3 Rest Area/Lounge
Consideration should be given to providing a rest area (possibly in conjunction with the eating area) conducive to relaxation and revitalization, especially where shifts are long.[0700]

12.1.1.11-1 Shared Information and Control Functions
The HSI design should maximize the ability of users to share information and control functions among crew members if users are required to share the responsibilities for monitoring and control.[6546]

12.1.1.11-2 Indication of Shared Control Capability
If a control function is shared among users but only one user can operate it at a time, then a clear, unambiguous indication should be provided identifying which user has the control capability.[6546]

12.1.1.11-3 Indication of Override of Shared Control Capability
A clear, unambiguous indication should be provided prior to overriding the use of a shared control.
Additional Information: An override capability allows one user to take the control capability of a shared control from another user. If such an override capability exists, then a clear indication should be provided prior to each override so that users are aware of the pending change.[6546]

12.1.1.11-4 Shared Display Devices
When a display device is viewed by more than one person, its use should be regulated.
Additional Information: The system should not permit one user to remove a display that is still needed by another user, or to present a display that may interfere with another user's activities.[6546]

12.1.1.11-5 User-Configured Displays
When a display device can be configured by more than one user, the system should support the coordinated use of the displays.
Additional Information: Users may modify display pages to address particular task needs or personal preferences. For example, a user may be able to select plant variables to be included in or excluded from the display page, define coding for displayed items, and define axes and scales for plots. When multiple users can manipulate the same displays, coordination may be needed to ensure that they are aware of the current content. In addition, mechanisms are needed to ensure that displays created by one user are not changed or eliminated by other users. Possible solutions include password protection, special directories for storing these displays, and administrative procedures.[6546]

12.1.1.11-6 Soft Controls with Multiple Access
The system should make each user aware of control inputs made by others, and ensure that the control actions of one user are not unknowingly reversing another user's actions.
Additional Information: Some input interfaces for controlling plant variables can be accessed from multiple locations in the HSI. Some process plants with computer-based HSIs address this problem by assigning control capabilities for a plant variable to a particular control console. Users at other consoles can observe the control setting but cannot initiate changes.[6546]

12.1.1.12-1 Consistent System Response
The system's interpretation of a user input should not change as a result of an upgrade.
Additional Information: For example, a given keystroke should not produce a benign action in one version of the system software and a destructive action, such as erasing data, in a subsequent version.[6546]

12.1.1.12-2 Existing Skills Preserved
Changes to HSI hardware or software should not force users to have to unlearn existing skills.
Additional Information: It is better for an upgrade to require the user to learn additional skills rather than expect the user to change existing ones. Thus, changes in the information presented by the system (e.g., messages, graphic symbols) are less difficult to adapt to if they do not require users to modify their skills or strategies. For example, changes limited to physical appearance do not typically serious disrupt users' performance, whereas changes in the operation of the system almost certainly will. However, sometimes the appearance of a system is strongly linked to user skills. For example, the layout of tools on the palette of a drawing program should not be changed in subsequent versions. Users who rely on spatial memory for retrieving tools from the palette will find that this skill leads them to select the wrong tool.[6546]

12.1.1.12-3 Salient Changes
If changes must be made to the HSI, they should be salient.
Additional Information: Drawing the user's attention to characteristics that have changed can help them to adapt their skills. For example, injecting a single new word into a message is not recommended. Adding the word 'not' to a question, such as "Do you want to save these settings?" will change the meaning of the message. However, it may not be detected by the user until an error occurs. Many actions become automatic as users become skilled in using the interface. If HSI changes are obvious, users may be able to block their automatic responses and develop new ones.[6546]

12 WORKPLACE DESIGN
12.1 Control Room
12.1.2 Control Room Environment
12.1.2.1 Temperature and Humidity

12.1.2.1-1 Comfort Zone
The climate control system should maintain temperatures of 68-75°F in winter and 73-79°F in summer and relative humidity levels between 30% and 60%.
Additional Information: The temperature ranges given are based on the ASHRAE summer and winter comfort zones as specified in ASHRAE 55-1992. In the summer comfort zone, workers wearing light clothing will be comfortable; in the winter comfort zone, workers wearing heavy indoor clothing (e.g., sweaters) will be comfortable. The range of relative humidity given is based on ASHRAE 62 and is narrower than that currently specified in ASHRAE 55. The comfort zones assume sedentary work; personnel performing 'light work' (e.g., actively monitoring spatially distributed equipment, or retrieving procedures or manuals) will be comfortable at lower temperatures. Air movement rates less than 50 ft/min are also assumed.[0700, 5680]

12.1.2.1-2 Temperature Differential
Air temperature at floor level and at head level should not differ by more than 10°F.[0700]

12 WORKPLACE DESIGN
12.1 Control Room
12.1.2 Control Room Environment
12.1.2.2 Ventilation

12.1.2.2-1 Air Quantity
The ventilation system should be capable of introducing fresh air into the control room at a rate of at least 20 cubic feet per minute per occupant.[0700, 5680]

12.1.2.2-2 Air Velocity
Air velocities in the main operating area should not exceed 45 feet per minute measured at head level and should not produce a noticeable draft.[0700]

12.1.2.3-1 Illumination Levels

The illumination levels should be consistent with those listed in Table 12.1.
Additional Information: The values in the table are preferred levels based on conservative assumptions about the reflectance of the task background, the age of the operator, and the criticality of the task being performed. Lower illuminances may be justified for more favorable visual conditions or where the need to perform critical tasks can be ruled out.[0700, 5680]

Table 12.1 Nominal illumination levels for various tasks and work areas

Work Area or Type of Task	Task Illuminance, footcandles
Panels, primary operating area	50
Auxiliary panels	50
Scale indicator reading	50
Seated operator stations	100
Reading:	
- handwritten (pencil)	100
- printed or typed	50
- VDU	10
Writing and data recording	100
Maintenance and wiring areas	50
Emergency operating lighting	10
(Source: adapted from NUREG/CR-5680, Tables 6.2 and 6.3)	

12.1.2.3-2 Uniformity

The level of illumination should not vary greatly over a given work station.[0700]

12.1.2.3-3 Supplemental Light

Supplemental lighting should be provided for personnel performing specialized visual tasks in areas where fixed illumination is not adequate.[0700]

12.1.2.3-4 Task Area Luminance Ratios

To ensure effective visual performance, the task area luminance ratios in Table 12.2 should not be exceeded.
Additional Information: To determine task lighting requirements, it is necessary to consider the levels of lighting that surround a task. Great disparities between task and background lighting can lead to adaptation problems.[0700]

Table 12.2 Maximum task area luminance ratios

Areas	Luminance Ratio
Task area versus adjacent darker surroundings	3:1
Task area versus adjacent lighter surroundings	1:3
Task area versus more remote darker surfaces	10:1
Task area versus more remote lighter surfaces	1:10
Luminaires versus surfaces adjacent to them	20:1
Anywhere within normal field of view	40:1

12.1.2.3-5 Shadows
To reduce fatigue and eyestrain, shadows should be avoided.
Additional Information: Ambient illumination should be provided via indirect or diffuse lighting. Labels, instructions, and other written information should not be in shadowed positions.[0700]

12.1.2.3-6 Glare
Glare should not interfere with the readability of displays, labels, or indicators.
Additional Information: Glare increases the probability that an individual will misread a display or will fail to notice displayed information. Glare can also produce discomfort. Direct sources of glare include light emitted from luminaires, indicators, and displays. Indirect sources of glare include reflected light from all surfaces, e.g., paint, metal, and glass. The surface of a VDU screen should reduce reflections. Positioning of VDUs relative to light source affects glare as can use of a shield or filter on the VDU or light source. If glare reduction or contrast enhancement techniques are used, they should not violate the requirements of luminance, contrast, and resolution as stated in this document.[0700, 5908]

12.1.2.3-7 Reflectance
Reflectance should conform to the recommendations shown in Table 12.3.
Additional Information: The amount of light reflected from a surface depends on its color; typical reflectance values for various colors are given in Table 12.4. Surfaces adjacent to a VDU should have a dull matte finish to reduce glare. The luminance range of surfaces immediately adjacent to VDUs should be between 10 percent and 100 percent of screen background luminance.[0700, 5908]

12.1.2.3-8 Color
Surface colors should be recognizable under both normal and emergency lighting conditions.
Additional Information: Some types of lamps (e.g., mercury or sodium lamps) have very poor color rendering properties. Such lamps should not be used for normal or emergency lighting if the ability to distinguish among colors may be important.[0700, 5680]

12.1.2.3-9 Ambient Illumination and VDUs
The ambient illumination in the VDU area that is necessary for other visual functions (e.g., setting controls, reading instruments) should not degrade the visibility of signals on the VDU.[5908]

Table 12.3 Recommended workplace reflectance levels

Surface	Reflectances	
	Preferred	Permissible
Ceiling[a]	80%	60-95%
Upper Wall	50%	40-60%
Lower Wall	15-20%	
Instruments/Displays	80-100%	
Cabinets/Consoles	20-40%	
Floor	30%	15-30%
Furniture	35%	25-45%

[a] Recommended reflectances are for finish only. Overall average reflectance of acoustic materials may be somewhat lower. The upper walls (one to two feet below the ceiling) may be painted with the same paint as is used on the ceiling.

12.1.2.3-10 Use of Colored Ambient Illumination

Colored ambient illumination should not be used if color coding is used in the workplace.
Additional Information: Colored lighting will interfere with color-coded VDU displays and other color coding. Some types of lamps (e.g., mercury or sodium lamps) have very poor color rendering properties. Such lamps should not be used for normal or emergency lighting if the ability to distinguish among colors may be important.[5908, 5680]

12.1.2.3-11 Illuminance of Areas Immediately Surrounding VDUs

There should be no light source (direct or reflected) in the immediate surrounding area of the VDU that is of greater luminance than the VDU.[5908]

Table 12.4 Surface color reflectance values

Color	Reflectance
White	85
Light::	
Cream	75
Gray	75
Yellow	75
Buff	70
Green	65
Blue	55
Medium:	
Yellow	65
Buff	63
Gray	55
Green	52
Blue	35
Dark:	
Gray	30
Red	13
Brown	10
Blue	8
Green	7
Wood Finish:	
Maple	42
Satinwood	34
English Oak	17
Walnut	16
Mahogany	12

12 WORKPLACE DESIGN
12.1 Control Room
12.1.2 Control Room Environment
12.1.2.4 Emergency Lighting

12.1.2.4-1 Automatic Action
A control room emergency lighting system should be automatically activated and immediately available upon failure of the normal control room lighting system.
Additional Information: This system should be independent of any other plant lighting system that is available in the control room.[0700]

12.1.2.4-2 Operability
Failure of the normal control room lighting system should not degrade operability of the emergency lighting system.[0700]

12.1.2.4-3 Emergency Lighting Levels
The control room emergency illumination system should be designed to provide a minimum illumination level of 10 footcandles at all work stations in the main operating area.
Additional Information: Higher levels of illumination are preferred if the room's surfaces are of low reflectivity or the occupants of the room are over 40 years of age.[0700]

12.1.2.5-1 General

The acoustic design of the control room should ensure that verbal communications among personnel are not impaired; auditory signals are readily detected; and auditory distraction, irritation, and fatigue are minimized.[0700]

12.1.2.5-2 Background Noise

Background noise should not impair verbal communication between any two points in the main operating area.

Additional Information: Verbal communications should be intelligible using normal or slightly raised voice levels. Figure 12.3 shows the voice levels needed for spoken communication over specified distances in the presence of different levels of background noise. Intelligibility of speech in noise is affected by the frequency spectra of the noise and of the speakers' voices and by the speakers' hearing sensitivity.[0700, 5680]

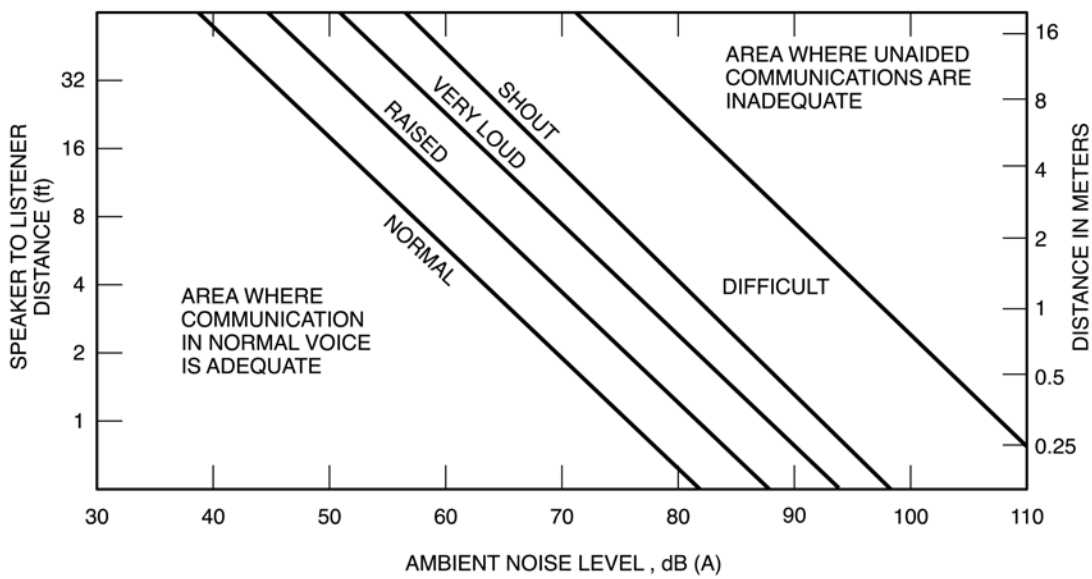

Figure 12.3 Voice level as a function of distance and ambient noise level

12.1.2.5-3 Background Noise Level

Background noise levels should not exceed 65 dB(A).

Additional Information: Operators eight feet apart will have to speak loudly to be heard in the presence of a 65 dB(A) background noise. Therefore, if workstations, display panels, or control interfaces are widely separated in the control room, the background noise limit should be reduced.[0700]

12 WORKPLACE DESIGN
12.1 Control Room
12.1.2 Control Room Environment
12.1.2.5 Auditory Environment

12.1.2.5-4 Further Reductions
Where communications between the main operating area and other control room locations are necessary, and voice transmission systems are not provided, further reductions in background noise should be implemented.[0700]

12.1.2.5-5 Noise Distractions
Noise distractions generated either inside or outside the control room should be minimized.[0700]

12.1.2.5-6 Reverberation Time and Sound Absorption
The acoustical treatment of the control room should limit reverberation time to 1 second or less.[0700, 5908]

12.2.1.1-1 Labeling of Equipment
Labels should appear on all components and systems with which personnel may interact.[6146]

12.2.1.1-2 Replacement of Labels
When labels are affixed, earlier markings (such as labels applied during construction or acceptance, or informal labels) should be removed.[6146]

12.2.1.1-3 Viewing Direction
When equipment may be approached from more than one direction, labels should be placed on surfaces so that they are visible from each direction.[6146]

12.2.1.1-4 Label Visibility
Identifying labels should be placed so that they are readily visible at typical viewing distances and orientations.
Additional Information: Labels should be placed so as to be visible to plant personnel of both short and tall stature. Recommended character sizes are given in Guideline 12.2.1.2-3.[6146]

12.2.1.1-5 Locator Labels
Readily visible markings should be placed nearby to indicate the location and identity of components that are partially blocked from view.
Additional Information: The location of overhead valves can be indicated by labels on floors or walls directly below them.[6146]

12.2.1.1-6 Label Orientation
Labels should be designed and mounted so that text is oriented horizontally for ease of reading.
Additional Information: Requiring operators to manipulate and re-orient the label is inconvenient (especially when their hands are full), and may lead to misreading.[6146]

12.2.1.1-7 Label Positioning
Labels should be attached or positioned so as to unambiguously indicate the item being identified.[6146]

12.2.1.1-8 Redundant Labels
When labels are placed on the doors of equipment cabinets, redundant labels should be placed inside so that they are visible when the door is open.[6146]

12.2.1.1-9 Label Placement Conventions
Specific conventions for label placement should be employed for each type of equipment (e.g., valves, motors).[6146]

12.2.1.1-10 Label Mounting
Tags should be attached to components so as not to cause damage or interfere with operation.
Additional Information: Valve labels should not be connected to handwheels or operating chains. The wire used to attach a label to a valve should be passed through the yoke in a manner that will not damage the stem. For chain-operated valves, the label should be wired to a small piece of plastic pipe through which the operating chain passes freely.[6146]

12.2.1.1-11 Label Replacement after Maintenance

Maintenance procedures should require personnel to check that labels are in place after components are reassembled or replaced.[6146]

12.2.1.1-12 Means of Label Attachment

Labels and tags should be securely attached in a manner appropriate to the equipment and environmental conditions.

Additional Information: The method chosen to attach a label should take into account the possibility of exposure to heat, corrosive substances, oil, or solvents.[6146]

12.2.1.2-1 Label Material

The material from which labels and tags are made should be appropriate to the equipment and environmental conditions.

Additional Information: The material chosen should take into account the possibility of exposure to heat, corrosive substances, oil, or solvents. A single label material may not be appropriate in all environments. If different label material is required at different locations in the plant, an effort should be made to keep the content and format of the labels constant.[6146]

12.2.1.2-2 Label Contrast

Lettering and background colors should provide high contrast and high legibility.

Additional Information: Dark letters on a light background are preferred. Table 11.2 provides examples of color combinations and their relative legibility. Stamped metal tags (brass, stainless steel, and color anodized aluminum) often are illegible under less-than-optimal conditions.[6146]

12.2.1.2-3 Character Height

Characters used on labels should be sized to take into account viewing distances and illumination conditions.

Additional Information: The character height recommendations in Guideline 11.3.1.5-1 should be observed. Character heights required for various viewing distances are given in Table 12.5. Under less-than-optimal viewing conditions, the preferred values should be used as minimums. The preferred values should also be used for critical markings associated with safety-related systems.[6146]

12.2.1.2-4 Stenciled Labels

Stenciled labels should not be used.

Additional Information: The gaps in stenciled characters render them less legible than other forms of labeling.[6146]

12.2.1.2-5 Label Reflectance

Surfaces of labels should have a non-reflective (i.e., matte) finish.

Additional Information: Reflective materials may be added to labels to aid locating equipment when normal lighting is lost. Such labels should be designed so that legibility is not impaired under normal lighting conditions; e.g., a reflective border may be placed around the contents of the label.[6146]

Table 12.5 Minimum and preferred character heights for various viewing distances

Viewing Distance	Minimum Character Height		Preferred Character Height	
	inches[1]	points[2]	inches[3]	points[2]
28 inches	0.112	8	0.168	12
3 feet	0.144	10	0.216	16
4 feet	0.192	14	0.288	21
5 feet	0.240	17	0.360	26
6 feet	0.288	21	0.432	30
10 feet	0.480	35	0.720	50
20 feet	0.960	70	1.440	100
30 feet	1.440	100	2.160	150
40 feet	1.920	140	2.880	200
50 feet	2.400	175	3.600	250

[1] minimum character height (15 minutes of arc) = distance multiplied by .004
[2] character heights in points (1 point = 1/72 inch) are approximate
[3] preferred character height (20 minutes of arc) = distance multiplied by .006

12.2.1.3-1 Label Information

Labels should contain concise, descriptive noun names along with alphanumeric system and component identification codes.

Additional Information: Labels should provide sufficient descriptive information to allow the least experienced operator to recognize the equipment. The following additional items may be considered for inclusion on labels: unit/train/channel designations, power supply information, operational characteristics, and flow direction.[6146]

12.2.1.3-2 Labeling Conventions

Labeling conventions should be employed to ensure consistency of plant labeling with drawings and procedures.[6146]

12.2.1.3-3 Standard Label Format

The format of presentation (e.g., order, position) of information should be consistent on all labels.[6146]

12.2.1.3-4 Abbreviations

Abbreviations used on labels should be standardized and easily recognized.[6146]

12 WORKPLACE DESIGN
12.2 Local Control Stations
12.2.2 Information Display
12.2.2.1 Gauges/Meters

12.2.2.1-1 Design

The design of gauges and meters should conform to the relevant portions of Section 1.6.4, Meters.[6146]

12.2.2.2-1 Design

If CRT displays are employed, they should conform to the relevant portions of Section 1, Information Display.[6146]

12.2.2.3-1 Alignment Marks
Alignment marks should be used to indicate open and closed status of important manual valves.[6146]

12.2.2.3-2 Visibility of Position Indication
The location and size of the alignment marks should reflect the normal viewing distance, location, and ambient lighting.[6146]

12.2.2.3-3 Indication of Full Open/Closed Positions
Alignment marks should show both the valve's fully open and fully closed positions.[6146]

12.2.2.3-4 Design of Position Indication
Alignment marks should be located to minimize parallax error.
Additional Information: Parallax refers to the apparent change in the relative positions of objects depending on the position of the viewer. Error will be minimized if the distance between the indicator and the marks against which it is to be read is small, and if the indicator is located so that it can be viewed "straight-on," i.e., with the observer's LOS perpendicular to the plane of the alignment marks.[6146]

12.2.2.3-5 Indication of Direction of Rotation
The direction of rotation for opening and closing of a valve control wheel should be indicated in cases where the direction is not obvious.[6146]

12.2.2.3-6 Precision of Indication
Alignment marks should be precise enough that the observers can tell when a valve is fully opened or closed.[6146]

12.2.2.3-7 Alternate Means of Local Position Indication
Indicators that are activated by valve limit controls should be used when alignment marks would not be appropriate.[6146]

12.2.3.1-1 Design of Controls
The design and operation of controls should conform to the guidelines in Section 3, Controls.[6146]

12.2.3.1-2 Inadvertent Activation
Controls should be protected against inadvertent actuation.
Additional Information: See Guideline 3.1.1-4. The danger of inadvertent actuation of controls may be greater outside the control room due to ongoing construction, maintenance, calibration, and outage-related activities. Controls can be affected by personnel or equipment moving by, radio transmissions, or vibration.[0700]

12.2.3.1-3 Suitability for Use
The operation of controls should be compatible with the use of protective clothing, if it may be required.
Additional Information: See Guideline 3.1.1-12. The likelihood of operators requiring protection (e.g., against heat or radiation) is greater outside the control room.[0700]

12.2.3.2-1 Operating Labels

Handwheels should be provided with double-ended arrows showing the direction of operations and labeled at each end to indicate the functional result (i.e., open and close).[6146]

12.2.3.2-2 Turning Aids

Knurling, indentation, high-friction covering, or a combination of these should be built into the handwheel to allow the application of the required torque.[6146]

12.2.4.1-1 Range of Coverage of Loudspeakers

Loudspeaker coverage should be such that members of the work force can be alerted under all plant conditions.[6146]

12.2.4.1-2 Coverage Areas of Loudspeakers

Loudspeaker coverage should be provided in all areas where the work force may be.[6146]

12.2.4.1-3 Locations and Amplitudes of Loudspeakers

Speakers should be placed within a space so that their number, location, and volume provide an intelligible signal to all workers therein.
Additional Information: Room size and configuration, and ambient noise levels should be taken into account.[6146]

12.2.4.1-4 Echoes

Loudspeaker systems should not echo.
Additional Information: Sufficient numbers of loudspeakers should be provided in containment and other large volumes to avoid excessive echoing. Maximum speaker range in these reverberant spaces should not exceed 50 feet.[6146]

12.2.4.2-1 Locations of Page Stations

Page stations should be located so that time required for access by personnel does not exceed 30 seconds.[6146]

12.2.4.2-2 Shielding of Page Stations

Sound shielding should be provided where ambient noise levels exceed 90 dB(A).[6146]

12.2.4.2-3 Control of Page System

Design features or administrative controls should limit unauthorized or excessive paging.[6146]

12.2.4.2-4 Variable Amplitude Speakers

A means of varying speaker amplitude should be provided when ambient noise levels may vary by more than 20 dB.

Additional Information: Features should be provided to allow the volume setting to be monitored. Administrative controls should be established to ensure that speaker amplitude is restored after having been reduced, e.g., during an outage.[6146]

12.2.4.3-1 High Noise Environments

Communications equipment should conform to guidelines in Section 10.2.1, General Requirements, relevant to high noise environments (i.e., Guidelines 10.2.1-5, 10.2.1-6, 10.2.1-9).[6146]

12.2.4.3-2 Portable Alerting Devices

Personal page devices should be provided and should be suitable for high-noise or remote areas.[6146]

12.2.4.4-1 Capacity Requirements
A minimum of five communications channels should be provided to avoid excessive waiting for a free channel.[6146]

12.2.4.4-2 Dedicated Emergency Circuits
Dedicated lines should be provided for frequent or emergency communications.
Additional Information: Sound-powered lines are a cost-effective method of providing this capability.[6146]

12.2.4.4-3 Signal Characteristics
The signal transmission characteristics of the system should support good intelligibility.[6146]

12.2.4.4-4 System Access Locations
System stations should be located so that time and effort required for access by personnel is not excessive and so that stations are in areas of relative quiet.[6146]

12.2.4.4-5 Portable Communication Devices
Portable systems should be available to supplement installed systems.
Additional Information: Guidelines for the use of portable radio transceivers (walkie-talkies) are given in Section 10.2.4, Portable Radio Transceivers.[6146]

12.2.4.4-6 Radio Coverage
Surveys should be conducted to identify areas in which radio communication is not possible, e.g., "dead spots" or areas near sensitive equipment.
Additional Information: Other means of communication should be readily available in areas where radio use is prohibited.[6146]

12.2.4.4-7 Radio Repeaters
Radio repeaters should be installed to eliminate "dead spots" if radio communication is relied upon.[6146]

12.2.4.4-8 Use with Special Garments
Communication capability should be provided for personnel wearing protective clothing.
Additional Information: Voice communication with masks is considered in Section 10.2.7, Emergency Communications.[6146]

12.2.4.5-1 Training in Communications Practices

Communications training should be provided as a cost effective method of improving efficiency and reliability of communications.[6146]

12.2.4.5-2 Periodic Surveillance Programs

Administrative programs should provide for periodic system surveillance.[6146]

12.2.4.5-3 Intelligibility Tests

Determinations of speech intelligibility should be conducted for activities involving critical communications.[6146]

12.2.4.5-4 Page System Capacity Upgrading

Multiplexing should be added where needed to expand the number of page-party channels.[6146]

12.2.5.1-1 Heat Stress

The level of physical activity and required protective clothing, as well as temperature and humidity, should be considered when assessing the danger of heat exposure.
Additional Information: Important considerations are the amount of metabolic heat being generated by the worker and the restriction of evaporative heat loss associated with protective clothing. Workers' abilities to withstand heat will also differ based on their physical conditioning and degree of acclimatization.[6146]

12.2.5.1-2 Engineering Controls

Engineering controls should be applied where heat may impair the effectiveness or threaten the well being of workers.
Additional Information: Examples of engineering controls include: shielding or insulating sources of radiant heat, eliminating steam leaks, increasing ventilation, and providing assists to reduce the strenuousness of the task. Temperature ranges intended to minimize performance decrements and potential harm to workers as a result of excessive heat are given in Table 12.6. The temperature ranges in the table are ceiling values; i.e., they assume that protective practices (such as acclimatization, training, and a cool place to rest) are in place.[6146]

12.2.5.1-3 Work Practices

Work practices should be adopted to minimize risk due to heat exposure that cannot be eliminated by engineering controls.
Additional Information: Recommended work practices recommended include training in the recognition and treatment of heat illnesses, water and salt replacement, acclimation, and work/rest cycles (stay times). Illustrations of how temperature (wet-bulb globe temperature, WBGT), metabolism, and clothing relate to stay times are found in Table 12.7. The times in the table are ceiling values; i.e., they assume that protective practices (such as acclimatization, training, and a cool place to rest) are in place.[6146]

12.2.5.1-4 Water Replacement

Water should be readily available in areas where the potential for heat stress exists.
Additional Information: Unusual measures may be necessary to provide drink to workers in restricted areas.[6146]

Table 12.6 Ranges of WBGT for different ranges of stay times

Stay Time	Work Clothes			Cotton Coveralls			Double Cottons			Cottons plus Plastics		
	Metabolism			Metabolism			Metabolism			Metabolism		
	Low	Mod	High	Low	Mod	High	Low	Mod	High	Low	Mod	High
0-15	50-52 (122-126)	42-50 (108-122)	38-42 (100-108)	48-50 (118-122)	41-49 (106-120)	37-41 (99-106)	46-48 (115-118)	38-46 (100-115)	34-38 (93-100)	44-46 (111-115)	36-44 (97-111)	32-36 (90-97)
15-30	44-50 (111-122)	36-42 (97-108)	32-38 (90-100)	42-48 (108-118)	35-41 (95-106)	31-37 (89-99)	40-46 (104-115)	32-38 (90-100)	28-34 (82-93)	38-44 (100-111)	30-36 (86-97)	26-32 (79-90)
20-45	42-48 (108-118)	34-38 (93-100)	31-34 (89-93)	40-46 (104-115)	33-37 (91-99)	30-33 (86-91)	38-44 (100-111)	30-34 (86-93)	27-30 (81-86)	36-42 (97-108)	28-32 (82-90)	25-28 (77-82)
30-60	40-44 (104-111)	33-36 (91-97)	30-32 (86-90)	38-42 (100-108)	32-35 (90-95)	29-31 (84-89)	36-40 (97-104)	29-32 (84-90)	26-28 (79-82)	34-38 (93-100)	27-30 (81-86)	24-26 (75-79)
45-90	38-42 (100-108)	32-34 (90-93)	29-31 (84-89)	36-40 (97-104)	31-33 (89-91)	28-30 (82-86)	34-38 (93-100)	28-30 (82-86)	25-27 (77-81)	32-36 (90-97)	26-28 (79-82)	23-25 (73-77)
60-120	36-40 (97-104)	30-33 (86-91)	28-30 (82-86)	34-38 (93-100)	29-32 (84-90)	27-29 (81-84)	32-36 (90-97)	26-29 (79-84)	24-26 (75-79)	30-34 (86-93)	24-27 (75-81)	22-24 (72-75)
90-3h	34-38 (93-100)	29-32 (84-90)	27-31 (81-89)	32-36 (90-97)	28-31 (82-89)	26-30 (79-86)	30--34 (86-93)	25-28 (77-82)	23-27 (73-81)	28-32 (82-90)	23-26 (73-79)	21-25 (70-77)
2h-4h	32-36 (90-97)	28-30 (82-86)	26-28 (79-82)	30-34 (86-93)	27-29 (81-84)	25-27 (77-81)	28-32 (82-90)	24-26 (75-79)	22-24 (72-75)	26-30 (79-86)	22-24 (72-75)	20-22 (68-72)

Table 12.7 Stay times for different WBGTs

Wet-Bulb Globe Temp		Work Clothes			Cotton Coveralls			Double Cottons			Cottons plus Plastics		
		Metabolism			Metabolism			Metabolism			Metabolism		
C	F	Low	Mod	High	Low	Mod	High	Low	Mod	High	Low	Mod	High
50	122	15-30	0-10		5-15	0-5		5-15					
48	118	20-45	5-15		15-30	5-10		10-20			5-15		
46	115	20-45	5-20		20-45	5-15		15-30	0-10		15-20		
44	111	30-60	10-25		20-45	5-20		20-45	5-15		15-30	0-10	
42	108	45-90	15-30	5-10	30-60	10-25		20-45	5-20		20-45	5-15	
40	104	60-90	15-45	10-20	45-90	15-40	5-10	30-60	10-25		20-45	5-20	
38	100	90-120	20-45	15-30	60-90	15-45	10-25	45-90	15-30	5-10	30-60	10-25	
36	97	2h-4h	30-60	15-40	90-120	25-45	15-30	60-90	15-45	10-20	45-90	15-30	5-10
34	93	3h-8h	45-90	20-45	2h-4h	30-60	15-45	90-120	20-45	15-30	60-90	15-45	10-20
32	90	NL	90-120	30-60	3h-8h	60-100	25-50	2h-4h	30-60	15-40	90-120	20-45	15-30
30	86	NL	2h-4h	60-120	NL	1h-2h	30-90	3h-8h	45-90	20-45	2h-4h	30-60	15-40
28	82	NL	NL	2h-4h	NL	1h-4h	lh-3h	NL	90-120	30-60	3h-8h	45-90	20-45
26	79	NL	NL	4h-8h	NL	NL	3h-8h	NL	2h-4h	60-120	NL	90-120	30-60
24	75	NL	NL	NL	NL	NL	NL	NL	NL	2h-4h	NL	2h-4h	60-120
22	72	NL	NL	NL	NL	NL	NL	NL	NL	4h-8h	NL	NL	2h-4h
20	68	NL	NL	NL	NL	NL	NL	NL	NL	NL	NL	NL	4h-8h
<20	<68	NL	NL	NL	NL	NL	NL	NL	NL	NL	NL	NL	NL

12.2.5.2-1 Outdoor Equipment

Equipment located outdoors should be sheltered from the elements as much as possible.[6146]

12.2.5.2-2 Wind Chill

When considering the effects of cold on performance, the effect of air velocity should be taken into account.

Additional Information: Table 12.8 illustrates the wind chill effect; effective temperatures are shown for different combinations of air temperature and wind speed.[5680]

Table 12.8 Wind chill

Wind Speed	Actual Air Temperature (°F)									
(mph)	50	40	30	20	10	0	-10	-20	-30	-40
Calm	50	40	30	20	10	0	-10	-20	-30	-40
5	48	36	27	17	-5	-5	-15	-25	-35	-46
10	40	29	18	5	-8	-20	-30	43	-55	-68
15	35	23	10	-5	-18	-29	-42	-55	-70	-83
20	32	18	4	-10	-23	-34	-50	-64	-79	-94
25	30	15	-1	-15	-28	-38	-55	-72	-88	-105
30	28	13	-5	-18	-33	-44	-60	-76	-92	-109
35	27	11	-6	-20	-35	-48	-65	-80	-96	-113
40	26	10	-7	-21	-37	-52	-68	-83	-100	-117
45	25	9	-8	-22	-39	-54	-70	-86	-103	-120
50	25	8	-9	-23	-40	-55	-72	-88	-105	-123

12.2.5.2-3 Effects of Cold on Performance

The potential for exposure to cold to affect task performance should be evaluated.

Additional Information: Table 12.9 shows, for various tasks, the no-effect levels for the various impacts of cold on performance (i.e., temperatures below which performance decrements may occur).[5680]

Table 12.9 Temperatures above which no cold effects occur

	Air Temperature	Hand Skin Temperature
General Discomfort	69 °F	75 °F
Effects of Cold on the Hands		
Skin Sensitivity		75 °F
Numbness	54 °F	68 °F
Pain		61 °F
Finger Discrimination		37 °F
Grip Strength	14 °F	
Task Performance		
Fine Manual Tasks	64 °F	55 °F
Tracking	55 °F	
Gross Manual Tasks	54 °F	59 °F

12.2.5.2-4 Engineering Controls
Engineering controls should be applied where cold may impair the effectiveness or threaten the well being of workers.
Additional Information: Engineering controls increase the amount of heat received by the worker or insulate the worker from the cold; examples include providing space heaters or wind breaks, and insulating tool handles or valve handwheels. In addition, equipment handles and latches and panel switches and pushbuttons should be operable with gloved hands if located in areas where workers may be exposed to cold.[5680]

12.2.5.2-5 Work Practices
Work practices should be adopted to minimize risk due to cold exposure that cannot be eliminated by engineering controls.
Additional Information: Examples of administrative controls include scheduling outdoor maintenance for warmer seasons or times of day, assigning more worker to a job to reduce the duration of the exposure to cold, and allowing workers to take a break in warm areas when needed.[5680]

12.2.5.2-6 Protective Clothing
Insulated clothing, hats and gloves should be provided to workers who are exposed to cold.
Additional Information: The need to remove gloves to perform certain tasks should be taken into account, and engineering and administrative controls should be applied accordingly.[5680]

12.2.5.3-1 Quieting the Work Process

Steps should be taken to reduce noise at its source.
Additional Information: The preferred approach for mitigating the effects of noise is to reduce the vibration that is causing the noise by isolating or dampening the vibration with machine mountings. The speed of the operating machinery can be altered, thereby changing the frequency of the noise. The resonance of the vibrating objects can be reduced.[5680]

12.2.5.3-2 Limiting Noise Transmission

Steps should be taken to limit the transmission of noise.
Additional Information: Noise can be reduced by increasing the distance of the noise source from the worker. This technique is less effective for low frequencies. Sound-attenuating barriers or enclosures should be used when workers are required to work near equipment that, despite quieting measures, produces high levels of noise. Sound-absorbing materials can absorb 70% of the noise that strikes them. These materials are effective for both low and high frequencies.[5680]

12.2.5.3-3 Limiting Noise Exposure

Steps should be taken to protect workers from noise.
Additional Information: Administrative controls should limit the amount of time that workers spend in noisy locations.[5680]

12.2.5.3-4 Hearing Protection

Ear protection devices should be available and required to be worn in areas where noise levels are 85 dB or more.[6146]

12.2.5.3-5 Sound Attenuating Enclosures

When workers may be required to remain in high noise areas for extended periods of time, appropriate sound attenuating enclosures should be provided.[6146]

12.2.5.3-6 Auditory Capabilities of Users

The hearing sensitivity of the work force should be monitored.
Additional Information: The needs of those workers with hearing degradation should be taken into account.[6146]

12.2.5.3-7 Communications and Hearing Protection

Communication equipment in high noise areas should be compatible with ear protection devices.[6146]

12.2.5.4-1 Illumination Levels

The illumination levels should conform to those listed in Table 12.10.

Additional Information: The values in the table are based on conservative assumptions about the reflectance of the task background, the age of the worker, and the criticality of the task being performed. Lower illuminances may be justified for more favorable visual conditions or where the need to perform critical tasks can be ruled out. For tasks similar to those performed in the control room (e.g., reading instruments, calibration, reading procedures), the lighting recommendations in Section 12.1.2.3, Illumination, should be consulted.[0700, 5680]

Table 12.10 Range of recommended illuminances for inspection/assembly activities

Area/activity	Footcandles
Inspection/assembly	
Simple	50
Difficult	200
Rough Bench or Machine Work	50
In-plant areas	
Turbine Building	50
Auxiliary Building	20
Laboratory	100
Storage Room	20
ESF Equipment	50
Diesel Generator Building	50
Fuel Handling Building	50
Reactor Building	50
Stairways and Corridors	10

12.2.5.4-2 Portable Lighting

Easily used, portable lighting devices should be readily available nearby when permanent lighting (normal or emergency) may be inadequate.

Additional Information: A supply of fresh batteries should be stored near portable lighting devices. [6146]

12.2.5.5-1 Permanent Means of Access
Permanent means of access to equipment requiring recurrent or emergency operation should be provided when it is beyond the normal standing reach of workers.
Additional Information: Examples of access provisions include work platforms and ladders.[6146]

12.2.5.5-2 Temporary Means of Access
Temporary or movable access platforms to equipment should be available when the equipment is located beyond the normal standing reach of workers and permanent access provision is not feasible.[6146]

12.2.5.5-3 Appropriate Means of Access
Catwalks, ladders, and other suitable means should be provided for workers to reach equipment.
Additional Information: Workers should not be required to walk along pipes or to use components as "stepping stones" in order to reach equipment.[6146]

12.2.5.5-4 Sufficient Clearance
Sufficient clearance should be provided in the vicinity of equipment in contaminated or high temperature areas to allow workers easy access despite the use of protective garments and associated gear.[6146]

12.2.5.5-5 Impediments to Access
Access to equipment to be operated should not be impeded by structural elements.
Additional Information: Structural elements added to the plant (e.g., seismic reinforcements) should not restrict access to equipment.[6146]

12.2.5.6-1 Vibration Levels

The effects of vibration on visual and manual performance should be evaluated using Figure 12.4.
Additional Information: Engineering controls should be applied to reduce vibration; see Guidelines 12.2.5.6-2 and 12.2.5.6-3. If vibration levels still exceed those in the unshaded areas of Figure 12.4, a study should be performed to demonstrate that human performance is within acceptable limits. In the top graph, the shaded area represents conditions that will cause an error of 5% or more in number reading. In the bottom graph, the shaded area represents conditions that will cause a tracking error of 10% or more.[5680]

12.2.5.6-2 Reducing Vibration

Steps should be taken to reduce vibration at its source.
Additional Information: The preferred approach for reducing the vibration is to isolate or dampen the vibration with machine mountings.[5680]

12.2.5.6-3 Limiting Transmission of Vibration

Steps should be taken to limit the transmission of vibrations to workers.
Additional Information: Workers can be isolated from vibration in shock-mounted, energy-absorbing platforms.[5680]

12.2.5.6-4 Reducing the Effects of Vibration

User interfaces should be designed to reduce the disruptive effects of vibration.
Additional Information: Modifications that minimize the effects of vibration on task performance include installing larger dials that can be read despite vibration or providing a means for workers to stabilize their limbs.[5680]

12.2.5.6-5 Limiting Exposure to Vibration

Steps should be taken to protect workers from excessive vibration.
Additional Information: Administrative controls should limit the amount of time that workers are exposed to high levels of vibration. These controls would primarily address effects on comfort and worker safety.[5680]

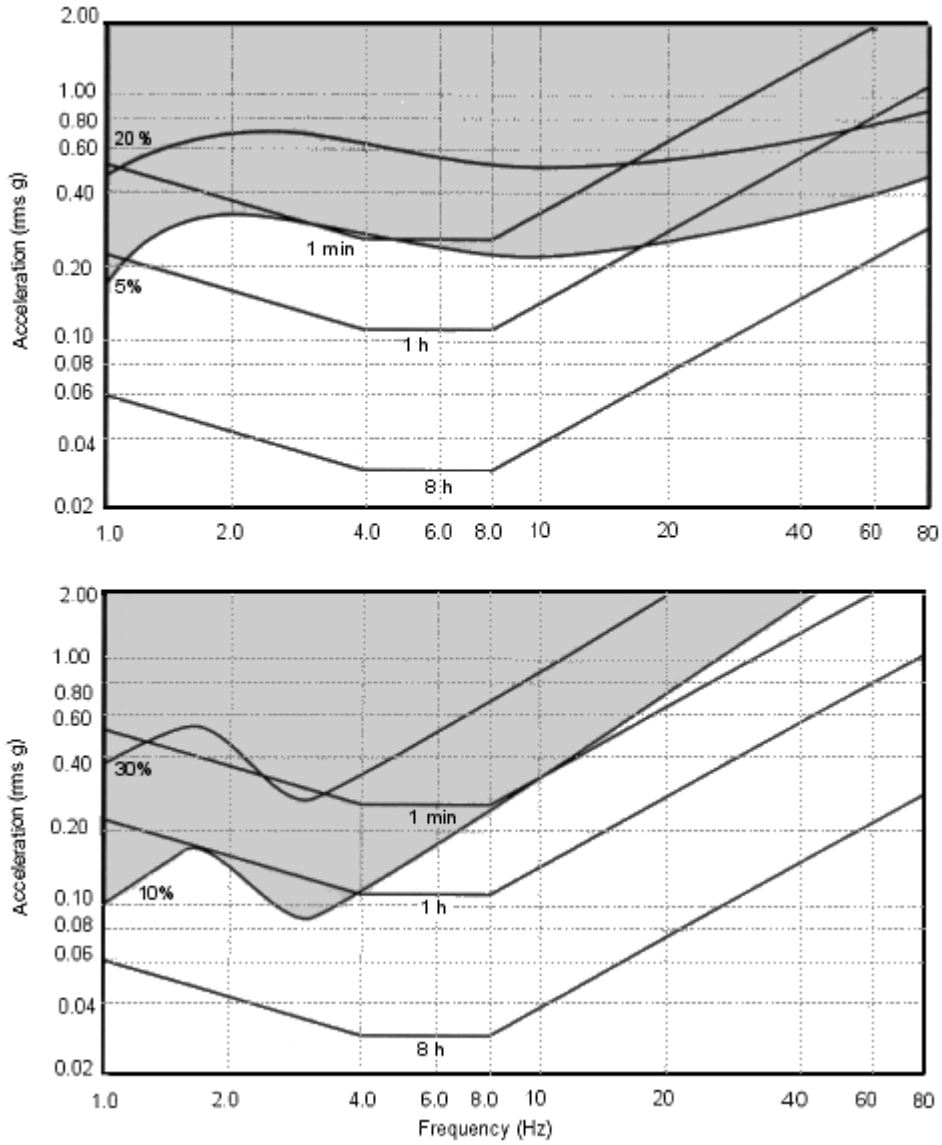

Figure 12.4 Acceleration/frequency combinations and the accuracy of number reading and manual tracking

Part IV
HSI Support

SECTION 13: MAINTAINABILITY OF DIGITAL SYSTEMS

13 MAINTAINABILITY OF DIGITAL SYSTEMS

The installation of digital equipment in NPP systems may range from replacing individual subsystems and components, to completely replacing entire systems, e.g., a system based entirely on digital technology may supercede an analog monitoring system. Rather than replacing the entire system, a control system consisting of sensors, processors, controls, displays, and equipment actuators, may have its analog processors upgraded with digital processors. When installing a digital processor, it may be necessary to install additional signal converters to translate the analog signals into digital format for the new processor, and then translate the digital output of the processor back into analog format for the rest of the system. Thus, much of the plant system may retain its original analog design, resulting in a hybrid of digital and analog components.

Digital systems may be described in terms of progressively smaller units, i.e., a unit of equipment may be defined an assemblage of items that includes modules, components, and parts that are packaged together into a single hardware package. A module is defined as an assemblage of two or more interconnected parts or components that comprise a single physical entity with a specific function. A module may be a printed circuit board or a smaller unit containing individual components that plugs into a printed circuit board. A component is defined as a subdivision of a unit of equipment that the maintainer can treat as an object, but which can be further separated into parts. A mounting board, together with its mounted parts, is an example of a component. A part is an object that cannot normally be broken down further without destroying its designated use; fuses, transistors, resistors, capacitors, and integrated circuit "chips" are examples of parts.

When maintaining a digital system, maintenance personnel inspect, test, and service these units of equipment, modules, components, and parts. Important characteristics for maintenance personnel include instrument cabinets and racks, equipment packaging, fuses and circuit breakers, labeling and marking, adjustment controls, test points, and service points. They are described below along with the test equipment used during maintenance.

INSTRUMENT CABINETS AND RACKS

Instrument cabinets and racks are enclosures that hold modules, components, and parts. They typically have access doors or removable panels that allow access to their contents. The layout of these enclosures affects visual and physical access. Visibility is also affected by the presence of lighting as either permanent or temporary (e.g., handheld) fixtures. Other considerations include the amount of electrical wiring and protective features at the enclosure. Review guidelines are provided in Section 13.2.

EQUIPMENT PACKAGING

This refers to the way that modules, components, and parts are arranged within the enclosure. Review guidelines are provided in Section 13.3. Three packaging considerations are modularization, layout, and mounting:

Modularization

This is a design strategy for enhancing maintainability by dividing a unit of equipment into individual modules. Four methods for organizing modules are logical flow packaging, circuit packaging, component packaging, and printed circuit boards. In logical flow packaging, circuits, parts, and components are arranged in correspondence with their functional relationships. In circuit packaging, all parts of a single circuit or logically related group of parts, and only that circuit or group, are placed in a separate module. In component packaging, similar parts or components are located together; for example, all the fuses or all the relays might be grouped together. With printed circuit boards, parts are mounted on a single integrated circuit board. Review guidelines are provided in Section 13.3.2.

Layout

This refers to the arrangement of modules relative to each other. Important considerations include their accessibility (e.g., consistency of orientation, spacing, and avoidance of stacking) and their grouping (e.g., by maintenance task). Review guidelines are provided in Section 13.3.3.

Mounting

This refers to the ways in which modules, components, and parts are attached. Considerations include the use of hinged mountings, rests, stands, and connectors, and their effects on mounting errors, equipment damage, and accessibility. Review guidelines are provided in Section 13.3.4.

FUSES AND CIRCUIT BREAKERS

These devices protect equipment from changes in electrical current. Considerations include their locations within equipment, indications of open circuits, protection of workers and circuits, and indication of rating. Review guidelines are provided in Section 13.4.

LABELING AND MARKING

This refers to the use of labels and demarcations to identify units of equipment, modules, components, and parts. Considerations include their placement, legibility, and durability. Review guidelines are provided in Section 13.5.

ADJUSTMENT CONTROLS

Personnel use adjustment controls to affect the operation of equipment, such as by setting the value at which the equipment will operate. These controls may be external (e.g., mounted on maintenance panels) or internal (e.g., test and relay switches located on printed circuit boards). Review guidelines are provided in Section 13.6.

TEST POINTS

Test points are locations on equipment where test equipment can be connected. Some are specially designed to receive test equipment, such as ports for voltmeters and multi-pin connectors for automatic test equipment. Others include electrical connectors and terminals where test probes may be used to measure voltages or current. Considerations include location, arrangement, marking, and accessibility. Review guidelines are provided in Section 13.7.

SERVICE POINTS

Service points are locations on equipment where personnel perform routine maintenance tasks such as cleaning and changing components. For example, a digital system may contain a ventilation fan with an air filter that must be periodically replaced. Considerations include location, arrangement, marking, and accessibility of service points. Review guidelines are provided in Section 13.7, with the guidelines on test points.

TEST EQUIPMENT

Test equipment includes the diagnostic tools maintenance personnel use to assess the status of equipment and locate any faults. This equipment is used in periodic surveillance tests, periodic maintenance, and unscheduled maintenance due to failures. Review guidelines on the general characteristics of test equipment are provided in Section 13.8.1. Specific topics for test equipment are described below.

Automatic Test Equipment

Automatic test equipment (ATE) can check two or more signals in sequence without the intervention of a maintainer. They are usually programmable devices designed to exercise a set of functions of a particular portion of a digital system to detect faults. ATE is intended to relieve some of the burdens associated with manually testing digital systems. The tests may be focused at a high level, such as the operation of a subsystem, or at a low level such as the operation of an individual component. Thousands of tests may be rapidly administered with minimal human intervention. For example, many integrated circuits, such as microprocessors, may require several hundred unique test patterns to verify that they are operating properly. ATE tests usually stop after the first out-of-tolerance signal is detected. General review guidelines are provided in Section 13.8.2.1.

Important specific considerations include

Testing intervals

This refers to the way that the automatic test sequences are initiated (e.g., continuous, automatically, or manually). Review guidelines are provided in Section 13.8.2.2.

Bypasses for plant and test equipment

Automatic capabilities must sometimes be disabled (bypassed) to allow tests to be performed and then reinstated. Review guidelines are provided in Section 13.8.2.3.

Failure indications

These are indications used to determine the presence of a possible equipment failure, and include the status of equipment redundancy, tolerance ranges, power, and circuit integrity. Review guidelines are provided in Section 13.8.2.4.

Display of test results

This refers to the way that test outcomes are presented. The go / no-go format provides results as one of two possible outcomes, the former indicating an acceptable condition and the latter indicating an unacceptable condition. This format may be used to indicate whether a given signal is in or out of tolerance. Collating test format presents the results of two or more checks as a single display. For example, a "test passed" indication would occur only if all of the relevant signals are in tolerance. Thus, it reduces the number of indications a maintainer must read, thereby reducing testing time. Other considerations for displaying test results include using high- and low-value fault messages, ease of interpretation, identification of fault location, and identification of out-of-tolerance signals for collating test equipment. Review guidelines are provided in Section 13.8.2.5.

Test equipment may exist as integral parts of plant equipment, such as built-in test capabilities, or as separate pieces of portable equipment. Portable test equipment may be as small as a handheld voltmeter or as large as an engineering workstation. For example, some portable ATE systems are essentially personal computers on wheels. It may be connected internally or externally to the plant equipment. For example, some test equipment has probes that are manually positioned on internal components of equipment to conduct tests. Other portable test equipment is connected to built-in test panels or ports located on the outside of the plant equipment. A built-in test panel may have multiple test ports, which may be annotated with block diagrams or overlays to identify the ports and their relationships to the equipment's components. General review guidelines are provided in Section 13.8.3.1, and guidelines specific to portable test equipment and built-in test panels are provided in Sections 13.8.3.2 and 13.8.3.3, respectively.

13 MAINTAINABILITY OF DIGITAL SYSTEMS

13.1 General

13.1.1 Minimizing Maintenance Demands

13.1.1-1 Minimizing Testing and Servicing

Requirements for periodic or repetitive testing and servicing of components should be avoided where the possibility of human errors may affect safety.

Additional Information: One way to reduce the need for testing and servicing is to use highly reliable components.[6636]

13.1.1-2 Equipment Independence for Maintenance

Units of equipment should be as independent as is practical, such that maintenance of one unit has minimal effects on the other equipment.

Additional Information: Functional, mechanical, electrical, and electronic independence can allow one unit to be maintained with minimal effects on other units. Units of equipment should correspond to the functional design of the equipment. The functional independence of each unit should be maximized while minimizing the interaction between them.[6636]

13.1.1-3 Minimize Maintenance Time

Equipment should be designed to minimize the time required for maintenance if having the equipment out of service can affect safety.

Additional Information: Minimizing the time required for maintenance can increase the equipment's availability. One factor that can increase maintenance time is high cognitive demands associated with such activities as finding components and test or service points, tracing flows between components, and detecting and interpreting symptoms. A second factor is high physical demands, such as dexterity for disassembling and reassembling equipment, accessing internal components, and using connectors, test points, and service points. Maintenance time may also be lengthened by factors that increase the likelihood of errors, such as inadequate feedback from plant or test equipment. In addition, factors that introduce delays or special logistic requirements, such as the need for special tools and test equipment may prolong maintenance.[6636]

13.1.1-4 Ease of Fault Detection

The design of equipment should facilitate rapid, positive fault detection and isolation of defective items.[6636]

13.1.1-5 Equipment Verification

When feasible, equipment should permit verification of operational status before its installation and without the need for disassembly.

Additional Information: For example, maintenance personnel should be able to verify that a module is in operating condition through inspections or tests, such as by attaching the equipment to a test device. These inspections and tests should not require the maintainer to disassemble the module.[6636]

13.1.1-6 Fault Detection Without Disassembly

Equipment should permit fault detection and isolation without removing components, through the use of BIT, integrated diagnostics, or standard test equipment.

Additional Information: Fault detection and isolation should unambiguously identify which component has failed.[6636]

13.1.1-7 Design for Repair by Module Replacement

To reduce the likelihood of personnel errors in normal repairs conducted in difficult field environments, the design should support simple modular replacement in the field, and their repair in the shop.

13 MAINTAINABILITY OF DIGITAL SYSTEMS
13.1 General
13.1.1 Minimizing Maintenance Demands

Additional Information: Repair activities, such as rewiring and replacing individual small components, may be more prone to errors when carried out in the field. Restricting field maintenance to replacing modules may reduce the likelihood of these errors.[6636]

13.1.1-8 Overall Accessibility
Equipment that is to be maintained should be visually and physically accessible to the maintainer.
Additional Information: Modules, components, parts, adjustment points, test points, cables, and connectors for all required maintenance tasks should be visually and physically accessible. Labels should be easily seen.[6636]

13.1.1-9 Standardized Designs for Construction
Equipment used in assembling equipment, such as connectors, should be standardized as much as possible.
Additional Information: Standardization reduces the need for maintainers to learn different skills for different designs, and may reduce the likelihood of errors from using the wrong technique when disassembling and reassembling equipment.[6636]

13.1.1-10 Design Flexibility
Equipment design should provide flexibility to allow future design modifications to be made without imposing high demands on personnel for installation and maintenance.
Additional Information: Equipment should be designed to accommodate future modifications or replacement of equipment. Design flexibility includes functional and physical modularity to accommodate replacements and upgrades, and spare physical capacity, such as in cabinets, panels, terminal strips, and wire ways, to provide room for larger or more components. Extra electrical and processing capacity may also support the maintainability of future modifications.[6636]

13.1.1-11 Minimize Maintenance Equipment and Tools
Units of equipment should be designed to minimize the numbers and types of auxiliary equipment and tools required to service them.
Additional Information: Tool requirements should be coordinated across the modules to minimize the number of different tools needed. For example, designers may design modules for the same type of screwdriver rather than requiring a slightly different one for each. The development of tool requirements requires an understanding of the maintenance tasks and the equipment's characteristics. The goal of minimizing the number and types of tools should be addressed early in the equipment design process, and then throughout design and development.[6636]

13.1.1-12 Use Common Test Equipment and Tools
Whenever possible, systems and units of equipment should be designed so they can be maintained with common test equipment and tools.
Additional Information: The need for specialty test equipment and tools should be avoided. Ideally, the tools required should be limited to those normally found in a maintainer's tool kit. Modules should be designed so that they are replaceable by hand or with common tools.[6636]

13.1.1-13 Need for Special Skills
Equipment should be designed to minimize the need for special skills on the part of the maintainers.[6636]

13.1.1-14 Need for Special Training
Equipment should be designed to minimize the need to specially train the maintainers.[6636]

13 MAINTAINABILITY OF DIGITAL SYSTEMS

13.1 General

13.1.2 Continuous Operation and On-Line Maintenance

13.1.2-1 Local Indication of Redundant Equipment Status

If equipment can automatically transfer operation between redundant units, local personnel who maintain that equipment should be informed of the transfer and the status of the redundant units.

Additional Information: Some digital systems automatically transfer control between redundant processors when there is a failure. These redundant processors support on-line maintenance by allowing one processor to control the system while the others are being serviced. When maintenance is performed, local maintenance personnel should be alerted when an automatic transfer occurs, and should be able to readily determine the status of the redundant processors and identify the one controlling the system. Local indications are preferable to control room indications so local personnel need not rely on workers for status information.[6636]

13.1.2-2 Degraded Operation

Status and fault information should be provided to maintenance personnel and operators for equipment awaiting maintenance while operating in a degraded mode.

Additional Information: Because of their importance in a system, some units of equipment may be designed to operate in a degraded mode after a partial failure while awaiting maintenance. Degraded operation and faults should be sensed and appropriate information identified, displayed, or transmitted to maintenance personnel and operators.[6636]

13 MAINTAINABILITY OF DIGITAL SYSTEMS
13.1 General
13.1.3 Supporting the Operator Role in Maintenance

13.1.3-1 Monitoring and Trending Equipment Degradation
To support personnel awareness of impending equipment failures, monitoring and trending capabilities should be provided where possible to identify the degradation of equipment.[6636]

13.1.3-2 Operator Assistance in Testing and Repair
Where practical, equipment should be designed to facilitate testing and repairs without requiring the assistance of the on-shift operator.
Additional Information: Maintenance activities should be designed so that they do not interrupt the operator at staffed control stations.[6636]

13.1.3-3 Operator Indication of Testing or Repair Activities
The operators should be provided with an indication that testing or repairs are underway.
Additional Information: Some testing and repairs may affect equipment or system operability or make it more susceptible to unusual events, such as spurious trips.[6636]

13.1.3-4 Indications for Equipment that is Out of Service
Means for indicating the status of equipment that is out of service should be provided.
Additional Information: Administrative controls for managing these indications (i.e., for tagging-in and tagging-out equipment) also should be in effect.[6636]

13.1.4-1 Designing for Safety of Maintainers

Equipment should not present hazards to maintainers as they follow maintenance procedures.
Additional Information: A positive means (for example, disconnects or lockouts) should be designed into equipment to control hazardous conditions and increase safety. A hazardous condition is the presence of energy or a substance which is likely to cause death or injury by physical force, shock, radiation, explosion, flames, poison, corrosion, oxidation, irritation or other debilitating features.[6636]

13.1.4-2 Covering Exposed Parts

Protrusions and corners on equipment that maintainers might come into contact with should be covered with rubber or other appropriate materials.
Additional Information: Protrusions and corners on equipment may injure the maintainers or cause them to make sudden motions that could damage plant equipment.[6636]

13.1.4-3 Energy Dissipation Before Maintenance

Parts that retain hazardous levels of electrical potential or heat should be equipped with means to dissipate energy before to maintenance.
Additional Information: Heat sinks and electrical grounds can be used to dissipate energy before maintenance. Removing these hazards can reduce the risk of personnel injury. It may also reduce the risk of damage to plant equipment that could result from sudden personnel movements after touching hot or electrically charged surfaces.[6636]

13.1.4-4 Protecting Maintainers from Heat and Electrical Shock

Equipment or parts that retain hazardous levels of heat or electrical potential during maintenance should be located where maintainers will not touch them during their work, or they should be shielded.
Additional Information: For example, high-current switching devices should be shielded to prevent maintainers from coming into contact with them. Internal controls, such as switches and adjustment controls, should be located away from hazardous high-voltage sources with which the maintainers may make contact while operating the controls. Shocks and burns received from equipment may injure maintenance workers or cause them to make sudden motions resulting in damage to equipment. This concern is particularly important for parts that retain energy after external energy sources have been removed or turned off.[6636]

13.1.4-5 Avoidance of Hazards for Adjustment Controls, Test Points, and Service Points

Adjustment controls and test and service points should be located away from hazards.
Additional Information: Adjustment controls and test and service points should not be located close to dangerous voltages, moving machinery, or other hazards, since contact with these hazards may injure maintenance workers or cause them to damage plant equipment by their sudden motion. They should be separated by more than a hand's width, 4.5 in (114 mm), from the nearest hazard. If a hazardous location cannot be avoided, the control, test point, or service point should be appropriately labeled, shielded, and guarded.[6636]

13 MAINTAINABILITY OF DIGITAL SYSTEMS
13.1 General
13.1.5 Protecting Equipment and Components from Hazards

13.1.5-1 Protecting Equipment from Hazards
Equipment should be protected from potential exterior hazards resulting from personnel actions.
Additional Information: Protection may be provided by the design and location of equipment, or by protective barriers or enclosures. Hazards resulting from personnel actions include physical forces, contact with contaminants (such as oil), other fluids, dirt, and contact with static electricity.[6636]

13.1.5-2 Avoiding Damage to Protruding Parts
Irregular protrusions on a unit of equipment should be easily removed to prevent damage by personnel during installation and maintenance.
Additional Information: An electrical cable is an example of an irregular protrusion.[6636]

13.1.5-3 Avoiding Damage When Opening and Closing Equipment
The parts and wiring of a module should be located and arranged so that personnel do not damage them when the module or the unit of equipment of which they are part is opened and closed.[6636]

13.1.5-4 Avoiding Damage When Maintaining Internal Components
Parts that are susceptible to damage by personnel should be located or shielded so that they will not be damaged during maintenance.[6636]

13.2-1 Instrument Racks

Instrument racks should support maintenance and testing by providing adequate physical and visual access to their contents.
Additional Information: Instrument racks provide a location for mounting instruments and wiring.[6636]

13.2-2 Cabinet Lighting

Cabinets requiring maintenance inside the enclosure should have permanent lighting.
Additional Information: Permanently installed lighting should be an aid to personnel in diagnostics, repairs, and troubleshooting. Using hand-held lights may pose hazards for personnel or cause damage to equipment.[6636]

13.2-3 Minimizing Field-Run Wiring

The amount of field-run wiring should be minimized to avoid errors in identifying and connecting wires.
Additional Information: The amount of wiring carried out in the field may be reduced by using multi-connector connections and pre-assembled wiring harnesses. Connectors may have features preventing problems such as improper indexing, electrical shorts, and inadvertent contacts.[6636]

13.2-4 Protective Electrical Grounds for Cabinets

A protective ground should be provided.
Additional Information: All cabinets where the operating voltage is greater than 50 volts should have a protective ground. Protective power grounds should be routed separately from signal grounds. Inadequate electrical grounding may cause electrical shocks to plant personnel resulting in injury or sudden motion that may damage plant equipment.[6636]

13 MAINTAINABILITY OF DIGITAL SYSTEMS
13.3 Equipment Packaging
13.3.1 General

13.3.1-1 Organized by Maintenance Specialty

Parts and modules should be packaged, laid out, and mounted so that maintenance performed by one maintenance specialist does not require removing or handling of equipment or components maintained by another specialist.

Additional Information: Reducing the number of maintenance specialties involved with each part or module can simplify the process, reduce the likelihood of errors and delays due to communication difficulties between specialists, and reduce the time that equipment is out of service.[6636]

13.3.2.1-1 Modularization

Units of equipment should be divided into as many modules as are practical and feasible to support personnel performance during maintenance.

Additional Information: Dividing a unit of equipment into a number of separate modules has several advantages, including making it easier to (1) locate and isolate malfunctions, (2) reach, remove, and maintain components, (3) handle the equipment for installation and repair, and (4) allocate maintenance functions and responsibilities between personnel with different skills.[6636]

13.3.2.1-2 Physical and Functional Interchangeability

If modules are physically interchangeable, they should also be functionally interchangeable to avoid errors in installing the wrong module.

Additional Information: Functionally interchangeable units of equipment perform the same function. Physically interchangeable units of equipment can fit into the same mounting position or fixture. If two units of equipment are interchangeable functionally, they should also be interchangeable physically. However, if they are not interchangeable functionally, they should not be interchangeable physically. Units of equipment having the same form and function should be interchangeable throughout a system and related systems.[6636]

13.3.2.1-3 Distinguishing Noninterchangeable Modules

The appearance of noninterchangeable modules should be distinguishable, and the difference should be apparent when the module is in its installed position.

Additional Information: Interchangeable units of equipment should be clearly identifiable and easily distinguishable from units that are similar, but not interchangeable. Identification methods might be physical (such as size, shape, and mounting provisions) or visual (such as color coding and labeling).[6636]

13.3.2.1-4 Replacement of Failed Components

Equipment should be designed so that components that fail frequently can be easily replaced.

Additional Information: Lamps and fuses are examples of parts that fail more frequently. If a module has parts that are significantly less reliable than the remaining ones, the unreliable parts should be accessible without removing the module.[6636]

13.3.2.1-5 Maintenance in Installed Location

When possible, modules should be designed so that they can be maintained in their installed position, without requiring disconnection, disassembly, or removal of other modules.[6636]

13.3.2.1-6 Removal and Testing

Modules should be designed to permit testing when they are removed from their installed position.

Additional Information: Personnel should not be required to re-install a module into the system to determine whether it has failed, because errors may occur during installation. Other system characteristics also may mask faults in the module. These problems may be avoided by testing the module directly.[6636]

13.3.2.1-7 Installation and Testing

Each module should allow separate installation and functional testing before the complete system is integrated.

Additional Information: The design should allow maintenance personnel to test and confirm that the installed module is functioning properly before the complete system is installed.[6636]

13.3.2.1-8 Installation and Calibration
Modules should require little or no calibration immediately after installation.[6636]

13.3.2.1-9 Interconnectivity
The number of inputs and outputs associated with a module should be minimized, where possible, to reduce the likelihood of errors in installing connections or testing multiple inputs and outputs.[6636]

13.3.2.1-10 Modularization Method
The modularization of digital equipment should be based on a systematic method that can be readily understood by maintenance personnel.
Additional Information: Modularization, dividing a unit of equipment into individual modules, is a design strategy for enhancing maintainability. The following lists modularization methods that were recommended for the commercial aviation industry, in order of preference: (1) logical flow packaging, (2) circuit packaging, and (3) component packaging. In logical flow packaging, circuits, parts, and components are packaged and arranged in correspondence with their functional relationships. In circuit packaging, all parts of a single circuit or logically related group of parts, and only that circuit or group, are placed in a separate module. In component packaging, similar parts or components are located together, for example, all the fuses or all the relays might be grouped together.[6636]

13.3.2.2-1 Isolating Module Faults via Single Input-Output Checks

When logical flow packaging is used to modularize digital equipment, a module should be designed so that only single input and output checks are necessary to isolate a fault in it.[6636]

13.3.2.2-2 Indication of Unidirectional Signal Flow

When logical flow packaging is used to modularize digital equipment, the unidirectional signal flow within a module should be clearly indicated.[6636]

13.3.2.3-1 Locating Parts in a Single Module

When circuit packaging is used to modularize digital equipment, all parts of a given circuit or group of logically related parts should be located in a single module to help personnel find and test them.
Additional Information: Testing and diagnosis may be difficult if related parts are distributed in different locations.[6636]

13.3.2.3-2 Only One Circuit or Group of Related Parts Per Module

When circuit packaging is used to modularize digital equipment, a module should contain only one circuit or group of related parts to support testing and diagnosis.
Additional Information: If a module contains multiple circuits or groups, then testing and diagnosis may be difficult (e.g., personnel may access the wrong parts when testing a circuit.)[6636]

13.3.2.3-3 Packaging a Circuit as a Single Terminal-Board or Plug-In Module

When circuit packaging is used to modularize digital equipment, the circuit should be packaged as a single terminal board or plug-in module, when possible, to support its testing and installation.
Additional Information: Providing a single board or module reduces the number of parts that must be handled and reduces the likelihood of errors during handling, testing, and installation.[6636]

13.3.2.3-4 Grouping Circuits to Minimize the Crossing of Signals

When circuit packaging is used to modularize digital equipment, circuits should be grouped to minimize criss-crossing of signals among modules.
Additional Information: When circuits are improperly grouped, crossed signals may result from handling errors. Furthermore, crossed signals can complicate fault detection and diagnosis.[6636]

13.3.2.4-1 Grouping Components with Similar Replacement Schedule

When using component packaging to modularize digital equipment, similar parts that are likely to require replacement at approximately the same time should be grouped together.[6636]

13.3.2.4-2 Grouping Components with Similar Servicing Requirements

When component packaging is used to modularize digital equipment, components requiring the same maintenance work should be grouped together, e.g., test points or components requiring a particular cleaning method.[6636]

13.3.2.5-1 Design for Removal and Replacement

Printed circuit boards should be designed and mounted for ease of removal and the elimination of errors during replacement.
Additional Information: The physical design should make it impossible to install a printed circuit board upside down or backwards.[6636]

13.3.2.5-2 Plug-In Printed Circuit Boards

Plug-in printed circuit boards should be structurally rigid and easy to remove and replace, providing finger access and gripping aids if necessary.[6636]

13.3.2.5-3 Feedback When Installing Plug-In Printed Circuit Boards

Feedback should be provided to the maintainer when plug-in printed circuit boards are securely connected.
Additional Information: For example, a tactile or audible "click" may indicate that the printed circuit board has been properly inserted.[6636]

13.3.2.5-4 Identification of Printed Circuit Boards and Parts

Printed circuit boards should be marked to identify the board and the parts mounted on it.
Additional Information: MIL-STD-130J (U.S. Department of Defense, 1997) has guidance for identifying printed circuit boards. MIL-STD-454 (U.S. Department of Defense, 1985) Requirement 67, gives guidance on providing references for parts mounted on a printed circuit board.[6636]

13.3.3.1-1 No Interference from Other Parts
Modules should be laid out so that all parts can be removed and replaced without interference from or removal of other parts.
Additional Information: Units that may have to be removed for maintenance should be situated so they can be moved without interference in straight horizontal or vertical paths.[6636]

13.3.3.1-2 No Stacking of Parts
To support accessibility, parts that make up a module should be mounted in an orderly, flat, two-dimensional array and should not be stacked one on top of another.
Additional Information: An orderly, two-dimensional array allows parts to be accessed individually. Stacking is not recommended because some parts must be removed to provide access to the parts located below or behind them.[6636]

13.3.3.1-3 Consistent Orientation
If a module has more than one part of the same type that must be inserted in a particular orientation, all such parts should be oriented in the same direction.
Additional Information: For example, a set of connectors should be installed with the same orientation.[6636]

13.3.3.1-4 Spacing of Parts
The parts that make up a module should be spaced and oriented so that required tools can be used without difficulty.
Additional Information: For example, the spaces between parts should accommodate the use of test probes or soldering irons. Parts should be oriented so they can be reached with the required tools.[6636]

13.3.3.1-5 Separation of Parts and Wiring on Printed Circuit Boards
To support accessibility for testing parts on printed circuit boards, all parts should be mounted on one side of the board and all wiring, including printed circuits, should be located on the other side.
Additional Information: Damage to circuit boards during testing can be avoided by making parts accessible.[6636]

13.3.3.1-6 Spacing of Terminals
Terminals to which wires are to be soldered should be far enough apart so that work on one terminal does not damage neighboring terminals or nearby parts.[6636]

13.3.3.1-7 Indicator Lights
If a module has indicator lights, it should be possible to change them from the front panel, without opening or removing the module.[6636]

13.3.3.1-8 Shutoff Switches
If the module contains emergency shutoff switches, they should be positioned within easy reach, and they should be located or guarded to prevent inadvertent operation.[6636]

13.3.3.1-9 Test, Adjustment, and Connection Points
Test points, adjustment points, and cable and line connectors should be located where the maintainer can see them easily and operate on them without interference.[6636]

13.3.3.2-1 Grouping Maintenance Display Devices

All maintenance display devices relevant to a particular task should be grouped together and located where they can easily be seen.[6636]

13.3.3.2-2 Separate Maintenance and Operational Display Devices

If a unit of equipment contains both maintenance and operational display devices, the two types of devices should be separated.[6636]

13.3.3.2-3 Separate Maintenance and Operational Displays in a Display Network

If a display device contains displays for both maintenance and operations personnel, then the maintenance displays should have a separate location in the display network.
Additional Information: Maintenance displays should not be located within the same part of the display network as operational displays because their presence may interfere with the ability of operators to promptly access operational displays. Displays used by maintenance personnel generally should not be accessible by operational personnel, unless operators need them to perform their tasks. Access to maintenance displays should be protected by passwords, key locks, or similar measures.[6636]

13.3.4-1 Support for Hinged Mounting

If a module is mounted on hinges, supports should hold the module in the "out" or "open" position.
Additional Information: Parts and wiring should be positioned so that they are not damaged during opening and closing; see Guideline 13.1.5-3.[6636]

13.3.4-2 Rests and Stands

If a module contains parts that might be damaged when it is moved into position for maintenance, it should include rests or stands that are integral with the construction of the module to protect those parts.[6636]

13.3.4-3 Preventing Mounting Errors by Physical Design

Modules should be designed so that it is physically impossible to mount them incorrectly.
Additional Information: Incorrect mounting includes reversal, mismating, and misaligning. Measures to prevent incorrect mounting include (1) incorporating keys or other aligning devices, (2) using asymmetrical mounting brackets, and (3) having asymmetrical mounting holes.[6636]

13.3.4-4 Controls

Modules should be mounted so that it is unnecessary to disconnect controls that may be needed for maintenance.[6636]

13.3.4-5 Front Access

Replaceable modules should be accessible through the front of the equipment, rather than the back, if the panel or console is not used by operators.
Additional Information: Convenient access can reduce the likelihood of damage during installation, replacement, and testing. However, if maintenance is to be performed on-line, then access to the module access should not interfere with plant operations.[6636]

13.3.4-6 Orientation of Modules within Cases

If a module has a case, the proper orientation of the module within its case should be obvious, preferably through the physical design of the case, rather than through labeling.[6636]

13.3.4-7 Connectors

Electrical connections between modules should be simple and minimize the demands for manual dexterity.
Additional Information: A plug-in connector requires minimal dexterity. Connectors requiring greater dexterity may be used when there are special requirements, such as holding power or sealing.[6636]

13.3.4-8 Standard Connectors

Connectors should be standardized as much as possible.
Additional Information: Standardization reduces the need for different techniques for using each connector and may reduce the likelihood of errors from using the wrong technique.[6636]

13.4-1 Location of Fuses and Circuit Breakers

Fuses and circuit breakers should be grouped in a minimum number of centralized, readily accessible locations for removal, replacement, and resetting.
Additional Information: Fuses should be located so they can be replaced without removing any other components.[6636]

13.4-2 Verification of an Open Circuit

An indication should be given when a fuse or circuit breaker has opened a circuit.[6636]

13.4-3 Individual Fused Units

Fuses or circuit breakers should be provided so that each unit of a system is separately fused and adequately protected from harmful variations in voltages that personnel may cause.[6636]

13.4-4 Worker Safety

Fuse installations should be designed so that only the neutral ("cold") terminal of the fuse can be touched.
Additional Information: Shocks received from equipment may injure maintenance workers or cause them to make sudden movements, which can damage equipment.[6636]

13.4-5 Safeguarding the Circuit

Fuses should be provided that safeguard the circuit if the wrong switch or jack position is used.[6636]

13.4-6 Easily Removed Fuse Holders

Fuse holder cups or caps should be easily removed by hand.
Additional Information: Fuse holder cups or caps should be of the quick-disconnect type rather than the screw-in type; they should be knurled and large enough to be handled easily. Replacing fuses should not require special tools, unless they are needed for safety.[6636]

13.4-7 Identifying Fuses and Circuit Breakers

Fuses and circuit breakers should be permanently labeled or marked.
Additional Information: The labeling or marking should be legible in the anticipated ambient work conditions. Both fuses and fuse holders should be labeled.[6636]

13.4-8 Indicating Fuse Ratings

A fuse's rating should be indicated on the fuse and adjacent to the fuse holder.
Additional Information: The rating should be in whole numbers, common fractions, such as ½, or whole numbers and common fractions, such as 2½ .[6636]

13.4-9 Identifying Affected Circuits

The area of equipment served by a fuse or circuit breaker should be identified.[6636]

13.5-1 Standard Labels
Equipment labels should be standardized as much as possible.[6636]

13.5-2 Information Content of Labels and Markings for Modules
Modules should be labeled or marked to supply information needed by maintainers.
Additional Information: Labels or markings used for modules should

- outline and identify functional groups of parts
- identify each part by name or symbol
- indicate direction of current or signal flow to aid troubleshooting
- identify the value and tolerance level of parts or test points, if applicable
- identify each part by a unique serial identification number [6636]

13.5-3 Visibility of Labels and Markings
Labels and markings on parts or in cabinets should be placed so that the maintainer can see them without having to move or remove anything.
Additional Information: The maintainer should not be required to remove parts or move wires to read labels and markings.[6636]

13.5-4 Consistent Placement of Labels and Markings
Labels and markings should be consistently placed in relation to the parts to which they refer.
Additional Information: This placement may be on, or immediately adjacent to, the part.[6636]

13.5-5 Luminescent Labels
If labels must be read under very low ambient light, they may be marked in phosphorescent colors.[6636]

13.5-6 Electrical Parts
Small electrical parts that are attached to mounting boards, such as resistors and capacitors, should be labeled or marked on the mounting boards.
Additional Information: Labeling and marking should appear on the mounting boards if the parts are too small to accommodate legible, salient labels and markings.[6636]

13.5-7 Identification of Parts
Parts should be identified with labels or markings.
Additional Information: Labels or markings should be placed either on the parts themselves or on the chassis or adjacent board. The following types of parts that should be labeled or marked:

- All parts identified by designations in drawings, schematics, and parts descriptions of the module
- All wires, sockets, plugs, receptacles, and similar parts designated in wiring diagrams of the module
- All replaceable mechanical parts
- All semi-fixed electrical items, such as fuses and ferrule-clipped resistors
- Items having critical polarity or impedance ratings [6636]

13.5-8 Identification of Terminals on Terminal Strips or Blocks
The terminals of terminal strips or blocks should be labeled on the strip or block, or on the chassis, adjacent to the terminals.[6636]

13.5-9 Identification of Terminals on Parts

When parts have terminals (e.g., transformers, relays, and capacitors), each terminal should be identified by an adjacent label.[6636]

13.5-10 Identification of Parts Accessible from Both Sides

Receptacles that are accessible from both sides of a board or panel should be identified on both sides.
Additional Information: Some boards and panels contain receptacles that allow parts to be accessed from either side.[6636]

13.5-11 Durability of Markings

Markings should be durable enough to last the life of the equipment.[6636]

13.5-12 Marking Stacked Parts

If parts or modules are stacked, marking should permit identification of the individual parts or modules.
Additional Information: Stacking of parts or modules is not recommended (see Guideline 13.3.3.1-2).[6636]

13.5-13 Marking Enclosed or Shielded Parts, Modules, Test Points, and Service Points

Enclosed or shielded parts, modules, test points, and service points should be marked both outside the enclosure or shield, and inside it.[6636]

13.5-14 Hazard Warnings

If there is any hazard from a part or module, a warning or caution label should be provided on it, on the case or cover, or both.[6636]

13.5-15 Labeling Symmetrical Parts

Parts that are symmetrical should be labeled or marked to indicate their proper orientation for mounting.[6636]

13.5-16 Insertion Holes

If a module has holes through which parts must be aligned and then inserted, labels showing the proper orientation of the part should be placed adjacent to the holes.
Additional Information: Tubes and connectors are examples of parts that may be inserted through holes in modules.[6636]

13.5-17 Auxiliary Information for Parts

Parts to which auxiliary information applies should be labeled with that information.
Additional Information: Examples of auxiliary information include values and tolerances of resistors and capacitors. This information should be in an easily readable form.[6636]

13.6-1 Misalignment
Controls and displays should be designed to prevent misalignment that might be caused by vibration, service use, or accidental contact.[6636]

13.6-2 Controls and Feedback
Each adjustment control should provide feedback.
Additional Information: This feedback might be visual, audible, or tactile.[6636]

13.6-3 Simultaneous Access to Controls and Displays
Maintainers should have simultaneous access to an adjustment control and its associated display or other source of feedback.
Additional Information: Maintainers should be able to observe the effects of adjustments as they are made.[6636]

13.6-4 Differentiating Maintenance Controls from Operational Controls
Maintenance and operational controls should be clearly differentiated.[6636]

13.6-5 Location of Maintenance and Operational Controls
The maintenance and operational controls should not appear on the same panel if maintenance and operation of a unit of equipment are performed by different sets of people.
Additional Information: If maintenance and operational controls must appear on the same panel, the maintenance controls should be grouped and separated from the operational controls. If appropriate, the maintenance controls might also be guarded with removable covers so as not to interfere with the operator's performance.[6636]

13.6-6 Independence of Adjustment Controls
Where possible and practical, the adjustment of one control should be independent of the adjustments of others.[6636]

13.6-7 Sequential Adjustments
If the adjustment of one control affects the adjustment of another, the controls should be arranged in sequential order, and labeled or marked to indicate the order of adjustment.[6636]

13.6-8 Functionally Related Adjustments
If a single control is used to affect multiple variables, then the user interface should be designed to prevent mode errors.

Additional Information: Mode errors occur when the user performs an action that is appropriate for one mode when a different mode is in effect. Four design strategies for preventing mode errors are eliminating modes, making modes distinct, providing different inputs for different modes, and coordinating inputs across modes. Eliminating modes prevents mode errors by eliminating the conditions under which they occur (i.e., if there are no modes there can be no mode errors). Making modes distinct deals with the problem through feedback. By saliently indicating the currently active mode, operators are more likely to be aware of it and less likely to provide an incompatible input. Providing different inputs for different modes addresses the problem by ensuring that the same input is not valid in more than one mode. Thus, if the operator provides an input while in the wrong mode, the system will not accept it. Coordinating inputs across modes ensures that a command producing a benign effect in one mode does not produce a severely negative effect in another mode.[6636]

13.6-9 Degree of Adjustment
Controls should accommodate the degree of adjustment required; that is, gross adjustment, fine adjustment, or both.[6636]

13.6-10 Mechanical Stops
Adjustment controls intended to have a limited range of motion should have mechanical stops.
Additional Information: These stops should be able to withstand a force or torque 100 times greater than the resistance to movement within the range of adjustment.[6636]

13.6-11 Previous Settings
If a task requires that a maintainer be able to quickly return a control to its previous setting, the control should have a scale and pointer, or equivalent.[6636]

13.6-12 Preventing Inadvertent Adjustment
Adjustment controls should be located and mounted so that they cannot be adjusted inadvertently.[6636]

13.6-13 Critical or Sensitive Adjustments
Critical or sensitive adjustments should incorporate features, such as locking devices, to prevent inadvertent or accidental adjustment.
Additional Information: If a locking device is used, its operation should not change the adjustment setting.[6636]

13.6-14 Hand or Arm Support
If an adjustment control or the maintainer will be subject to vibration during adjustment, a suitable hand or arm support should be provided.
Additional Information: Vibrations can cause the maintainer to overshoot or undershoot the desired adjustment value.[6636]

13.7.1-1 Ease of Servicing

Equipment should be designed so that it can be serviced in its installed position to prevent errors associated with disassembling and reassembling it.[6636]

13.7.1-2 Appropriate Use of Test Points

Test points should be provided on units of equipment as required to support personnel in checking, adjusting, and troubleshooting it.
Additional Information: Strategically placed test points make signals available to maintenance personnel. Test points may not be required if the equipment has self-checking capabilities.[6636]

13.7.1-3 Single Adjustment Control Per Test Point

A test point should not have more than one associated adjustment control.[6636]

13.7.1-4 Ground Points

Special grounding points should be provided, as needed, in locations in which surfaces have poor electrical grounding characteristics.
Additional Information: Maintainers may have difficulty if only painted surfaces are available for ground connections.[6636]

13.7.2-1 Test Points for Units of Equipment

Where possible, each input to and output from a unit of equipment should have test points to support testing and diagnosis of faults.[6636]

13.7.2-2 Tracing Signals

Test points should be provided to permit the systematic tracing of signals and voltages through a unit of equipment to support fault detection and diagnosis.
Additional Information: These test points allow a maintainer to determine the point at which signals or voltages in a malfunctioning unit are out of tolerance.[6636]

13.7.2-3 Test and Service Point Accessibility

All test and service points should be visible and physically accessible to the maintainer for checking and troubleshooting.
Additional Information: Recommended minimum clearances are 19 mm (0.75 in) when only finger control is required, and 75 mm (3 in) when using gloves.[6636]

13.7.2-4 Proximity of Controls, Displays, and Test Points

Test points should be located in physical and visual proximity to the controls and displays used to make the adjustments.
Additional Information: The adjustment control should provide a signal detectable at the test point that clearly indicates when the correct adjustment has been made.[6636]

13.7.2-5 Proximity of Controls, Displays, and Service Points

Service points should be located in physical and visual proximity to the controls and displays used when adjusting them.[6636]

13.7.2-6 Test and Service Point Location

Test and service points should be provided, designed, and located in accordance with their frequency of use and any time-limits on maintenance.
Additional Information: Isolated test or service points should be avoided because they are likely to be overlooked or neglected.[6636]

13.7.2-7 Compatibility of Test and Service Points

Test and service points should be designed for compatibility with checking, troubleshooting, and servicing procedures, and with test and service equipment.[6636]

13.7.2-8 Distinctive Connections

Each type of test or service equipment should have distinctively different connectors or fittings to minimize the likelihood of error.
Additional Information: Providing visually distinct connectors or fittings for different types of test and service equipment may reduce the likelihood that a maintainer will mistake one type for another. Physical differences between different types of connectors and fittings may prevent a maintainer from connecting the wrong piece of test or service equipment, if it is physically incompatible with the test or service connector or fitting.[6636]

13.7.2-9 Distinguishable Marking

Test and service points should be designed and marked so that they are easily distinguishable from each other.

Additional Information: If color coding is used, the color of test points should clearly differ from that of service points.[6636]

13.7.3-1 Access Openings for Test Equipment

Access openings necessary to connect test equipment should accommodate maintainers, equipment, and required tools.[6636]

13.7.3-2 Test Probe Guides

Suitable guides for test probes should be provided when test points are located internally to an enclosure.
Additional Information: When a maintainer inserts a test probe through an opening in an enclosure, a guide can help the test probe make contact with the internal test point.[6636]

13.8.1-1 Built-In Test Capabilities

All test capabilities for a unit of equipment should be built in, to the extent feasible, to reduce the likelihood of testing errors.

Additional Information: Built-in test capabilities can avoid errors associated with disassembling plant equipment or connecting test equipment. The handling involved with removing and transporting a component to a test site may introduce new faults in sensitive equipment. Built-in diagnostics and testing features allow equipment to be tested in place. If it is not practical or possible to incorporate all test equipment, then test jacks may be provided to allow internal components to be tested by external test devices without disassembling the plant equipment.[6636]

13.8.1-2 Appropriate Use of Alarms

If critical equipment is not regularly monitored, an alarm should be provided to indicate malfunctions or conditions that would cause personnel injury or equipment damage.

Additional Information: The alarm may be auditory, visual, or both. If an auditory alarm would be overly intrusive or disruptive, the alarm should be visual. A combination of auditory and visual alarms should be provided when the ambient illumination may impair the maintainer's ability to see the latter. A high degree of ambient illumination may cause visual glare, affecting the detection of light-emitting alarms. A low degree of ambient illumination may interfere with their ability to detect and read alarms on light-reflecting displays.[6636]

13.8.1-3 Accuracy of Test Equipment

The accuracy of test equipment should be consistent with testing requirements.

Additional Information: In general, the accuracy of test equipment should exceed that of the equipment being tested.[6636]

13.8.1-4 Instructions

Clearly written and easily understandable operating instructions for the test equipment should be available to the maintainer.[6636]

13.8.1-5 Labels

Equipment labels should identify all items the maintainer must be able to recognize, read, or use.

Additional Information: The test equipment should be labeled to identify the equipment, its purpose, and any precautions that should be observed in its use. There should be adequate warnings wherever potential hazards exist.[6636]

13.8.1-6 Minimizing Errors

The test equipment should be designed to minimize the occurrence of errors by the maintainer.

Additional Information: If possible, it should provide messages to support the detection of errors.[6636]

13.8.1-7 Minimizing Hazards

When possible, fail-safe features should be incorporated in test equipment to minimize dangers to maintainers or equipment.

Additional Information: For example, test equipment should have fuses or other protective features to prevent damage or injury if a wrong switch or jack position is used.[6636]

13.8.2.1-1 Automated Aids

Fault isolation, inspection, and checkout tasks should be automated to the extent practical to support personnel performance.

Additional Information: These tasks are prone to human error. At a minimum, self-check diagnostic tests should operate automatically on power up of plant equipment and at the operator's request.[6636]

13.8.2.1-2 On-Line Diagnostics

Computer systems should have on-line diagnostic capabilities, if the detection and diagnosis of computer faults is required.

Additional Information: The detection and diagnosis of computer faults can be complicated and difficult. On-line diagnostic capabilities, which allow computer systems to be tested while they are running, can be effective for finding faults because they test the computer under operating conditions. On-line diagnostic capabilities should be able to check both hardware and software when the symptoms may appear similar to maintenance personnel. Checks may be used to detect software malfunctions and unauthorized changes in software.[6636]

13.8.2.2-1 Continuous On-Line Self-Testing

The capability for continuous on-line self-testing should be provided when practicable to support prompt detection of faults.

Additional Information: Continuous on-line self-testing allows tests to be performed with minimal involvement by personnel, and can reduce the amount of time between the occurrence and the detection of a fault. Tests may include, but should not be limited to, random access memory and read-only memory failure checks, arithmetic processing unit failure checks, data link buffer checks, and central processing unit reset of watchdog timers. For safety-related systems, testing features should be designed to reduce the complexity of safety-related software logic and data structures.[6636]

13.8.2.2-2 Periodic Testing

The capability for periodic functional testing that is manually initiated but executed automatically should be provided when personnel require control of the test intervals.

Additional Information: Automatic execution of tests is preferred when human errors may cause transients.[6636]

13.8.2.3-1 Automatic Bypass

When a test is initiated manually, the correct bypasses required for testing should be established automatically, and the operators should be aware of all of them.
Additional Information: When a component is tested, it may be necessary to bypass other systems or functions associated with the component to prevent them from being affected. The operators should be made aware of these bypasses.[6636]

13.8.2.3-2 Indicators for Test and Bypass Status

Local indication of pass or fail for test and bypass status should be provided for periodic functional tests.
Additional Information: Indicators should be provided at the local cabinet to quickly show the pass or fail status for the test, and the status of bypasses.[6636]

13.8.2.3-3 Removal of Automatic Bypass

When a periodic functional test sequence is completed, all bypasses established to allow the test to be performed should be automatically removed, to relieve the operator of this task.
Additional Information: Indications should be given to allow operators to verify the status of the bypasses and that the system has been properly reconfigured for normal operation. Removal of automatic bypasses may reduce the potential for errors that could unintentionally activate equipment.[6636]

13.8.2.3-4 Bypassed Diagnosis Routines

To support the diagnosis of faults, diagnosis routines that are bypassed during maintenance should be run again before equipment is put back in service.
Additional Information: When a component is serviced, it may be necessary to disable some automatic diagnosis routines. Running the routines before the equipment is put back into service ensures that they are available. It also supports the detection of any faults that may have occurred during testing. Failure to restore the diagnostic routines may increase the time required to detect future faults.[6636]

13.8.2.4-1 Loss of Redundancy

If part of a redundant system, unit of equipment, module, or component becomes inoperable, an alarm signaling the loss of redundancy should be provided to the user immediately.
Additional Information: Users should be able to acknowledge such an alarm, but the lack of available redundancy should be continuously displayed until the redundant system, equipment, module, or component becomes operable again.[6636]

13.8.2.4-2 Overload Indications

Overload indications should be provided for equipment subject to this condition.
Additional Information: This indication should be provided even if the equipment continues to operate when overloaded.[6636]

13.8.2.4-3 Identification of Acceptable Ranges

When practical, the ranges for which test values are within acceptable limits should be indicated on built-in test equipment.
Additional Information: For example, an acceptable reading for a meter or an acceptable wave shape for an oscilloscope should be coded for each position of the rotary switch of the built-in test equipment.[6636]

13.8.2.4-4 Out-of-Range Indicators

If equipment has failed or is not operating within acceptable limits, an indication should be provided.[6636]

13.8.2.4-5 Power Failure Indicators

If a power failure occurs, an indication should be given.
Additional Information: A power-on indicator that extinguishes with loss of power should be provided. If a fuse or circuit breaker has opened a circuit, there should be an indication.[6636]

13.8.2.5-1 Inclusion of Fault Messages

Fault messages should only be shown if they add value to the maintenance process.
Additional Information: The presence of unnecessary fault messages can reduce the effectiveness of maintenance personnel by increasing the workload associated with locating and using messages that support diagnosis and repair. The flexibility of computer-based technologies and the needs of secondary users of the maintenance system can result in the inclusion of variables and capabilities that do not support the performance of primary users. Limiting messages to those that are valuable to the maintenance process can help personnel use the automated test equipment effectively. The status of some variables can be determined by direct observation without using automated test equipment. The appropriateness of including these variables in a test device should be based on consideration of their effects on maintenance performance. Thus, the burdens associated with viewing additional variables should be weighed against the potential benefits of having fault indications consolidated in a test device.[6636]

13.8.2.5-2 Direct Interpretation of Test Results

Messages provided by test equipment should require a minimum amount of interpretation.
Additional Information: Messages provided by test equipment should not use abbreviations, contractions, or numeric codes. Conversion tables should not be needed to determine whether the equipment is within tolerances. Test equipment that requires maintenance personnel to read codes and then look up the code on a table to obtain an explanation are susceptible to errors in reading, recording, and looking up the codes.[6636]

13.8.2.5-3 Identification of Failure Location

Test features should identify the location of the detected failure to the lowest replaceable module.
Additional Information: Test equipment should also inform maintenance personnel of the types of actions required to return the equipment to service. For example, even though the failure exists in component A, the corrective action may require that components B, C, and D be replaced at the same time.[6636]

13.8.2.5-4 Identification of Out-of-Tolerance Signals on Collating Test Equipment

If equipment fails a test performed by collating test equipment, the test equipment should indicate which signal(s) are out of tolerance.
Additional Information: Collating test equipment presents the results of two or more checks as a single display; for example, a "test passed" light illuminates only if all of the relevant signals are within tolerance. Collating test equipment reduces the number of displays the maintainer must read, thereby reducing testing time. However, it should identify the out-of-tolerance signal(s) rather than merely indicating that the equipment failed the test.[6636]

13.8.3.1-1 Requirements for Test Equipment and Bench Mockups
Test equipment and bench mockups should be treated like any other equipment with respect to the HFE design requirements for units, covers, cases, cables, connectors, test points, displays, and controls.
Additional Information: Test equipment and bench mockups should be designed to be consistent with the capabilities of users and to prevent personal injury.[6636]

13.8.3.1-2 Selector Switches
Selector switches should be used rather than many, individual plug-in connections as long as the effects of switching do not degrade the desired information.
Additional Information: When connecting test equipment to particular circuits, selector switches can be used more quickly than many, individual plug-in connections, and can reduce the likelihood of incorrect or faulty connections.[6636]

13.8.3.1-3 Minimizing Test Equipment Accessories
The number and types of test equipment accessories, such as connectors and test cables, should be minimized.[6636]

13.8.3.1-4 Minimizing Test Equipment Controls, Displays, and Modes
Test equipment should be simple to operate and have a minimum number of controls, displays, and modes.
Additional Information: Controls and displayed information should be organized to reduce the amount of mental effort required to find, access, and use them. Test equipment should not have many individual control and display devices that the maintainer must coordinate to operate it. However, their number should not be reduced to such a degree that many control and display modes are introduced, which can create opportunities for mode errors.[6636]

13.8.3.1-5 Reducing the Number and Complexity of Steps
The number and complexity of steps required to operate the test equipment should be minimized.
Additional Information: The number and complexity of steps may be reduced by grouping controls, such as by sequence or criticality, or by automating certain operations.[6636]

13.8.3.1-6 Individual Operation
Test equipment should be designed for operation by one person, if practical.[6636]

13.8.3.1-7 Calibration Check
Test equipment should be easily calibrated or equipped with a simple check to indicate whether or not it is out-of-calibration or malfunctioning.
Additional Information: A go/no-go indicator may provide a simple check of the status of the test equipment.[6636]

13.8.3.1-8 Avoid Temporary Equipment Configurations for Testing
The use of temporary equipment configurations for periodic, functional testing of equipment should be avoided.
Additional Information: Temporary equipment configurations include added jumpers, lifting leads, and swapping cables. Built-in test features may alleviate problems experienced in NPPs that result from designs with poor testability.[6636]

13.8.3.2-1 Portable Diagnostic Tools

Portable diagnostic equipment should be provided to aid in fault isolation when built-in equipment is not practical.

Additional Information: Built-in equipment is generally preferable to portable equipment when it eliminates activities prone to error, such as disassembling plant equipment or connecting portable test equipment.[6636]

13.8.3.2-2 Ease of Connection

Portable test equipment should allow rapid and error-free connection to the equipment being tested.

Additional Information: The use of a single, multi-prong connector can avoid errors that could occur if multiple wires were connected individually.[6636]

13.8.3.2-3 Calibration Information

If maintenance personnel are required to verify that test equipment has been calibrated, then this information should be available to them.

Additional Information: A calibration record may be attached to the equipment with this information.[6636]

13.8.3.3-1 Test Point Connections

Test points should permit the connection of the appropriate test equipment, such as voltage meters.
Additional Information: The purpose of a built-in test panel is to allow external test devices to assess internal components without disassembling the plant equipment.[6636]

13.8.3.3-2 Test Point Indication Labeling and Demarcation

Test points should be clearly indicated on the test panel.
Additional Information: For example, test points might be arranged within a miniature block diagram of the system with each block representing components or units of equipment. As another example, an overlay may be provided to indicate the test points that should be checked, the order in which they should be checked, and the tolerance limits for signals.[6636]

APPENDIX A

High-Level Human-System Interface Design Review Principles

Appendix A
High-Level Human-System Interface Design Review Principles

The design of human-system interfaces (HSIs) should support the operating personnel's primary task of monitoring and controlling the plant, without imposing an excessive workload associated with using the HSI (window manipulation, display selection, and navigation, for example). The HSI also should support the recognition, tolerance, and recovery from any human errors. HFE guidelines for design review help to ensure that these goals are achieved. The "high-level" design-review principles contained in this appendix represent the generic HSI characteristics necessary to support personnel performance. While these principles are not detailed review *guidelines*, they serve several purposes. First, they were used to develop many of the detailed review guidelines in this volume. Second, as general principles, they can be used to support the evaluation of aspects of the HSI not well defined by the detailed guidelines. Thus, for example, they can be used in reviewing novel HSI designs, such as display formats not identified in the guidelines. Third, they can support the evaluation of the significance of individual discrepancies in the guideline.

The 18 principles are divided into four categories: general principles, primary task design, secondary task control, and task support (summarized in Table A.1). The categories and the principles that comprise them are described below.

Table A.1 Design review principles

Category	Principle
General	Personnel Safety Cognitive Compatibility Physiological Compatibility Simplicity of Design Consistency
Primary Task Design	Situation Awareness Task Compatibility User Model Compatibility Organization of HSI Elements Logical/Explicit Structure Timeliness Controls/Displays Compatibility Feedback
Secondary Task Control	Cognitive Workload Response Workload
Task Support	Flexibility User Guidance and Support Error Tolerance and Control

A.1 General Principles

These principles ensure that the HSI design supports personnel safety, and is compatible with their general cognitive and physiological capabilities.

- *Personnel Safety* – The design should minimize the potential for injury and exposure to harmful materials.
- *Cognitive Compatibility* – The operator's role should consist of purposeful and meaningful tasks that enable personnel to maintain familiarity with the plant and maintain a level of workload that is not so high as to negatively affect performance, but sufficient to maintain vigilance.
- *Physiological Compatibility* – The design of the interface should reflect consideration of human physiological characteristics including visual/auditory perception, biomechanics (reach and motion), characteristics of motor control, and anthropometry.
- *Simplicity of Design* – The HSI should represent the simplest design consistent with functional and task requirements.
- *Consistency* – There should be a high degree of consistency between the HSI, the procedures, and the training systems. At the HSI, the way the system functions and appears to the operating crew always should be consistent, reflect a high degree of standardization, and be fully consistent with procedures and training.

A.2 Primary Task Design

These principles support the operator's primary task of process monitoring, decision-making, and control to maintain safe operation.

- *Situation Awareness* – The information presented to the users by the HSI should be correct, rapidly recognized, and easily understood (e.g., "direct perception" or "status at a glance" displays) and support the higher-level goal of user awareness of the status of the system.
- *Task Compatibility* – The system should meet the requirements of users to perform their tasks (including operation, safe shutdown, inspection, maintenance, and repair). Data should be presented in forms and formats appropriate to the task (including the need to access confirmatory data or raw data in the case of higher-level displays), and control options should encompass the range of potential actions. There should be no unnecessary information or control options.
- *User Model Compatibility* – All aspects of the system should be consistent with the users' mental models (understanding and expectations about how the system behaves as developed through training, use of procedures, and experience). All aspects of the system also should be consistent with established conventions (i.e., expressed in customary, commonplace, useful and functional terms, rather than abstract, unusual or arbitrary forms, or in forms requiring interpretation).
- *Organization of HSI Elements* – The organization of all aspects of the HSI (from the elements in individual displays, to individual workstations, to the entire control room) should be based on user requirements and should reflect the general principles of organization by importance, frequency, and order of use. Critical safety-function information should be available to the entire operating crew in dedicated locations to ensure its recognition and to minimize data search and response.
- *Logical/Explicit Structure* – All aspects of the system (formats, terminology, sequencing, grouping, and operator's decision-support aids) should reflect an obvious logic based on task requirements or some other non-arbitrary rationale. The relationship of each display, control, and data-processing aid to the overall task/function should be clear. The structure of the interface and its associated navigation aids should make it easy for users to recognize where they are in the data space and should enable them to get rapid access to data not currently visible (e.g., on other display pages). The way the system works and is structured should be clear to the user.

- *Timeliness* – The system design should take into account users' cognitive processing capabilities as well as process-related time constraints to ensure that tasks can be performed within the time required. Information flow rates and control performance requirements that are too fast or too slow could diminish performance.
- *Controls/Displays Compatibility* – Displays should be compatible with the data entry and control requirements.
- *Feedback* – The system should provide useful information on system status, permissible operations, errors and error recovery, dangerous operations, and validity of data.

A.3 Secondary Task Control

These principles minimize secondary tasks, i.e., tasks that personnel perform when interacting with the human-system interface that are not directed to the primary task. Examples of secondary tasks include activities associated with managing the interface, such as navigation through displays, manipulating windows, and accessing data. Performing secondary tasks detracts from the crew's primary tasks, so the demands of secondary tasks must be controlled.

- *Cognitive Workload* – The information presented by the system should be rapidly recognized and understood; therefore, the system should minimize requirements for making mental calculations or transformations and use of recall memory (recalling lengthy lists of codes, complex command strings, information from one display to another, or lengthy action sequences). Raw data should be processed and presented in directly usable form (although raw data should be accessible for confirmation).
- *Response Workload* – The system should require a minimum number of actions to accomplish an action; e.g., single versus command keying, menu selection versus multiple command entry, single input mode (keyboard, mouse) versus mixed mode. In addition, the system should not require the entry of redundant data, nor the re-entry of information already in the system, or information the system can generate from already resident data.

A.4 Task Support

These principles address the characteristics of the HSI that support its use by personnel, such as providing (1) HSI flexibility so tasks can be accomplished in more than one way, (2) guidance for users, and (3) mitigation of errors.

- *Flexibility* – The system should give the user multiple means to carry out actions (and verify automatic actions) and permit displays and controls to be formatted in a configuration most convenient for the task. However, flexibility should be limited to situations where it offers advantages in task performance (such as to accommodate different levels of experience of the users); it should not be provided for its own sake because there is a tradeoff with consistency and the imposition of interface management workload (which detracts from monitoring and operations tasks).
- User Guidance and Support – The system should provide an effective "help" function. Informative, easy-to-use, and relevant guidance should be provided on-line and off-line to help the user understand and operate the system.
- Error Tolerance and Control – A fail-safe design should be provided wherever failure can damage equipment, injure personnel, or inadvertently operate critical equipment. Therefore, the system should generally be designed such that a user error will not have serious consequences. The negative effects of errors should be controlled and minimized. The system should offer simple, comprehensible notification of the error, and simple, effective methods for recovery.

APPENDIX B

Design Process Guidelines

Appendix B
Design Process Guidelines

Guidelines for reviewing important considerations in the design process aspects of information displays, user interface interaction and management, and computer-based procedure systems are provided in Sections B.1, B.2, and B.3, respectively. (See the Preface for additional information on the purpose of these guidelines).
The review guidelines were formatted to correspond to the NRC's general design process guidelines in NUREG-0711.

B.1 Review Guidelines for the Information Display Design Process

B.1.1 Operating Experience Review (OER)

(1) Available operating experience with advanced information systems should be reviewed to take advantage of lessons learned in the operational use of the systems, as well as to ensure that problematic aspects of their design implementation are addressed.

B.1.2 Function and Task Analysis

(1) The function analysis and task analysis criteria by which information requirements are defined should be clearly documented.

(2) The information requirements established in advanced graphical displays should be based on the operators' cognitive tasks (i.e., situation assessment, monitoring and detection, response planning and response implementation).

(3) The analysis of information requirements should consider the different needs of individual staff in the control room.

B.1.3 Human-System Interface Design

(1) Explicit guidance should be available defining the relationship between the physical form of the display and its meaning with respect to the plant's status.

(2) The information presented and its organization into display pages should be based on considering operators' tasks when using the displays. Display pages should include as much information as can be efficiently represented and interpreted to minimize the need for operators to retrieve additional pages.

(3) When more than one display format is used on a display page, an evaluation should determine whether the user's perception of one format is negatively impacted by the presence of the other one(s).

(4) The density of information on a display page should be evaluated to ensure that important information is readily perceived, and needed information is rapidly identified.

(5) The organization scheme of display pages within the network should be readily apparent to operators.

(6) The effects of instrumentation failures on graphic displays should be analyzed. Potential failure problems should be evaluated with respect to the following:

- Can operators detect a failure of instrumentation?
- Can instrument failures result in representations that are interpreted by operators as real process failures; perhaps more importantly, can real process failures be misinterpreted as instrument failures?
- If operators detect a failure, should use of the display be suspended?
- Since the display integrates many parameters into a single display, what effect does its loss have on operations and how effectively can operators transition to backup displays?

(7) Access to displays within a network should be evaluated to ensure rapid, efficient retrieval of information needed to support operators' tasks.

(8) Unwanted effects of integrating a new, novel graphic representation into a conventional HSI (other displays, other control room HSIs, and environmental considerations such as lighting levels) should be evaluated and minimized.

(9) The following aspects of information system design should be carefully analyzed and evaluated:

- Number of VDUs – to ensure that the display area is sufficient to show the important information needed by operators without them having to perform extensive interface management
- Interface management functions – to ensure that the HSI features are easy to use and provide explicit interface management support
- Flexibility of HSI and display features and functions – to ensure that the flexibility of the system does not unduly burden operators, nor increase the chance of misunderstandings and errors.

(10) Methods should be specified for assuring that plant modifications (such as changes in instrumentation or systems) are incorporated into the display and do not introduce inconsistencies in how they correspond to plant situations, or lead to technical inaccuracies and, possibly, invalid displays.

(11) If display formats are developed for a generic plant design or as an "off-the-shelf" product, any plant-specific inputs to display characteristics need to be analyzed to ensure that the display correctly reflects the relationship between changes in the display format and the changes in the specific plant it is intended to represent.

B.1.4 Training Program Development

(1) The knowledge, skills, and abilities that the operators need to use and understand the information system should be specified.

(2) Operators should be trained on the relationship between the display form and the plant states it is intended to represent, including failure modes and their effect on graphical representation.

(3) Users should be trained in using the interface management features of the information system, including navigation within and between displays, manipulation of on-screen features such as windows, and use of user-definable characteristics and features.

(4) Users should be trained to an acceptable level of proficiency with unfamiliar graphic displays before using them in the control room to ensure that operators are sufficiently familiar with them to correctly assess their meaning.

B.2 Review Guidelines for the User Interface Interaction and Management Design Process

B.2.1 Function and Task Analysis

(1) Analyses of function allocation should be performed for new or modified interface management functions that are associated with important personnel actions. These analyses should consider the effects of new or changed interface management functions on crew situation awareness and workload. Opportunities to automate aspects of interface management to reduce its demands on personnel should be identified.

(2) Task analyses should identify requirements for managing multiple, concurrent tasks, especially during high workload conditions, including factors that affect the pace of tasks, requirements for alternating concurrent tasks, demands for detecting changes and shifting attention, and resulting workload. Operator activities addressed by these analyses should include concurrent access to information and controls, keeping track of in-progress and suspended tasks, anticipating future demands, and coordinating and communicating with other personnel. These analyses should provide a basis for HSI characteristics, including: (1) the types of information and controls that should be presented together on display pages, (2) types of display pages that should be presented together in display networks, (3) the number and placement of display devices (VDUs) in the HSI. These analyses should also provide a basis for the types of interactions between the users and the HSI that are to be supported by the HSI design.

(3) Task analyses should identify specific interface management skills that users will need for managing multiple, concurrent tasks, especially during high workload conditions. These analyses should assess the current skills and skill levels and determine any increment that will be required from formal and on-the-job training.

(4) If a HSI is modified, then the task analyses should address strategies and skills used by personnel in the existing HSI configuration to access and use information and controls. Strategies that users employ for modifying the HSI or adjusting it for particular tasks should be noted for possible inclusion in the HSI design goals. When user modifications and adjustments of the HSI are identified that represent weaknesses of the current design, these weaknesses should be corrected through the design goals for the upgrade. When they represent desirable dimensions of HSI flexibility that should be retained by the HSI upgrade, these desirable dimensions should be identified in the HSI design goals.

(5) Task analyses should identify requirements for multiple individuals to interact with shared displays and controls. These analyses should provide a basis for HSI features that support crew interaction, including group-view displays and methods of human-system interaction that support the sharing of controls and displays. These analyses should also provide a basis for determining training requirements for the use of shared displays and controls.

(6) Task analyses should be conducted to assess the potential effects of interface management tasks on the performance of primary (supervisory control) tasks. These analyses should address demands

associated with use of the interface management features. These analyses should also address tasks associated with malfunctions of the HSI.

B.2.2 Human Reliability Analysis

(1) Human reliability analyses (HRA) should be performed when the introduction of HSI technologies are likely to change interface management demands associated with risk-important tasks to determine the potential impact on reliability. The scope of these human reliability analyses should address personnel actions resulting from the HSI technologies and their interactions with the rest of the plant. Consideration should be given to the effects that changes in the HSI may have on the existing plant HRA, including:

- Whether the original HRA assumptions are valid for the upgraded design
- Whether the human errors analyzed in the existing HRA are still relevant to the upgrade
- Whether the probability of errors by plant personnel may change
- Whether new errors not modeled by the existing HRA and PRA may be introduced
- Whether the consequences of errors established in the existing HRA may change.

B.2.3 Human-System Interface Design

B.2.3.1 HSI Design Process Inputs

(1) Design goals and requirements for interface management features should be derived from analyses of user tasks. These analyses should address: information and control capabilities required by users, requirements for managing multiple concurrent tasks, requirements for multiple individuals to interact with shared displays and controls, and backup information and control capabilities for coping with malfunctions of the HSI. If the HSI component or system will be installed as an upgrade to an existing HSI, then the design goals and requirements should also be derived from analyses of strategies and skills used by personnel in the existing HSI configuration to access and use information and controls.

B.2.3.2 HSI Design Guidance Development

(1) HFE guidelines should be developed and used that specifically address the design of interface management features.

B.2.3.3 HSI Detailed Design and Integration

(1) *General Considerations* – Design requirements should define the types of human-system interactions to be provided to support interface management. The HSI should be designed to reduce cognitive demands associated with interface management tasks so that interference is reduced (1) between interface management tasks and primary tasks, and (2) between multiple interface management tasks that are performed concurrently. By facilitating concurrent task performance, the overall level of operator performance can be increased. The following are specific considerations:

- Simplicity and Ease of Use – Reducing the overall level of cognitive demands required for individual interface management tasks can make cognitive resources available for other concurrent tasks.

- Clear Designation of Tasks – Ambiguity in the presentation of display formats and elements can lead to errors in which the wrong operator response is produced (e.g., as in capture and description errors). These errors may result in the operator performing a plant control action when an interface management action was intended or performing one interface management task when another was intended. Conscious efforts by operators to avoid these errors can increase the overall level of mental workload and divert cognitive resources from other tasks.
- Consistency of Operation – A lack of consistency in the rules of operation for user interfaces can increase mental workload demands because the operator must first recognize the user interface and then retrieve the proper rule from memory. This increased mental workload can interfere with concurrent task performance.

(2) *Display Area* – Analyses should be conducted to determine the number and placement of display devices based on the task requirements of personnel. Design requirements for the number of display devices should reflect the maximum number of tasks that each operator will be performing at one time and the maximum number of display pages that must be viewed concurrently to support those tasks. Design requirements for the placement of display devices should reflect the needs of personnel to use these displays in a coordinated manner, such as integrating information across multiple displays or monitoring multiple displays simultaneously. These determinations should ideally be made after the requirements for the individual display pages and display network have been established.

(3) *Display Density* – Analyses should be conducted to determine the density of information that can be provided in a display.

(4) *Information Organization* – Design requirements for the new HSI component or system should include: (1) information and controls that should be presented together on display pages, and (2) display pages that should be located near each other in the display network. Design decisions regarding the layout of display pages and the display network should be based on analyses that consider the operator's need to view and use related items (i.e., information and controls) together. Both the display pages and the display network should be designed to increase the proximity of related items and minimize information access cost (i.e., the time and attention required for accessing them). Items that must be used together should be located on the same display page. Display pages that are used together or in sequence should have minimal navigation distance between them in the display network.

(5) *HSI Flexibility* – Design decisions regarding the type and degree of flexibility provided in the HSI for interface management should be based on considerations of human performance costs to individual operators. These include: (1) interface management demands, such as the degree to which workload associated with using the HSI flexibility feature diverts cognitive resources from the primary tasks, and (2) the effects that the flexibility have on the primary task (i.e., the degree to which the changes to the HSI brought about by the flexibility feature impair the operator's ability to perform the primary tasks). Features should be provided as a result of careful analyses of task requirements, the level of expertise of the user population regarding interface management, and the performance benefits and costs associated with the use of the HSI flexibility feature. The design of HSI flexibility features should address the need to optimize operator performance under specific conditions and should be consistent with the skills and knowledge of the user population. Flexible features should not be provided as a way of avoiding analyses of user requirements. That is, the work of analyzing operator requirements should not be avoided by providing a design that can be used in many different ways. These analyses should consider the effects that HSI flexibility may have on HSI consistency (i.e., whether it will cause part of the HSI to look or operate inconsistently with the rest of the HSI). These

analyses should also consider human performance benefits associated with the HSI flexibility feature in light of any increases in user workload associated with setting up or operating the feature and of the consequences of any errors associated with its use. In analyzing HSI flexibility, consideration should be given to the effects on other crew members who must view or use HSI components that have been modified by others. Flexible HSI features should not be provided if their use by one individual may have significant negative effects on the performance of other personnel who must also use the HSI component, such as when an HSI component is shared or when one person must monitor the performance of another (e.g. over-the-shoulder observation).

(6) *Separation of Interface Management Features and Plant Control Features* – Consideration should be given to designing interface management feature that utilize different cognitive resources than plant control features.

(7) *Compatibility with Existing Features* – If an HSI is being modified or a new HSI is being integrated into an existing control room, compatibility of interface management methods between the new and existing HSIs should be addressed.

B.2.4 Procedure Development

(1) To minimize demands on memory and search time, plant procedures should identify the proper displays or controls to use for particular tasks if the HSI provides multiple displays and controls that are similar and if confusion may exist regarding the proper one to use.

B.2.5 Training Program Development

(1) Necessary interface management skill should be identified and should be addressed in personnel training. It should also address failure modes of the computer-based system and personnel tasks that result from these failures.

(2) Since operators are required to concurrently perform multiple monitoring and control tasks, they should receive training in strategies for managing concurrent tasks, especially in high-workload situations. This training should explicitly address interface management aspects of performance, such as optimum strategies for allocating and switching viewports in multi-function displays.

(3) The development of training programs to teach interface management skills and strategies should take into account differences in levels of experience and individual differences with respect to the kind of task management strategies employed and their effectiveness.

B.2.6 Human Factors Validation

(1) Validation trials should be conducted to assess the effects of interface management tasks on the performance of primary (supervisory control) tasks to ensure that the both can be performed by operators.

(2) The number and placement of display devices in the HSI should be validated through performance-based trials to assess adequacy and effectiveness under operational considerations. These performance-based trials should take into account operator strategies for dedicating particular display devices to particular displays. These trials should also address the placement of display devices for tasks that require operators to integrate information across display devices and for tasks that require multiple personnel to share controls and displays. For example, the total number of display devices

needed by crew members may be reduced if some are shared among multiple operators. Alternatively, the total number of display devices may be increased if it is determined that additional display devices may be needed to support coordination of activities among personnel, as with the implementation of plant overview displays.

(3) Performance measures developed for validation trials should be sensitive to changes in work methods and performance objectives adopted by operators as the task load increases. Performance measures that are focused entirely on plant performance or operator outputs may not accurately assess the effects that interface management tasks have on personnel performance. As task load increases, there is a natural tendency for operators to adopt less effortful work methods, such as modifying the HSI to require less demanding interactions. There is also a tendency for operators to focus effort on the highest priority task objectives, such as safety, and disregard lower level objectives. Performance measures that do not attempt to capture and describe these changes may provide inaccurate assessments of operator workload. Test scenarios should be developed in conjunction with performance measures to ensure that the measures are appropriate for each scenario.

B.3 Review Guidelines for the Computer-Based Procedure System Design Process

B.3.1 HFE Program Management

(1) CBP design and evaluation should be performed with a multidisciplinary team.

(2) An implementation plan should be developed to deal with CBP design, maintenance, training, and evaluation.

(3) The CBP's design constraints or assumptions should be documented and their implications for safety should be evaluated to ensure they do not compromise the CBP system's goals.

(4) The CBP development program should be fully documented, including design goals and assumptions, use of operating experience, design analyses, establishment of system requirements, tests and evaluations, detailed description of the design, and verification and validation.

B.3.2 Operating Experience Review

(1) The CBP design should eliminate or minimize PBP problems where practical. Experience with paper procedures should be reviewed to take advantage of lessons learned in their operational use, maintenance, and configuration control as well as to help ensure that problems in implementing PBPs are resolved. Table B.3.1 is a partial list of identified PBP problems.

(2) Operating experience with CBP systems should be reviewed to take advantage of lessons learned in using the systems, as well as to ensure that any problems in implementing CBPs are dealt with.

(3) Human performance issues, such as visual fatigue, arising from the computerization of documents and manuals should be addressed.

Table B.1 Examples of deficiencies in paper-based procedures

Issue	Deficiency
Design Process	• Inadequate participation of operations and training personnel in developing procedures • Technically incorrect EOPs • Suitable under standard situations, but less support in unusual situations • Incomplete procedures • Inadequate consideration of the time required to complete procedural actions • Insufficient verification and validation (V&V) of procedures
Implementation	• Nonspecific entry and exit conditions for support procedures • Procedures are fixed and inflexible • Incorrect sequencing of action steps • Inadequate consistency across procedures • Inconsistencies in formatting and use of terminology • Incorrect identification of plant equipment • Inadequate provision for varying level of detail • Non-sequential presentation of information • Difficulties in navigating to related information • Inadequate management of multiple procedures • Unsatisfactory integration of procedure tasks and other tasks • Problems in labeling and headings • Notes and cautions in improper places • Lack of context-dependent highlighting and navigation • Requirements to use multiple procedures simultaneously and move between sections • Lack of flowcharts to guide procedure use • Inadequate support and reference material • Bulkiness • Physical handling of procedures near control panels • Separation from other information sources, such as SPDS • Inconsistency with other HSIs in terms of references to plant equipment
Training	• Operators poorly trained in using procedures
Maintenance	• Maintaining technical accuracy of procedures lacking

B.3.3 Functional Analysis

An overall concept should be developed of the operators' role in managing and supervising plant procedures.

B.3.4 Task Analysis

(1) The effect of the CBP on the tasks of individual members of the crew should be analyzed, considering any potential changes that may result from the combined use of CBPs and PBPs, and also the effect on communications.

(2) CBP tasks should be analyzed and used as an input to its design.

(3) Tasks associated with CBP failure and back-up should be identified to define the requirement for indicating malfunctions. The task of smoothly transitioning from CBPs to a back-up method (such as PBPs) also should be addressed.

B.3.5 Staffing

(1) The demands of operating and maintaining the CBP should be assessed for their implications for personnel skills and qualifications.

B.3.6 Human Reliability Analysis

(1) Any effects on performance caused by computerization of procedures should be analyzed for their implications for those human actions modeled in a PRA.

(2) The analysis should consider the effects on human reliability of loss of CBPs and transfer to PBPs.

B.3.7 Human-System Interface Design

(1) The HSI design should consider methods by which procedure elements are represented in the CBP and the extent to which usability principles for PBPs generalize to CBP systems.

(2) The procedure functions to be provided by the CBP system should be carefully analyzed to ensure that the system is consistent with the utilities' general approach to procedure-based operations, and that the operator's inputs and judgments are included, where appropriate.

(3) The following aspects of CBP design should be carefully evaluated to ensure that the use of procedures is not jeopardized and that task requirements are adequately supported:
   - Number of VDUs
   - Interface management and navigation functions
   - Flexibility of CBP display and operations

(4) The potential interactive effects between procedure use and the hardware and software used to implement them should be evaluated.

(5) The means by which CBPs can support crew cooperation, communication, and decision making should be evaluated.

(6) Operators should be involved in developing and evaluating prototypes to ensure that their final design is usable.

B.3.8 Procedure Development

B.3.8.1 Scope of Procedures

(1) The purpose and scope of the CBP system should be clearly defined.

B.3.8.2 Bases of Procedures

Procedure bases refer to the background information used to develop the CBPs. Procedures are critical management tools because they are among the more important means of guiding human interactions with the plant systems. The procedures must not only prescribe technically correct actions, but must also implement licensee's and the NRC's expectations for the conduct of operations. Consequently, their content should be consistent with the technical, regulatory, and management bases of plant operations, no matter what medium is used to present them.

(1) The technical bases for procedures should be documented. Where the documented bases for paper procedures are unchanged by computerization, the existing document may be used. This should include the sources of technical information, as well as the process by which the information was used to define the desired operator actions and supplemental information, such as cautions and warnings, figures, and tables.

(2) The regulatory bases for procedures should be specified, and the manner in which they were applied in developing the CBPs should be documented.

(3) The management bases for procedures should be documented.

(4) If the CBPs are to be implemented in an operating plant using PBPs, their impact on existing management bases should be evaluated.

(5) If the CBPs are developed for a generic plant design or for new designs, plans and methods should be specified for incorporating the licensee-specific management bases. Since the specific characteristics of the intended users and their work environments may not be known, the methods by which the CBPs can be tailored for them should be identified.

B.3.8.3 Technical Information

(1) The selection of parameters and indicators of plant state to be monitored at each procedure step should be reviewed.

(2) The means by which the CBPs make the following types of assessments should be completely documented and reviewed by a multidisciplinary team, including plant operators:

- Conditions for entering procedures
- Analysis of step logic

- Assessment of cautions and notes
- Performance of calculations
- Assessment of exit conditions from procedures
- Assessment of high-level procedural goals

(3) Procedures should be specifically tailored to the intended users, their physical work environment, and the organization in which the tasks are performed.

B.3.8.4 Maintenance of Procedures

(1) Methods should be specified for assuring that procedure revisions do not introduce technical inaccuracies, or inconsistencies in how the CBPs are presented.

(2) Provisions should be made for temporarily changing procedures. Administrative procedures for introducing and handling procedure changes should identify how to properly implement the changes in the CBP system. These changes should be clearly identified in the CBP's interface.

B.3.9 Training Program Development

(1) The training program should address the role of the operators to assure that they remain in control of the CBP system and independently supervise it.

(2) The knowledge, skills, and abilities that users will require to interact successfully with the CBP should be specified by the designers.

(3) The training requirements for using CBPs should be specified and incorporated into a training program that should cover both initial and ongoing training. Training should consider the design features, functions, and limitations of CBPs (such as the potential for incorrect assessments).

(4) The training program should inform operators about limited and complete failures of the CBP. Operators should be trained to determine when to override CBP evaluations and advice. They should be able to manage the transition to PBPs when CBPs are lost and move back to them when system function is restored.

(5) The training program should address the importance of teamwork and communication when the CBP is being used.

(6) For CBP systems used for EOPs only, the compatibility with day-to-day operations needs to be evaluated to ensure that the system can be easily understood and used.

(7) The means by which the CBP will be introduced and implemented in an operating plant should be specified.

B.3.10 Human Factors Verification and Validation

(1) A verification and validation (V&V) plan should be established.

(2) V&V of procedures should ensure that the CBPs are technically correct and usable. Three types of

design considerations must be addressed when evaluating their usability: (1) HFE design standards and guidelines for human-computer interaction, (2) HFE design guidelines for the format of text instructions and graphics used in presenting procedural information, and (3) the unique influence of site-specific characteristics and users. The acceptability of a CBP system cannot be determined without documentation that all three types of considerations were acceptably addressed.

(3) An independent review team should conduct V&V.

(4) CBP evaluations should use several crews and scenarios. They also should use operator-in-the-loop evaluations to ensure that the system's objectives are achieved and that any transitions between CBP and PBP are accomplished.

(5) Each CBP EOP procedure should be evaluated in the plant's simulator.

(6) Operators should be able to detect CBP errors and failures.

(7) The V&V should establish that crew performance is not degraded as compared with that reached using PBPs.

(8) The criteria for accepting the CBP should be specified.

GLOSSARY

GLOSSARY

Abbreviation – A shortened form of a word or phrase used for brevity.

Acknowledged alarm – An alarm is considered to be acknowledged when the operator has made some type of input to the alarm system (such as pressing a button) to indicate receipt of the alert or message provided by the alarm system. The act of acknowledging an alarm typically causes the attention-getting characteristics of its display to cease or decrease (e.g., the sound stops and the flashing display changes to a steady illumination).

Acknowledgment – Providing feedback to the sender that a message has been received.

Acronym – A word formed from the initial letter(s) of each of the successive or major parts of a compound term.

Action sequence – A set of operations that must be performed sequentially to carry out a control action.

Activated alarm – The condition in which a monitored parameter exceeds a specified limit (setpoint), the deviation is evaluated by the processing portion of the alarm system, and a message is conveyed to the operator via the display portion of the alarm system (e.g., annunciators).

Active window – The window in which user is currently interacting with the system. Typically, this means that an active window (a) is currently receiving input from the user, (b) has last received input from the user, or (c) has been readied for input through the user's explicit action. The user is generally said to be "working in" the active window (such as processing a document, controlling a system, entering data). (See also inactive and closed windows).

Additive color process – Presentation of color images by the simultaneous selective projection of red, green, and blue light on a screen.

Addressing messages – Preparing header information to specify the destination for transmitting data.

Advanced alarm system – A primarily digital alarm system employing alarm processing logic and advanced control (e.g., on-screen controls) and display (e.g., VDU) technology. (This is in contrast to conventional alarm systems, which are largely based on analog instrument and control technologies.)

Advanced control room (ACR) – A control room that is primarily based on digital technology. ACRs typically allow the operator to interact with the plant via computer-based interfaces, such as video display units. This is in contrast to "conventional" control rooms, which provide interaction via analog interfaces, such as gauges.

Adjustment controls – Controls used by personnel to correct or adjust the operation of equipment, such as to set an operating value. These controls may be external, such as controls mounted on maintenance panels, or internal, such as test and relay switches located on printed circuit boards.

Alarm – The term alarm is used in the broad sense, i.e., a plant parameter, component, system, or function that is currently in a state requiring the attention of plant personnel. For example, a monitored parameter exceeds a specified limit (setpoint), the deviation is evaluated by the processing portion of the alarm system, and a message is conveyed to the operator via the display portion of the alarm system.

Alarm availability – The display processing method by which the results of alarm processing are made available to the operating crew. This relates to which alarms are made available to the operator rather than how they are presented (which is referred to as alarm display). Three techniques are identified: filtering, suppression, and prioritization.

Alarm display – The method(s) by which alarm coding and messages are presented to plant personnel.

Alarm generation processing – A class of alarm processing which includes techniques that analyze the existing alarms and, then based upon this, generate alarm messages which (1) give the operator higher level or combined information, (2) notify the operator when "unexpected" alarms occur, or (3) notify the operator when "expected" alarms do not occur.

Alarm message – Information presented to the operator by the auditory, visual, and other display devices of the alarm system in response to an alarm condition.

Alarm processing techniques – The rules or algorithms that are used to analyze plant sensor data to determine their importance, validity, and relevance, and determine whether an alarm message should be presented to the operator.

Alarm signal processing – The process by which signals from plant sensors are automatically evaluated. This process, which includes signal validation and other techniques, determines whether an alarm condition exists.

Alarm system – An automated system consisting of processing and display hardware and software, which processes or analyzes signals from plant sensors and alerts the operator via visual and/or auditory displays when monitored parameters deviate from specified limits (setpoints) or predefined conditions.

Alphabetic – Pertaining to a character set that contains letters and other symbols, excluding numbers.

Alphanumeric – Pertaining to a character set that contains letters, digits, and usually other symbols, such as punctuation marks.

Alphanumeric code – A set of letters and/or numbers used to identify a group of data (e.g., in a table).

Alphanumeric keyboard – A keyboard used for typing letters or numbers into the computer.

Analytical redundancy – The calculation of expected parameter values using a model of system performance.

Annunciator – An indicator of the status of a plant parameter, component, system, or function that does not necessarily require the attention of plant personnel. When such attention is required, an alarm condition exists. The term annunciator is sometimes used to refer to the spatially dedicated display portion of an alarm system.

Applicant – An organization, such as a nuclear plant vendor or utility, that is applying to the U.S. Nuclear Regulatory Commission for design certification or plant licensing.

Arrow buttons – A pair of buttons used to change a value by increments each time they are pressed. Often, the button that produces an increase is marked with an upward arrow and the button that produces a decrease is marked with a downward arrow.

Audio – Pertaining to acoustic, mechanical, or electrical frequencies corresponding to normally audible sound waves.

Auditory – Pertaining to the sense of hearing.

Automatic mode – A mode in which processing proceeds without human intervention (as contrasted with interactive and manual modes).

Automatic, self-correcting features – Features that detect and automatically correct errors that users make when providing inputs. For example, a "Delete" command that is incorrectly entered as "DLE" may be automatically changed to its correct form, "DEL," and then executed.

Automatic test equipment – Test equipment that checks two of more signals in sequence without the intervention of a maintainer. The test usually stops when the first out-of-tolerance signal is detected.

Backlash – Failure of the output signal to track a control input as the movement of the control is started or stopped; in mechanical systems this is also referred to as 'play'.

Bar chart – A graphic figure in which numeric quantities are represented by the linear extent of parallel lines (or bars). The length of the line (or bar) is proportional to the numbers represented. Bar charts are useful for comparing separate entities or showing a variable sampled at intervals.

Bench mockup – An actual unit of equipment or replica used in training for checking or locating faults.

Binary – (1) Pertaining to a characteristic or property involving a selection, choice, or condition in which there are two possibilities. (2) Pertaining to the number representation system with two values.

Blank – Containing no data; a non-printing graphic character used to separate data; a space for the entry of data.

Buffer – A file or device that temporarily stores data.

Built-in test – An integral part of a unit of equipment that performs diagnostic tests. Built-in features may be as simple as a voltmeter, or as complex as an automatic checker.

Built-in test panel – A panel containing connections for external test devices so that internal components can be assessed.

Button – A type of hardware control device or a defined control region on the display screen which, when selected, causes some action.

Cancel – A capability that regenerates (or re-initializes) the current display without processing or retaining any changes made by the user.

Capture error – An error of execution (slip) that occurs when an infrequently performed action requires a sequence of operations, some of which are the same as or similar to those of a frequently performed action. In attempting the infrequent action, the more frequent action is performed instead. For example, an operator intends to perform task 1, composed of operations A, B, C, and D, but instead executes the more frequently performed task 2, composed of operations A, B, C, and E.

Category – A grouping of data values along a dimension defined for operational purposes.

Cathode ray tube – An electronic vacuum tube, such as a television picture tube, that can be used to display textual information and/or graphics. Typically abbreviated "CRT."

Caution signal – A signal that alerts the operator to an impending condition requiring attention, but not necessarily immediate action (See warning signal).

Character set – A set of unique representations called characters; e.g., the 26 letters of the English alphabet, and the 128 characters of the ASCII alphabet.

Character width – The horizontal distance between a character's origin (a point on the base line used as a reference location) and the next character's origin.

Character – A letter, digit, or other symbol that is used as part of the organization, control, or representation of data.

CIE distance – Difference between colors expressed as a distance in the Uniform Color Space established by the Commission Internationale de l'Eclairage (International Commission on Illumination); the three-dimensional color space is based on the response of the human eye to light of different wavelengths.

Circuit breakers – Devices that protect equipment from excessive electrical current.

Circuit packaging – A method for organizing equipment into modules in which all parts of a single circuit or logically related group of parts, and only that circuit or group, are placed in a separate module.

Clear – A system function that removes the current selection but does not put it into the temporary buffer. A copy is retained, accessible immediately by the Undo command.

Cleared alarm – An alarmed parameter that has returned from an alarmed state to its normal range. Some alarm systems generate alarm messages when the parameter enters the normal range. The operator may be required to reset the alarm in order to "clear" it.

Click – An input device "button-down" action (e.g., depressing and releasing the button on a mouse or trackball) for the actual entry (enabling, activation) at a designated position. This action is distinct from cursor positioning. Also, the auditory feedback from keyboard entry.

Closed window – A window which is not visible and which requires some action by the user to gain perceptual and functional access. For example, a user may select and open an icon that represents a window or, in contrast, might input a command to open a specific window. (See also active and inactive windows).

Coding – Use of a system of symbols, shapes, colors or other variable sensory stimuli to represent specific information. Coding may be used (a) for highlighting (i.e., to attract a user's attention to part of a display), (b) as a perceptual indicator of a data group, or (c) to symbolize a state or attribute of an object (e.g., to show a temperature level or for warning purposes).

Coherence mapping – A map between the features in the representation and the physical and cognitive characteristics of the operator (how comprehensible the representation is to the operator).

Collating test equipment – Test equipment that presents the combined results of two or more checks. For example, a light might come on only if a number of different signals are all within tolerance.

Color – The aspect of objects or light sources that may be described in terms of hue, lightness (or brightness), and saturation.

Column – A vertical arrangement of items.

Command – (1) The act of instructing the computer or system to perform an action. (2) An entry provided by a user, which instructs the computer system to perform an action.

Command language – A type of dialogue in which a user composes entries, possibly with minimal prompting by the computer.

Communication systems – Systems that support communications, such as between personnel in the main control room, between the main control room and local sites within the plant, and across sites within the plant. The broad variety of communication media may be generally categorized as speech-based and computer-based systems.

Component – The meaning of the word component depends on its context. In context of the entire plant, it is an individual piece of equipment such as a pump, valve, or vessel; usually part of a plant system. In a human-system interface context, a component is one part of a larger unit, such as one meter in a control board. In a maintenance context, a component is a subdivision of a unit of equipment that can be treated as an object by the maintainer, but which can be further broken down into parts. A mounting board together with its mounted parts is an example of a component.

Component packaging – A method for organizing equipment into modules in which similar parts or components are located together; for example, all the fuses or all the relays might be grouped together.

Computer-based procedure systems – Systems that present plant procedures in computer-based rather than paper-based formats.

Computerized operator support systems – Systems that use computer technology to support operators or maintenance personnel in situation assessment and response planning. They can monitor status and provide recommendations or warnings.

Concatenation – (1) The process of linking data together. (2) A set of logically related items which are treated as a whole.

Configural display – A display in which information dimensions are uniquely represented, but where new emergent properties are created from interactions between the dimensions. Configural display representations often use simple graphic forms, such as a polygon.

Confirmation step – A step in a transaction sequence that requires the user to respond to a warning or advisory message. For example, the user may respond to the question, "Are you sure you want to do this?" by pressing "Yes" or "No."

Context definition – Displaying an indication of previous user actions or computer processing that will affect the results of current actions, to help a user predict how the system will respond.

Continuous – Marked by uninterrupted extension in space, time, or sequence; see also discrete.

Continuous-adjustment interfaces – Computer-based formats that have continuous ranges usually accessed with some type of slewing motion requiring a gross movement followed by a fine adjustment. Their operation is similar to that of physical control devices that provide continuous adjustment, such as rotary dials or slider switches.

Continuous on-line self-test – A testing capability that continuously monitors overall system availability by rapidly identifying hardware failures.

Contrast – Diversity of adjacent parts in color and intensity.

Contrast ratio – The measured luminance at one point divided by the measured luminance at another, equal to Lt/Lb, (Ls-Lb)/Lb, or (1+Ls)/Lb, where

Lt = total luminance, or luminance of the image in the presence of background;

Ls = luminance of the symbol without background (luminance emitted by CRT in the case of CRT displays);

Lb = luminance of background.

Contrast ratio, rather than contrast, is often specified by display manufacturers because it is numerically larger (by one) than contrast.

Control – A mechanism used to regulate, and/or guide the operation of a component, equipment, subsystem, or system.

Control entry – User input for sequence control, such as function key activation, menu selection, command entry.

Controlling transmission – The process of ensuring that transmitted data are saved until they can be delivered or returned to the sender.

Conventional alarm system – A primarily analog-based alarm system employing little or no alarm display processing logic and using conventional control (e.g., pushbutton) and display (e.g., annunciator tiles) technology. (This is in contrast to advanced alarm systems).

Copy – A system function that puts a duplicate of the selection into the temporary editing buffer without disrupting the original data.

Correspondence mapping – A map between the properties and characteristics of the system to be represented and the features in the representation (how well the display communicates meaningful information about the plant to operators).

Cross-coupling – A defect of a multiple-axis positioning system whereby an adjustment of one axis causes an undesired change in another.

CRT – A cathode ray tube, i.e., an electronic vacuum tube, such as a television picture tube that can be used to display textual information and/or graphics.

Cursor – A display graphic that is used to indicate the position of the user's operation on the display (such as an arrow or flashing bar).

Cut – A system function that removes the current selection from the screen and puts it into the temporary editing buffer, replacing the buffer's previous contents. Cut may be used to either delete or to move a selection.

Darkboard – An alarm display in which the medium is dark (not illuminated) if all monitored plant parameters are in the normal range. Thus, an illuminated alarm-display device indicates a deviation from normal plant conditions. This is in contrast to many conventional alarm systems, which employ display devices to indicate both normal and abnormal changes in the plant's condition.

Data – The raw materials from which a user extracts information. (A user can be a human or another component of the system, such as an expert system.) Data may include numbers, words, and/or pictures.

Data display – Output of data from a computer to its users. Generally, this phrase denotes visual output, but it may be qualified to indicate a different modality, such as an "auditory display".

Data entry – User input of data for storage in, and/or processing by, the system.

Data item – A set of characters of fixed or variable length that forms a single unit of data. Sometimes a data item might contain only a single character. Data items may be entered by a user or may be displayed by the system.

Data protection – Functional capabilities that guard against unauthorized access to and tampering with data, and data loss due to user errors or computer failure.

Data transmission – Computer-mediated communication among system users, and also with other systems.

Data validation – A process by which data are checked for accuracy by comparing values from redundant sources (e.g., automated comparison of data from redundant sensors).

Database – A structured set of data, manipulated using a data management system.

De-emphasis – The inverse of pre-emphasis, employed for the purposes of restoring original vowel-consonant amplitude relationships in pre-emphasis speech; primarily useful in maintaining the "natural" sound quality.

Decibel (dBA) – Sound level in decibels, measured using A-weighting. The use of A-weighting causes the frequency response of the sound level meter to mimic that of the human ear, i.e., response is maximum at about 2kHz, less at very low or very high frequencies. A-weighted measurements correlate well with measures of speech interference and judgments of loudness.

Default – A 'typical' or 'safe' value or setting that is used if no alternative is specified; the value assumed unless specifically overridden. Defaults represent predetermined, frequently used, values for data or control entries intended to reduce entry actions required from the user.

Demarcation – The technique of enclosing functional or selected groups of controls and displays with a contrasting line to emphasize their relatedness.

Density – (Screen Density) The amount of the display screen that contains information; often expressed as a percentage of the total area.

Description error – An error of execution (slip) that involves performing the wrong set of well-practiced actions for the situation. Description errors occur when the information that activates or triggers the action is either ambiguous or undetected.

Diagram – A special form of a picture in which details are only shown if they are necessary to perform a task. For example, an electrical wiring diagram for a facility would show wiring but not necessarily furniture or plumbing.

Dialogue – A structured series of interchanges between a user and a computer. A dialogue can be initiated by a computer (e.g., question and answer) or by a user (e.g., command language).

Digitizing tablet – (Graphics Tablet) Device used to convert an image into digital code drawing or tracing with a pen-like or puck-like instrument. The instrument is moved across the tablet and a series of X-Y coordinates is generated.

Dimension – A scale or categorization along which data may vary, taking different values at different times.

Direct manipulation – The user manipulates symbols in the display by directly interacting with the symbol. The direct manipulation is generally performed by using a display structure, such as a pointer, and a cursor control device, such as a mouse.

Discrete – Consisting of distinct or unconnected elements; see also continuous.

Discrete-adjustment interfaces – Computer-based formats with individual settings that usually can be accessed using fairly gross movements. Their operation is similar to discrete-adjustment controls, such as push buttons.

Display – A specific integrated, organized set of information. A display can be an integration of several display formats (such as a system mimic which includes bar charts, trend graphs, and data fields).

Display control – Procedures by which a user can specify what and/or how data are shown.

Display device – The hardware used to present the display to users. Examples include video display units and speakers for system messages.

Display element – A basic component used to make up display formats, such as abbreviations, labels, icons, symbols, coding, and highlighting.

Display format – The general class of information presentation. Examples of general classes are continuous text (such as a procedure display), mimics and piping and instrumentation diagram (P&ID) displays, trend graphs, and flowcharts.

Display network – A group of display pages within an information system and their organizational structure.

Display page – A defined set of information that is intended to be displayed as a single unit. Typical nuclear power plant display pages may combine several different formats on a single VDU screen, such as putting bar charts and digital displays in a graphic P&ID format. Display pages typically have a label and designation within the computer system so they can be assessed by operators as a single "display."

Display selection – Refers to the specification of data outputs, either by a user or automatically.

Display structure – Functional or information-presenting aspects of a display that are consistent in appearance and use across applications, e.g., providing reference to the user's location in an information system and display of control options available.

Display tailoring – Designing displays to meet the specific task needs of a user, rather than providing a general display that can be used for many purposes.

Dot matrix – A rectangular array of dots or lights from which characters are built.

Drag – The act of moving a follower (such as a cursor) or selected icon through parts of a display (typically using a direct manipulation device such as a mouse).

Dynamic – Marked by continuous activity or change.

Dynamic display – Contains screen structures that change one or more feature(s), e.g., numerical value, color, shape, or spatial location, in real time or near real-time.

Emergent feature – A high-level, global perceptual feature produced by the interactions among individual parts or graphical elements of a display (e.g., lines, contours, and shapes).

Enter – An explicit user action that affects computer processing of user entries. For example, after typing a series of numbers, a user might press an ENTER key that will add them to a database, subject to data validation.

Enter key – Key used to indicate completion of data entry for current field or record.

Entry – (1) The act of inputting information to the system. (2) Something that has been entered, such as data or a command.

Equipment packaging – The way that modules, components, and parts are arranged within an enclosure.

Excerpt file – A file which allows the user to move data from one location to another; it differs from a temporary editing buffer in that the excerpt file can be saved. Data can be appended to or interleaved into the existing contents of the excerpt file.

Existing alarm – An acknowledged alarm that has not yet cleared.

Extinguished alarm (also called reset alarm) – An alarm that has returned to an inactive state (e.g., the plant parameter has returned to the normal range and all associated alarm messages have been acknowledged by the operator).

Fault-tolerant digital control systems – Digital systems with redundant processors that use fault-diagnostic routines that can detect single faults and isolate the failed equipment. This ensures that the equipment that is still operational takes over the control function.

Feedback – System or component response (e.g., visual or aural) that indicates the extent to which the user's desired effect was accomplished. Feedback can be either intrinsic or extrinsic. Intrinsic feedback is that which the individual senses directly from the operation of the control devices (e.g., clicks, resistance, control displacement). Extrinsic feedback is that which is sensed from an external source that indicates the consequences of the control action (e.g., indicator lights, display changes, aural tones).

Field – An area of the display screen reserved for the display of data or for user entry of a data item. In a database, a specified area used for a particular category of data, for example, equipment operational status.

Field label – A displayed word or phrase that identifies the data display or entry field.

File – A collection of data which is treated as a single unit, e.g., such as that stored in the computer.

Filtering – An alarm display processing technique which may eliminate alarm messages that are irrelevant, less important, or otherwise unnecessary. These alarm messages are not available to the operators. (This is in contrast to suppression, which does not make the alarm messages immediately available but does allow the operator to retrieve them.)

First-out alarm – An alarm message that indicates the initial change in parameter responsible for reactor and/or turbine trips.

Fixed form – Pertaining to a mode of input in which the user is presented with a set of blanks to be filled in.

Fixed format – An unchanging description of specification of information content in a particular area.

Fixed function key – A key having a function that cannot be changed by the user or system and that remains constant between applications.

Flowchart – A diagram that illustrates sequential relations among elements or events. Flowcharts are often shown as boxes connected by arrows.

Follower – The on-screen symbol (such as a cursor and arrow pointer) that responds to the movement of computer input devices (such as a cursor key, mouse, trackball, and light pen).

Form – A dialogue technique that presents category labels and requires the user to fill in the blanks. A formatted output to the user with blank spaces for inserting required or requested information.

Format – The arrangement of data.

Formatting – The process or act of arranging data.

Frequency modulation – Sinusoidal variation of the frequency of a tone around a center frequency.

Frequency – Rate of signal oscillation in cycles per second (Hz or Hertz).

Function – (1) A software supported capability provided to a user to aid in performing a task. (2) A process or activity that is required to achieve a desired goal; see, e.g., safety function.

Function allocation – The process of assigning responsibility for function accomplishment to human or machine resources, or to a combination of human and machine resources.

Function analysis – The examination of system goals to determine what functions are needed to achieve them.

Function areas – Specific screen or panel locations that are reserved for specific purposes.

Function key – A key whose activation will affect a control entry. Detection of the signal usually causes the system to perform some predefined function for the user.

Fuses – Devices that protect equipment from changes in electrical current.

Gloss – The extent to which light incident on a surface at angle x is reflected from that surface at angle -x (minus x) relative to a line perpendicular to the surface. A mirror has maximum gloss.

Gloss instrument – A device that measures reflected light as a function of illumination and angle of view. The angle for which gloss is measured is typically 60 degrees.

Go/no-go test equipment – Test equipment that provides one of two alternative answers to any question. For example, it may give a qualitative assessment of the condition of equipment by indicating whether a given signal is in (go) or out (no-go) of tolerance.

Graph – A display that represents the variation of a variable in comparison with that of one or more other variables.

Graphic element – A component part of a graphic display, such as a line, a circle, or a scale.

Graphic interaction – A dialogue in which the user selects displayed control elements by pointing or by other direct manipulation.

Graphical display – A display that provides a pictorial representation of an object or a set of data. Graphical displays include line, solid object, and perspective drawings; bar, pie, and line charts and graphs; scatterplots; displayed meters; flowcharts and schematic diagrams.

Graphics – Data specially formatted to show spatial, temporal, or other relations among data sets.

Graphics tablet – (Digitizing Tablet) Device used to convert an image into digital code by drawing or tracing with a pen-like or puck-like instrument. The instrument is moved across the tablet, generating a series of X-Y coordinates.

Grid – A network of uniformly spaced horizontal and vertical lines for locating points by means of coordinates.

Group – A set of items.

Grouping – (1) Locating alarm messages that are related to a common function or system in one area of a display. (2) The act or process of combining in groups.

Hardcopy – A printed copy of computer output in a readable form; for example, printed process displays an alarm listing.

Help – Information provided to guide the user in operating the system or displayed at the user's request for on-line guidance.

Hierarchical branching – A method of structuring menu items that are hierarchically related which allows selection among alternatives without requiring the opening and closing of a series of menus; the entire hierarchy is contained in one menu.

Hierarchy – The designated order or rank of items; a series of items that are classified by rank or order.

Highlight – A means of directing the user's attention to a feature of the display. Highlighting methods include image reversal (reverse video), brightness/boldness contrast, color, underlining, blinking, flashing arrows, and changes in font. Emphasizing displayed data or format features in some way, e.g., by using underlining, bold, or inverse video.

Histogram – A type of bar chart used to depict the frequency distribution for a continuous variable. The variable may be grouped into classes.

Human engineering discrepancy (HED) – A departure from some benchmark of system design suitability for the roles and capabilities of the human operator. This may include a deviation from a standard or convention of human engineering practice, an operator preference or need, or an instrument/equipment characteristic that is implicitly or explicitly required for an operator's task but is not provided to the operator.

Human factors – A body of scientific facts about human characteristics. The term covers all biomedical, psychological, and psychosocial considerations; it includes, but is not limited to, principles and applications in the areas of human factors engineering, personnel selection, training, job performance aids, and human performance evaluation (see human factors engineering).

Human factors engineering (HFE) – The application of knowledge about human capabilities and limitations to plant, system, and equipment design. HFE ensures that the plant, system, or equipment design, human tasks, and work environment are compatible with the sensory, perceptual, cognitive, and physical attributes of the personnel who operate, maintain, and support it (see human factors).

Human-system interface (HSI) – The human-system interface (HSI) is that part of the system through which personnel interact to perform their functions and tasks. In this document, "system" refers to a nuclear power plant. Major HSIs include alarms, information displays, controls, and procedures. Use of HSIs can be influenced directly by factors such as, (1) the organization of HSIs into workstations (e.g., consoles and panels); (2) the arrangement of workstations and supporting equipment into facilities such as a main control room, remote shutdown station, local control station, technical support center, and emergency operations facility; and (3) the environmental conditions in which the HSIs are used, including temperature, humidity, ventilation, illumination, and noise. HSI use can also be affected indirectly by other aspects of plant design and operation such as crew training, shift schedules, work practices, and management and organizational factors.

Icon – Pictorial, pictographic, or other nonverbal representation of objects or actions.

Identification – A code number or code name that uniquely identifies a record, block, tile, or other unit of information.

Identifier – A symbol whose purpose is to identify, indicate or name a body of data.

Inactive window – Windows perceptually and functionally available to the user (the user may be able to see and obtain information from them) but not immediately available in the sense that the user must activate an inactive window before working in it. (See also active and closed windows).

Index – To prepare an ordered reference list. An ordered reference list of the contents of a file or document, together with keys or reference notations to identify or locate those contents.

Information – Organized data that users need to successfully perform their tasks. Information can include (a) a representation of facts, concepts, or instructions in a formalized manner suitable for communication, interpretation, or processing by humans or automatic means; and (b) any representations, such as characters or analog quantities, to which meaning is, or might be, assigned.

Information system – Those aspects of the human-system interface that provide information on the plant's processes and systems to the operator.

Initiating transmission – The process of actually sending a command, message, or data file. Transmission can either be initiated by the computer, or by a system user.

Input – (1) Information entered into a system for processing. (2) The process of entering information. (3) Pertaining to the devices that enter information.

Input/output – (1) Pertaining to either input or output, or both. (2) A general term for the equipment used to communicate with a computer, commonly called I/O. (3) The data involved in such communication. (4) The media carrying the data for input/output.

Insert mode – A data entry mode that allows the user to insert new information within existing information. If the cursor is placed within existing information, old characters are moved forward to allow insertion of the new characters.

Instrument cabinets and racks – Enclosures that hold modules, components, and parts. They typically have access doors or removable panels for access to their contents.

Integral display – A display that depicts the integration of information in such a way that the individual parameters used to generate the display are not explicitly represented in it.

Interactive graphics – A mode of input in which the user is graphically (e.g., by plot, histogram) presented data from which to choose. Once an input has been so selected, the user may interact with the system to correct or refine the data.

Interactive mode – A processing mode in which the user is assumed to be available to the system for inputs or decision making. The user submits one input at a time to the system and each input is processed by the system as soon as possible (as contrasted with manual and automatic modes).

Interface – (1) The point at which a user and the system interact. (2) A shared boundary, e.g., a hardware component to link two devices or a portion of storage or registers accessed by two or more computer programs.

Interrupt – Stopping an ongoing transaction to redirect the course of the processing. Examples of interrupt options are BACKUP, CANCEL, RESTART.

Input field – The area in a display that is used to enter input. For example, a soft control may have an area in which operators can enter numerical data to adjust control setpoints or commands to execute actions.

Interface management – Actions performed by the operator to control the human-system interface rather than the plant, including finding and retrieving displays and adjusting display windows. Operators typically navigate through displays and retrieve needed controls and displays.

Interlock – A feature that requires operator actions to proceed in a specific sequence. For example, action B must be performed after action A, and action C after action B.

Joystick – A stick-type control device that can provide continuous cursor control in any direction on a display screen.

Justification – The act of adjusting, arranging, or shifting digits to the left, right, or center to fit a prescribed pattern.

Keystroke – The act of striking a key.

Keystroke command – A single or limited number of keystrokes that define a command. The keystrokes are often initiated by simultaneously pressing a key that signals a keystroke command and the first letter of a one-word command. Another version of the keystroke command is the function key.

Keyword – A word exemplifying the meaning or value of the data: (a) one of the significant, informative words in a title or document that describes the content of that document; (b) a symbol that identifies a parameter; or (c) a part of a command operand that consists of a specific character string.

Label – Descriptor that is distinguishable from, and helps to identify, displayed screen structures or components.

Labeling and marking – The use of labels and demarcations to identify units of equipment, modules, components, and parts.

Large-screen display – A large display that can be viewed from multiple workstations and locations in a control room. It typically contains important information that should be commonly available to control room crew members.

Layered windows – Layered windows (in contrast to tiled windows) refer to the on-screen positioning of multiple windows so that windows can overlap and may obscure the contents of the covered windows

Layout – The physical arrangement of the parts and components that make up a module or a unit of equipment.

Left justified – (1) The left-hand digit or character (or its sign) occupies the left-hand position of the space allotted for displaying it. (2) Alignment of text along the left margin, leaving the ends of the lines 'ragged' on the right side.

Legend – (1) The textual content of a continuously present, spatially dedicated alarm display. (2) An explanatory list of symbols or highlighting used on a graph, chart, diagram, or map.

Legibility – The quality of a display that allows groups of characters and symbols to be easily discriminated and recognized.

Level of abstraction – A hierarchy consisting of levels increasing in abstraction

- Physical form – the appearance and spatial location of the components
- Physical function – the characteristics of the components and their interconnections
- Generalized function – the basic functions a system was designed to achieve
- Abstract function – the causal structure of the process in terms of mass, energy, information or value flows
- Functional purpose – the purpose for which the system was designed; the functional characteristics of the plant as opposed to physical characteristics.

Light pen – A pencil- or pen-like control device that interacts with the computer system through the display device screen either by emitting or sensing light.

Local control station (LCS) – An operator interface related to process control that is not located in the main control room. This includes multifunction panels, as well as single-function LCSs, such as controls (e.g., valves, switches, and breakers) and displays (e.g., meters) that are operated or consulted during normal, abnormal, or emergency operations.

Location – A position or site occupied or available for occupancy.

Lockin – A feature that keeps an ongoing operation active by preventing personnel actions from terminating it prematurely.

Lockout – A feature that prevents personnel from providing input that may have negative effects. Statically defined lockouts may restrict operators' inputs to a specific, predefined range or set of values. Context-sensitive lockouts may restrict input values based on the current situation.

Logical flow packaging – A method for organizing equipment into modules in which circuits, parts, and components are packaged and arranged in correspondence with their functional relationships.

Loss-of-activation error – An intended action is not carried out due to a failure of memory (i.e., the intention has partially or completely decayed from memory). A special case of loss-of-activation errors involves forgetting part of an intended act while remembering the rest (e.g., retrieving a display while not being able to remember why it is needed).

Macro-command – A group of a series of commands redefined as a single command.

Main menu – A top level menu displayed upon entry into the system.

Maintainability – The design of equipment to support effective, efficient maintenance activities.

Maintenance – A process with the objective of preserving the reliability and safety of plant structures, systems, and components or restoring that reliability when it is degraded.

Manual mode – A processing mode in which the user is assumed to provide all inputs (as contrasted with interactive and automatic modes).

Matte – A surface that scatters incident light nearly equally in all directions; a surface that lacks gloss.

May – The word 'may' is used to denote permission and applies to a characteristic that is acceptable but not necessarily recommended (e.g., an equally acceptable alternative may exist); see also 'should'.

Medium – The material, or configuration thereof, on which data are recorded, for example, paper tape, cards, magnetic tape.

Menu – A type of dialogue in which a user selects one item out of a list of displayed alternatives. Selection may be made by actions such as pointing and clicking and by depressing an adjacent function key.

Menu bar – A specialized function area that displays categories of alternatives of user responses.

Menu selection – A type of dialogue in which a user selects one item out of a list of displayed alternatives, whether the selection is by pointing, by entry of an associated option code, or by activating an adjacent function key.

Message – (1) Alarm information displayed in text. (2) Data that are transmitted from another user or from the system.

Message area – A specialized function area for communication from another user or from the system.

Mimic – A display format combining graphics and alphanumerics used to integrate system components into functionally oriented diagrams that reflect the components' relationships.

Mirror-imaging – Symmetrical arrangement of sets of items about a axis such that relationships among thing within one set are reversed relative to those in the other set.

Misordered components of an action sequence – A human error involving skipped, reversed, or repeated steps.

Mistake – An error in intention formation, such as forming one that is not appropriate to the situation. Mistakes are related to incorrectly assessing the situation or inadequately planning a response.

Mockup – A static representation of a human-system interface (See simulator and prototype).

Mode – A state of operation in which the system operates in specific, unique ways or has specific, unique characteristics.

Mode editor – A text editing system in which the interpretation of the same user input varies depending whether the system is in entry mode or edit mode. Specifically, in a mode text editor the user must enter special commands to cause subsequent inputs to be entered either as text or as editing commands.

Mode error – Performing an operation that is appropriate for one mode when the device is in another mode. Mode errors occur when the user believes the device is in one mode when it is in another one.

Modeless editor – A text editing system in which the interpretation of the same user input does not vary; ordinary characters are entered as text, and commands are invoked using special keys.

Modularization – The separation of equipment into physically and functionally distinct units that can be easily removed and replaced.

Module – An assemblage of two or more interconnected parts or components that comprise a single physical entry, such as a printed circuit board, with a specific, singular function.

Monitor – The physical device housing the electronics, display, and display controls for an interactive computer system (See also video display unit).

Mounting – The positioning and attachment of parts, components, and modules.

Mouse – A control device whose movements across a flat surface are converted into analogous movements of the cursor across the screen.

Multitasking – The parallel performance of two or more tasks.

N-key rollover – A feature of a keyboard input system that stores keystrokes and generates the corresponding characters in the correct sequence despite more than one key being depressed at the same time (as in very rapid typing).

Natural language – A type of dialogue in which users compose control entries in a restricted subset of their natural language, e.g., English.

Non-disruptive – An action that does not interfere with the ongoing activities of the system or user.

Nuisance alarm processing – A class of alarm display processing which includes techniques that essentially eliminate alarm messages having no operational significance to current plant conditions. For example, mode dependent processing eliminates alarms that are irrelevant to the current mode of the plant, e.g., a low temperature or pressure signal that is an alarm condition in normal operation mode but is expected and normal during startup or cold shutdown.

Numeric – Pertaining to numerals or to representation by means of numerals.

Object display – A type of integral display that uses a geometric object to represent parameter values graphically, but where the individual information dimensions or data contributing to the object are not displayed.

Objects – Distinct information whose representation can be displayed and/or manipulated as a single entity. Objects are normally represented by graphic icons and/or names.

On-line maintenance – Maintenance performed while the plant is at power.

Open window – Windows that are both perceptually and functionally available to the user. Two types of open windows exist: active and inactive. (See also window)

Open/closed – When a window is opened it appears on the screen. Windows may be closed (removed from the screen) and reopened.

Operand – That which is operated upon. Information entered with a request to define the data in which the processor is to operate and control the execution of the processor.

Operating experience review – A review of relevant history from the plant's on-going collection, analysis, and documentation of operating experiences.

Operation – (1) A defined action, namely, the act of obtaining a result from one or more operands in accordance with a rule that completely specifies the result for any permissible combination of operands. (2) The set of such acts specified by such a rule, or the rule by itself.

Optical reader – A device that reads handwritten or machine printed symbols into a computing system.

Output – The data that are the product of an information handling operation or series of operations; the data emitted from a storage device; the data being transferred from primary storage (central processing unit) to secondary storage (tape, floppy disk); electrical pulses; reports produced by a printer or typewriter unit; a general term for output media, such as cards and tape. Contrasts with Input.

Packaging – The grouping of functions, components, and parts into units or modules.

Page – (1) The data appearing at one time on a single display screen. (2) A fixed-length block of data, especially that which fits into a printed record or screen. (3) To summon a particular page or the next logical page.

Paging – A method of viewing and moving through data in which a user conceives data as being grouped into display-sized pages and moves through it by discrete steps. Also, to summon by calling out by name.

Panel – The front face of an assembly, normally used for mounting controls and displays.

Parallax – The apparent change in the relative position of objects at different distances from the observer as the observer's position changes.

Parameter – (1) A power-conversion process variable or quantity that can assume any of a given set of physically feasible values. Plant parameters are typically measures of the performance of systems and processes of the plant, e.g., the parameter 'T-hot' is a measure of the temperature of reactor coolant that has passed through the reactor core. (2) A variable that is measured.

Part – An object that cannot normally be broken down further without destroying its designated use. Fuses, transistors, resistors, and capacitors are examples.

Paste – A system function that puts the contents of the temporary editing buffer (a selection previously cut or copied) at the insertion point of the current interactive window. The buffer contents are not altered by this operation.

Peak-clipping – A technique for controlling amplitude relationships in speech by limiting the instantaneous peak-amplitudes to improve its intelligibility, usually followed by amplification of the signal to increase the amplitude of the clipped peaks to their original level, with a proportional increase of the weaker speech sounds.

Performance-based test – Tests that involve the measurement of behavior of personnel, the human-system interface, or aspects of the plant to address design issues and design acceptability.

Personal safety – Relates to the prevention of individual accidents and injuries of the type regulated by the Occupational Safety and Health Administration.

Physically interchangeable units – Units of equipment that can fit into the same mounting position or fixture.

Pictographic – Pertaining to a picture-like representation of an object.

Pie charts – A circle divided into sections (as pieces of a pie) to represent graphically the relative proportions of different parts of a whole. A circular chart cut by radii into segments illustrating magnitudes or frequencies.

Plant – The operating unit of a nuclear power station including the nuclear steam-supply system, the turbine, electrical generator, and all associated systems and components. In the case of a multi-unit plant, the term plant refers to all systems and processes associated with the unit's ability to produce electrical power, even though some systems or portions of systems may be shared with the other units.

Plant variable – A variable that represents the status of a plant system or process. For example, the variable reactor coolant system pressure represents the pressure inside the piping of the reactor coolant system. (See variable.)

Pointing interface – A computer-based user interface operated via cursor or touch screen.

Pop-up menu – A menu whose items are normally "hidden" from the user's view until they are activated or brought into full view by a complete selection action. Pop-up menus remain visible until the user takes another action to hide the menu or make a selection.

Position – In a string, each location that may be occupied by a character or binary digit, and may be identified by a serial number.

Position designation – User selection and entry of a position on a display, or of a displayed item. (See also cursor).

Pre-emphasis – Systematic distortion of the speech spectrum to improve intelligibility of the sound by attenuating the low-frequency components of vowels (relatively unimportant for intelligibility) and proportionately increasing the amplitude of high-frequency vowel components and consonants (highly important for intelligible speech transmission).

Precision – The degree of discrimination with which a quantity is stated. For example, a three-digit numeral discriminates among 1000 possibilities.

Preparing messages – Includes specification of contents, format, and header information.

Primary tasks – Those tasks performed by the operator to supervise the plant; i.e., monitoring, detection, situation assessment, response planning, and response implementation.

Print queue – An area of computer memory that temporarily stores a file to be printed so that the user can continue interacting with the system while the file prints.

Printed circuit board – A module organization in which parts are mounted on an integrated circuit board.

Printer – A device that writes output data from a system on paper or other media.

Prioritization – A class of alarm-display processing that presents alarm messages to the operator according to an evaluation of importance, often using 2 to 4 categories of priority. The intent of this approach is to help the operators focus attention on the most important alarm conditions when there are multiple alarm conditions.

Processing – The execution of a systematic sequence of operations.

Programmable function keys – User programmable keys whose function may vary between applications or between users within an application.

Prompting – The process or act of assisting by suggestion.

Prototype – A dynamic representation of a human-system interface that is not linked to a process model or simulator. A model of an interface that includes the functions and capabilities expected in the final system, though not in a finished form. (See simulator and mockup.)

Pull-down menu – A menu whose items are normally hidden from the users view and accessed by the user holding the selection button down over the desired menu-bar label.

Query language – A type of dialogue in which users compose questions using a special-purpose language to retrieve information.

Question and answer – A type of dialogue in which a computer displays questions, one at a time, for a user to answer.

Queue – A waiting line or list formed by items in a system waiting for service; for example, tasks to be performed or messages to be transmitted in message switching system.

Record – A group of related data fields that are operated on as a single entity in a database.

Redundant alarm processing – A class of alarm-display processing which includes techniques that evaluate active alarm conditions to identify those that are true/valid but are redundant with other active alarm conditions. This processing filters, suppresses, or reduces the priority of alarm messages that have been determined to be of less importance because they provide information that is redundant with other existing alarm conditions and theoretically provide no new/unique information to the operator. For example, in causal-relationship processing, alarm messages associated with "causes" are displayed prominently, while alarm messages associated with "consequences" are eliminated or lowered in priority.

Reflash – A method of alarm presentation that can be implemented any time an alarm condition is based on input from more than one plant parameter. Reflash causes an alarm display to re-enter the new alarm state when an associated plant parameter reaches its setpoint. The alarm display cannot return to normal until all related parameters return to their normal ranges.

Reflectance – The ratio of reflected light to incident light.

Rejection level – The minimum level of certainty (represented by a number) required by a speech recognition system for a spoken command to be executed.

Remote – Acting on or controlling indirectly from a distance.

Request – A user input specifying the operation(s) to be performed.

Response time – The time between the submission of an item of work to a computing system and the return of results.

Retrace – A capability that returns a user to the last previous display in a defined transaction sequence (also called "backup").

Retrieval – The act, method, or procedure for recovering stored data.

Review – In the context of a human-system interface design, a capability that returns a user to the first display in a defined transaction sequence, while retaining any entries made by the user.

Right justified – To adjust the printing positions of characters on a page so that the right margin of the page is regular. To shift the contents of a register so that the least significant digit is at some specified position of the register.

Ringback – An alarm display feature that provides a distinct cue such as a slow flash or audible tone to indicate that an alarm condition has cleared, i.e., the monitored parameter(s) has returned to its normal range.

Row – A horizontal arrangement of characters or other expressions.

Rubberbanding – In computer graphics, the continuous stretching, shrinking, or reorientation of connecting lines as a point defining a line or shape is moved.

Safety function – Safety functions are those functions that serve to ensure higher-level objectives and are often defined in terms of a boundary or entity that is important to plant integrity and the prevention of the release of radioactive materials. A typical safety function is "reactivity control." A high-level objective, such as preventing the release of radioactive material to the environment, is one that designers strive to achieve through the design of the plant and that plant operators strive to achieve through proper operation of the plant. The function is often described without reference to specific plant systems and components or the level of human and machine intervention that is needed to carry out this action. Functions are often accomplished through some combination of lower-level functions, such as "reactor trip." The process of manipulating lower-level functions to satisfy a higher-level function is defined here as a control function. During function allocation the control function is assigned to human and machine elements.

Safety goal – A high-level objective such as, "Preventing the release of radioactive material to the environment" which designers strive to achieve through the design of the plant, and which plant operators strive to achieve through its safe operation.

Safety-related – A term applied to those plant structures, systems, and components (SSCs) that prevent or mitigate the consequences of postulated accidents that could cause undue risk to the health and safety of the public (see Appendix B to Part 50 of Title 10 of the U.S. Code of Federal Regulations). These are the SSCs on which the design-basis analyses of the safety analysis report are performed. They also must be part of a full quality assurance program in accordance with Appendix B of that document.

Scale – A graduated series or scheme of rank or order.

Scaling – The positioning of displayed data elements with respect to a defined measurement standard.

Scatterplot – A scaled graph that shows relations among individual data points in a two- dimensional array.

Screen – The software-controlled visual interface of a monitor, e.g., the display surface of a CRT.

Screen dump – An action, usually performed with a keystroke sequence, that causes the exact contents of the current screen display to be captured for printing or storage in a file.

Screen structure – A generic display element, such as a menu bar or title.

Scroll – To move data being viewed in a line-by-line manner; to roll upward or downward.

Scrolling – An orientation for display framing in which a user conceives of data as moving behind a fixed display frame. The opposite of panning.

Secondary tasks – Those tasks that operators perform when interacting with the human-system interface that are not directed to the primary task. Secondary tasks may include: navigating through and paging displays, searching for data, choosing between multiple ways of accomplishing the same task, and making decisions regarding how to configure the interface.

Selecting – A user's action of identifying display elements to the computer to ready them for use in some way (e.g., to open a valve by an input device click on a graphic representation of a valve).

Selection display – Any display from which the operator may make a selection, such as choosing a plant variable, plant component, or a command. Two formats commonly used for selecting plant components and variables are the menu and mimic.

Separable display – Each process parameter is presented individually and no relationships between the parameters are shown by the representation itself. The key aspect of separable displays is not the individual parameters are presented, but that no interaction or relationship between them is perceived.

Sequence – An arrangement of items according to a specified set of rules.

Sequence control – Logic and means by which user's actions and computer responses are linked to become coherent transactions.

Service points – Equipment locations used for performing routine maintenance tasks, such as adjusting, cleaning, or replacing components.

Setpoint – The value of a monitored parameter that defines the boundary between the parameter's normal range and an alarm condition. An alarm condition exists when the parameter exceeds the normal range that is defined by the upper and/or lower limit setpoints. Graded alarms may have multiple setpoints outside the normal range that produce alarms that indicate increasing levels of severity of the abnormal condition, such as Low Level, or Low-Low Level.

Shared alarm – An alarm condition that is defined by the activation of one or more of a set of different process deviations. An example of a shared alarm is a "reactor coolant system trouble" message, which may be displayed when any one of the reactor coolant pumps malfunctions. An individual alarm message associated with the particular malfunctioning reactor coolant pump may also be displayed in addition to the former message.

Should – The word 'should' is used to denote a recommendation; see also 'may'.

Signal validation – A set of alarm processing techniques by which signals from redundant or functionally related sensors are compared and analyzed to determine whether a true alarm condition exists. The purpose of these techniques is to prevent false alarms being presented to the operator due to malfunctioning plant instrumentation, such as a failed sensor.

Significance processing – A class of alarm display processing which includes techniques that evaluate active alarm conditions to identify those that are true/valid but are of less operational significance than other active alarm conditions. This processing filters, suppresses, or reduces the priority of alarm messages that have been determined to be of less importance. For example, in an anticipated transient without scram event, alarms associated with minor disturbances on the secondary side of the plant are eliminated or lowered in priority.

Simulator – A facility that physically represents the human-system interface configuration and that dynamically represents the operating characteristics and responses of the plant in real time (See prototype and mockup).

Situation awareness – The relationship between the operator's understanding of the plant's condition and its actual condition at any given time.

Slip – An error in carrying out an intention. Slips result from "automatic" human behavior, when schemas, in the form of subconscious actions that are intended to accomplish the intention, get waylaid en route to execution. Thus, while one action is intended, another is accomplished. An expert's highly practiced behavior leads to the lack of focused attention that increases the likelihood of some forms of slips.

Soft control – A control device that has connections with the control or display system mediated by software rather than direct physical connections. As a result, the functions of a soft control may be variable and context-dependent rather than statically defined. Also, the location of a soft control may be virtual (e.g., within the display system structure) rather than spatially dedicated. Soft controls include devices activated from display devices (e.g., buttons and sliders on touch screens), multi-function control devices (e.g., knobs, buttons, keyboard keys, and switches that perform different functions depending upon the current condition of the plant, the control system, or the human-system interface), and devices activated via voice input.

Soft slider – An input format used to directly manipulate a variable over a set range of values (also called a slider bar or a scroll bar). A soft slider resembles a bar chart with a pointer directed toward the current value. They are typically manipulated via pointing interfaces, such as a touch screen or mouse. Input is provided by sliding the pointer along the length of the bar chart scale to the desired value. It is used when the range of possible values and the ratio of a value to the range must be displayed.

Spacing – The distance between any two objects.

Spatially focused, variable location, serial display – A display where alarms are presented in no fixed location and according to some logic, such as time or priority. Usually, the same display device can be used to present many different alarms (in contrast with SDCV display where a given location presents only one alarm). A scrolling message list is an example of this type of display.

Spatially dedicated, continuously visible (SDCV) alarm display – An alarm display that is in a spatially dedicated position and is always visible whether in an alarmed or cleared state. Conventional alarm tiles are an example of an SDCV alarm display.

Specular reflectance – The light incident on a surface at angle x that is reflected at angle – x (minus x).

Speech display – Speech messages (either computer-generated or a recorded human voice) presented through audio devices, such as speakers and headsets.

Speech recognition – Permits a user to provide spoken input that a computer interprets as data or commands.

Status information – Information pertaining to the state of the system or components (e.g., on/off, open/closed, automatic/manual) that is displayed either automatically or by user's request.

Status setpoints – Criterion values used in display systems to indicate a change in status of a variable, such as to indicate the approach to an unsafe operating condition.

Storage – Any device on which data can be entered, held, and retrieved. The act of storing data on such a device.

String – A linear sequence of entities such as characters or physical elements.

Stroke width – The width of a line comprising a character.

Style guide – A document that contains guidelines that have been tailored so they describe the implementation of human factors engineering guidance to a specific design, such as for a specific plant control room.

Stylus – Pen-shaped instrument used to "draw" images or point to icons or menu selections.

Subsystem – A collection of modules that perform a particular function.

Subtractive color process – The presentation of color images by selective absorption of projected light.

Suppression – A class of alarm display processing by which alarms determined by processing techniques to be less important, irrelevant, or otherwise unnecessary are not presented to the operators, but can be accessed by operators upon request. This approach is intended to help the operators focus attention on the most important alarm conditions when multiple alarm conditions exist.

Symbol – A representation of something by reason of relationship, association, or convention.

Syntax – The way in which words are put together to form phrases, clauses, or sentences.

System – An integrated collection of plant components and control elements that operate together, and possibly in conjunction with other systems, to perform a function.

System response time – The elapsed time between the initiation of a command and the notification to the user that the command has been completed.

System response – The manner in which the computer system behaves after receiving inputs from the user.

System security – Features that restrict personnel access to aspects of the computer system to prevent accidental or deliberate damage.

Table – A rows and columns structure consisting of functional areas that contain data and that may or may not require input. Tables may be used to present a variety of types of information. A collection of data in a form suitable for ready reference.

Task analysis – A method of detailing the components of a task in terms of the demands placed upon the human operator, the information required by the operator, the extent to which the task requires reliance on or coordination with other personnel, and the relation of the task to other tasks.

Task – A series of transactions that comprises part of a user's defined job. A group of activities that have a common purpose, often occurring in temporal proximity, and that utilize the same displays and controls.

Terminal – An input/output device used to enter and display data. Data are usually entered via a keyboard, and are usually displayed via a video screen (soft copy) or a printer (hard copy). A device, usually equipped with a keyboard and some kind of display, which can send and receive information over a communication channel.

Terminology – The technical or special terms of expressions used; nomenclature.

Test equipment – Diagnostic tools used to assess the status of equipment and locate faults that may be present.

Test points – Equipment locations used for conducting tests to determine the operational status of equipment and for isolating malfunctions. Test equipment may be connected at these points.

Text – The primary display for word processing, consists of alphanumeric character strings in linear arrays, making up words, sentences, and paragraphs. The main body of printed or written matter on a page or in a message.

Text entry – Initial entry and subsequent editing of textual data.

Tile – A type of spatially dedicated, continuously visible alarm-display that changes state (i.e., brightness, color, and/or flash rate) to indicate the presence or absence of an alarm condition, and includes text to identify the nature of the alarm state.

Tiled windows – Tiled windows (in contrast to layered windows) refers to the on-screen positioning of multiple windows side-by-side so that no window overlays information on another.

Tiling – A means of manipulating windows by which multiple windows on the same display abut, but do not overlap. As the number of windows increases in the tiled window environment, the size of each window decreases.

Touch screen – A control device that allows the user to communicate with the computer by touching a screen.

Touch zone – An area of a display that a user can activate to perform a predefined operation (e.g., displaying a pop-up window).

Trackball – A control device with which the user can control cursor movement in any direction by rotating a ball.

Transaction – An action by a user followed by a response from the computer. Transaction is used here to represent the smallest functional unit of user-system interaction.

Transilluminated display – A display having light passed through, rather than reflected off, an element to be viewed, e.g., illumination used on traditional annunciator tile panels or indicators using edge or back lighting techniques on clear, translucent, fluorescent, or sandwich-type plastic materials (in contrast to video display units).

Turnaround time – (1) The elapsed time between submission of a job to a computing center and the return of results. (2) In communications, the actual time required to reverse the direction of transmission from send to receive when using a half-duplex circuit.

Unacknowledged alarm – An alarm that has not been acknowledged and displays attention-directing characteristics, such as rapid flashing.

Undo – A capability that reverses the effect of the previous operation.

Unit of equipment – An assemblage of items that may include modules, components, and parts that are packaged together into a single hardware package.

Unvalidated data – Data that have not been checked for accuracy. (Unvalidated data may be determined to be either valid or invalid if subjected to a data validation process.)

Update – Regeneration of changing data to show current status, by user request or automatically by the computer.

User response time – The speed with which a user can enter commands and control a system regardless of the computer's ability to quickly process the commands.

User-system interaction – The set of methods provided in a computer system through which personnel and the computer communicate with each other.

Value – Specified data for a particular parameter or variable.

Variable – A quantity that can assume any of the given set of values.

Variable function key – A dedicated key which invokes functions of the system; the specific function invoked varies depending, e.g., on the mode of operation selected by the user.

Verification – The process by which the human-system interface design is evaluated to determine whether it acceptably satisfies personnel task needs and human factors engineering design guidance.

Verification step – A step in a transaction sequence that requires the user to verify an intention to perform a particular action. For example, the user selects an option and then presses the Enter key to verify the selection.

VDU – A video display unit.

Video display unit – An electronic device for the display of visual information in the form of text and/or graphics. Typically abbreviated VDU.

Vigilance – The degree to which an operator is alert.

Visual angle – A measure, in degrees, of the size of the retinal image subtended by a viewed object. It represents the apparent size of an object based on the relationship between an object's distance from the viewer and its size (perpendicular to the viewer's line of sight). An object of constant size will subtend a smaller visual angle as it is moved farther from the viewer. Visual angle is typically defined in terms of minutes of visual arc.

Warning signal – A signal that alerts the operator to a condition requiring immediate action (see caution signal).

Watchdog timer – An electronic self-testing feature that detects when an expected electrical signal is not received within an expected period, thus indicating a possible malfunction.

Window – A geometric area on a computer screen within which the system displays information or receives input from the user.

Window overlay – A portion of a display that is temporarily used to show added features such as requested data, menus, or user guidance, which may obscure previously displayed data.

Word – A character string or a bit string considered as an entity.

Word wrap – Occurs when words displaced from one line are moved to the next line so as to maintain the continuity of the text.

Workload – The physical and cognitive demands placed on plant personnel.

Workstation – The physical console at which a user works.

INDEX

INDEX

abbreviations, 49
acronyms, 49
advisory messages, 196
alarm response procedures, 297
alarm systems
  configuration, 290
  failure, 296
  functions, 263
  layout, 299
  reliability, 293
  testing, 294
alarms
  acknowledgment, 288
  coding, 277, 278, 279
  control, 287
  display, 268, 269, 283, 286
  high-priority, 271
  message lists, 285
  messages, 275
  processing, 265
  reset, 289
  shared, 273
  silencing, 287
  status, 272
alphanumeric characters, 47, 48
arrows, 59
auditory coding, 68
authentication, 210
automation, 185
axes, 54
bar charts, 28
borders, 59
chairs, 428
characters, 47
circuit breakers, 528
coding
  alarms, 277, 278
  auditory, 68, 279
  brightness, 66
  color, 60
  controls, 221
  display pages, 15, 16
  flash, 66, 67
  pattern, 65
  shape, 65
  size, 65
  visual, 278
color, 60
command language, 115
communication, 395
  computer-based, 405
  public address systems, 402
  radios, 401
  sound-powered phones, 400
  speech-based, 396
  telephones, 399
computer messages, 405
  creating, 406
  receiving, 409
  sending, 407
computer-based procedures
  backup, 385
  control, 376
  formatting, 375
  hardware, 384
  help function, 383
  implementation, 380
  lists, 373
  monitoring, 377
  navigation, 382
  organization, 374
  path monitoring, 381
  planning, 380
  reference materials, 372
  screen layout, 375
  steps, 370
  user actions, 379
  warnings, 372
configural displays, 42, 43
consoles
  sit-down, 418
  sit-stand, 423
  stand-up, 413
control room
  environment, 470
  equipment, 457, 465, 467
  layout, 459, 464, 465
  lighting, 475
  noise, 480
  staffing, 458, 465, 471
  storage, 462, 463, 469
  temperature, 473
  ventilation, 474
control-display integration, 429
controls, 217
  adjustment, 531
  alarms, 287, 288, 289
  and displays, 432

coding, 221
continuous adjustment, 242
grouping, 433
j-handles, 239
key-operated, 240
knobs, 242
local control stations, 490
multiple, 430
rocker switches, 249
rotary, 237
rotary selection, 244
slide switches, 247
soft controls, 343
thumbwheel, 246
toggle switches, 248
cursors
appearance, 149
control, 150
movement, 151
multiple, 153
multiple display, 156
pointing, 154
text entry, 155
data protection, 202
soft controls, 360
data quality, 71
demarcation lines, 444
desks, 426
diagrams, 38
direct manipulation, 138
display devices
gauges, 84
light indicators, 86
meters, 84
numeric readouts, 88
plotters, 81
printers, 81
projectors, 80
recorders, 81
display formats
bar charts, 28
data fields, 24
data forms, 24
diagrams, 38
flowcharts, 37
graphs, 31
histograms, 28
instrument panels, 44
lists, 21
maps, 40
mimics, 38
pie charts, 36
speech, 45
tables, 21
text, 18
voice, 45
display freeze, 180
display pages, 73
coding, 15, 16
grouping, 74, 75
multiple, 74, 76
task-related, 74
title, 73
display suppression, 181
display update, 180
displays
alphanumerics, 15
annotation, 13
coding, 16
color, 60
configural, 42, 43
control, 179
conventions, 10
flexibility, 15
freeze, 180
freezing, 13
group view, 313
integral, 42
integrated information, 42
large, 329
multiple, 431
references, 12
related information, 11, 14
sensitivity, 15
status, 11, 12, 13
suppression, 181
update, 180
windows, 171
documents
editing, 186, 192, 193
saving, 191
storage, 462
emergency equipment, 467
emergency lighting, 479
equipment
accessibility, 504
design, 517, 518, 524
labeling, 529
maintenance, 511
packaging, 518, 519, 521, 522, 523
protection, 516
status, 513

test, 543, 545
error messages, 197
errors
correction, 204
failure indications, 541
feedback, 159
soft controls, 361
fields, 24
files
editing, 191
flexibility, 208
formatting text, 18, 19, 20
forms, 24, 135
function keys, 131, 227
fuses, 528
gauges, 84
local control stations, 487
graphic tablets, 231
graphs, 31
grids, 54
group view displays
appropriate use, 327
group view displays, 313
communication, 321
crew coordination, 319
information access, 318
overview display, 315
user interaction, 324
handsets, 399
help, 206
computer-based procedures, 383
hierarchical menus, 123
highligtning
brightness, 66
flashing, 66
histograms, 28
humidity, 473
icons, 51
illuminated indicators, 86
illumination, 475
input confirmation, 201
input devices, 229
function keys, 227
keyboards, 223
pointing, 229
touch screens, 231
input formats
command language, 115
direct manipulation, 138
forms, 135
function keys, 131
macros, 134
menus, 118
natural language, 143
query language, 144
question and answer, 146
speech, 147
input validation, 199
instrument panels, 44
integral displays, 42
intercoms, 403
j-handles, 239
joysticks, 229
key switches, 240
keyboards, 223
knobs, 242
labeling, 435
equipment, 529
labels, 50
content, 439
lettering, 442
local control stations, 482, 484, 486
location, 437
temporary, 441
large displays, 329
light indicators, 86
light pens, 231
lighting, 475
local control stations, 503
ligthing
emergency, 479
lines, 59
lists, 21
local control stations
cold, 500
communication, 492, 493, 495, 496
controls, 490
CRTs, 488
gauges, 487
heat, 497
labels, 482, 484, 486
lighting, 503
meters, 487
noise, 494, 502
valves, 489, 491
vibration, 505
loudspeakers, 492
macros, 134
maintenance, 513
alarms, 295
supporting, 514, 515
maintenance, 511

maps, 40
menu bars, 126
menu options
  arrangement, 122
  coding, 129
  selection, 127
  wording, 129
menus, 118
  hierarchical, 123
  menu bars, 126
messages
  advisory, 196
  alarms, 285
  error, 197
  test results, 542
meters, 84
  local control stations, 487
mimics, 38
monitoring, 303, 305, 306, 307
mouses, 229
natural language, 143
navigation, 162, 165
  computer-based procedures, 382
  large pages, 169
noise, 494
  local control stations, 502
noise levels, 480
numeric data, 53
numeric readouts, 88
operator support systems, 389
paging, 182
paging systems, 493
panels, 424
  layout, 445, 447, 449
pattern coding, 65
personal storage, 469
pie charts, 36
plotters, 81
pointing devices, 229
printers, 81
procedures
  computer-based, 369
  sharing, 465
programmable function keys, 134
projectors, 80
prompts, 157
public address systems, 402
pushbuttons
  legend, 235
  standard, 234
pushbuttons, 233
query language, 144
question and answer, 146
radios, 401
readouts, 88
recorders, 81
response time, 160
rocker switches, 249
rotary controls, 237
rotary selectors, 244
scales, 54
scrolling, 182
security, 213
service points, 533, 534, 536
shape coding, 65
size coding, 65
slide switches, 247
soft controls, 343
  data protection, 360
  display, 344, 353
  display devices, 350
  errors, 357
  feedback, 361
  input, 355, 359
  input fields, 346
  input formats, 347
  interaction, 351
  interlocks, 356
  selection, 358
  selection displays, 345
sound levels, 480
spare parts, 463
speech displays, 45
speech input, 147
stand-up consoles, 413, 418, 423
storage
  personal, 469
supplies, 463
switches
  key-operated, 240
  slide, 247
  toggle, 248, 249
symbols, 51
tables, 21
tagouts, 441
telephones, 399
  sound-powered, 400
temperature, 473
  local control stations, 497, 500
test equipment, 543, 545
test points, 533, 534, 536, 545
testing

automated, 538
built-in, 537
equipment, 540
on-line, 539
text displays, 18
thumbwheels, 246
toggle switches, 248
tools, 463
touch screens, 231
trackballs, 229
UHF transceivers, 403
update rate, 71
updating, 180
user guidance, 206
user identification, 210
user interface, 101
validation, 199
valves
local control stations, 489, 491
ventilation, 474
vertical panels, 424
vibration, 505
video display units, 77
voice displays, 45
walkie-talkies, 401
windows, 171
workstations, 413, 418, 423
sit-down, 418
sit-stand, 423
stand-up, 413