July 19, 2006

Mr. R. T. Ridenoure
Vice President - Chief Nuclear Officer
Omaha Public Power District
Fort Calhoun Station FC-2-4 Adm.
Post Office Box 550
Fort Calhoun, NE 68023-0550

SUBJECT: EXEMPTION FROM 10 CFR 72.48, 10 CFR 72.212 AND 72.214 FOR DRY SPENT FUEL STORAGE ACTIVITIES - FORT CALHOUN (TAC NO. L23984)

Dear Mr. Ridenoure:

This is in response to your letter dated June 9, 2006, as supplemented on July 3, 2006, July 7, 2006, and July 12, 2006, requesting an exemption from 10 CFR 72.48(c)(2)(viii), 72.212(a)(2), 72.212(b)(2)(i)(A), 72.212(b)(7), and 72.214, pursuant to 10 CFR 72.7. Sections 10 CFR 72.212(a)(2), 72.212(b)(2)(i)(A), 72.212(b)(7), and 72.214 specifically require storage in casks approved under the provisions of 10 CFR Part 72 and compliance with the conditions set forth in the Certificate of Compliance (CoC) for each dry spent fuel storage cask used by an independent spent fuel storage installation (ISFSI) general licensee. Section 10 CFR 72.48(c)(2)(viii) requires a general licensee to request a certificate holder obtain a CoC amendment if a change results in a departure from a method of evaluation described in the final safety analysis report (FSAR).

The Transnuclear, Inc. (TN) NUHOMS® CoC No. 1004 provides requirements, conditions, and operating limits in Attachment A, Technical Specifications (TSs). In your June 9, 2006, letter Omaha Public Power District (OPPD) (herein referred to as OPPD or licensee) requested an exemption from the requirements of 10 CFR 72.48(c)(2)(viii), 72.212(a)(2), 72.212(b)(2)(i)(A), 72.212(b)(7) and 10 CFR 72.214 to enable OPPD to use a light weight transfer cask (TC) and allow the use of an earlier start time for vacuum drying in conjunction with the Standardized NUHOMS® Storage System, CoC 1004, at the Fort Calhoun Station (FCS).

OPPD requested exemption from the requirements of 10 CFR 72.212(a)(2), 72.212(b)(2)(i)(A), 72.212(b)(7) and 10 CFR 72.214 in order to permit changes from TSs in Amendment 8 to CoC No. 1004 which would allow changes to the TC dose rate measurements, and allow an earlier start time for vacuum drying. Specifically, the exemption would be from CoC No. 1004 Attachment A, Technical Specifications, 1.2.1, “Fuel Specification,” 1.2.11, “Transfer Cask Dose Rates with a Loaded 24P, 52B, 61BT, or 32PT Dry Shielded Canister,” and 1.2.17a, “32PT Dry Shielded Canister Vacuum Drying Duration Limit.” In addition, OPPD requested an exemption from the requirements of 10 CFR 72.48(c)(2)(viii), which requires that a general licensee request that the certificate holder obtain a CoC amendment prior to implementing a change that would result in a departure from a method of evaluation described in the FSAR for the design. The method of evaluation for which OPPD is seeking an exemption involves the thermal analysis associated with the TC while it is inside the transfer trailer radiological shielding.

In your letter of June 9, 2006, OPPD requested that the exemption be limited to a single loading campaign of four 32PT dry shielded canisters (DSCs) and committed to a maximum decay heat load per DSC of 11 kilowatts (kW). This decay heat load is less than the CoC No. 1004 Attachment A, Technical Specification, Table 1-1e maximum decay heat limit of 24 kW per

DSC. In addition, in its July 3, 2006, supplement OPPD indicated that the minimum cooling time for the fuel that it intended to load is 16.2 years. This amount of time is greater than the minimum amount of time specified in TS Table 1-1e.

We understand that OPPD requested this exemption to begin the transfer of the OPPD spent fuel pool contents to the ISFSI prior to the start of the next refueling outage, which is scheduled to begin on September 9, 2006. OPPD stated that the exemption is necessary to allow FCS to maintain full core offload capability after the 2006 refueling outage, allow the receipt and storage of new fuel, and allow better management of decay heat loads within the spent fuel pool (including minimization of fuel handling activities) until the spring 2008 refueling outage. Regarding maintaining full core offload capability, during the September 2006 refueling outage, major components of the reactor coolant system will be replaced including two steam generators, the reactor vessel head and the pressurizer. The large amount of reactor coolant system components being replaced during the outage raises the likelihood that foreign material could be introduced into the reactor vessel and potentially deposited under the core support plate. This scenario would require the core to be offloaded to the spent fuel pool and the reactor core barrel to be removed to allow removal of the foreign material.

Regarding receipt and storage of the new fuel, OPPD intends to inspect 44 new fuel assemblies and 49 new control rods to support the 2006 refueling outage. Once inspections are complete the assemblies are transferred from the new fuel storage rack into the spent fuel pool. This fuel handling operation requires more resources, presents more radiological challenges, and is more complicated than normal intra-spent fuel pool fuel movements. Consequently, it is OPPD's practice to perform these operations prior to a refueling outage before the spent fuel from the core is offloaded into the spent fuel pool.

The exemption is necessary because the U.S. Nuclear Regulatory Commission (NRC) has not received an amendment request for CoC No. 1004 to allow changes to the TC dose rate measurements, an earlier start time for vacuum drying and the use of a method of thermal analysis that is a departure from the methodology described in the Standardized NUHOMS® updated FSAR. The staff would have to review such an amendment request and only after making the appropriate findings would the staff initiate a 10 CFR 72.214 rulemaking to implement the change. This process typically takes at least 10 months from the receipt of the amendment request for simple license amendments. Complex license amendments can take over 30 months. Therefore, an amendment to allow changes to the TC dose rate measurements, allow an earlier start time for vacuum drying and to allow the use of a method of thermal analysis that is a departure from the methodology described in the Standardized NUHOMS® updated FSAR can not be completed in time to support OPPD's stated needs.

The NRC staff performed a safety evaluation of the proposed exemption and commitments. The enclosed safety evaluation concludes that the proposed additions and revisions meet the criteria for granting an exemption. For this action, an Environmental Assessment and Finding of No Significant Impact has been prepared and published in the Federal Register (71 FR 41058, dated July 19, 2006). A copy of the Federal Register Notice was provided to you by letter dated July 13, 2006.

Based on the foregoing considerations, the NRC has determined that granting the proposed exemption from the provisions of 10 CFR 72.48(c)(2)(viii), 72.212(a)(2), 72.212(b)(2)(i)(A), 72.212(b)(7) and 10 CFR 72.214 is authorized by law, will not endanger life or property or the

common defense and security, and is otherwise in the public interest. Accordingly, the NRC hereby grants this exemption effective immediately. This exemption is subject to the conditions specified in the enclosed safety evaluation report. These conditions are summarized as follows:

1) OPPD will be limited to loading a total of four 32PT DSCs.

2) OPPD shall limit the decay heat level per DSC to 11 kW.

3) OPPD shall limit the cooling time of the fuel that it intends to load to a minimum of 16.2 years.

4) The TS 1.2.11 dose rate limit/specification are substituted with the limit of 170 mrem/hr in the axial direction and 110 mrem/hr in the radial direction.

The staff notes that the use of the OS197L TC versus the OS197 TC would increase operational dose rates due to the reduced shielding. Thus, under these conditions OPPD plans to move the loaded OS197L TCs from the spent fuel pool to the decon area and later from the decon area to the transfer trailer by remote means. The staff has determined that OPPD established measures to limit personnel exposures during this operation to as low as reasonably achievable (ALARA) (Inspection Report 050-00285/06-002; 072-00054/06-002, dated July 19, 2006).

The staff's review of OPPD's application identified several statements in the shielding and dose areas with which the staff does not agree. These areas of disagreement are documented in Section 2.3.4 of the attached safety evaluation to clearly identify these areas and to ensure that these statements are not referenced in future applications or 10 CFR 72.48 evaluations as areas where OPPD or TN have gained prior approval from the NRC staff. These areas of disagreement do not impact the staff's ability to conclude that by granting the exemption OPPD meets the shielding and dose requirements of 10 CFR Part 72 and 10 CFR Part 20.

If you have any questions, please contact me or Joseph Sebrosky of my staff at 301-415-8500. Any future correspondence related to this action should reference Docket No. 72-54 and TAC No. L23984.

Sincerely,
/RA/
William H. Ruland, Deputy Director
Spent Fuel Project Office
Office of Nuclear Material Safety
and Safeguards

Docket Nos. 72-54, 50-285

Enclosure: Safety Evaluation

cc: Service List

Ft. Calhoun Station, Unit 1 Service List

cc:

Winston & Strawn
ATTN: James R. Curtiss, Esq.
1700 K Street, N.W.
Washington, DC 20006-3817

Chairman
Washington County Board of Supervisors
P.O. Box 466
Blair, NE 68008

Mr. John Hanna, Resident Inspector
U.S. Nuclear Regulatory Commission
P.O. Box 310
Fort Calhoun, NE 68023

Regional Administrator, Region IV
U.S. Nuclear Regulatory Commission
611 Ryan Plaza Drive, Suite 400
Arlington, TX 76011-4005

Ms. Julia Schmitt, Manager
Radiation Control Program
Nebraska Health & Human Services R & L
Public Health Assurance
301 Centennial Mall, South
P.O. Box 95007
Lincoln, NE 68509-5007

Mr. David J. Bannister, Manager
Fort Calhoun Station
Omaha Public Power District
Fort Calhoun Station FC-1-1 Plant
P.O. Box 550
Fort Calhoun, NE 68023-0550

Mr. Joe L. McManis
Manager - Nuclear Licensing
Omaha Public Power District
Fort Calhoun Station FC-2-4 Adm.
P.O. Box 550
Fort Calhoun, NE 68023-0550

Mr. Daniel K. McGhee
Bureau of Radiological Health
Iowa Department of Public Health
Lucas State Office Building, 5th Floor
321 East 12th Street
Des Moines, IA 50319

SAFETY EVALUATION REPORT

EXEMPTION FOR

OMAHA PUBLIC POWER DISTRICT

FORT CALHOUN STATION

INDEPENDENT SPENT FUEL STORAGE INSTALLATION

DOCKET NO. 72-54

1.0 SUMMARY

By letter dated June 9, 2006, as supplemented on July 3, 2006, July 7, 2006, and July 12, 2006, Omaha Public Power District (OPPD) (herein after referred to as OPPD or licensee) requested an exemption from the requirements of 10 CFR 72.48(c)(2)(viii), 72.212(a)(2), 72.212(b)(2)(i)(A), 72.212(b)(7) and 10 CFR 72.214 to enable OPPD to use a light weight transfer cask (TC) and allow the use of an earlier start time for vacuum drying in conjunction with the Standardized NUHOMS® Storage System, Certificate of Compliance (CoC) No. 1004, at the Fort Calhoun Station (FCS). Sections 10 CFR 72.212(a)(2), 72.212(b)(2)(i)(A), 72.212(b)(7) and 10 CFR 72.214 specifically require storage in casks approved under the provisions of 10 CFR Part 72 and compliance with the conditions set forth in the Certificate of Compliance (CoC) for each dry spent fuel storage cask used by an independent spent fuel storage installation (ISFSI) general licensee. In addition, OPPD seeks an exemption from the requirements of 10 CFR 72.48(c)(2)(viii), which requires that a general licensee request that the certificate holder obtain a CoC amendment prior to implementing a change that would result in a departure from a method of evaluation described in the final safety analysis report (FSAR) for the design.

OPPD requested exemption from the requirements of 10 CFR 72.212(a)(2), 72.212(b)(2)(i)(A), 72.212(b)(7) and 10 CFR 72.214 in order to permit changes from Technical Specifications (TSs) in Amendment 8 to CoC No. 1004 which would allow changes to the TC dose rate measurements, and allow an earlier start time for vacuum drying. Specifically, the exemption would be from CoC No. 1004 Attachment A, Technical Specifications, 1.2.1, "Fuel Specification," 1.2.11, "Transfer Cask Dose Rates with a Loaded 24P, 52B, 61BT, or 32PT Dry Shielded Canister," and 1.2.17a, "32PT Dry Shielded Canister Vacuum Drying Duration Limit." In addition, OPPD requested an exemption from the requirements of 10 CFR 72.48(c)(2)(viii), which requires that a general licensee request that the certificate holder obtain a CoC amendment prior to implementing a change that would result in a departure from a method of evaluation described in the FSAR for the design. The method of evaluation for which OPPD is seeking an exemption involves the thermal analysis associated with the TC while it is inside the transfer trailer radiological shielding.

OPPD requested that the exemption be limited to a single loading campaign of four 32PT dry shielded canisters (DSCs) and committed to a maximum decay heat load per DSC of

11 kilowatts (kW). This decay heat load is less than the CoC No. 1004 Attachment A, TS, Table 1-1e maximum decay heat limit of 24 kW per DSC. In addition, in its July 3, 2006, supplement OPPD indicated that the minimum cooling time for the fuel that it intended to load is 16.2 years. This amount of time is greater than the minimum amount of time specified in TS Table 1-1e.

OPPD requested this exemption to begin the transfer of the OPPD spent fuel pool contents to the independent spent fuel storage installation (ISFSI) prior to the start of the next refueling outage, which is scheduled to begin on September 9, 2006. OPPD stated that the exemption is necessary to allow FCS to maintain full core offload capability after the 2006 refueling outage, allow the receipt and storage of new fuel, and allow better management of decay heat loads within the spent fuel pool (including minimization of fuel handling activities) until the spring 2008 refueling outage. Regarding maintaining full core offload capability, during the September 2006 refueling outage major components of the reactor coolant system will be replaced including two steam generators, the reactor vessel head and the pressurizer. The large amount of reactor coolant system components being replaced during the outage raises the likelihood that foreign material could be introduced into the reactor vessel and potentially deposited under the core support plate. This scenario would require the core to be offloaded to the spent fuel pool and the reactor core barrel to be removed to allow removal of the foreign material.

Regarding receipt and storage of the new fuel, OPPD intends to inspect 44 new fuel assemblies and 49 new control rods to support the 2006 refueling outage. Once inspections are complete the assemblies are transferred from the new fuel storage rack into the spent fuel pool. This fuel handling operation requires more resources, presents more radiological challenges, and is more complicated than normal intra-spent fuel pool fuel movements. Consequently, it is OPPD's practice to perform these operations prior to a refueling outage before the spent fuel from the core is offloaded into the spent fuel pool.

The exemption is necessary because the U.S. Nuclear Regulatory Commission (NRC) has not received an amendment request for CoC No. 1004 to allow changes to the TC dose rate measurements, an earlier start time for vacuum drying, and the use of a method of thermal analysis that is a departure from the methodology described in the Standardized NUHOMS® updated FSAR. The staff would have to review such an amendment request and only after making the appropriate findings would the staff initiate a 10 CFR 72.214 rulemaking to implement the change. This process typically takes at least 10 months from the receipt of the amendment request for simple license amendments. Complex license amendments can take over 30 months. Therefore, an amendment to allow changes to the TC dose rate measurements, an earlier start time for vacuum drying and the use of a method of thermal analysis that is a departure from the methodology described in the Standardized NUHOMS® updated FSAR can not be completed in time to support OPPD's stated needs.

Scope of Staff Evaluation

OPPD is not requesting NRC approval of the light weight TC design because Transnuclear Inc. (TN), the certificate holder for the Standardized NUHOMS® design, utilized the 10 CFR 72.48 process to add the light weight TC to the FSAR for the Standardized NUHOMS® design. TN evaluated the light weight TC (which TN designates as the OS197L TC) design against the criteria in 10 CFR 72.48 and determined that prior NRC approval for the OS197L TC design was not needed. In addition, TN does not believe prior NRC approval is needed for the change

in operations to allow the complete draining of the DSC prior to it leaving the spent fuel pool. As part of the inspection process at the FCS prior to initiation of fuel loading, NRC identified and verbally communicated several issues/concerns regarding the OS197L TC design. This led OPPD to the conclusion that the optimum path for resolving the issue was to submit an exemption request.

The staff's review is limited to the scope of OPPD's exemption request. The staff did not review all aspects of the OS197L TC because OPPD only seeks an exemption for a limited area. In addition to limiting the scope of the review, the staff's review of the exemption request is based on the conditions at the FCS such as:

- limited to loading of four 32PT canisters
- limited to fuel assemblies with low decay heat (11kW per DSC)
- limited to fuel assemblies with a minimum cooling time of 16.2 years to minimize the radiological source term
- robust as low as reasonably achievable (ALARA) controls in place to compensate for the high dose rates associated with the OS197L TC
- stated reasons by OPPD for the need to use a 75 ton crane, maintain full core offload capability, allow receipt and storage of new fuel, and to allow better management of decay heat loads within the spent fuel pool

The staff's review and conclusions for this exemption therefore, does not constitute approval for the use of the OS197L TC at other sites or at FCS for additional casks beyond four.

The NRC has evaluated the technical issues associated with this exemption request and proposed commitments and concludes in the discussion below that the proposed additions and revisions meet the criteria for granting an exemption.

2.0 DISCUSSION

2.1 Background

Light Weight Transfer Cask

OPPD proposes to use the OS197L TC at the FCS. The OS197L TC has reduced shielding including the elimination of all the lead shielding from previous versions of the TC. The reduced shielding results in a lower weight for the TC. The OS197L TC was developed by TN to be used at plants with reduced spent fuel pool building crane capacity. The OS197L TC is intended for plants that are limited to a 75 ton spent fuel pool building crane capacity. The TC that the OS197L TC replaces (which TN designates as the OS197 TC) requires a 100 ton spent fuel pool building crane capacity. Because the OS197L TC has less shielding (including the elimination of all the lead shielding) than the OS197 TC, the OS197L TC surface dose rates are higher than the OS197 TC with lead shielding. To reduce personnel doses, crane operations associated with the OS197L TC are done remotely and supplemental shielding is provided in the decontamination area where the DSC is welded and on the transfer trailer that is used to transport the OS197L TC to the horizontal storage module (HSM). The supplemental shielding used in the decontamination area is shown in Figure 1. The supplemental shielding provided on the transfer trailer is shown in Figure 2.

Change to Sequence of Operations

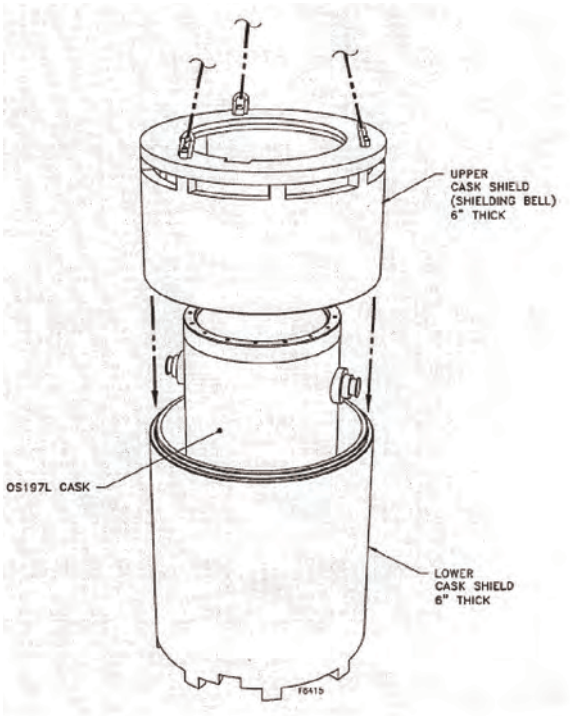

Figure 1 - Supplemental Shielding in Decontamination Area

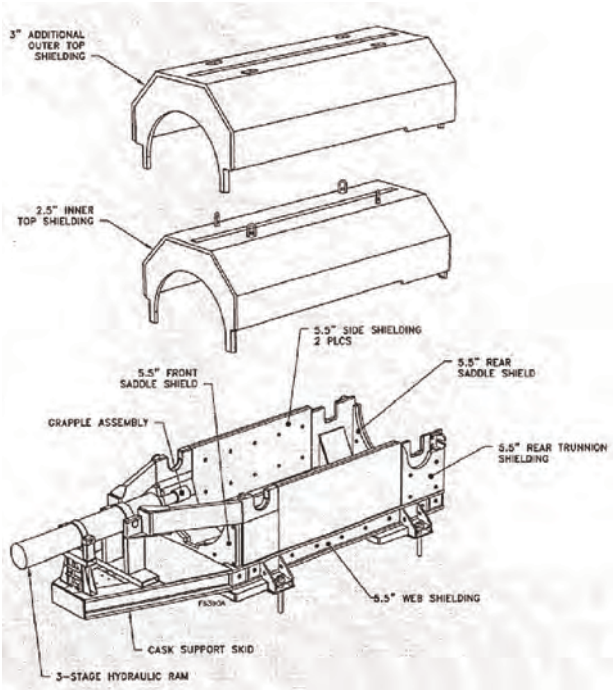

Figure 2 - Supplemental Shielding on Transfer Trailer

In the current FSAR draining up to 750 gallons of water from the DSC prior to it leaving the spent fuel pool is allowed to reduce the weight on the crane. The DSC is then placed in the decontamination area where the inner top cover plate is welded. During the welding process approximately 750 gallons of water remains in the DSC. After the welding is completed and the weld examinations are successfully performed the remaining water in the DSC is removed and vacuum drying is started. Unlike what is currently described in the FSAR, OPPD plans to remove the majority of the water from the DSC prior to it leaving the spent fuel pool. OPPD plans to perform the welding of the DSC inner top cover plate with the DSC in the drained condition.

2.2 Thermal Evaluation

The staff evaluated the exemption request to TS 1.2.17a associated with Certificate of Compliance (CoC) No. 1004 Amendment 8, for the Standardized NUHOMS-32PT System. The staff also evaluated the exemption request to 10 CFR 72.48c(2)(viii) (departure from a method of evaluation described in the updated FSAR) to use a different thermal analysis methodology for the transfer trailer.

Exemption Request to TS 1.2.17a

OPPD requested an exemption regarding the TS limit text on the start of vacuum drying. Instead, OPPD will start the time limit for vacuum drying earlier in the loading sequence and will use helium as the backfill gas. The time limits of TS 1.2.17a (32PT Dry Shielded Canister Vacuum Drying Duration Limit) were selected to ensure that the maximum cladding temperature is within the acceptable limit of 752°F during vacuum drying. These time limits also ensure that the cladding temperature meets the thermal cycling criteria of 117°F during drying, helium backfilling, and transfer operations (Reference: U.S. Nuclear Regulatory Commission, "Interim Staff Guidance No. 11, "Cladding Considerations for the Transportation and Storage of Spent Fuel.")

OPPD proposes to start the clock at the time that the initial 750-gallon drain down from the canister is achieved, which is prior to movement of the cask/canister to the decontamination area. At this time, the fuel assemblies (FAs) will have just been removed from the fuel pool. Draining 750 gallons is anticipated to take approximately 1-2 hours. The FAs will be approximately half submerged in water inside the Dry Shielded Canister (DSC). Therefore the 215°F initial fuel clad temperature assumption is bounded.

OPPD has anticipated, based upon a review of the loading sequence, that vacuum drying can be completed within the 31 hour limit of TS 1.2.17a. Should the end of vacuum drying not be accomplished within the TS 1.2.17a time limits, the existing TS action statement shall be entered, which requires that a helium atmosphere greater than 0.1 atm be established within 2 hours. The TS also requires that OPPD (the user) determine the cause of the failure. Once the above two actions are accomplished, the vacuum drying clock can be reset and the vacuum drying restarted.

Exemption Request to 72.48(c)(2)(viii) - Use of a Different Thermal Methodology

During inspection activities, the NRC questioned whether the thermal analysis of the OS197L TC on the transfer trailer with additional shielding involves a change in method of analysis, as defined in 10 CFR 72.48(c)(2)(viii). To address this issue, OPPD determined that the optimum path forward was to seek an exemption from 10 CFR 72.48(c)(2)(viii). As part of the exemption request OPPD submitted the thermal analysis for this configuration. In order to expedite the review, OPPD limited the total DSC heat load to 11 kW based on the regional loading configuration shown on Figure 1 of the exemption request. The thermal methodology used by OPPD utilized the FLUENT code to calculate TC surface temperatures during transfer in the transfer trailer. OPPD then used the FLUENT results to obtain the maximum peak cladding temperature during transfer operation. The predicted maximum fuel cladding temperature was extrapolated based on DSC ANSYS analysis results for off-normal and normal transfer. A thermal margin of approximately 280°F was shown based on the proposed new method of analysis. The analysis was based on effective thermal conductivity values obtained for a CE 14x14 fuel assembly type, which is the type of fuel OPPD intends to store in TN's NUHOMS® 32PT DSCs.

OPPD has committed to limit the maximum decay heat to 11 kW per DSC for CE 14x14 fuel assembly types and the loading configuration shown on Figure 1 of the exemption request. The total decay heat per DSC is less than the CoC No. 1004 allowable maximum of 24 kW per DSC for NUHOMS® 32PT DSC. The staff performed a confirmatory calculation to verify the

results obtained by OPPD using the new thermal analysis method. The new thermal analysis method used by OPPD in this exemption request shall be limited to support the spent fuel transfer activities specific to the FCS.

Based on the technical information provided in the exemption request, the significant margin contained in the OPPD results, and the staff confirmatory calculation the staff finds that there is reasonable assurance the applicant meets the thermal requirements of 10 CFR Part 72.

2.3 Shielding Evaluation

The staff evaluated the exemption request to TS 1.2.1 and 1.2.11 associated with CoC No. 1004 Amendment 8, for the Standardized NUHOMS-32PT System. During the staff's review of the exemption request the staff noted several statements in OPPD's application with which the staff did not agree. These areas of disagreement did not prevent the staff from granting the exemption. However, for completeness and to prevent these areas from being cited in future 10 CFR 72.48 evaluations as having received prior approval by the NRC, these areas of disagreement are detailed in Section 2.3.4 of this report.

The staff notes that the two-piece neutron shield design for the OS197L introduces a potential neutron streaming path that was not present on the OS197 TC, which had a one-piece neutron shield. The light weight TC has two longitudinal seam welds connecting the two halves of the neutron shield. Each weld is 2 inches wide and 3.5 inches thick; essentially replacing 3 inches of water with 3 inches of steel. Because steel is a much less effective neutron shield than water, users should be aware of the potential for a significant increase in neutron dose rate in the vicinity of the seam welds. Radiation surveys and personnel radiation monitoring should be adequate to characterize the radiation fields present and measure doses to personnel, respectively.

OPPD requested that the exemption be limited to fuel parameters as identified in Table 1 of Attachment 1 to the exemption request. In a supplement to the exemption request dated July 3, 2006, OPPD indicated that the assemblies that will be transferred using the OS197L TC will have been cooled for a minimum of 16.2 years.

2.3.1 Exemption Request to TS 1.2.1

The applicant requested the following exemption from the bases for TS 1.2.1:

> *An exemption is requested in connection with the statements in the Bases section that describe the transfer cask surface dose rates for the 24P and the 52B canisters. The exemption would allow disregarding the wording on the transfer cask surface dose rates in the Technical Specification Bases. All other elements of the Limit/Specifications and Applicability remain in force.*

The staff concluded that an exemption from the following text in the bases of TS 1.2.1 is also necessary:

> *The radiological design criterion is that fuel stored in the NUHOMS® system must not increase the average calculated HSM or transfer cask surface dose*

rates beyond those calculated for the 24P, 24PHB, 52B, 61BT, or 32PT canister full of design basis fuel assemblies with or without BPRAs.

Due to the reduced shielding of the OS197L TC, the TC surface dose rates will increase beyond those calculated for the 32PT design basis fuel when the OS197L TC is used for fuel-transfer operations. While specific dose rate limits for the 32PT are not given in this bases section, the TS was written for a TC with different, more robust shielding characteristics. The surface dose rate of the OS197 TC (more robust shielding than the OS197L TC) loaded with the 32PT DSC with design basis fuel in Table M.5-5 of the FSAR is 950 mrem/hour. The surface dose rate of the OS197L TC loaded with the 32PT DSC with design basis fuel (not the fuel permitted in this exemption) was calculated to be 53,000 mrem/hour (56 times higher than the FSAR Table M.5-5 value). The staff does not accept the view that the surface dose rates can be calculated on the supplemental shielding rather than on the surface of the TC itself.

Changing the design basis fuel and reducing the shielding in the TC have the same effect of increasing TC surface dose rates. The bases for this TS clearly indicate that the use of different fuel must not increase the average calculated TC surface dose rates. The staff takes this to mean that one of the primary goals of this TS is to ensure that the TC surface dose rate does not significantly increase. Use of the OS197L significantly increases the TC surface dose rate, hence the staff believes an exemption is needed from this portion of the bases as well.

Attachment 1 (page 12) to OPPD's exemption request indicates that the maximum expected (normal condition) TC surface dose rate for the FCS 11 kW loading is approximately 13 rem/hour. This is about a factor of almost 14 greater than the design basis fuel within the standard transfer cask and is roughly a factor of four lower than the 53 rem/hour surface dose rate calculated for the OS197L TC loaded with design basis fuel. The staff has taken this into consideration in evaluating OPPD's exemption request.

2.3.2 Exemption Request to TS 1.2.11

TS 1.2.11 Limit/Specification states the following:

Dose rates from the transfer cask shall be limited to levels which are less than or equal to:

a. 200 mrem/hr at 3 feet with water in the DSC cavity

b. 500 mrem/hr at 3 feet without water in the DSC cavity

The stated objective of TS 1.2.11 is to ensure that the DSC has not been inadvertently loaded with fuel not meeting the specifications and to maintain dose rates ALARA.

OPPD's exemption request states that "OPPD acknowledges that the description of the transfer cask surface dose rates, described in TS 1.2.11, does not explicitly address the supplemental shielding, and that the limits cannot be met with the use of the bare OS197L TC alone."

TS 1.2.11 does not state that limit (a) is for the axial measurement and limit (b) is for the radial measurement. However, the applicant's exemption request has proposed new dose rate limits for the axial and radial measurements. Because the applicant provided appropriate, geometry-

specific dose rate calculations supporting each limit, the staff finds it acceptable to allow, through this exemption, limit (a) to be met via an axial measurement, and limit (b) to be met via radial measurements in conjunction with the use of 6 inches of supplemental steel shielding in the radial direction. This is only acceptable because the applicant calculated TS limits specifically for the axial and radial directions, and the calculation for the radial direction included the supplemental shielding in the model.

The applicant proposed dose rate limits to substitute for the TS 1.2.11 limits. Specifically, the applicant proposed an axial dose rate limit of 170 mrem/hr and a radial dose rate limit of 110 mrem/hr. The axial dose rate limit of 170 mrem/hr is to be taken under the conditions in Table 1 below. The radial dose rate limit of 110 mrem/hr is to be taken under the conditions in Table 2 below.

Table 1 Axial Dose Rate Measurement Configuration
32PT DSC inside the OS197L inside the decon sleeve/bell
water drained from the DSC
TC/DSC annulus full (within approximately 1 foot of the top)
TC neutron shield full
top shield plug in place and included in axial shielding
inner top cover plate in place and included in axial shielding
automated welding system (AWS) with integral shield in place and included in axial shielding
measurement taken at vertical centerline of DSC, 3 feet from AWS shield

Table 2 Radial Dose Rate Measurement Configuration
32PT DSC inside OS197L inside decon sleeve/bell
water drained from the DSC
TC/DSC annulus full (within approximately 1 foot of the top)
TC neutron shield full
6 inch nominal thickness carbon steel decon sleeve/bell in place and included in radial shielding
measurement taken at outside surface (contact) of decon sleeve/bell

2.3.3 Basis for Granting the Exemption to TS 1.2.1 and 1.2.11

The staff performed confirmatory calculations to determine if the 13 rem/hour value that OPPD references in its application is a reasonable value. The staff used the Origen-ARP code to generate a source term based on the fuel parameter information provided in the exemption request and the 16.2 year minimum cooling time provided in OPPD's supplement dated July 3, 2006. The staff then used this source term in a simplified MCNP5 model of the TC. The staff's calculations confirm OPPD's calculated TC surface dose rate of 13 rem/hr. Therefore, the staff finds OPPD's 13 rem/hour estimate for the TC surface dose rate to be reasonable. Additionally, the staff's confirmatory analyses provide reasonable assurance that the dose limit requirements of 10 CFR 72.104 and 10 CFR 72.106 will be met.

The staff's basis for concluding that granting the exemption to the wording in TS 1.2.1 (i.e, the wording associated with the 24P and 52B canisters, and the wording associated with the 24P, 24PHB, 52B, 61BT and 32PT canisters) is appropriate includes the following:

1) Results of the staff's confirmatory calculations using the FCS assumed fuel parameters are consistent with the 13 rem/hour TC surface dose rate value provided in OPPD's exemption request.

2) Use of fuel with a minimum cooling time of 16.2 years ensures that the OS197L TC surface dose rate will be significantly lower than it would be for bounding type fuel.

3) Appropriate ALARA precautions are being taken at the FCS given the use of the OS197L TC. These ALARA precautions include (but are not limited to): 1) performance of radiation surveys to characterize the dose rates, 2) use of the thick supplemental shielding in the decon area and on the transfer trailer to minimize occupational and public doses, 3) remote operation of the spent fuel pool building crane to minimize occupational doses, and 4) radiation protection provisions provided in section M.8.1 of the updated FSAR for the Standardized NUHOMS® design. These ALARA precautions and other ALARA precautions are subject to inspection by the NRC staff during inspections of the first loading of the 32PT DSC at the FCS.

4) Use of the OS197L TC is limited to four DSCs and is found to be acceptable at FCS due to the extenuating circumstances that are described in OPPD's exemption request (e.g., limited to use of a 75 ton crane, loss of full core offload capability, allow receipt and storage of new fuel, and allow better management of decay heat loads within the spent fuel pool).

The staff's basis for concluding that an exemption to TS 1.2.11 (i.e., to substitute the TS 1.2.11 dose rate limit/specification values with an axial value of 170 mrem/hr under the conditions in Table 1 above and a radial value 110 mrem/hr under the conditions in Table 2 above) is appropriate includes the following:

1) OPPD calculated TS limits specifically for the axial and radial directions and the calculations in the radial direction included the supplemental shielding. OPPD's calculated values are consistent with the TS 1.2.11 values. OPPD also justified applying a dose rate limit value in the axial direction and a dose rate limit in the radial direction for

their specific fuel. In addition, OPPD demonstrated that it has appropriate procedures in place to detect a fuel misload.

2) The applicant demonstrated that the appropriate procedures will be in place to identify a fuel misloading and maintain doses ALARA.

3) Items 2, 3, and 4, above for the basis for granting the exemption for TS 1.2.1.

Based on the technical information provided in the exemption request, and the reasons provided above, the staff finds that there is reasonable assurance the applicant meets the shielding and dose requirements of 10 CFR Part 72 and 10 CFR Part 20.

2.3.4 Conclusions Regarding Use of Shielding Analysis for Future Applications

The staff's review of OPPD's application identified several statements with which the staff does not agree. These areas of disagreement are documented in this section of the SER to clearly identify these areas and to ensure that these statements are not referenced in future applications or 10 CFR 72.48 evaluations as areas where OPPD or TN have gained prior approval from the NRC staff. These areas of disagreement do not impact the staff's ability to conclude that by granting the exemption OPPD meets the shielding and dose requirements of 10 CFR Part 72 and 10 CFR Part 20.

The staff does not agree with the following statement on page 9 of Attachment 1 of the exemption request: "As a result, the shielding evaluation results reported in Chapter M.5 of the updated FSAR remain bounding and ALARA principles will be met." Chapter M.5 of the FSAR includes evaluations for the OS197 and OS197H TCs (for ease of discussion, only the OS197 TC will be referred to in this report), which both have significantly more shielding than the OS197L TC. The staff agrees that the fuel FCS proposes to transfer in the OS197L TC is bounded by the fuel in Chapter M.5 of the updated FSAR. However, due to the reduced shielding of the OS197L TC, the surface dose rates of the OS197L TC loaded with 11.0 kW fuel are greater than the surface dose rates of the OS197 TC loaded with 24 kW fuel. Therefore, the staff does not agree that the shielding evaluation in Chapter M.5 of the updated FSAR, which assumes 24 kW fuel loaded in the OS197 TC, is bounding for the OS197L TC loaded with 11 kW fuel. The staff notes that, with the combination of remote operations and the use of supplemental shielding in the decontamination area and on the transfer trailer, FCS will be performing operations involving the OS197L TC as much in keeping with ALARA principles as is possible.

The staff also does not agree with the applicant's assertion that TS 1.2.11 limit (a) exists for identifying a misload and that limit (b) exists for ALARA purposes. The staff has not seen evidence that the objectives of the TS are partitioned between the different limits. However, the applicant has demonstrated that the appropriate procedures will be in place to identify a misload and to maintain doses ALARA.

The supplemental shielding used in the decontamination area and on the transfer trailer is not part of the OS197L TC. Therefore, the staff does not agree with the applicant's assertion at the bottom of page 14 of Attachment 1 to the exemption request: "The radial shielding of the OS197L TC, including the decon area sleeve/bell, is documented in FCN 321, Rev. 1 [Attachment 1 of OPPD's exemption request], showing that the OS197L TC system

configuration has increased shielding." In fact, the OS197L TC has significantly decreased shielding as compared to the OS197 TC.

In general, due to the potential for high dose rates in the vicinity of the TC during off-normal operations (if that condition were to occur when the TC was not within either of the supplemental shields), the staff concludes that the OS197L TC is not an optimum solution from a shielding and dose perspective. However, the staff recognizes the constraints placed upon the applicant and agrees that with the revised TS, the planned use of remote operations when the TC is outside of the supplemental shielding, and adherence to the radiation protection provisions included in the operating procedures in section M.8.1 of the FSAR the applicant is meeting the ALARA objective of TS 1.2.11.

In OPPD's justification associated with the exemption request for TS 1.2.17a, OPPD includes a shielding evaluation on page 17 of Attachment 1 of the exemption request. OPPD asserts that the shielding results in Chapter M. 5 of the updated FSAR remain bounding. As described above, the staff does not agree with this assertion.

The "Radiation Protection" section on page 18 of Attachment 1 to the exemption request states that the occupational exposure and off-site dose evaluations presented in Chapter M.10 of the updated FSAR remain bounding for FCS' proposed use of the OS197L TC. The staff agrees that the occupational exposure evaluation remains bounding as long as all planned remote operations are actually performed remotely and the OS197L TC is within supplemental shielding during all personnel operations that occur near the TC. The staff notes that the dose evaluation in Chapter M.10 of the updated FSAR only addresses normal conditions. Should any remote operations fail such that, for instance, manual crane operation is necessary, or if any personnel would need to work within the vicinity of the OS197L TC when it is outside of the supplemental shielding, the occupational exposure doses are likely to exceed the doses presented in Chapter M.10.

The off-site dose evaluations presented in Chapter M.10 of the updated FSAR only address off-site doses from the HSM, and do not address contributions from the movement of the transfer trailer. While the staff agrees that the evaluations in Chapter M.10 are bounding while the fuel is in the HSM, the staff cannot make a determination that the evaluations in Chapter M.10 are bounding while the fuel is on the transfer trailer. However, based on the bounding dose rates presented in Table 10 of TN calculation no. 1121-0505 (reference 7 of Attachment 1 of OPPD's application), the staff has reasonable assurance that the limits of 10 CFR 72.104 will not be exceeded during transfer of the OS197L TC from the spent fuel pool building to the HSM.

The "Accident Analysis" section on page 18 of Attachment 1 to the exemption request states that the accident analysis in Chapter M.11 of the updated FSAR, along with the analysis in Appendix W, is bounding for the OS197L TC (light weight TC). The accident analysis is Chapter M.11 of the updated FSAR assumes the use of the OS197 TC which has lead to provide radiological shielding. The staff agrees that the accident analysis performed for the OS197L TC loaded with design basis (24 kW) fuel is bounding for the OS197L TC loaded with 11 kW fuel. Additionally, the staff agrees that the accident analysis for the HSM loaded with 24 kW fuel is bounding for the HSM loaded with 11 kW fuel. However, the staff notes that the accident analysis performed for the OS197 TC (TC with lead shielding) loaded with 24 kW fuel is not bounding for the OS197L TC (light weight TC) loaded with 11 kW fuel.

The staff does not agree with the statement in section 8.2 of Attachment 3 to the exemption request: "The spreadsheets are not the vital part of the current calculation but can save substantial amount of time and efforts if the current calculation being used as a basis for future analysis or adjustment\estimates of results needed due to changes in source term, shielding configuration or properties, etc." This statement has no bearing on OPPD's exemption request. The staff does not agree that the simplified spreadsheet calculations that are two-dimensional are an appropriate substitute for the more rigorous three-dimensional particle transport computer code, MCNP5. Although the simplified spreadsheet calculation results favorably compared to the MCNP5 code results in the Attachment 3 calculation, this was for only the condition analyzed in the calculation. The staff has no evidence to suggest that the two-dimensional spread sheet calculation will compare favorably with the MCNP 5 results for other changes to source terms, shielding configurations, or properties. Therefore, in approving OPPD's exemption request, the staff is excepting section 8.2 of Attachment 3 of OPPD's exemption request. The staff is also excepting any other section containing either the same or a similar statement (e.g., Attachment 1 of OPPD's exemption provides references that have similar statements specifically section 8.3 of reference 3, "TN Calculation NUHO06L-0502, Revision 0, OS197/OS197L Transfer Cask Shielding Evaluation for Single Assembly Misloading" and section 9.3 of reference 7, "TN Calculation 1121-0505, Revision 0, OS197L 75 Ton Bare Transfer Cask Dose Rates for as Loaded Configuration to be Used With OPPD Exemption Request").

2.4 Structural Evaluation

OPPD's exemption request did not include an exemption in the structural area because TN's 10 CFR 72.48 evaluation determined that prior NRC approval to changes made in this area was not necessary. The staff did ask a question regarding the 10 CFR 72.48 evaluation in the structural area. Specifically, in a letter dated June 27, 2006, the staff stated in RAI-4 that OPPD should justify why the trailer shielding's impact on the structural response of the TC is not considered as creating the possibility for an accident of a different type than any previously evaluated in the updated FSAR and thus require prior NRC approval in accordance with 10 CFR 72.48(c)(2)(v).

In its July 3, 2006, response to RAI-4 OPPD provided justification for why it believed prior NRC approval was not needed. OPPD states that the conservatively postulated cask drop scenarios evaluated within the updated FSAR provide the appropriate bounding accident definition and evaluation consistent with 10 CFR 72.48(c)(2)(v) and NEI 96-07, Appendix B, "Guidelines for 10 CFR 72.48 Evaluations." The NRC endorses the guidance contained in NEI 96-07 in Regulatory Guide 3.72, "Guidance for Implementation of 10 CFR 72.48 Changes, Tests, and Experiments."

OPPD maintains that the 80-inch unrestricted drop analysis provided in the updated FSAR bounds accidents involving the transfer trailer shielding. The following two scenarios involving the transfer trailer shielding were addressed in the RAI and in OPPD's RAI response: 1) dropping of the 3-inch thick trailer outer top shield on the transfer cask, and 2) the impact the additional transfer trailer shielding would have on the 80-inch unrestricted drop analysis discussed in the updated FSAR.

Regarding the first issue, the lift of the 2.5-inch thick inner top trailer shielding is performed inside the auxiliary building using the single-failure-proof crane. Because of the use of a single-

failure-proof crane, dropping of the 2.5-inch thick trailer shielding does not have to be postulated. However, the 3-inch thick outer trailer top shield is placed using a non-single failure proof crane outside of the auxiliary building. OPPD states that the lift height of the 3-inch thick shielding will be administratively limited by procedure. In the response to RAI-4, OPPD evaluates the dropping of the 3-inch thick outer top shield and concludes that if it did drop it would contact the 2.5-inch thick inner top shielding and the load would be transferred directly to the skid/trailer, and then into the four 75-ton trailer jacks. OPPD maintains that the TC would not be affected by such a drop and the dropping of the 3-inch thick shielding is bounded by the updated FSAR evaluation of an 80-inch unrestricted drop of the TC. The staff agrees that the 80-inch drop analysis bounds the dropping of the 3-inch thick trailer outer top shield and therefore, dropping of the 3-inch thick shielding does not create the possibility of a new accident that requires prior NRC approval.

Regarding the impact that the transfer trailer shielding would have on the 80-inch unrestriced drop analysis, OPPD committed to adding a discussion through a FCS specific 72.212 evaluation prior to fuel handling. This discussion would be added to section W.11.1.3 of the updated FSAR and provides reasons for why any inclusion of additional structures, such as the skid, trailer, or shielding will only reduce the drop distance and will provide additional energy absorption, thus reducing the DSC g-levels in the analyzed 80-inch unrestricted drop analysis. The staff agrees that it is appropriate to add this discussion to the updated FSAR and also agrees with the conclusion that the 80-inch unrestricted drop analysis bounds accidents involving the transfer trailer shielding. The staff concludes that the transfer trailer shielding, therefore, does not create the possibility of a new accident that requires prior NRC approval.

3.0 CONCLUSION

The staff reviewed the analyses provided by OPPD in the exemption request, as supplemented, to allow changes to the TC dose rate measurements, an earlier start time for vacuum drying and the use of a method of thermal analysis that is a departure from the methodology described in the Standardized NUHOMS® updated FSAR. Based on the foregoing considerations, the staff has determined that granting the proposed exemption from the provisions of 10 CFR 72.48(c)(2)(viii), 72.212(a)(2), 72.212(b)(2)(i)(A), 72.212(b)(7), and 10 CFR 214 is authorized by law, will not endanger life or property or the common defense and security, and is otherwise in the public interest. Accordingly, the requested exemption is acceptable subject to the following conditions:

1) OPPD will be limited to loading a total of four 32PT DSCs.

2) OPPD shall limit the decay heat level per DSC to 11 kW to ensure cask loadings are bounded by the analyses supporting the TN CoC No. 1004, Amendment No. 8.

3) OPPD shall limit the cooling time of the fuel that it intends to load to a minimum of 16.2 years to ensure that the radiological source term for fuel that is loaded in the light weight TC is kept as low as reasonably achievable.

4) The TS 1.2.11 dose rate limit/specification are substituted with the limit of 170 mrem/hr in the axial direction and 110 mrem/hr in the radial direction. The axial dose rate limit of

170 mrem/hr is to be taken under the conditions in Table 1 of this SER and the radial dose rate limit of 110 mrem/hr is to be taken under the conditions in Table 2 of this SER.

Issued with exemption on July 19, 2006.