TOPIC: 191001
KNOWLEDGE: K1.01 [3.3/3.4]
QID: P901

Which one of the following describes the function of a safety valve?

A. Provide overpressure protection to limit the internal pressure in vessels

B. Control pressure in a system to maintain optimum operational conditions

C. Sound a warning by lifting at a predetermined value slightly higher than operating pressure

D. Modulate open as necessary to maintain system pressure and/or temperature within normal limits

ANSWER: A.

TOPIC: 191001
KNOWLEDGE: K1.01 [3.3/3.4]
QID: P1802 (B1701)

A vertical safety valve has a compressed spring assembly that is applying 1,200 lbf to the top of the valve disk in opposition to system pressure. System pressure is being exerted on the underside of the valve disk that is 3 inches in diameter.

Which one of the following is the approximate system pressure at which the safety valve will open? (Ignore any effects from atmospheric pressure.)

A. 44 psi

B. 64 psi

C. 128 psi

D. 170 psi

ANSWER: D.

TOPIC: 191001
KNOWLEDGE: K1.01 [3.3/3.4]
QID: P1903 (B2003)

A vertical safety valve with a 3-inch diameter disk has a compressed spring applying 1,000 lbf to the top of the valve disk in opposition to system pressure. Which one of the following is the approximate system pressure at which the safety valve will open? (Neglect the effect of atmospheric pressure.)

A. 35 psi

B. 111 psi

C. 142 psi

D. 444 psi

ANSWER: C.

TOPIC: 191001
KNOWLEDGE: K1.01 [3.3/3.4]
QID: P2101 (B2103)

Refer to the drawing of a typical safety valve (see figure below).

The component indicated by the solid arrow is used when necessary to manually...

A. rachet open the safety valve.

B. pop open the safety valve.

C. gag shut the safety valve.

D. determine the position of the safety valve.

ANSWER: B.

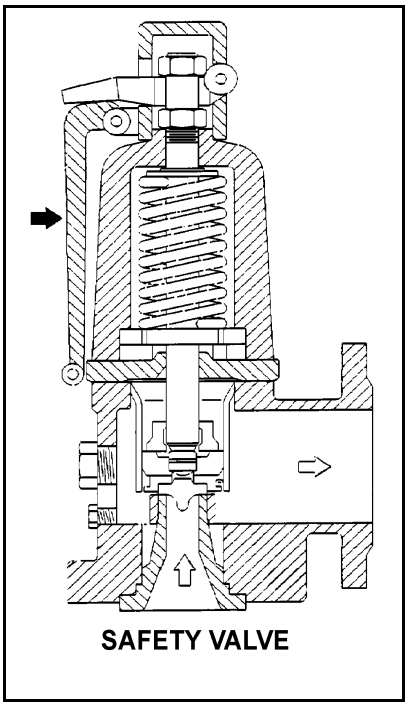

TOPIC: 191001
KNOWLEDGE: K1.01 [3.3/3.4]
QID: P2301 (B2301)

A vertical safety valve has a compressed spring assembly that is applying 2,500 lbf to the top of the valve disk in opposition to system pressure. System pressure is being exerted on the underside of the valve disk that is 5 inches in diameter.

Which one of the following is the approximate system pressure at which the safety valve will open? (Neglect the effect of atmospheric pressure.)

A. 32 psi

B. 127 psi

C. 159 psi

D. 500 psi

ANSWER: B.

TOPIC: 191001
KNOWLEDGE: K1.01 [3.3/3.4]
QID: P2801 (B2803)

A vertical safety valve with a 2-inch diameter disk has a compressed spring applying 2,400 lbf to the top of the valve disk in opposition to system pressure. Which one of the following is the approximate system pressure at which the safety valve will open?

A. 95 psig

B. 191 psig

C. 382 psig

D. 764 psig

ANSWER: D.

TOPIC: 191001
KNOWLEDGE: K1.01 [3.3/3.4]
QID: P3401 (B3401)

Given the following pressure specifications for operation of a main steam safety valve (MSSV):

Setpoint pressure (MSSV starts to open):	1,200 psia
Maximum pressure (MSSV will be fully open):	1,230 psia
Reseat pressure (MSSV will be fully closed):	1,140 psia

Which one of the following is the percent blowdown for the MSSV?

A. 2.5%

B. 5.0%

C. 7.5%

D. 10.0%

ANSWER: B.

TOPIC: 191001
KNOWLEDGE: K1.01 [3.3/3.4]
K1.02 [3.0/3.3]
QID: P4201 (B4201)

A completely full water storage tank is being hydrostatically tested to 100 psig using a positive displacement pump (PDP) with a smooth and constant discharge flow rate of 10 gpm. The tank is protected by a safety valve <u>and</u> a relief valve; both valves will discharge to the atmosphere. Each valve has an opening setpoint of 105 psig and a maximum rated discharge flow rate of 6 gpm. The PDP is inadvertently left running when tank pressure reaches 100 psig.

With the PDP still running, tank pressure will stabilize _____ 105 psig; the greater mass flow rate will be coming from the _____ valve.

A. at; safety

B. above; safety

C. at; relief

D. above; relief

ANSWER: B.

TOPIC: 191001
KNOWLEDGE: K1.01 [3.3/3.4]
QID: P4401 (B4401)

Given the following pressure specifications for a main steam safety valve (MSSV):

Setpoint pressure (MSSV will start to open): 1,200 psia
Maximum pressure (MSSV will be fully open): 1,242 psia
Reseat pressure (MSSV will be fully closed): 1,152 psia

Which one of the following is the percent accumulation for this MSSV?

A. 2.5%

B. 3.0%

C. 3.5%

D. 4.0%

ANSWER: C.

TOPIC: 191001
KNOWLEDGE: K1.01 [3.3/3.4]
K1.02 [3.0/3.3]
QID: P4701 (B4701)

A completely full water storage tank is being hydrostatically tested to 200 psig using a positive displacement pump (PDP) with a smooth and constant discharge flow rate of 8 gpm. The tank is protected by a relief valve <u>and</u> a safety valve; both valves discharge to the atmosphere. Each valve has an opening setpoint of 205 psig and a maximum rated discharge flow rate of 6 gpm. The PDP is inadvertently left running when tank pressure reaches 200 psig.

With the PDP still running, when conditions stabilize the relief valve will be _____ open; and the safety valve will be discharging approximately _____ to atmosphere.

A. partially; 6 gpm

B. partially; 2 gpm

C. fully; 6 gpm

D. fully; 2 gpm

ANSWER: A.

TOPIC: 191001
KNOWLEDGE: K1.01 [3.3/3.4]
K1.02 [3.0/3.3]
QID: P5201 (B5201)

Refer to the drawing of two identical water storage tanks (see figure below). Tank A is protected by a relief valve and Tank B is protected by a safety valve. Each valve has an opening setpoint of 205 psig and a maximum rated discharge flow rate of 8 gpm.

The tanks are being hydrostatically tested to 200 psig. Each tank is being supplied with a smooth and constant flow rate of 2 gpm from separate positive displacement pumps (PDPs). Both PDPs are inadvertently left running when tank pressures reach 200 psig.

With the PDPs running continuously, what will be the resulting status of the relief and safety valves?

	Relief Valve Status	Safety Valve Status
A.	Partially open	Partially open
B.	Partially open	Cycling between fully open and fully closed
C.	Cycling between fully open and fully closed	Partially open
D.	Cycling between fully open and fully closed	Cycling between fully open and fully closed

ANSWER: B.

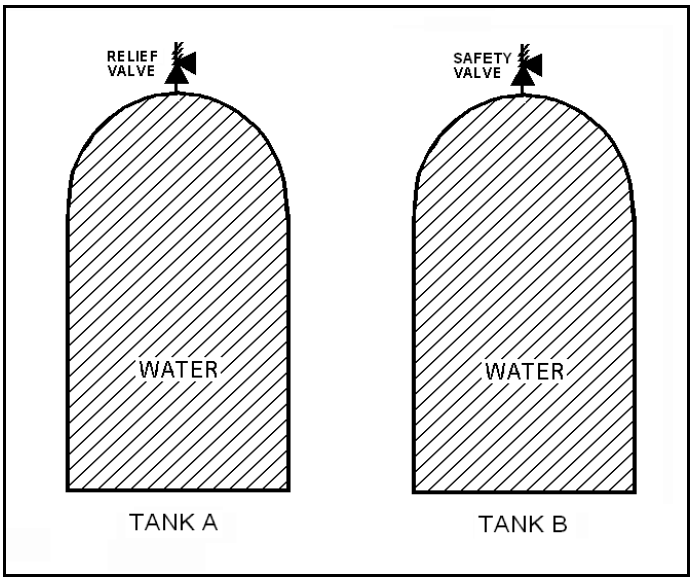

TOPIC: 191001
KNOWLEDGE: K1.02 [3.3/3.4]
QID: P1

The primary purpose of a pressure relief valve is to...

A. reduce system energy.

B. reduce system pressure.

C. maintain system integrity.

D. maintain system mass.

ANSWER: C.

TOPIC: 191001
KNOWLEDGE: K1.02 [3.0/3.3]
QID: P202 (B301)

The difference between the set point pressure at which a safety valve opens and the pressure at which it closes is called...

A. blowdown.

B. accumulation.

C. set point tolerance.

D. set point deviation.

ANSWER: A.

TOPIC: 191001
KNOWLEDGE: K1.02 [3.0/3.3]
QID: P501 (B201)

The difference between the setpoint pressure at which a relief valve begins to open and the pressure at which it is fully open is called...

A. setpoint deviation.

B. setpoint tolerance.

C. accumulation.

D. blowdown.

ANSWER: C.

TOPIC: 191001
KNOWLEDGE: K1.02 [3.0/3.3]
QID: P1504 (B1801)

Which one of the following is a difference between a typical relief valve and a typical safety valve?

A. The actuator closing spring on a relief valve is in a compressed state whereas the actuator closing spring on a safety valve acts in tension.

B. A relief valve gradually opens as pressure increases above the setpoint pressure whereas a safety valve fully opens at the setpoint pressure.

C. Relief valves are capable of being gagged whereas safety valves are <u>not</u>.

D. The blowdown of a relief valve is greater than the blowdown of a safety valve.

ANSWER: B.

TOPIC: 191001
KNOWLEDGE: K1.02 [3.0/3.3]
QID: P1801 (B1301)

Refer to the drawing of two identical pressure vessels with identical relief valve protection (see figure below).

Both vessels have been pressurized to 50 psig and then isolated. Vessel A is completely filled with water at 150°F. Vessel B is in a saturated condition with one-half steam (100% quality) and one-half water (0% quality) by volume.

If both relief valves fully open simultaneously, the faster pressure reduction will occur in vessel _____; and if both relief valves close at 40 psig, the greater mass loss will have occurred in vessel _____.

A. A; A

B. A; B

C. B; A

D. B; B

ANSWER: B.

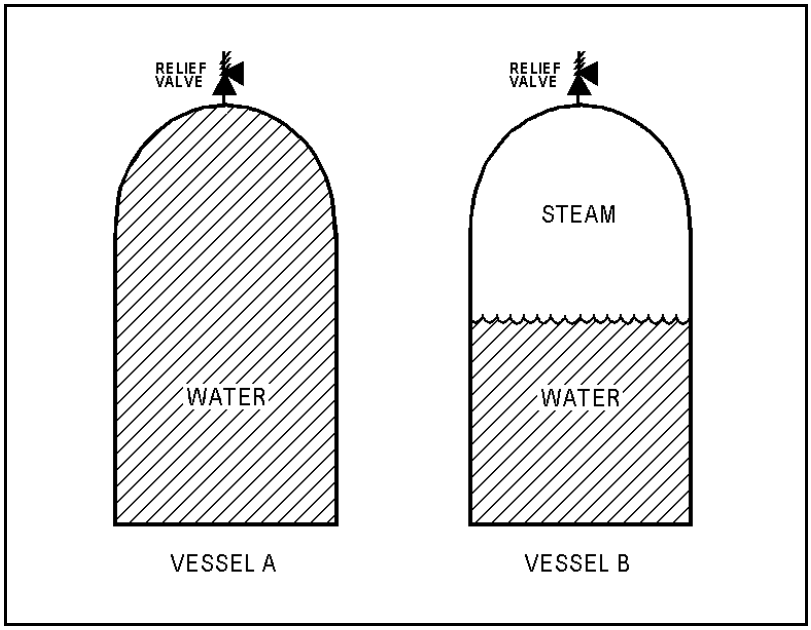

TOPIC: 191001
KNOWLEDGE: K1.02 [3.0/3.3]
QID: P2501 (B2501)

Water storage tanks A and B are identical except that tank A receives overpressure protection from an installed relief valve, whereas tank B has an installed safety valve. The relief valve and safety valve have the same pressure setpoint and design flow rate.

Water is continuously added to each tank at the same rate (50% of the design flow rate of the relief/safety valve). After the tanks are completely full, tank A pressure will _____; and tank B pressure will _____.

A. stabilize slightly above the pressure setpoint; stabilize slightly above the pressure setpoint

B. stabilize slightly above the pressure setpoint; fluctuate within a few percent of the pressure setpoint

C. fluctuate within a few percent of the pressure setpoint; stabilize slightly above the pressure setpoint

D. fluctuate within a few percent of the pressure setpoint; fluctuate within a few percent of the pressure setpoint

ANSWER: B.

TOPIC: 191001
KNOWLEDGE: K1.02 [3.0/3.3]
QID: P2701 (B2701)

Vessels A and B are identical except that vessel A receives overpressure protection from an installed safety valve. Vessel B has an installed relief valve. The safety and relief valves have the same pressure setpoint and design flow rate.

Water is continuously added to each vessel at the same rate (50% of the design flow rate of the safety and relief valves). After vessel pressure reaches the setpoint for each valve, vessel A pressure will _____ and vessel B pressure will _____.

A. stabilize slightly above the pressure setpoint; stabilize slightly above the pressure setpoint

B. stabilize slightly above the pressure setpoint; fluctuate within a few percent of the pressure setpoint

C. fluctuate within a few percent of the pressure setpoint; stabilize slightly above the pressure setpoint

D. fluctuate within a few percent of the pressure setpoint; fluctuate within a few percent of the pressure setpoint

ANSWER: C.

TOPIC: 191001
KNOWLEDGE: K1.02 [3.4/3.6]
QID: P3302 (B2)

Refer to the drawing of two identical pressure vessels with identical relief valve protection (see figure below).

Vessel A is completely filled with subcooled water at 80°F and vessel B is in a saturated, two-phase condition. Both vessels are currently pressurized to 50 psig and isolated.

If both relief valves fully open simultaneously, the faster pressure reduction will initially occur in vessel _____ and the faster mass loss will initially occur in vessel _____.

A. A; A

B. A; B

C. B; A

D. B; B

ANSWER: A.

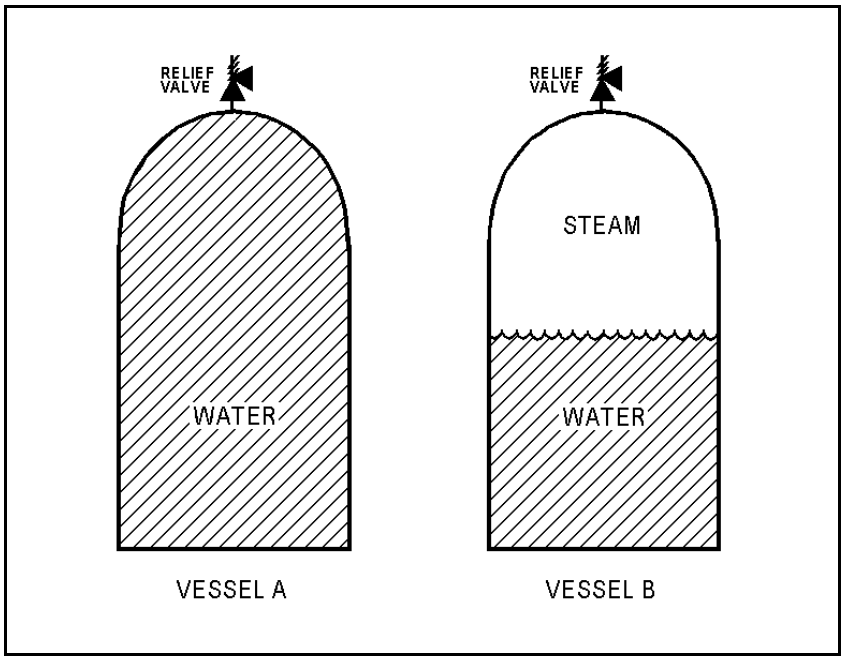

TOPIC: 191001
KNOWLEDGE: K1.03 [2.7/2.9]
QID: P2

When a discharge valve is opened to atmosphere, the pressure on the upstream side of the valve will...

A. remain the same, and the pressure on the downstream side will increase.

B. increase, and the pressure on the downstream side will remain the same.

C. remain the same, and the pressure on the downstream side will decrease.

D. decrease, and the pressure on the downstream side will remain the same.

ANSWER: D.

TOPIC: 191001
KNOWLEDGE: K1.03 [2.7/2.9]
QID: P602 (B2005)

When comparing a globe valve and a gate valve in the same application, the gate valve has a _____ pressure drop when fully open and is the _____ choice for throttling.

A. higher; better

B. lower; better

C. higher; poorer

D. lower; poorer

ANSWER: D.

TOPIC: 191001
KNOWLEDGE: K1.03 [2.7/2.9]
QID: P1201 (B2101)

Refer to the drawing of a lube oil heat exchanger (see figure below).

If a cooling water outlet valve is partially closed from the full open position, heat exchanger cooling water pressure upstream of the valve will _____ and the temperature of the lube oil exiting the heat exchanger will _____.

A. increase; decrease

B. increase; increase

C. decrease; decrease

D. decrease; increase

ANSWER: B.

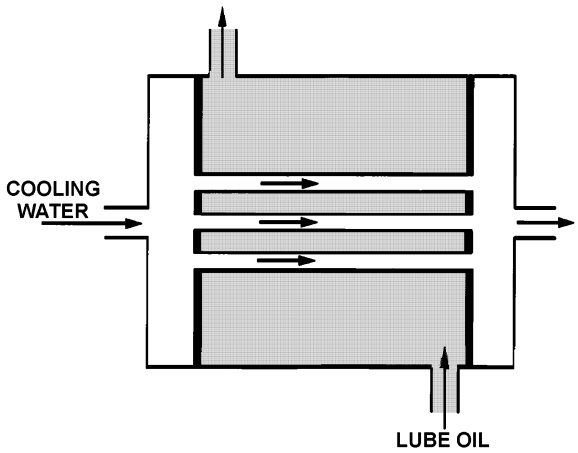

LUBE OIL HEAT EXCHANGER

TOPIC: 191001
KNOWLEDGE: K1.03 [2.7/2.9]
QID: P1302 (B1505)

When comparing a 3-inch gate valve to a 3-inch globe valve in the same application in an operating cooling water system, if both valves are fully open, the gate valve produces the _____ head loss and the _____ flow rate.

A. smaller; larger

B. smaller; smaller

C. larger; larger

D. larger; smaller

ANSWER: A.

TOPIC: 191001
KNOWLEDGE: K1.03 [2.7/2.9]
QID: P2102 (B2101)

Which one of the following statements describes the flow rate characteristics of a typical gate valve in an operating water system?

A. The first 25% of valve disk travel in the open direction will produce a smaller change in flow rate than the last 25% of valve disk travel.

B. The first 25% of valve disk travel in the open direction will produce a greater change in flow rate than the last 25% of valve disk travel.

C. The first 25% of valve disk travel in the open direction will produce approximately the same change in flow rate as the last 25% of valve disk travel.

D. A gate valve that has been opened to 25% of valve disk travel will result in approximately 25% of full flow rate.

ANSWER: B.

TOPIC: 191001
KNOWLEDGE: K1.03 [2.7/2.9]
QID: P2302 (B2601)

Which one of the following statements describes the flow rate characteristics of a typical globe valve in an operating water system?

A. The first 25% of valve disk travel in the open direction will produce a smaller change in flow rate than the last 25% of valve disk travel.

B. The first 25% of valve disk travel in the open direction will produce a greater change in flow rate than the last 25% of valve disk travel.

C. The first 25% of valve disk travel in the open direction will produce approximately the same change in flow rate as the last 25% of valve disk travel.

D. A globe valve that has been opened to 25% of valve disk travel will result in approximately 25% of full flow rate.

ANSWER: B.

TOPIC: 191001
KNOWLEDGE: K1.03 [2.7/2.9]
QID: P2303 (B2303)

A control valve is most likely to experience cavitation when the valve is almost fully _____ because of a relatively _____ pressure drop across the valve seat.

A. open; large

B. open; small

C. closed; large

D. closed; small

ANSWER: C.

TOPIC: 191001
KNOWLEDGE: K1.03 [2.7/2.9]
QID: P3001 (B3002)

Which one of the following statements describes the throttling characteristics of a typical globe valve?

A. The first third of valve disk travel in the open direction will result in approximately one-third of full flow rate.

B. The first third of valve disk travel in the open direction will produce a smaller increase in flow rate than the last third of valve disk travel.

C. The first third of valve disk travel in the open direction will produce a greater increase in flow rate than the last third of valve disk travel.

D. The first two-thirds of valve disk travel in the open direction will produce approximately the same increase in flow rate as the last third of valve disk travel.

ANSWER: C.

TOPIC: 191001
KNOWLEDGE: K1.03 [2.7/2.9]
QID: P3901 (B3902)

Refer to the drawing of a cooling water system in which both centrifugal pumps A and B are operating (see figure below).

An operator stops pump B, but the pump B check valve fails to close. In comparison to normal operation with only pump A running, operation with the failed pump B check valve will result in pump A flow rate being _____ than normal; and heat exchanger flow rate being _____ than normal.

A. higher; lower

B. higher; higher

C. lower; lower

D. lower; higher

ANSWER: A.

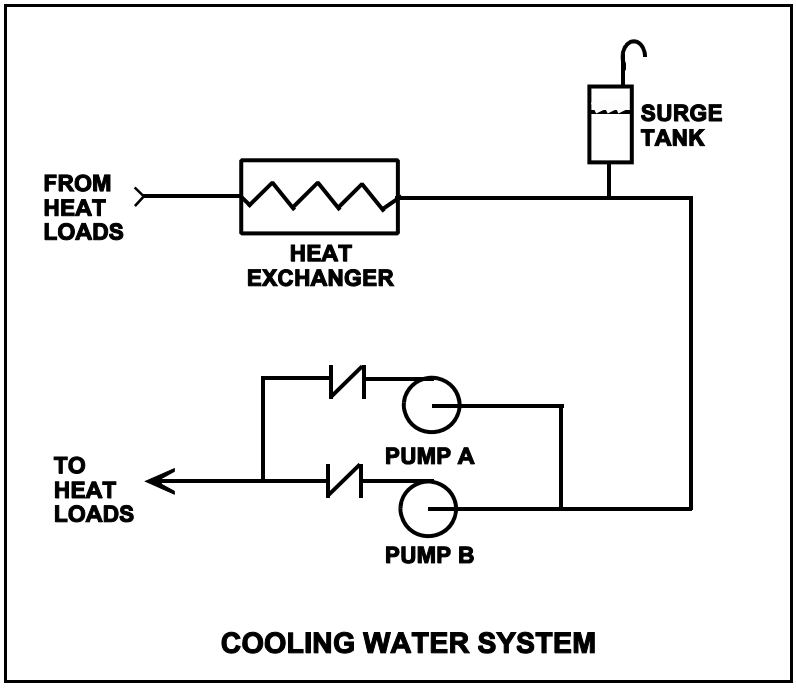

TOPIC: 191001
KNOWLEDGE: K1.03 [2.7/2.9]
QID: P4101 (B4103)

Which one of the following types of similarly sized valves in an operating water system produces the least frictional head loss when fully open?

A. Ball

B. Globe

C. Butterfly

D. Swing check

ANSWER: A.

TOPIC: 191001
KNOWLEDGE: K1.03 [2.7/2.9]
QID: P4801 (B4802)

Refer to the centrifugal pump operating curve with two system head loss curves (see figure below). The curves apply to an open cooling water system using one single-speed centrifugal pump discharging through a typical flow control valve. The valve is located on the discharge piping of the pump.

One of the system curves shows system head loss with the flow control valve 25% open. The other system curve shows system head loss with the flow control valve 100% open. The pump is operating and the valve is initially 25% open, resulting in a pump flow rate of 800 gpm.

If the flow control valve is subsequently fully opened, pump flow rate through the valve will be approximately...

A. 400 gpm.

B. 1,200 gpm.

C. 1,600 gpm.

D. 3,200 gpm.

ANSWER: B.

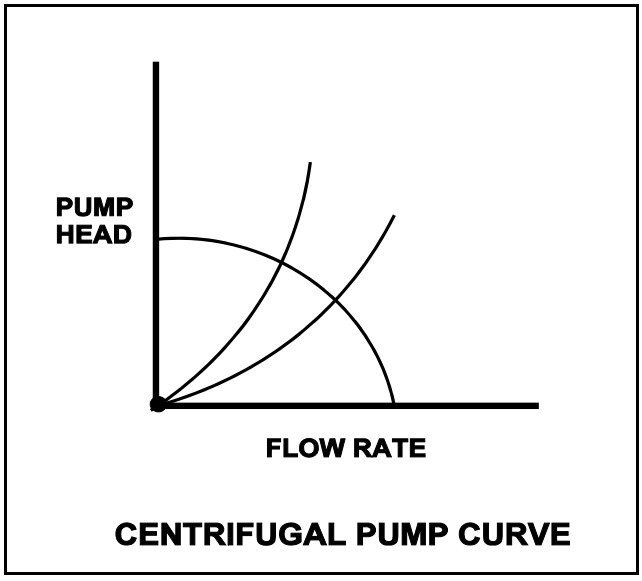

TOPIC: 191001
KNOWLEDGE: K1.03 [2.7/2.9]
QID: P4901 (B4901)

Consider a 6-inch globe valve and a 6-inch gate valve in the same water system application. Typically, the valve that requires the most linear disk travel from fully closed to fully open is the _____ valve; and the valve that produces the smallest pressure drop when fully open is the _____ valve.

A. gate; gate

B. gate; globe

C. globe; gate

D. globe; globe

ANSWER: A.

TOPIC: 191001
KNOWLEDGE: K1.04 [2.8/3.2]
QID: P101 (B1903)

Refer to the drawing of a spring-loaded air-operated valve (see figure below).

Upon a loss of air pressure, this valve will...

A. go to the fully open position.

B. remain at the current position.

C. go to the fully closed position.

D. go to the midposition.

ANSWER: C.

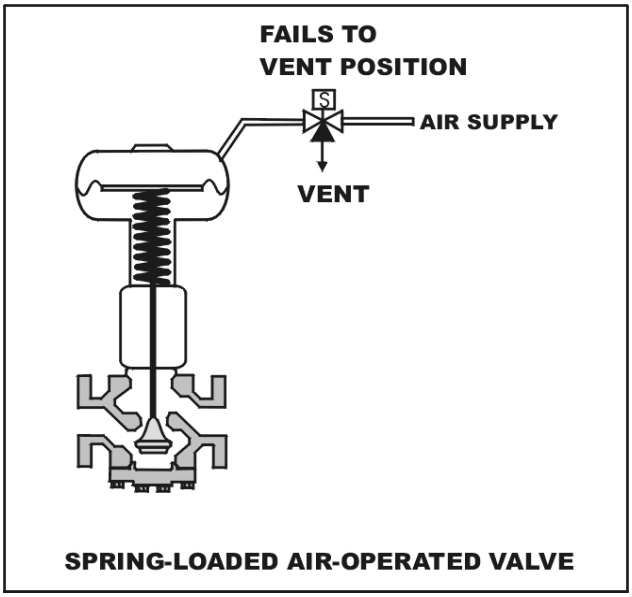

TOPIC: 191001
KNOWLEDGE: K1.04 [2.8/3.2]
QID: P112 (B1401)

Using the drawing of an air-operated valve (see figure below), identify the valve position following a loss of electrical power.

A. Midposition

B. Closed

C. As is

D. Open

ANSWER: B.

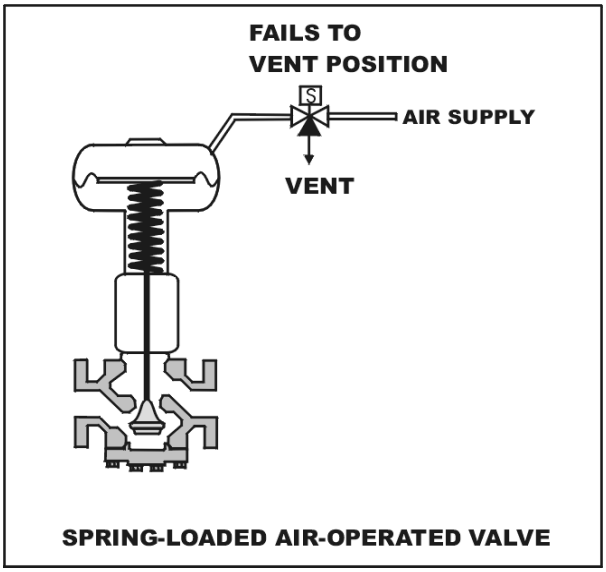

TOPIC: 191001
KNOWLEDGE: K1.04 [2.8/3.2]
QID: P203 (B502)

Refer to the drawing of a hydraulically-operated valve that is shown in a throttled position (see figure below).

Select the position of this valve following a loss of hydraulic system pressure.

A. Fully open

B. As is

C. Fully closed

D. Midposition

ANSWER: A.

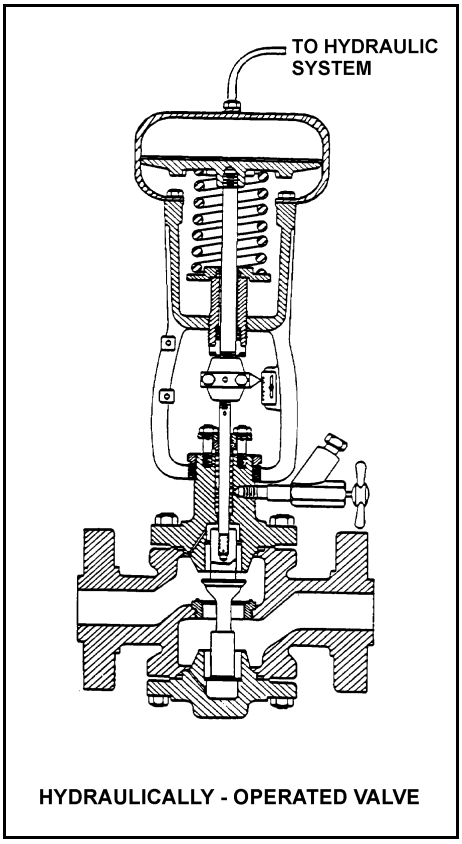

TOPIC: 191001
KNOWLEDGE: K1.04 [2.8/3.2]
QID: P1101 (B1109)

Refer to the drawing of a spring-loaded air-operated valve shown in a throttled position (see figure below).

The figure currently depicts normal air supply pressure and an energized solenoid. What will be the valve position following a loss of electrical power to the solenoid?

A. As is

B. More open

C. More closed

D. Varies with system flow

ANSWER: B.

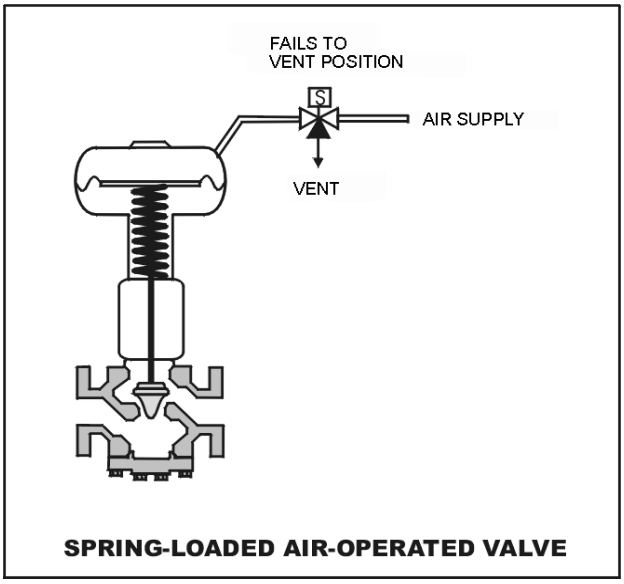

TOPIC: 191001
KNOWLEDGE: K1.04 [2.8/3.2]
QID: P1202 (B602)

How will a typical motor-operated valve respond to a loss of electrical power to the valve actuator?

A. Open fully

B. Close fully

C. Remain as is

D. Move to 50% open

ANSWER: C.

TOPIC: 191001
KNOWLEDGE: K1.04 [2.8/3.2]
QID: P2104 (B1002)

Refer to the drawing of a spring-loaded air-operated valve shown in a throttled position (see figure below).

Which one of the following will be the valve position following a reduction in air pressure to the valve actuator caused by a leaking air connection at the valve?

A. Original position

B. More closed

C. More open

D. Varies with system flow

ANSWER: B.

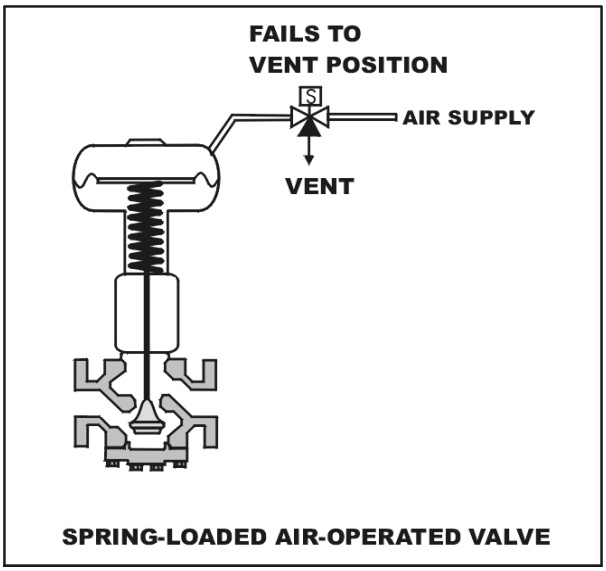

TOPIC: 191001
KNOWLEDGE: K1.04 [2.8/3.2]
K1.08 [3.4/3.4]
QID: P5002 (B5002)

Refer to the drawing of a pneumatically-operated valve (see figure below). The valve actuator may be shown with or without air pressure applied to it.

Which one of the following describes the type of valve shown, and the fail position on loss of air to the actuator?

	Valve Type	Fail Position
A.	Gate	Open
B.	Gate	Closed
C.	Globe	Open
D.	Globe	Closed

ANSWER: C.

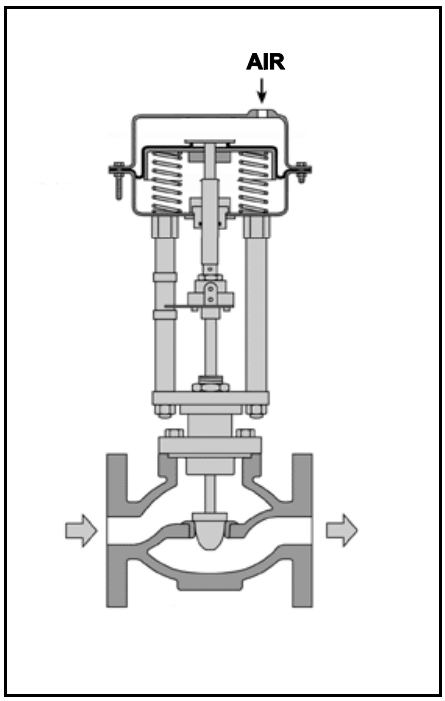

TOPIC: 191001
KNOWLEDGE: K1.04 [2.8/3.2]
KNOWLEDGE: K1.08 [3.4/3.4]
QID: P5302 (B5301)

Refer to the drawing of four air-operated valves (see figure below). **Note:** The valve actuators may be shown with or without air pressure applied.

Given:

- The direction of system flow is from left to right when the valves are open.
- The internal components for each valve are identical except for the orientation of the valve disk and seat.
- The valve actuators exert the same force on the attached valve stem for a given applied air pressure.

If each actuator is vented, which valve disk will remain closed with the most force?

A. A.

B. B.

C. C.

D. D.

ANSWER: C.

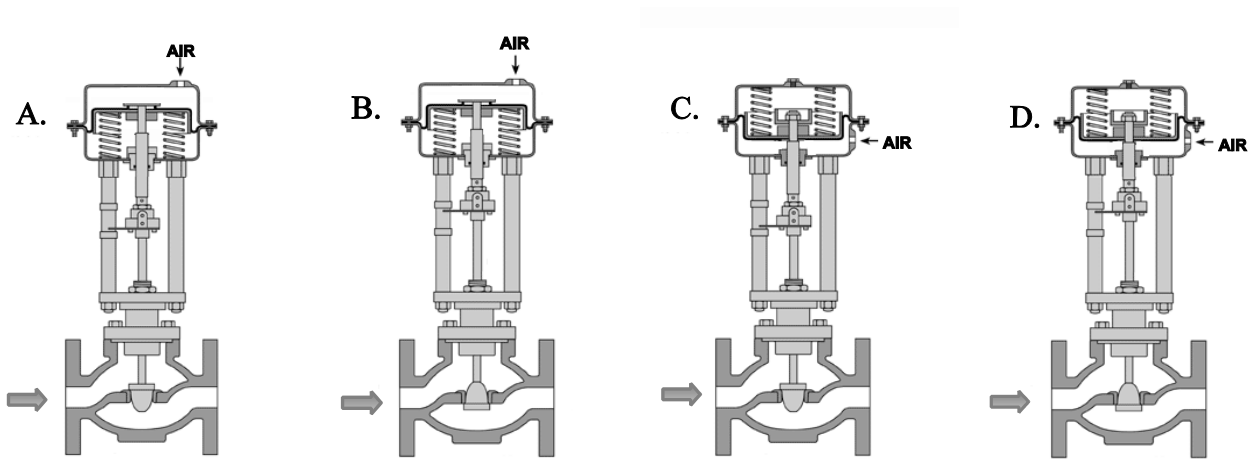

TOPIC: 191001
KNOWLEDGE: K1.04 [2.8/3.2]
QID: P5502 (B5502)

Refer to the drawing of four air-operated valves (see figure below). **Note:** The valve actuators may be shown with or without air pressure applied.

Which valves are currently shown in their failed (i.e., no air pressure applied to the actuator) positions?

A. A and B

B. B and C

C. C and D

D. D and A

ANSWER: B.

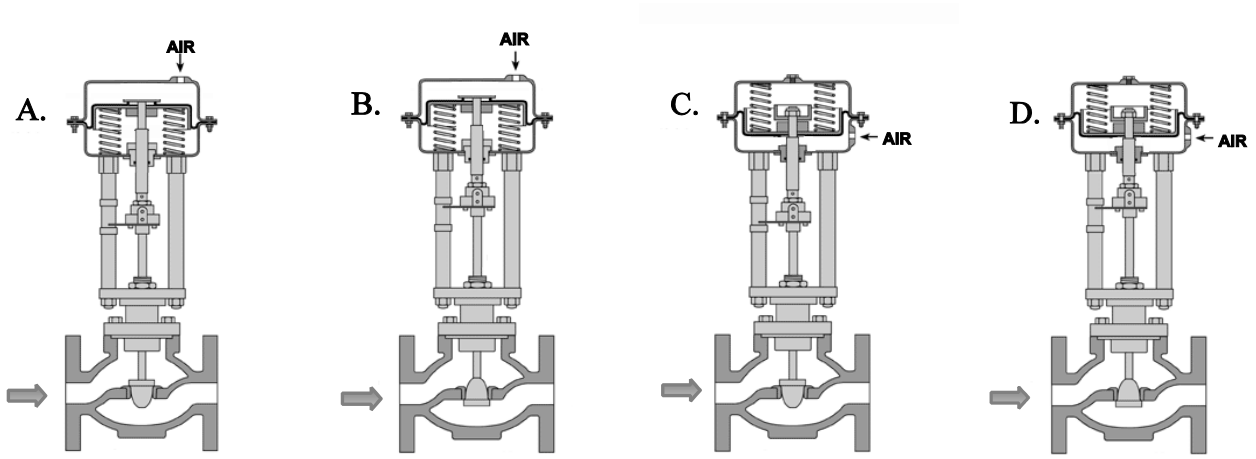

TOPIC: 191001
KNOWLEDGE: K1.05 [2.6/2.8]
QID: P201 (B206)

An operator attempts to close a fully-open upright manual gate valve to isolate a pump in a cooling water system that has been cooled down for maintenance. However, the operator is unable to rotate the handwheel in the close direction.

Which one of the following could cause this condition?

A. A hydraulic lock has developed under the valve disk.

B. A hydraulic lock has developed in the valve bonnet between the valve disk and the packing gland.

C. The two halves of the valve disk have expanded and are jammed against the valve seats.

D. The valve disk has jammed against its backseat by the difference in the thermal contraction of the stem and the bonnet.

ANSWER: D.

TOPIC: 191001
KNOWLEDGE: K1.05 [2.6/2.8]
QID: P403 (B108)

When manually positioning a motor-operated valve, why must the operator avoid using excessive valve seating/backseating force?

A. The valve may bind during subsequent operation.

B. Valve stem limit switch settings may become inaccurate.

C. The clutch may not reengage the valve motor when required.

D. Stem position may no longer be an accurate indicator of valve position.

ANSWER: A.

TOPIC: 191001
KNOWLEDGE: K1.05 [2.6/2.8]
QID: P1303 (B2802)

After an adjustment of the packing gland on a valve that had a minor packing leak, an operator attempts to operate the valve but finds that the valve is stuck. What is the most probable cause?

A. The disk separated from the valve stem as a result of overtightening the packing gland.

B. The operator placed the valve in the wrong position for adjusting the packing gland.

C. The valve was overtorqued in the closed direction during the packing gland adjustment.

D. The maintenance technician overtightened the packing gland, causing the stem to bind.

ANSWER: D.

TOPIC: 191001
KNOWLEDGE: K1.05 [2.6/2.8]
QID: P1603 (B1003)

An adjustment has just been completed on the packing gland of an automatic valve to stop a minor stem leak. Which one of the following can occur if the technician overtightened the packing gland?

A. Decreased cooling flow to the valve internals.

B. Separation of the valve disk from the valve stem.

C. Misalignment of the valve position limit switches.

D. Increased stroke time from fully open to fully closed.

ANSWER: D.

TOPIC: 191001
KNOWLEDGE: K1.05 [2.6/2.8]
QID: P1902 (B6)

Which one of the following describes the function and use of the backseat on a manual valve?

A. Removes pressure from the packing/stuffing box and is typically used to isolate the stuffing box for valve repacking.

B. Removes pressure from the packing/stuffing box and is typically used when needed to isolate packing leakage.

C. Acts as a backup in case the primary seat leaks and is typically used during system isolation for personnel protection.

D. Acts as a backup in case the primary seat leaks and is typically used when needed to prevent the primary seat from leaking excessively.

ANSWER: B.

TOPIC: 191001
KNOWLEDGE: K1.05 [2.6/2.8]
QID: P2503 (B2603)

When manually closing a motor-operated valve, why must the operator avoid using excessive valve seating force?

A. The valve may bind and cause the valve motor to trip on overload during subsequent remote operation.

B. The valve actuator clutch may be damaged and disable subsequent automatic operation.

C. The valve stem limit switches may be damaged and cause inaccurate remote valve position indication.

D. The valve actuator position indicator may be damaged and cause inaccurate local valve position indication.

ANSWER: A.

TOPIC: 191001
KNOWLEDGE: K1.05 [2.6/2.8]
QID: P3503 (B3503)

Refer to the drawing of a water supply pump with two suction sources (see figure below). All motor-operated valves (MOVs) are currently closed.

Which one of the following MOV interlocks will permit the pump to take a suction on either the building sump or the water storage tank, while preventing the two sources from being cross-connected?

A. Neither MOV-1 nor MOV-2 can be opened unless MOV-3 is fully closed.

B. None of the MOVs can be opened unless at least one MOV remains fully closed.

C. None of the MOVs can be opened unless at least two MOVs remain fully closed.

D. Neither MOV-1 nor MOV-2 can be opened unless the other source MOV is fully closed.

ANSWER: D.

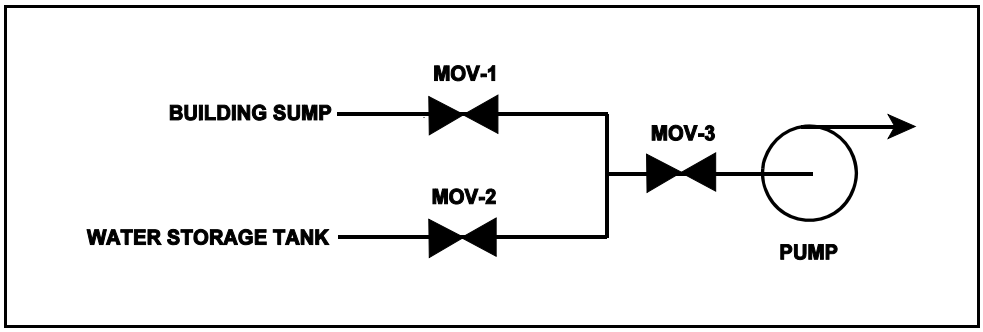

TOPIC: 191001
KNOWLEDGE: K1.06 [3.3/3.7]
QID: P4

After manually positioning a motor-operated valve, the valve actuator is reengaged by actuation of the...

A. manual declutch lever to the disengage position.

B. manual declutch lever to the engage position.

C. racked in limit switch when the actuator motor breaker is racked in.

D. valve actuator motor in the open direction.

ANSWER: D.

TOPIC: 191001
KNOWLEDGE: K1.06 [3.3/3.7]
QID: P204 (B204)

Operation of the manual declutch lever (initially in the normal position) of a motor-operated valve _____ the motor and _____ the handwheel.

A. disengages; engages

B. deenergizes; engages

C. engages; disengages

D. reenergizes; disengages

ANSWER: A.

TOPIC: 191001
KNOWLEDGE: K1.06 [3.3/3.7]
QID: P1702 (B1605)

A typical Limitorque® motor-operated valve is installed in an emergency core cooling system (ECCS) application. The ECCS actuation signal is designed to energize the valve motor and open the valve. The valve is currently open, but being manually/locally closed by a technician as required by a surveillance test procedure. The declutch lever has been operated and released, and the valve is being closed by operation of the valve handwheel.

If an ECCS actuation signal is received, how will the valve be affected?

A. The handwheel will disengage and the valve will automatically open.

B. The handwheel will disengage and the valve will remain in the current position.

C. The handwheel will remain engaged and the valve will automatically open.

D. The handwheel will remain engaged and the technician can continue to close the valve.

ANSWER: A.

TOPIC: 191001
KNOWLEDGE: K1.06 [3.3/3.7]
QID: P2003 (B2004)

A surveillance test procedure is being performed on a typical Limitorque® motor-operated valve (MOV) used in an emergency core cooling system (ECCS) application. The declutch lever has been operated and released and the valve is being manually/locally opened by a technician. The MOV breaker is closed as required by the surveillance test procedure. During operation of the valve handwheel an ECCS actuation signal is received that normally energizes the valve motor and closes the valve.

How will the valve be affected by the actuation signal?

A. The handwheel will disengage and the valve will automatically close.

B. The handwheel will disengage and the valve will remain in the current position.

C. The handwheel will remain engaged and the valve will automatically close.

D. The handwheel will remain engaged and the technician can continue to open the valve.

ANSWER: A.

TOPIC: 191001
KNOWLEDGE: K1.06 [3.3/3.7]
QID: P2703 (B2704)

A typical motor-operated valve (MOV) has just been opened from the main control room, and the breaker for the MOV has been opened. A plant operator has been directed to close the MOV locally for a surveillance test.

If the operator attempts to turn the MOV handwheel in the clockwise direction without first operating the clutch lever, which one of the following will occur?

A. The handwheel will not turn, and the valve stem will not move.

B. The handwheel will turn, but the valve stem will not move.

C. The handwheel will turn, and the valve stem will move toward the closed position because the clutch is automatically engaged when the handwheel is turned.

D. The handwheel will turn, and the valve stem will move toward the closed position because the clutch is automatically engaged when the breaker is opened.

ANSWER: B.

TOPIC: 191001
KNOWLEDGE: K1.06 [3.3/3.7]
QID: P4002 (B4003)

Which one of the following types of similarly sized valves requires the most manual valve stem rotation to move the valve from fully open to fully closed? (Assume that each valve has a non-rising stem.)

A. Ball

B. Gate

C. Plug

D. Butterfly

ANSWER: B.

TOPIC: 191001
KNOWLEDGE: K1.07 [2.5/2.8]
QID: P303 (B302)

A stop check valve is a type of check valve that...

A. cannot be shut remotely.

B. can be used to prevent flow in both directions.

C. can be opened manually to allow flow in both directions.

D. contains both a gate valve disk and a check valve disk.

ANSWER: B.

TOPIC: 191001
KNOWLEDGE: K1.07 [2.5/2.8]
QID: P503

Which one of the following valves is used to control the direction of fluid flow and prevent backflow in a system?

A. Safety valve

B. Relief valve

C. Divert valve

D. Check valve

ANSWER: D.

TOPIC: 191001
KNOWLEDGE: K1.07 [2.5/2.8]
QID: P802 (B2204)

Two common types of check valves used in nuclear power plants are...

A. globe and gate.

B. ball and plug.

C. swing and lift.

D. needle and angle.

ANSWER: C.

TOPIC: 191001
KNOWLEDGE: K1.07 [2.5/2.8]
QID: P1003 (B2903)

A typical check valve is designed to...

A. permit flow in only one direction.

B. prevent system overpressure.

C. isolate system components.

D. perform automatic pump venting.

ANSWER: A.

TOPIC: 191001
KNOWLEDGE: K1.07 [2.5/2.8]
QID: P1503 (B205)

Check valves are normally used to prevent...

A. overpressurization of nonoperating system piping and components.

B. backflow through nonoperating components or flowpaths.

C. pump runout by providing a constant backpressure.

D. pump cavitation by keeping nonoperating systems filled.

ANSWER: B.

TOPIC: 191001
KNOWLEDGE: K1.07 [2.5/2.8]
QID: P2202 (B1102)

Which one of the following valves is used to control the direction of fluid flow and prevent backflow in a system?

A. Gate valve

B. Relief valve

C. Globe valve

D. Check valve

ANSWER: D.

TOPIC: 191001
KNOWLEDGE: K1.08 [3.4/3.4]
QID: P5 (B402)

To verify a manual valve in an operating system is closed, the operator should operate the valve handwheel in the...

A. open direction until the valve is fully open, then close it using normal force.

B. open direction until flow sounds are heard, then close the valve using normal force.

C. close direction using normal force and verify there is no substantial handwheel movement.

D. close direction until it stops, then close it an additional one-half turn using additional force if necessary.

ANSWER: C.

TOPIC: 191001
KNOWLEDGE: K1.08 [3.4/3.4]
QID: P205 (B503)

To verify the position of a fully open manual valve in an operating system, the operator should operate the valve handwheel...

A. in the open direction until the valve is backseated one-half turn.

B. to fully close the valve, then open the valve to the fully open position.

C. in the closed direction, then open the valve to its previously open position.

D. to open the valve until it touches the backseat, then close the valve to the desired position.

ANSWER: C.

TOPIC: 191001
KNOWLEDGE: K1.08 [3.4/3.4]
QID: P405 (B2205)

A comparison of the characteristics of gate valves and globe valves in an operating system indicates a globe valve generally has a _____ pressure drop when fully open, and is _____ commonly used for throttling system flow.

A. smaller; less

B. larger; more

C. smaller; more

D. larger; less

ANSWER: B.

TOPIC: 191001
KNOWLEDGE: K1.08 [3.4/3.4]
QID: P1104 (B504)

Gate valves generally are <u>not</u> used to throttle fluid flow because...

A. gate valves introduce a large system head loss when fully open.

B. all gate valves will experience stem leakage when partially open.

C. the turbulent flow created by a partially opened gate valve would cause damage to the valve.

D. the large size of the valve disk would require an oversized actuator to position the valve accurately.

ANSWER: C.

TOPIC: 191001
KNOWLEDGE: K1.08 [3.4/3.4]
QID: P1405 (B1705)

Refer to the cutaway-view drawing of a valve (see figure below).

Which one of the following describes the type of valve shown?

A. Rising-stem gate valve

B. Nonrising-stem gate valve

C. Rising-stem globe valve

D. Nonrising-stem globe valve

ANSWER: B.

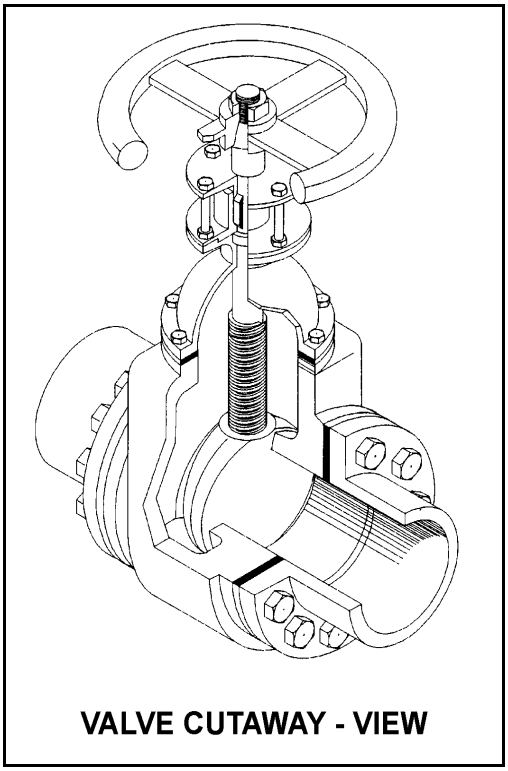

TOPIC: 191001
KNOWLEDGE: K1.08 [3.4/3.4]
QID: P1501 (B1805)

When comparing a 3-inch gate valve to a 3-inch globe valve in the same application in an operating cooling water system, if both valves are fully open, the globe valve produces the _____ head loss and the _____ flow rate.

A. larger; larger

B. larger; smaller

C. smaller; larger

D. smaller; smaller

ANSWER: B.

TOPIC: 191001
KNOWLEDGE: K1.08 [3.4/3.4]
QID: P1602 (B1404)

Which one of the following is a generally accepted method for locally verifying that a manual valve is fully closed in a depressurized static piping system?

A. Check a downstream flow gauge to be indicating zero flow

B. Visually observe the valve rising-stem threads to be fully exposed

C. Attempt to turn the valve handwheel in the close direction and verify no movement

D. Attempt to turn the valve handwheel in the open direction and verify valve opens

ANSWER: C.

TOPIC: 191001
KNOWLEDGE: K1.08 [3.4/3.4]
QID: P1604 (B1604)

Compare a typical gate valve to a typical globe valve in the same application in an operating high-pressure cooling water system. If both valves are fully open, the gate valve will have a _____ pressure drop and is the better choice for _____ flow.

A. higher; throttling

B. higher; isolating

C. lower; throttling

D. lower; isolating

ANSWER: D.

TOPIC: 191001
KNOWLEDGE: K1.08 [3.4/3.4]
QID: P1704 (B1802)

To verify a manual valve in an operating system is closed, the operator should observe valve position indication and operate the valve handwheel in the...

A. open direction at least one full rotation, then close the valve using normal force.

B. open direction until system flow is observed, then close the valve using normal force.

C. close direction using normal force and verify there is no substantial handwheel movement.

D. close direction using normal force, then operate the valve handwheel an additional one-quarter turn in the close direction.

ANSWER: C.

TOPIC: 191001
KNOWLEDGE: K1.08 [3.4/3.4]
QID: P1901 (B1305)

Which one of the following is a disadvantage associated with using a gate valve, versus a globe valve, to throttle flow in a cooling water system?

A. The tortuous flow path through a throttled gate valve body makes flow control difficult.

B. A gate valve will experience stem leakage unless it is fully opened and backseated.

C. The turbulent flow created by a throttled gate valve will cause erosion damage to the valve seat.

D. A fully open gate valve will produce a greater system head loss than a fully open globe valve.

ANSWER: C.

TOPIC: 191001
KNOWLEDGE: K1.08 [3.4/3.4]
QID: P2004 (B1205)

After an adjustment of the packing gland on a valve that had a minor packing leak, the operator attempts to operate the valve but finds that the valve is stuck. What is the most probable cause?

A. The disk separated from the valve stem as a result of overtightening the packing gland.

B. The operator placed the valve in the wrong position for adjusting the packing gland.

C. The valve was overtorqued in the closed direction during the packing gland adjustment.

D. The maintenance technician overtightened the packing gland, causing the stem to bind.

ANSWER: D.

TOPIC: 191001
KNOWLEDGE: K1.08 [3.4/3.4]
QID: P2103 (B203)

Which one of the following is not a generally accepted method for locally verifying that a valve is open?

A. Observe local flow rate instrumentation.

B. Check the local valve position indicator indicates "open."

C. Turn the valve operator in the "close" direction and verify that some movement occurs.

D. Attempt to turn the valve operator in the "open" direction and verify that no movement occurs.

ANSWER: D.

TOPIC: 191001
KNOWLEDGE: K1.08 [3.4/3.4]
QID: P2204 (B2605)

Gate valves generally are not used to throttle water flow because...

A. rapid changes in flow direction through the valve cause a large unrecoverable system head loss.

B. gate valves experience stem leakage unless they are fully open or fully closed.

C. the turbulent flow created by a partially opened gate valve causes excessive seat and disk wear.

D. Flow rate through a gate valve is not proportional to the differential pressure across the valve.

ANSWER: C.

TOPIC: 191001
KNOWLEDGE: K1.08 [3.4/3.4]
QID: P2304 (B2305)

When comparing globe valves to gate valves, globe valves...

A. are less effective at throttling flow.

B. are less effective as pressure regulating valves.

C. produce a smaller pressure decrease when fully open.

D. require less force to open against large differential pressures.

ANSWER: D.

TOPIC: 191001
KNOWLEDGE: K1.08 [3.4/3.4]
QID: P2404 (B905)

When comparing gate valves to globe valves, gate valves...

A. are more effective at throttling flow.

B. are more effective as pressure regulating valves.

C. produce a larger pressure decrease when fully open.

D. require more force to open against large differential pressures.

ANSWER: D.

TOPIC: 191001
KNOWLEDGE: K1.08 [3.4/3.4]
QID: P2504 (B2504)

In a comparison of butterfly valves with ball valves, _____ valves are generally more leak tight in high pressure applications; and _____ valves generally exhibit the lower system pressure drop when fully open.

A. ball; ball

B. ball; butterfly

C. butterfly; ball

D. butterfly; butterfly

ANSWER: A.

TOPIC: 191001
KNOWLEDGE: K1.08 [3.4/3.4]
QID: P2604 (B805)

A gate valve is generally a poor choice for throttling liquid flow because...

A. the turbulent flow created by a partially opened gate valve can cause extensive damage to the valve.

B. the tortuous path through a gate valve body can make flow control difficult.

C. excessive stem leakage will occur unless the gate valve is kept fully open or fully closed.

D. the head loss from a throttled gate valve causes an unacceptable reduction in system flow rate.

ANSWER: A.

TOPIC: 191001
KNOWLEDGE: K1.08 [3.4/3.4]
QID: P2804 (B1604)

In a comparison between a typical gate valve and a typical globe valve in the same application with both valves fully open, the gate valve has a _____ pressure drop and is normally used in _____ flow applications.

A. larger; throttling

B. larger; on/off

C. smaller; throttling

D. smaller; on/off

ANSWER: D.

TOPIC: 191001
KNOWLEDGE: K1.08 [3.4/3.4]
QID: P2903 (B2904)

In a comparison between ball valves and butterfly valves in the same liquid process system application, the valves that typically would allow more leakage when fully closed and under high differential pressure are _____ valves, and the valves that typically would cause the higher system pressure drop when fully open are _____ valves.

A. ball; butterfly

B. ball; ball

C. butterfly; butterfly

D. butterfly; ball

ANSWER: C.

TOPIC: 191001
KNOWLEDGE: K1.08 [3.4/3.4]
QID: P3304 (B3304)

A typical motor-operated valve has been returned to service following a complete maintenance overhaul of the valve and actuator. The valve was remotely opened and closed to verify operability. The measured valve stroke time in each direction was 15 seconds, which is 25% longer than normal.

Which one of the following could have caused the increased stroke time?

A. The valve position limit switches were removed and were not reinstalled.

B. The valve torque limit switches were misadjusted to open at half their normal setpoints.

C. The valve was packed with improved packing material having a lower friction coefficient.

D. The valve stem packing gland was overtightened after the packing material was replaced.

ANSWER: D.

TOPIC: 191001
KNOWLEDGE: K1.08 [3.4/3.4]
QID: P3804 (B3804)

In a comparison between ball valves and butterfly valves in the same liquid process system application, the valves that typically are more leak-tight when fully closed and under high differential pressure are _____ valves; and the valves that typically result in the higher system pressure drop when fully open are _____ valves.

A. ball; butterfly

B. ball; ball

C. butterfly; butterfly

D. butterfly; ball

ANSWER: A.

TOPIC: 191001
KNOWLEDGE: K1.11 [3.2/3.2]
QID: P3804 (B3804)

In a comparison between ball valves and butterfly valves in the same liquid process system application, the valves that typically are more leak-tight when fully closed and under high differential pressure are _____ valves; and the valves that typically result in the higher system pressure drop when fully open are _____ valves.

A. ball; butterfly

B. ball; ball

C. butterfly; butterfly

D. butterfly; ball

ANSWER: A.