DAVIS-BESSE REACTOR VESSEL HEAD DEGRADATION
LESSONS-LEARNED TASK FORCE REPORT

TABLE OF CONTENTS

EXECUTIVE SUMMARY v
Objective and Scope v
Background v
Observations and Conclusions vii
Recommendations x

1. INTRODUCTION 1
1.1 Objective 1
1.2 Scope and Method 1

2. EVENT SUMMARY AND BACKGROUND 8
2.1 Event Summary 8
2.2 Background 9
2.2.1 Background on Alloy 600 Nozzle Cracking 10
2.2.2 Background on Boric Acid Degradation 12
2.3 Applicable Regulatory Requirements 13

3. REVIEW RESULTS AND RECOMMENDATIONS 20
3.1 NRC and Industry Review, Assessment, and Followup of Operating Experience . 23
3.1.1 Significant Operating Experience Involving Boric Acid Leakage and Corrosion 23
3.1.1.1 Detailed Discussion 24
3.1.1.2 Recommendations 26
3.1.2 Generic Communication Program Implementation 26
3.1.2.1 Detailed Discussion 27
3.1.2.2 Recommendations 32
3.1.3 Generic Issues Program Implementation 33
3.1.3.1 Detailed Discussion 33
3.1.3.2 Recommendations 34
3.1.4 Operating Experience Involving Foreign Nuclear Power Plants 35
3.1.4.1 Detailed Discussion 35
3.1.4.2 Recommendations 37
3.1.5 Assessment and Verification of Industry Technical Information 37
3.1.5.1 Detailed Discussion 37
3.1.5.2 Recommendations 39
3.1.6 NRC Operating Experience Review and Assessment Capability 39
3.1.6.1 Detailed Discussion 39
3.1.6.2 Recommendations 41
3.2 DBNPS Assurance of Plant Safety 41
3.2.1 Reactor Coolant System Leakage Symptoms and Indications 42
3.2.1.1 Detailed Discussion 43
3.2.1.2 Recommendations 50
3.2.2 Boric Acid Corrosion Control Program and Implementation 51
3.2.2.1 Detailed Discussion 51
3.2.2.2 Recommendations 55

Table of Contents (Continued)

3.2.3 Owners Group and Industry Guidance 55
3.2.3.1 Detailed Discussion 56
3.2.3.2 Recommendations 58
3.2.4 Internal and External Operating Experience Awareness 58
3.2.4.1 Detailed Discussion 58
3.2.4.2 Recommendations 60
3.2.5 Oversight of Safety Related Activities 60
3.2.5.1 Detailed Discussion 61
3.2.5.2 Recommendations 65
3.3 NRC Assessment of DBNPS Safety Performance 65
3.3.1 Reactor Coolant System Leakage Assessment 66
3.3.1.1 Detailed Discussion 66
3.3.1.2 Recommendations 71
3.3.2 Inspection Program Implementation 71
3.3.2.1 Detailed Discussion 72
3.3.2.2 Recommendations 76
3.3.3 Integration and Assessment of Performance Data 77
3.3.3.1 Detailed Discussion 77
3.3.3.2 Recommendations 80
3.3.4 Guidance and Requirements 81
3.3.4.1 Detailed Discussion 81
3.3.4.2 Recommendations 86
3.3.5 Staffing and Resources 87
3.3.5.1 Detailed Discussion 88
3.3.5.2 Recommendations 90
3.3.6 Davis-Besse Nuclear Power Station Communications 90
3.3.6.1 Detailed Discussion 90
3.3.6.2 Recommendations 92
3.3.7 Licensing Process Guidance and Implementation 92
3.3.7.1 Detailed Discussion 93
3.3.7.2 Recommendations 97

FIGURES

Figure 1-1 NRC ORGANIZATION 4
Figure 1-2 DAVIS-BESSE SITE ORGANIZATION (Circa February 2002) 7
Figure 2-1 TYPICAL PWR REACTOR 14
Figure 2-2 SCHEMATIC VIEW OF TYPICAL B&W RPV HEAD 15
Figure 2-3 SCHEMATIC VIEW OF TYPICAL B&W VHP NOZZLE 16
Figure 2-4 DBNPS VHP NOZZLE NO.3 DEGRADATION CAVITY 17
Figure 2-5 BORIC ACID DEPOSITS ON RPV HEAD FLANGE 18
Figure 2-6 BORIC ACID DEPOSITS ON RPV HEAD AND AREA RELATIVELY FREE OF DEPOSITS DURING RFO 12, APRIL 2000 19
Figure 3-1 TIME LINE RELATING SIGNIFICANT ITEMS OF INTEREST 22

Table of Contents (Continued)

APPENDICES

APPENDIX A - Consolidated Table of Recommendations
APPENDIX B - List of Abbreviations and Acronyms
APPENDIX C - List of Documents Reviewed
APPENDIX D - List of Persons Contacted
APPENDIX E - Primary System Leakage and Boric Acid Corrosion Operating Experience at U.S. Pressurized Water Reactors (1986-2002)
APPENDIX F - Summary of Related Issues Involving Previous NRC Lessons-Learned Efforts

This page intentionally blank

EXECUTIVE SUMMARY

Objective and Scope

The U.S. Nuclear Regulatory Commission (NRC) has conducted a number of lessons-learned reviews to assess its regulatory processes as a result of significant plant events or plant safety issues. Consistent with this practice, the NRC's Executive Director for Operations (EDO) directed the formation of an NRC task force in response to the issues associated with the extensive degradation of the pressure boundary material of the Davis-Besse Nuclear Power Station (DBNPS) reactor pressure vessel (RPV) head. The degraded RPV head was identified by the FirstEnergy Nuclear Operating Company (FENOC), the licensee for DBNPS, on March 5, 2002. The objective of this task force was to independently evaluate the NRC's regulatory processes related to assuring RPV head integrity in order to identify and recommend areas for improvement that may be applicable to either the NRC or the nuclear industry.

Consistent with its charter, the task force reviewed five general areas, including: (1) reactor oversight process issues; (2) regulatory process issues; (3) research activities; (4) international practices; and (5) the NRC's Generic Issues Program. In reviewing these areas, the task force used processes and techniques that were similar to those used in NRC Incident Investigation Team and Diagnostic Evaluation Team reviews. A representative from the State of Ohio observed selected task force review activities. The task force conducted fact finding at DBNPS, which consisted of a review of the RPV head degradation condition and related issues. The task force conducted review activities at NRC regional and headquarters offices, which consisted of assessments of several NRC programs and functional areas. The task force held discussions with representatives from a number of external organizations.

Background

On March 12, 2002, the NRC dispatched an Augmented Inspection Team (AIT) to gather facts surrounding the circumstances associated with the March 5, 2002, discovery of a cavity in the DBNPS RPV head. The discovery of the cavity occurred following a plant shutdown for a refueling outage, during which the licensee was conducting inspections for reactor pressure vessel head penetration (VHP) nozzle cracking due to primary water stress corrosion cracking (PWSCC). These inspections were being conducted in response to an NRC bulletin. During these inspections, the licensee discovered cracks in several VHP nozzles. Subsequent to the machining process to repair VHP Nozzle 3, the nozzle was observed to displace, or tip in the downhill direction as the machining apparatus was withdrawn. The displacement led DBNPS personnel to examine the region adjacent to VHP Nozzle 3. The licensee discovered a cavity with a surface area of approximately 20-30 square inches. Upon further examination, the licensee identified that the cavity extended completely through the 6.63 inch thick carbon steel RPV head down to a thin internal liner of stainless steel cladding. In this case, the cladding withstood the primary system pressure over the cavity region during operation. However, the cladding is not designed to perform this function. Boric acid corrosion of the carbon steel RPV head was the primary contributor to the RPV head degradation.

The VHP nozzles, which are made from a nickel based alloy, are part of the reactor coolant pressure boundary (RCPB) in pressurized water reactor (PWR) plants. The VHP nozzles are highly resistant to general corrosion, but can be susceptible to PWSCC. Borated water is used

in PWR plants as a reactivity control agent to aid in control of the nuclear reaction. If leakage occurs from the reactor coolant system (RCS), the escaping coolant flashes to steam and leaves behind a concentration of impurities, including boric acid. Under certain conditions, boric acid can cause extensive and rapid degradation of carbon steel components. If undetected and uncorrected, VHP nozzle leakage could potentially propagate to a failure of a nozzle and result in a loss-of-coolant accident (LOCA). In addition, boric acid-induced material wastage of the RPV head could result in a LOCA independent of catastrophic failure of a VHP nozzle.

The cracking of Alloy 600 nozzles was first discovered in the late 1980s. The cracking of VHP nozzles was first observed at a French PWR, Bugey, Unit 3 in 1991. As a result of the Bugey experience, the NRC implemented an action plan to address PWSCC of VHP nozzles fabricated from Alloy 600. This action plan included an NRC staff review of safety assessments conducted by the PWR owners groups. These owners group reports addressed VHP nozzle cracking and the potential for boric acid degradation of RPV heads from leakage through the VHP nozzle cracks. The U.S. industry reports concluded that axial cracking, even if through-wall, was not highly safety significant. These owners group reports also concluded that circumferential cracking of VHP nozzles was improbable and boric acid attack of the RPV head, if it were to occur, would be discovered through boric acid walkdown inspections well before safety margins would be compromised. In a safety evaluation dated November 19, 1993, the NRC agreed with this assessment, but reserved judgment regarding circumferential cracking on a case-by-case basis, and encouraged the industry to develop enhanced VHP nozzle leakage monitoring techniques.

In 1997, continued NRC concern with this issue led the NRC to issue a generic letter which requested PWR plant licensees to inform NRC of their plans to monitor and manage cracking in VHP nozzles and their intentions, if any, to perform non-visual, volumetric examinations of their VHP nozzles. Also, this NRC generic letter requested information regarding the occurrence of resin bead intrusions in PWR plants because of the concern that such intrusions could result in circumferential intergranular attack of VHP nozzles. In July 1997, the owners groups submitted their generic responses to the NRC on behalf of their members. The generic responses ranked the potential for the VHP nozzles of their member plants to develop PWSCC.

Subsequently, inspections conducted in response to the generic letter led to the discovery of extensive circumferential cracking of several VHP nozzles at Oconee Nuclear Station (ONS), Unit 3 in the spring of 2001. Circumferential cracking in VHP nozzles is more safety significant than axial cracking since it creates the potential for separation of the nozzle if the cracking is severe enough. As a result of the ONS cracking experience, the NRC issued a bulletin which requested licensees to address the potential for similar cracking at their plants and to discuss their plans for VHP nozzle inspections. The Electric Power Research Institute/Materials Reliability Project took the lead for the industry in “binning” plants by susceptibility relative to ONS. The Babcock & Wilcox (B&W) plants, such as ONS and DBNPS, were all considered to be highly susceptible to the potential for circumferential cracking. By the end of November 2001, all but one of the other B&W units had identified circumferential cracking of VHP nozzles, while the remaining unit had identified VHP nozzle axial cracking. For highly susceptible plants, the bulletin recommended that VHP nozzle inspections be performed by December 31, 2001.

The licensee believed that it was safe to operate the plant until the next scheduled refueling outage in the spring of 2002 before conducting the VHP nozzle inspections recommended by the bulletin. Because FENOC did not intend to perform the inspections recommended in the

bulletin by the requested date, the NRC initiated action to prepare an immediately effective order to require DBNPS to cease power operations by December 31, 2001. Subsequently, the licensee provided additional information to the NRC. The NRC accepted FENOC's justification to operate DBNPS only until February 16, 2002, provided that DBNPS implement compensatory measures to reduce the risk of VHP nozzle failure and perform volumetric examinations of 100 percent of the VHP nozzles. During subsequent inspections, DBNPS discovered VHP nozzle cracking, including through-wall cracking of several VHP nozzles. The licensee discovered a long axial crack in VHP Nozzle 3. This crack was the source of the leakage that was likely the most significant contributor to the RPV head degradation.

Observations and Conclusions

About 10 years ago, the NRC and industry recognized the potential for an event such as the one that occurred at DBNPS. In spite of the wealth of information, which includes extensive foreign and domestic PWR plant operating experience, as well as research activities involving tests and engineering analyses, the DBNPS event occurred. Events involving the material wastage of components stemming from primary system leaks have been reported for more than 30 years. For more than 15 years, Alloy 600 nozzle leakage events in U.S. PWR plants have been reported. In 1993, the industry and NRC specifically addressed the possibility of extensive RPV head wastage stemming from undetected VHP nozzle leaks involving axial cracking caused by PWSCC. The industry and the NRC concluded that the likelihood of such an event was low because VHP nozzle leaks would be detected before significant RPV head degradation could occur.

The task force concluded that DBNPS VHP nozzle leakage and RPV head degradation event was preventable. The task force focused on understanding why the event was not prevented. While this focus was primarily introspective, this question could not be answered without considering industry activities and DBNPS's performance. The task force concluded that the event was not prevented because: (1) the NRC, DBNPS, and the nuclear industry failed to adequately review, assess, and followup on relevant operating experience; (2) DBNPS failed to assure that plant safety issues would receive appropriate attention; and (3) the NRC failed to integrate known or available information into its assessments of DBNPS's safety performance.

Because the NRC and nuclear industry concluded that Alloy 600 VHP nozzle cracking was not an immediate safety concern, the NRC and the industry's efforts to further evaluate this issue became protracted. Also, the NRC and industry continued to rely on visual inspections of VHP nozzles. These inspections are incapable of characterizing the extent of nozzle cracking and damage. While the industry initiated actions to improve non-visual inspection capabilities, the requirements governing inspections remained unchanged.

The NRC recognized that some affected PWR plants could potentially operate with small leaks which would not be detected by boric acid corrosion control walkdown inspections. Rather than adopt an approach of leakage prevention, the NRC focused on measures intended to enhance licensee capabilities to detect small VHP nozzle leaks. Because of this, the NRC believed it was prudent for the industry to consider implementing an enhanced leakage detection method for detecting small leaks during plant operation. Leakage detection would serve as a means of providing defense-in-depth to account for any potential uncertainties in the industry analysis that boric acid corrosion walkdown inspections would be an effective means of detecting VHP

nozzle leaks before significant degradation could occur. However, PWR plant licensees have not installed enhanced leakage detection systems designed to detect VHP nozzle leaks.

The licensee for DBNPS, as well as the NRC, failed to learn a key lesson from boric acid leakage and corrosion operating experience. Specifically, predictions regarding boric acid-induced corrosion rates, for in-plant boric acid leaks, have not been reliable in all cases. Operating experience reveals instances in which corrosion rates were significantly underestimated for identified boric acid leaks because of erroneous assumptions regarding the nature of the leakage, environmental conditions, the relationship between the actual leakage and experimental data, or other factors. As a consequence, in some instances, carbon steel components have been corroded to a much greater extent than anticipated. A number of these events occurred even though the underlying leakage had been previously identified by licensees, as they deferred material wastage assessments and repairs on the basis of the assumption that the corrosion rates would be inconsequential. At least two such events occurred at DBNPS prior to the discovery of the RPV head degradation.

The NRC and the industry regarded boric acid deposits on the RPV head as an issue that required attention; however, the NRC and industry did not regard the presence of the boric acid deposits on the RPV head as a significant safety concern because they expected that boric acid crystals would form from flashing steam and such crystals would not cause significant corrosion of RPV heads. For example, the NRC and industry were concerned that the presence of boric acid deposits, from CRDM flange leakage in the case of B&W PWR plants, could obscure the indications of VHP nozzle leakage. While dry boric acid crystals would not be expected to result in significant corrosion rates, representative testing of nozzle leakage indicated that corrosion rates from boric acid solutions could be in the range of 4 inches per year. These rates of corrosion could occur at primary system leakage rates that are significantly lower than the typical PWR plant technical specification limit, namely, at a rate too small to directly measure with the current leakage detection systems. Even at somewhat lower rates of corrosion, properly implemented boric acid corrosion control programs may not lead licensees to detect VHP nozzle leaks before significant RPV head degradation could occur. The results of these tests, while known within the NRC, were not widely recognized by the NRC staff.

The recurring nature of boric acid leakage and corrosion events generally indicates a lack of effectiveness of industry corrective actions in these areas. This event also indicates that DBNPS failed to effectively implement its operating experience review program. Also, the NRC failed to adequately review, assess, and followup on relevant operating experience to bring about the necessary industry and plant specific actions to prevent this event. While much was known within the NRC about nozzle cracking and boric acid corrosion, other important details associated with these two issues, such as the number of nozzle cracking events, as well as insights from foreign operating experience and domestic research activities, were not widely recognized or were viewed as not being applicable. The NRC accepted industry positions regarding the nature and significance of VHP nozzle cracking without having independently verified a number of key assumptions, including the implementation effectiveness of boric acid corrosion control programs and enhanced visual inspections of RPV heads. None of the NRC's previously identified generic issues pertained directly to either VHP nozzle cracking or boric acid corrosion; although, there was one generic issue that pertained, in part, to boric acid corrosion of fasteners. This generic issue was classified as resolved in 1991.

The task force identified multiple DBNPS performance problems that indicated DBNPS's failure to assure that plant safety issues would receive appropriate attention. Specifically, the licensee failed to: (1) resolve long-standing or recurring primary system component leaks; (2) establish and effectively implement a boric acid corrosion control program; and (3) adequately implement industry guidance and NRC recommendations intended to identify VHP nozzle leakage. Collectively, these and other performance issues involved: (1) strained engineering resources; (2) an approach of addressing the symptoms of problems as a means of minimizing production impacts; (3) a long-standing acceptance of degraded equipment; (4) a lack of management involvement in important safety significant work activities and decisions, including a lack of a questioning attitude by managers; (5) a lack of engineering rigor in the approach to problem resolution; (6) a lack of awareness of internal and external operating experience, including the inability to implement effective actions to address the lessons-learned from past events; (7) ineffective and untimely corrective actions, including the inability to recognize or address repetitive or recurring problems; (8) ineffective self-assessments of safety performance; (9) weaknesses in the implementation of the employee concerns program; and (10) a lack of compliance with procedures.

For a number of years, the NRC was aware of the symptoms and indications of active RCS leakage. The NRC even reviewed some of these individual symptoms during routine inspections; however, the NRC failed to integrate this information into its assessments of DBNPS's safety performance. As a result, the NRC failed to perform focused inspections of these symptoms. If focused inspections had been performed, then the NRC may have ultimately discovered the VHP nozzle leaks and RPV head degradation. The former senior resident inspector became aware of boric acid deposits on the RPV head at the onset of the spring 2000 refueling outage; however, he did not inform his supervisor and did not perform inspection followup. There were other licensee performance data that were available for review, in the context of the NRC's inspection program, but the NRC did not review or assess this information. Actual and perceived weaknesses with inspection, enforcement, and assessment guidance, as well as inadequate VHP nozzle and RPV head inspection requirements, contributed to the NRC's failure to identify the problem. During the period in which the symptoms and indications of RCS leakage were visible, the managers and staff members of the NRC's regional office responsible for DBNPS oversight were more focused on other plants that were the subject of increased regulatory oversight. This distracted management attention and contributed to staffing and resource challenges impacting the regulatory oversight of DBNPS. The dissemination of some licensee information resulted in actual and potential missed opportunities for the NRC to have identified the problem. Also, there were a number of licensing process issues that contributed to the NRC's failure to identify the problem.

Recommendations

As a result of its review, the task force determined that the NRC should take specific actions directed toward areas it considered contributors to the DBNPS event.

The task force's recommendations are addressed in Section 3 of the report. Appendix A provides a consolidated listing of these recommendations. The recommendations involve the following areas: (1) inspection guidance; (2) NRC and industry processes to assess operating experience; (3) industry code inspection requirements for RCPB components (ASME

requirements); (4) assessment of NRC programs, processes, and capabilities; (5) NRC staff training and experience; (6) technical specification requirements related to RCPB integrity; (7) reactor coolant system leakage monitoring practices and capabilities; (8) stress corrosion cracking and boric acid corrosion technical information and guidance; (9) NRC licensing process guidance development and implementation; and (10) previous NRC lessons-learned reviews.

1. INTRODUCTION

1.1 Objective

The U.S. Nuclear Regulatory Commission (NRC) has conducted a number of lessons-learned reviews to assess its regulatory processes as a result of significant plant events or plant safety issues. Consistent with this practice, the NRC's Executive Director for Operations (EDO) directed the formation of an NRC task force in response to the issues associated with the extensive degradation of the pressure boundary material of the Davis-Besse Nuclear Power Station (DBNPS) reactor pressure vessel (RPV) head. The degraded RPV head was identified by the FirstEnergy Nuclear Operating Company (FENOC), the licensee for DBNPS, on March 5, 2002. The objective of the Davis-Besse Reactor Vessel Head Degradation Lessons-Learned Task Force (task force) is defined in an NRC memorandum, dated May 15, 2002, from William D. Travers, EDO, to Arthur T. Howell III, the task force team leader. That memorandum and its attachment describe the approach and charter for the inter-office task force to assess the lessons-learned with regard to the degradation of the DBNPS RPV head. The objective of this task force was to independently evaluate the NRC's regulatory processes related to assuring RPV head integrity in order to identify and recommend areas for improvement that may be applicable to either the NRC or the nuclear industry.

1.2 Scope and Method

Consistent with its charter, the task force reviewed five general areas, including: (1) reactor oversight process issues; (2) regulatory process issues; (3) research activities; (4) international practices; and (5) the NRC's Generic Issues Program. The task force reviewed the results of the NRC's Augmented Inspection Team (AIT) inspection of the DBNPS event, and considered the available information associated with the licensee's various root cause determination efforts.
The task force did not conduct a detailed technical review of the DBNPS Alloy 600 reactor pressure vessel head penetration (VHP) nozzle cracking wastage mechanisms because these areas are the focus of other NRC review activities. Since the task force was primarily concerned with why the DBNPS RPV head degradation event was not prevented, it generally did not focus on the NRC's actions subsequent to the time of discovery of the problem.

On June 5, 2002, the task force briefed the Advisory Committee for Reactor Safeguards. The purpose of the briefing was to discuss the task force charter. The task force conducted a public meeting near the DBNPS site on June 12, 2002, and conducted another public meeting in the NRC headquarters offices on June 19, 2002, to solicit public comments on the scope of the task force review activities. The task force considered all the comments received.

The task force used processes and techniques that were similar to those used in NRC Incident Investigation Team and Diagnostic Evaluation Team reviews. The task force effort consisted of a preparation phase, a review phase, and an assessment and documentation phase. Additionally, the task force was organized into two groups. One group focused principally on fact finding at DBNPS, as well as, the review of applicable regulatory programs, processes, and implementing procedures involving inspection, enforcement, industry operating experience, generic communications, allegations, and plant safety performance assessment. A second group focused principally on the scope of the applicable requirements, licensing review processes, the industry process for changing regulatory commitments, applicable industry

technical guidance and initiatives, international experience and practices, research activities, other NRC lessons-learned reviews, and the NRC's Generic Issues Program.

During the preparation phase, the task force conducted a number of activities to facilitate the subsequent review and assessment phases. The task force conducted coordination briefings with other NRC offices, as well as with representatives from the State of Ohio (DBNPS is located in Ottawa County, Ohio). In addition, the NRC's Office of Enforcement provided a summary of relevant enforcement actions. The Oak Ridge National Laboratory compiled a summary of boric acid leakage and boric acid corrosion events reported to the NRC. The NRC and the State of Ohio established an informal agreement which addressed the observation of the task force's activities.

During the review phase, the task force engaged in independent fact finding at the DBNPS site, and conducted review activities involving all four of the NRC's regional offices and its headquarters offices. These review activities principally involved interviewing personnel and reviewing records. Figures 1-1 and 1-2 depict the organizational structures of the NRC and DBNPS, respectively. The task force conducted limited fact finding reviews involving Arkansas Nuclear One (ANO), Oconee Nuclear Station (ONS), and Three Mile Island (TMI).

The task force interviewed NRC employees from all four regional offices and the various headquarters offices. The task force interviewed a number of other individuals, either in person or telephonically, from several external organizations. These organizations included the Babcock and Wilcox Owners Group (B&WOG), the Nuclear Energy Institute (NEI), Framatome Technologies, Inc. (FTI), and the Electric Power Research Institute (EPRI). Also, the task force held discussions with representatives of the General Directorate for Nuclear Safety and Radiological Protection of France (DGSNR).

The task force conducted review activities at DBNPS during the periods June 10-11, 2002, June 24 - July 3, 2002, and July 16 - 21, 2002. While at the DBNPS site, members of the task force reviewed licensee records, interviewed licensee managers and staff members, and toured the containment building and other selected areas of the facility. A representative of the State of Ohio observed the task force's review activities at DBNPS.

The DBNPS fact finding focused on a review of the RPV head degradation condition and related issues, such as: (1) reactor coolant system (RCS) leakage history; (2) the symptoms and indications associated with active RCS leaks; (3) the boric acid corrosion control program; (4) precursor events, with emphasis on a 1998 event involving the boric acid corrosion wastage of pressurizer spray valve fasteners; (5) the licensee's documented submissions and actions in response to NRC generic communications, such as Generic Letter (GL) 88-05, "Boric Acid Corrosion of Carbon Steel Reactor Pressure Boundary Components in PWR Plants," GL 97-01, "Degradation of Control Rod Drive Mechanism Nozzle and Other Vessel Closure Head Penetrations," and Bulletin 2001-01, "Circumferential Cracking of Reactor Pressure Vessel Head Penetration Nozzles"; and (6) other licensee records.

The review activities conducted by the task force at NRC regional and headquarters offices consisted of assessing several NRC programs and functional areas. The task force reviewed: (1) DBNPS licensing documents; (2) NRC policy and procedural documentation; (3) office instructions and procedures; (4) inspection reports; (5) licensee event reports; (6) enforcement actions; (7) plant assessment records; (8) industry generic technical reports; (9) applicable

industry codes; (10) NRC generic reports associated with boric acid corrosion, VHP nozzle cracking, and RCS leakage integrity; and (11) other pertinent records.

The task force conducted a limited review of selected NRC lessons-learned review reports to determine whether they suggested any recurring or similar problems. These reports included: (1) Indian Point 2 Steam Generator Tube Failure Lessons-Learned Report; (2) Task Force Report Concerning the Effectiveness of Implementation of the NRC's Inspection Program and Adequacy of the Licensee's Employee Concerns Program at the South Texas Project; and (3) Millstone Lessons-learned Task Group Report, Part 1: Review and Findings, and Part 2: Policy Issues. The results of this review are documented in Appendix F of this report.

Figure 1-1 **NRC ORGANIZATION**

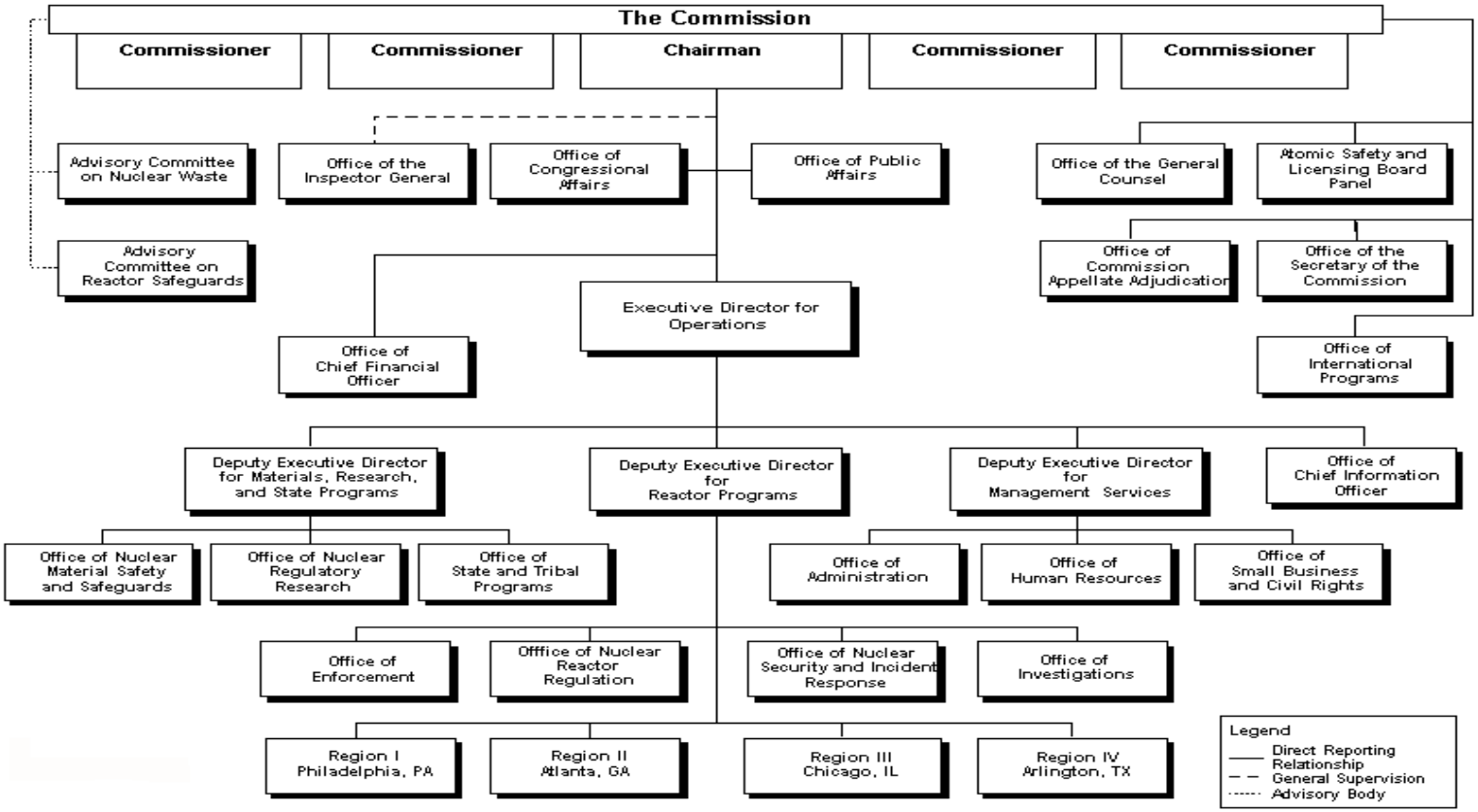

Figure 1-1 (Continued) NRC ORGANIZATION

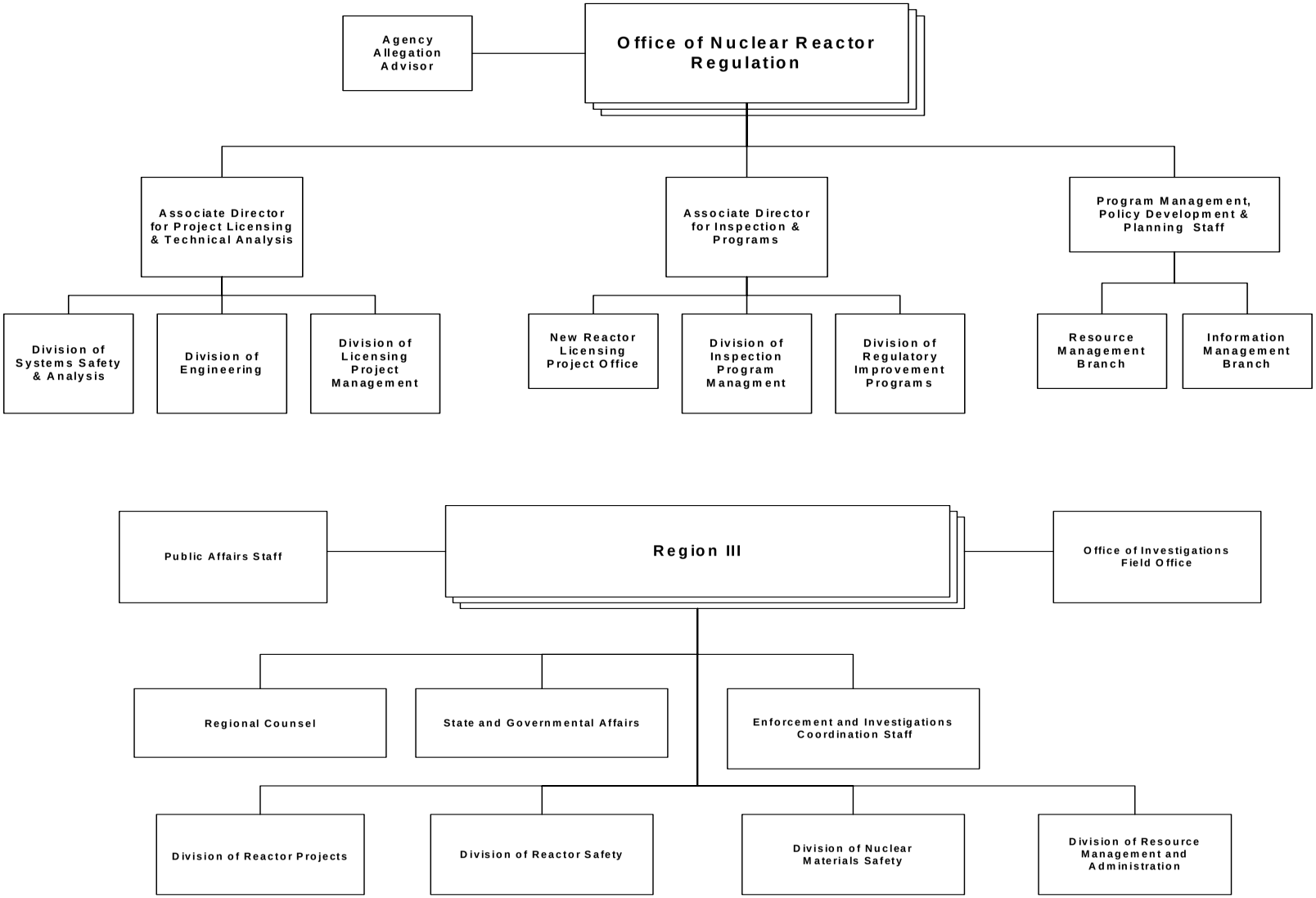

Figure 1-1 (Continued) **NRC ORGANIZATION**

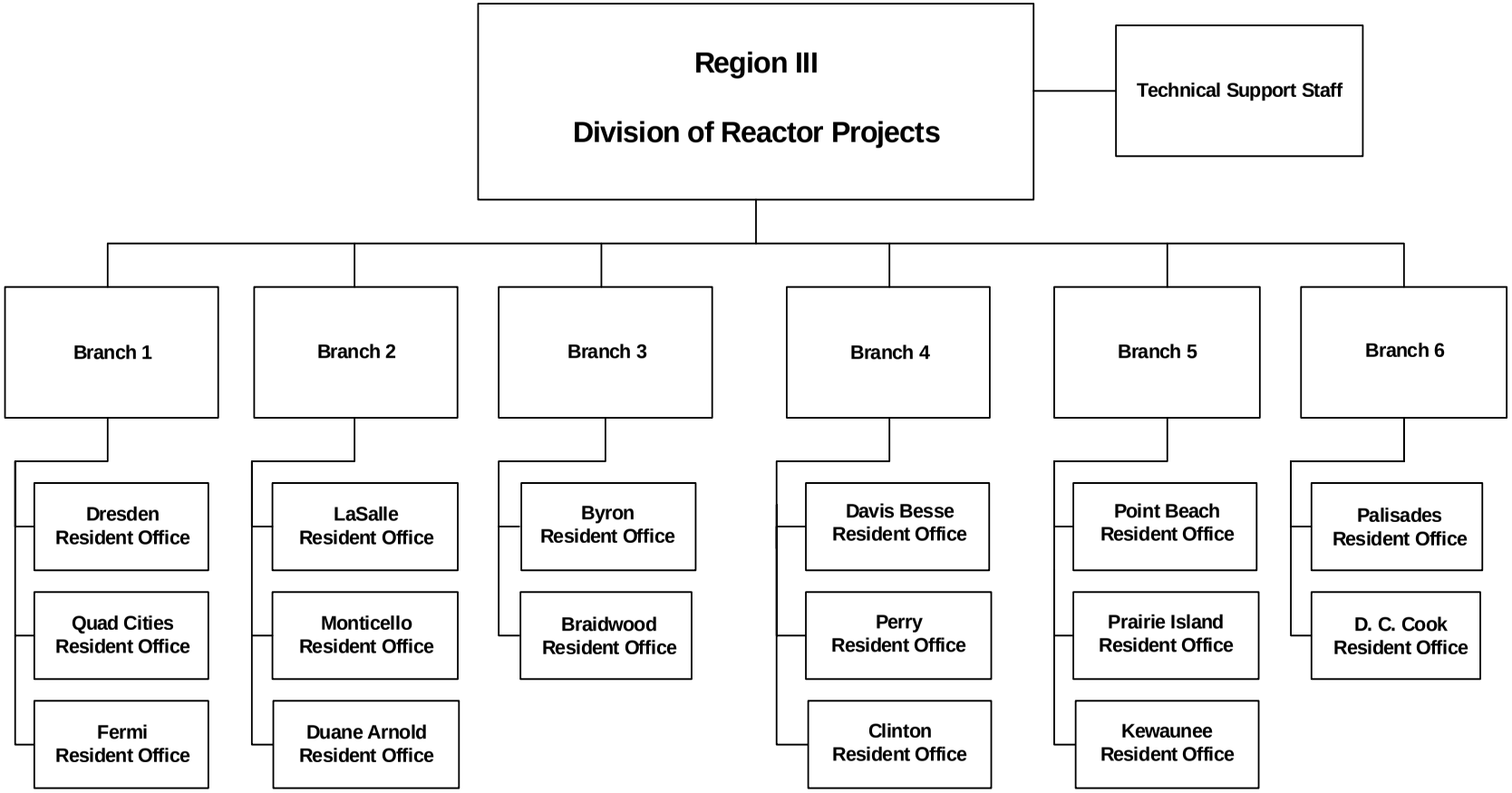

Figure 1-2 DAVIS BESSE SITE ORGANIZATION (Circa February 2002)

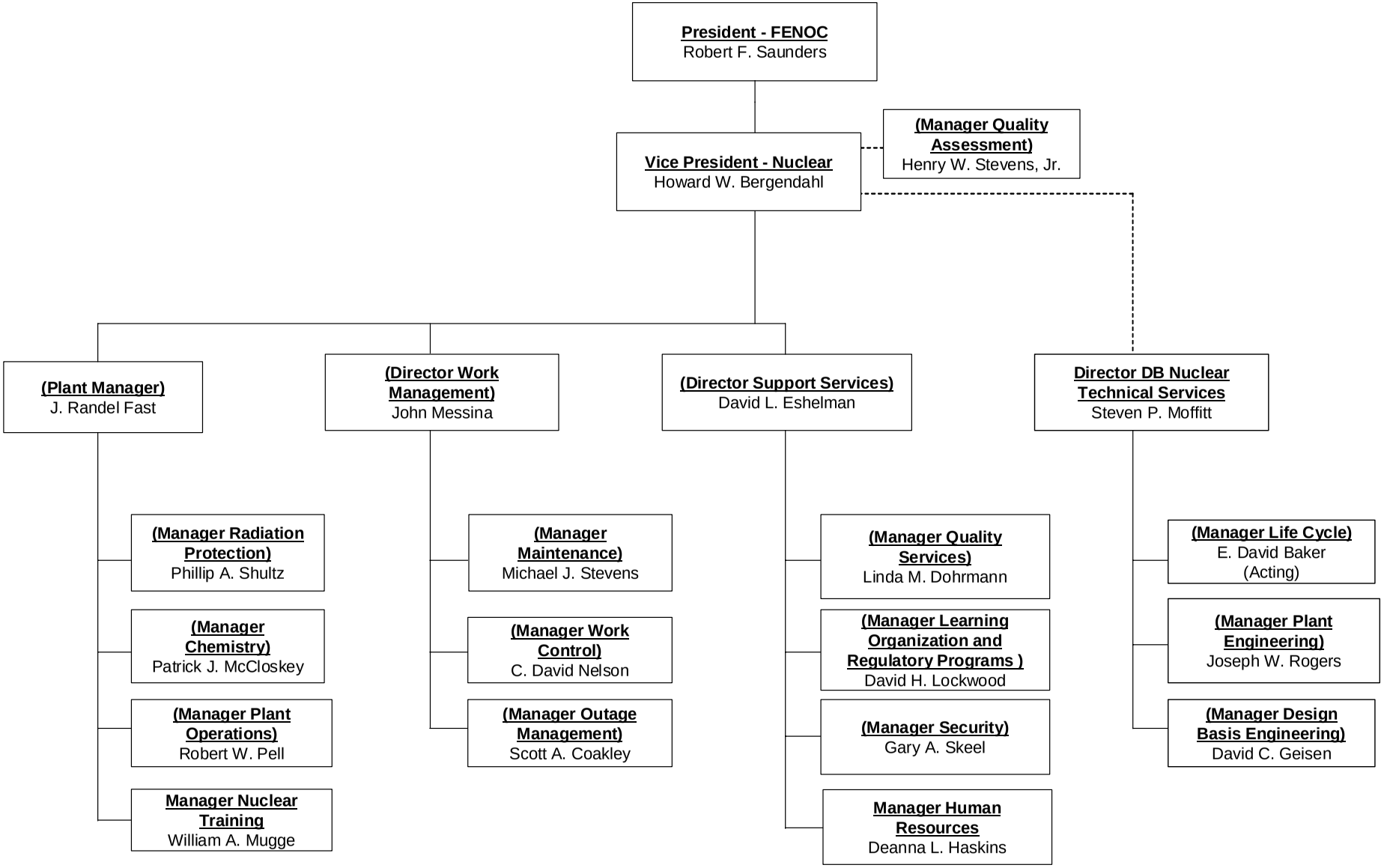

2. EVENT SUMMARY AND BACKGROUND

2.1 Event Summary

On March 5, 2002, the licensee for DBNPS in Oak Harbor, Ohio, discovered a cavity in the RPV head, adjacent to VHP Nozzle 3. Davis-Besse Nuclear Power Station is a pressurized water reactor (PWR) plant. A schematic of a typical PWR reactor is shown in Figure 2-1. The DBNPS Nuclear Steam Supply System (NSSS) was fabricated by the Babcock & Wilcox (B&W) Company. Typical B&W RPV head and VHP nozzle design and fabrication details are depicted in Figures 2-2 and 2-3. Details of the degradation cavity in the DBNPS RPV head are shown in Figure 2-4.

The discovery of the cavity occurred following a plant shutdown for a refueling outage, during which the licensee was conducting inspections for VHP nozzle cracking caused by primary water stress corrosion cracking (PWSCC). These inspections were being conducted in response to NRC Bulletin 2001-01. During these inspections, cracks were discovered in several VHP nozzles, including VHP Nozzle 3. The licensee had contracted with Framatome ANP, Inc., to perform repairs of cracked VHP nozzles, where necessary, by machining away the affected portion of the VHP nozzle and re-establishing the pressure boundary by welding the VHP nozzle further up into the RPV head.

Subsequent to the machining process to repair VHP Nozzle 3, the nozzle was observed to displace, or tip in the downhill direction as the machining apparatus was withdrawn. Under normal circumstances, such movement of VHP nozzles would not have been possible since the nozzles are laterally restrained by approximately 6-1/2 inches of RPV head material. The displacement led DBNPS personnel to examine the region adjacent to VHP Nozzle 3. The licensee discovered a cavity with a surface area of approximately 20-30 square inches. Upon further examination, the licensee identified that the cavity extended completely through the 6.63 inch thick carbon steel RPV head down to a thin internal liner of stainless steel cladding (Figure 2-4). This implied that immediately prior to the plant shutdown for refueling, the stainless steel cladding was acting as the primary system pressure boundary over the region of the cavity. In this case, the cladding withstood the primary system pressure over the cavity region during operation. However, the cladding is not designed to perform this function.

On March 12, 2002, the NRC dispatched an AIT to gather facts surrounding the circumstances associated with the event. The AIT results are documented in NRC Inspection Report 50-346/02-03. The AIT concluded that the DBNPS staff missed several opportunities to identify the degradation of the RPV head at an earlier time.

In a May 7, 2002, meeting between the NRC and FENOC, the licensee presented its technical root cause of the RPV head degradation. Boric acid corrosion of the carbon steel RPV head was clearly the primary contributor to the degradation. The primary corrosive attack of the RPV head was likely caused by leakage from a long through-wall axial crack in VHP Nozzle 3, but may also have been assisted by control rod drive mechanism (CRDM) flange leakage onto the RPV head from above. The potential for boric acid degradation of the carbon steel of an RPV head, as a result of leakage through a cracked VHP nozzle, was recognized and analyzed in industry safety evaluations submitted to the NRC in 1993 (refer to Section 3.2.3). However, at

that time, the industry concluded and the NRC agreed, that if this type of degradation were to occur, it would be discovered through boric acid inspections before reactor coolant pressure boundary (RCPB) safety margins would be compromised.

2.2 Background

The DBNPS facility is a 2-loop, B&W fabricated PWR plant. There is a primary RCS loop with two steam generators which transfer heat from the RCS to the secondary water. This heat causes the secondary water to boil, and the resulting steam is used to turn a turbine, which turns an electrical generator to produce electricity.

Pressurized water reactor plants use water as a primary coolant and as a moderator to control the nuclear reaction in the reactor. In addition, such light water reactors employ control rods to enable further control of the nuclear reaction. In a PWR, these control rods enter the reactor vessel from atop the RPV head (refer to Figures 2-1 and 2-2). Also, PWR plants use boron, which is a neutron absorber, dissolved in the RCS as boric acid, to compensate for fuel utilization during the operating cycle. The boron concentration in the RCS is diluted as fuel is used. Normal RCS operating pressure is approximately 2150 psig. The RPV head is fabricated from carbon steel and is attached to the RPV through a bolted and flanged connection (refer to Figures 2-1 and 2-2). The interior of the RPV head is lined with stainless steel cladding as a barrier to general corrosion. The cladding is deposited through a welding process. For the typical B&W design, there are approximately 69 VHP nozzles for control rods.

The VHP nozzles are part of the RCPB, which is one of three principal barriers to the release of radioactive fission products. The other two barriers are the fuel cladding and containment building. The VHP nozzles of commercial U.S. PWR plants are fabricated from Inconel 600 (also known as Alloy 600) and are approximately 4 inches in diameter and have a wall thickness of approximately 0.6 inches. The primary chemical constituents of Inconel 600 are nickel, chromium and iron. The alloy and associated weld materials (Alloys 82 and 182) are highly resistant to general corrosion, but can be susceptible to PWSCC. The VHP nozzles are shrunk-fit and welded into pre-machined holes in the RPV head. The VHP nozzles are joined to the reactor vessel head by J-groove welds that only partially penetrate through the head thickness (refer to Figure 2-3). Primary water stress corrosion cracking of a VHP nozzle or the weld connecting the nozzle to the RPV head can lead to leakage from the RCPB. If undetected and uncorrected, this type of degradation could potentially propagate to a failure of the nozzle and result in a loss-of-coolant accident (LOCA). In addition, boric acid-induced material wastage of the RPV head could result in a LOCA independent of catastrophic failure of a VHP nozzle.

At DBNPS, a service structure is attached to the RPV head. It is approximately 18 feet high and 10 feet in diameter. This structure stabilizes and houses the CRDMs and contains a horizontal layer of metallic, reflective insulation approximately 2 inches above the center of the RPV head. The VHP nozzles welded to the RPV head pass through the insulation layer and attach to the CRDM housings with bolted flanges. These flanges are located approximately 9 inches above the horizontal insulation layer. Details of a typical service structure, B&W RPV head insulation, and flanges are shown schematically in Figures 2-1 and 2-2.

2.2.1 Background on Alloy 600 Nozzle Cracking

Cracking of Alloy 600 nozzles (e.g., VHP nozzles, RCS nozzles, pressurizer instrument nozzles, etc.) has been occurring since the late 1980s. This operating experience pertains to both domestic and foreign PWR plants. Some of this operating experience is addressed by NRC generic communications and industry equivalents.

In 1986, the operators of a number of domestic and foreign PWR plants began reporting leaks in Alloy 600 pressurizer instrument nozzles. The NRC identified PWSCC as an emerging technical issue to the Commission in 1989 after cracking was noted in Alloy 600 pressurizer heater sleeve penetrations at a domestic PWR facility. The NRC staff determined that the cracking was not an immediate safety concern because the cracks were axial, had a low growth rate, were in a material with an extremely high flaw tolerance and, accordingly, were unlikely to propagate very far. The NRC also concluded that these factors demonstrated that any cracking would result in detectable leakage and the opportunity to take corrective action before a nozzle would fail. The NRC issued Information Notice (IN) 90-10, "Primary Water Stress Corrosion Cracking (PWSCC) of Inconel 600," dated February 23, 1990, to inform the nuclear industry of the issue.

The cracking of VHP nozzles was first observed at a French PWR, Bugey, Unit 3, in 1991. Like the pressurizer heater sleeve degradation, this cracking also involved axial through-wall cracking of an Alloy 600 nozzle, due to PWSCC, which led to leakage observed in a hydrostatic test. While not fully appreciated at the time, VHP nozzle circumferential cracking was also detected at Bugey. In 1991, as a result of the Bugey experience, the NRC implemented an action plan to address PWSCC of VHP nozzles fabricated from Alloy 600. This action plan included an NRC staff review of safety assessments conducted by the PWR owners groups (i.e., Westinghouse Owners Group, Combustion Engineering Owners Group and B&WOG). These reports addressed VHP nozzle cracking and the potential for boric acid degradation of RPV heads from leakage through the VHP nozzle cracks. The U.S. industry reports concluded that axial cracking, even if through-wall, was not highly safety significant. These reports also concluded that circumferential cracking of VHP nozzles was improbable and boric acid attack of the RPV head, if it were to occur, would be discovered through boric acid inspections well before safety margins would be compromised. In a safety evaluation dated November 19, 1993, the NRC agreed with this assessment, but reserved judgment regarding circumferential cracking on a case-by-case basis and encouraged the industry to develop enhanced VHP nozzle leakage monitoring techniques.

The U.S. industry conducted pilot inspections of VHP nozzles at three U.S. nuclear plants (ONS, Unit 2, D.C. Cook, Unit 2 and Point Beach, Unit 1) in 1994. One VHP nozzle at ONS, Unit 2 was identified as having cracks, with numerous very shallow indications. One VHP nozzle at D.C. Cook, Unit 2, showed three confirmed axial cracks, which were considerably smaller than acceptable limits (75 percent through-wall). No indications were identified at Point Beach, Unit 1. These inspections were non-visual and employed eddy current techniques.

On March 5, 1996, NEI submitted a report to the NRC, which summarized the significance of PWSCC in VHP nozzles worldwide and described the industry activities to manage the issue. This report concluded that: (1) VHP nozzle cracking by PWSCC was not an immediate safety concern; (2) internally initiated cracking in VHP nozzles would be axial; (3) external

circumferential cracking and nozzle failure would be a highly improbable event; (4) corrosion of the carbon steel head in the presence of a VHP nozzle leak was possible, but would take over 6 years before American Society of Mechanical Engineers (ASME) Code safety margins would be adversely impacted; and (5) visual inspections of RPV heads in accordance with GL 88-05 would be sufficient to detect PWSCC leakage prior to significant cracking and head corrosion. Because of the absence of an immediate safety concern with VHP nozzle cracking, the industry concluded that the issue was primarily economic and would use economic planning methods to evaluate impacts on plant operation, worker radiation exposure and maintenance costs. The NRC staff did not agree with NEI that the issue was primarily economic.

In 1997, continued NRC concern with this issue led to issuance of GL 97-01, dated April 1, 1997, which requested PWR plant licensees to inform the NRC of their plans to monitor and manage cracking in VHP nozzles and their intentions, if any, to perform non-visual, volumetric examinations of their VHP nozzles. In July 1997, the Westinghouse Owners Group, Combustion Engineering Owners Group and B&WOG submitted their generic responses to GL 97-01 on behalf of their member utilities. The generic responses ranked the potential for the VHP nozzles of their member plants to develop PWSCC. In 1998, NEI revised the rankings and developed an integrated program for inspecting the VHP nozzles. The Nuclear Energy Institute subsequently forwarded this program to the NRC for review in December 1998. In regard to implementation of this program, NEI stated that licensees of U.S. PWR plants should continue to perform required visual examinations of their RPV heads for leakage, and highly recommended that plants having the most susceptible VHP nozzles implement voluntary eddy current examinations (non-visual) of their VHP nozzles. Also, NEI stated that this program would be modified, as necessary, on the basis of the results of all examinations performed on U.S. VHP nozzles and any other pertinent information that could provide a basis for modifying the program. The NRC staff found this approach acceptable.

Generic Letter 97-01 also discussed a 1994 discovery of circumferential intergranular attack (IGA) associated with the weld between the inner surface of the RPV head and one of the VHP nozzles at Zorita, a PWR plant in Spain, which was believed to have been caused by ion exchange resin bead intrusions. Therefore, GL 97-01 requested information regarding the occurrence of resin bead intrusions in PWR plants.

Licensee inspections in response to GL 97-01 subsequently led to the discovery of extensive circumferential cracking of several VHP nozzles at ONS, Unit 3 in the spring of 2001. Prior to the discovery at ONS, Unit 3, circumferential cracking in VHP nozzles, particularly to the extent observed at ONS were considered improbable. Circumferential cracking in VHP nozzles is more safety significant than axial cracking since it creates the potential for separation of the nozzle if the cracking is severe enough. As a result of the ONS, Unit 3 cracking, the NRC issued Bulletin 2001-01 which requested licensees to address the potential for similar cracking at their plants and discuss their plans for VHP nozzle inspections. A key aspect of addressing the potential for cracking was the effectiveness of visual examinations in detecting leakage. The Electric Power Research Institute/Materials Reliability Project (EPRI/MRP) took the lead for the industry in “binning” plants by susceptibility relative to ONS. The binning was accomplished through consideration of operating time and operating temperature. The B&W units (such as ONS and DBNPS) operate with the highest RPV head temperatures and were all considered to be highly susceptible to the potential for circumferential cracking. By the end of November 2001, all but one of the other B&W units had identified circumferential cracking of VHP nozzles, while the remaining unit had identified VHP nozzle axial cracking.

On the basis of the inspection experience of the other B&W units and other operating experience, the NRC staff expectation in the fall of 2001 was that there would be a high likelihood of finding PWSCC cracking in VHP nozzles at DBNPS and other highly susceptible plants. Because DBNPS did not intend to perform the Bulletin 2001-01 recommended inspections by December 31, 2001, the NRC initiated action to prepare an immediately effective order to require DBNPS to cease power operations by December 31, 2001. The licensee provided information to justify that it was safe to operate the plant until the next scheduled refueling outage in the spring of 2002. The NRC accepted FENOC's justification to operate DBNPS only until February 16, 2002, provided that FENOC implement compensatory measures, including reducing the DBNPS head temperature, and perform volumetric examinations of 100 percent of the VHP nozzles. During subsequent inspections, DBNPS discovered VHP nozzle cracking, including through-wall cracking of several VHP nozzles. The licensee discovered a long axial crack in VHP Nozzle 3. This crack was the source of the leakage that was likely the most significant contributor to the RPV head degradation.

2.2.2 Background on Boric Acid Degradation

Borated water is used in PWR plants as a reactivity control agent to aid in control of the nuclear reaction. Typically, if leakage occurs from the RCS, the escaping coolant flashes to steam and leaves behind a concentration of impurities, including boric acid. Under certain conditions, boric acid can cause extensive and rapid degradation of carbon steel components. Such events, involving U.S. and foreign PWR plants, have been documented for more than 30 years, and led the NRC in 1988 to issue GL 88-05. This GL requested information from PWR plant licensees that would provide assurances that a program has been implemented consisting of systematic measures to ensure that boric acid corrosion does not lead to compromise of the assurance that the RCPB will have an extremely low probability of leakage, rapidly propagating failure or gross rupture. In addition, in 1995, EPRI issued the boric acid corrosion control guidebook to provide guidance to licensees on this subject.

Prior to the DBNPS VHP nozzle leakage and RPV head degradation event, there were two other significant boric acid degradation events previously at DBNPS. One of these involved the head vent flange to Steam Generator No. 2 (1993), while the other involved the pressurizer spray valve (1998). In addition to these events, the plant experienced CRDM flange leakage throughout its operating life, which resulted in the accumulation of boric acid deposits on the RPV head. At some point in the latter half of the 1990s, the combination of flange leakage and leakage through VHP Nozzle 3 caused the formation of the wastage cavity that was discovered in March 2002. As previously discussed, the mechanism for the cavity formation clearly involved corrosion due to the presence of boric acid. It is also likely that the degradation leading to the cavity formation had progressed over several years. As described elsewhere in this report, there were also indications that significant boric acid degradation was present in the DBNPS containment, most notably red/brown deposits on the containment radiation monitor filter elements and other components. As subsequently observed in videotapes documenting the condition of the RPV head from 1996 onward, the accumulation of boric acid deposits and corrosion products on the top of the RPV head (particularly in the region of VHP Nozzle 3), precluded effective visual examination for leakage from cracked VHP nozzles. Figure 2-5 shows a picture of boric acid deposits on the DBNPS RPV head flange region from Refueling Outage (RFO) 12 (2000). Figure 2-6 depicts boric acid deposits on the RPV head found during

RFO 12. This figure also depicts an area of the RPV head that is relatively free of boric acid deposits.

2.3 Applicable Regulatory Requirements

There are a number of pertinent regulatory requirements. Several provisions of the NRC regulations and plant operating licenses (technical specifications) pertain to the issue of VHP nozzle cracking, RCS leakage and boric acid corrosion. These include: the general design criteria (GDC) for nuclear power plants (Appendix A to 10 CFR Part 50), or, as appropriate, similar requirements in the licensing basis for a reactor facility; the requirements of 10 CFR 50.55a; and the quality assurance criteria of Appendix B to 10 CFR Part 50.

The applicable GDCs include GDC 14, GDC 31, and GDC 32. Criterion 14 specifies that the RCPB have an extremely low probability of abnormal leakage, of rapidly propagating failure, and of gross rupture. Criterion 31 specifies that the probability of rapidly propagating fracture of the RCPB be minimized. Criterion 32 specifies that components which are part of the RCPB have the capability of being periodically inspected to assess their structural and leak tight integrity. Plant technical specifications (TS) require no through-wall RCPB leakage. Also, there are TS requirements pertaining to identified and unidentified RCS leakage.

The NRC's regulations detailed in 10 CFR 50.55a state that ASME Class 1 components (which include VHP nozzles) must meet the requirements of Section XI of the ASME Boiler and Pressure Vessel Code. Table IWB-2500-1 of Section XI of the ASME Code provides examination requirements for VHP nozzles and references IWB-3522 for acceptance standards. Table IWB-2500-1, also requires that RCS leakage tests at nominal operating pressure be conducted prior to plant startup following each reactor refueling outage. Article IWA 5241 requires a direct visual examination, known as a VT-2, of the accessible external exposed surfaces of pressure retaining components for evidence of leakage from non-insulated components. Regarding insulated components, IWA-5242 states that VT-2 examinations may be conducted without removing insulation by examining the accessible and exposed surface and joints of the insulation.

Figure 2-1 TYPICAL PWR REACTOR

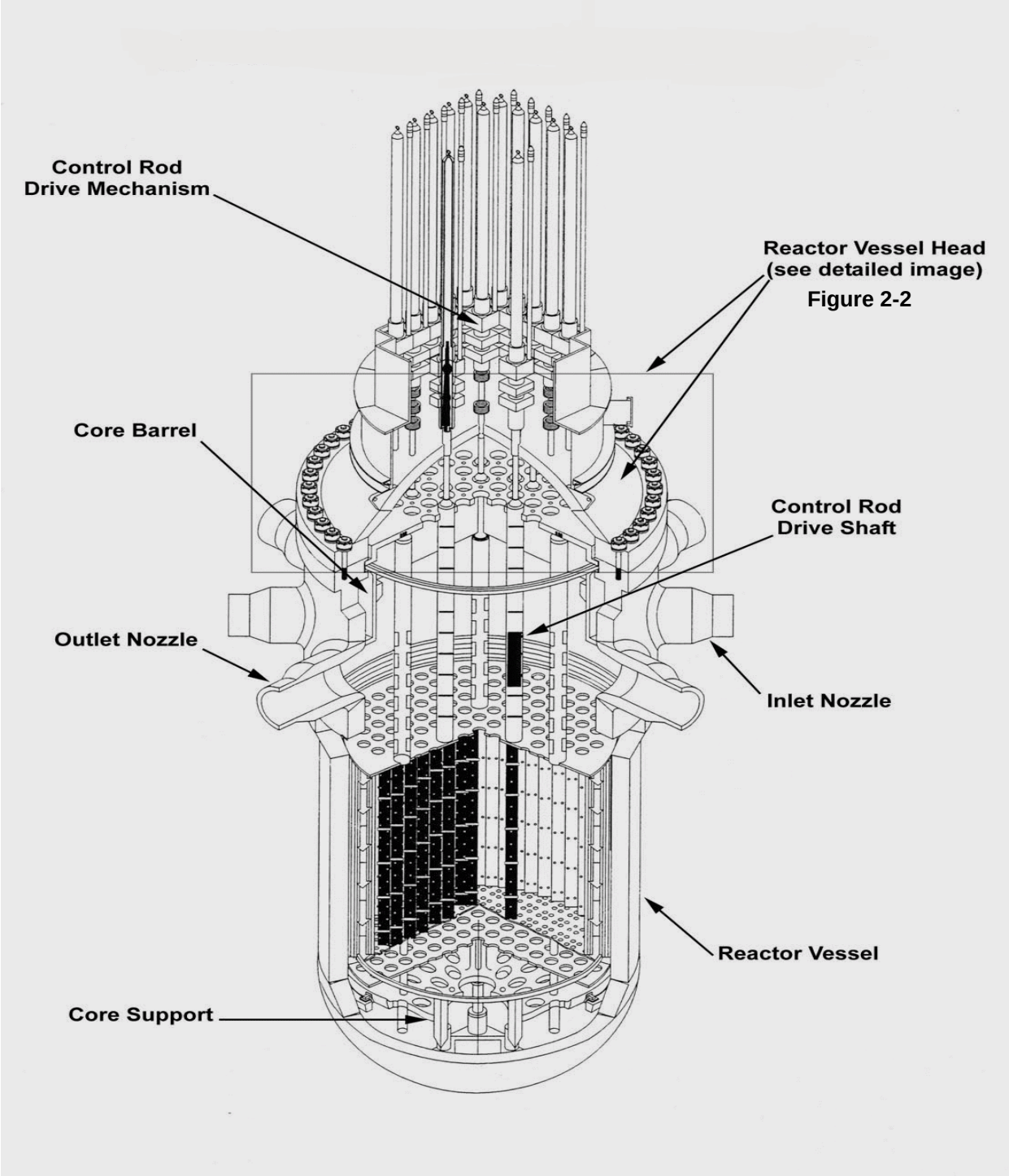

Figure 2-2 **SCHEMATIC VIEW OF TYPICAL B&W RPV HEAD**

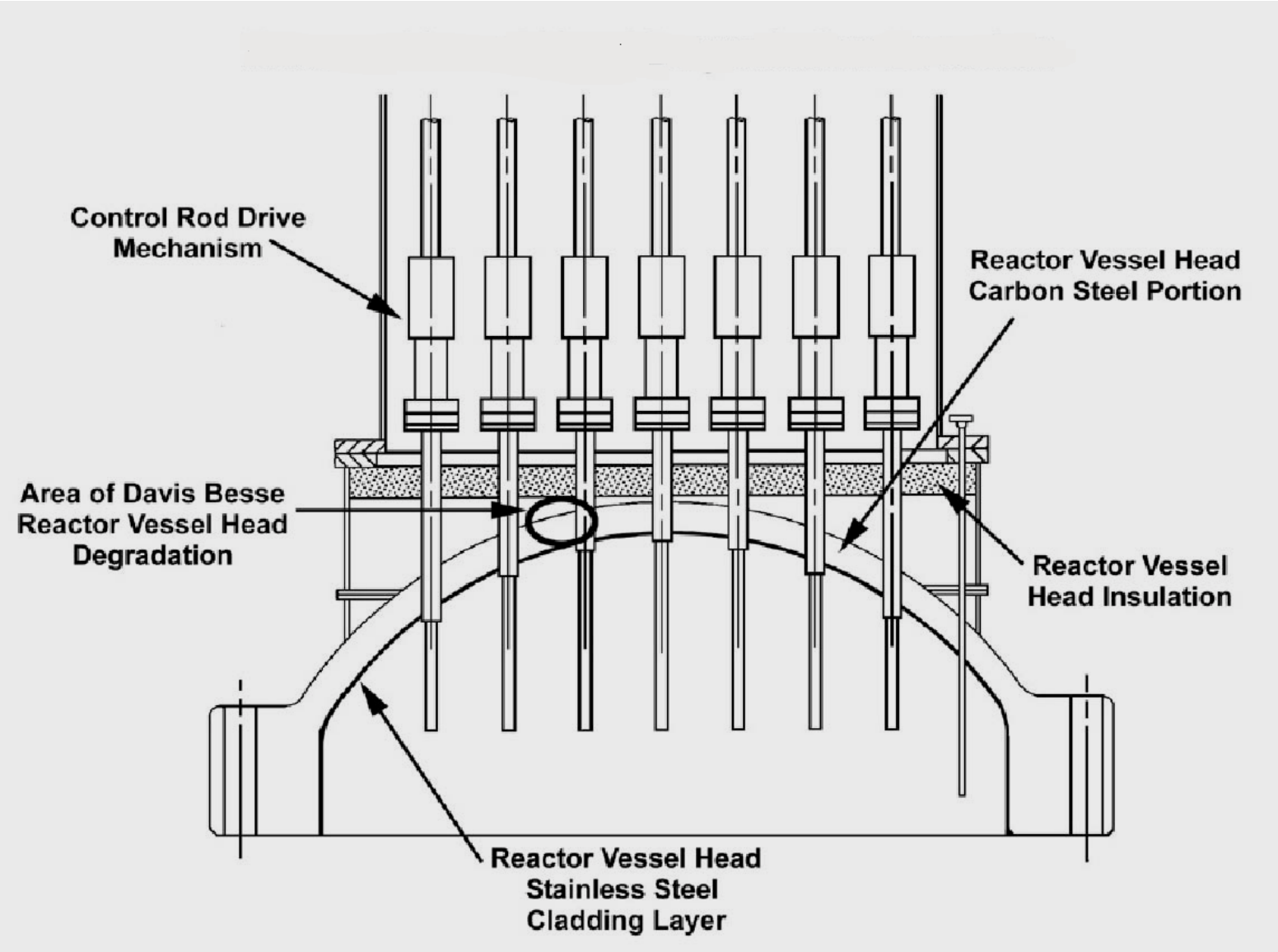

Figure 2-3 SCHEMATIC VIEW OF TYPICAL B&W VHP NOZZLE

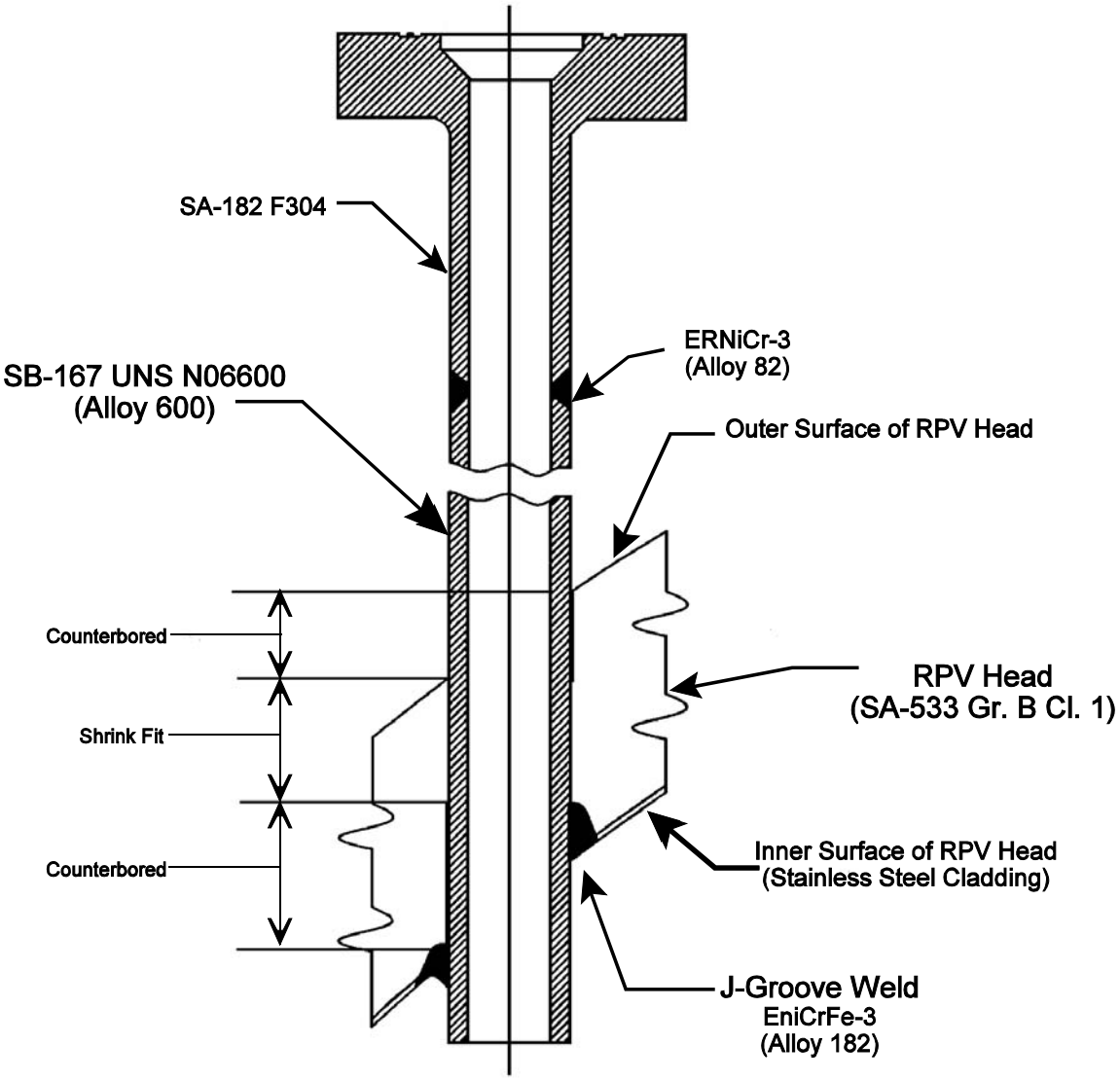

Figure 2-4
DBNPS VHP NOZZLE NO.3 DEGRADATION CAVITY

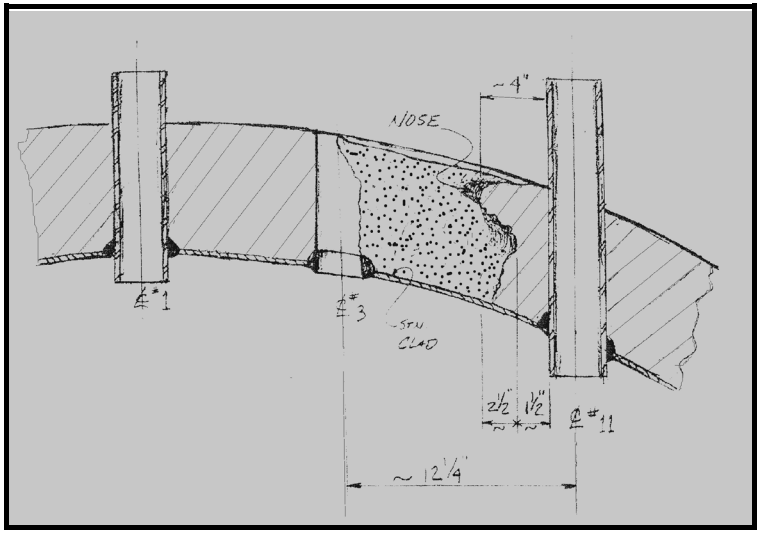

Degradation Between Nozzle#3 and Nozzle#11.
The Sketch Provided by the Licensee

Nozzle #3 Area Cut Away From Reactor Head

Close-Up View of Cavity

Rubberized Impression of Cavity

Figure 2-5 BORIC ACID DEPOSITS ON RPV HEAD FLANGE

Refueling Outage 12 (2000)

Figure 2-6 BORIC ACID DEPOSITS ON THE RPV HEAD (top) AND AREA RELATIVELY FREE OF DEPOSITS (bottom)

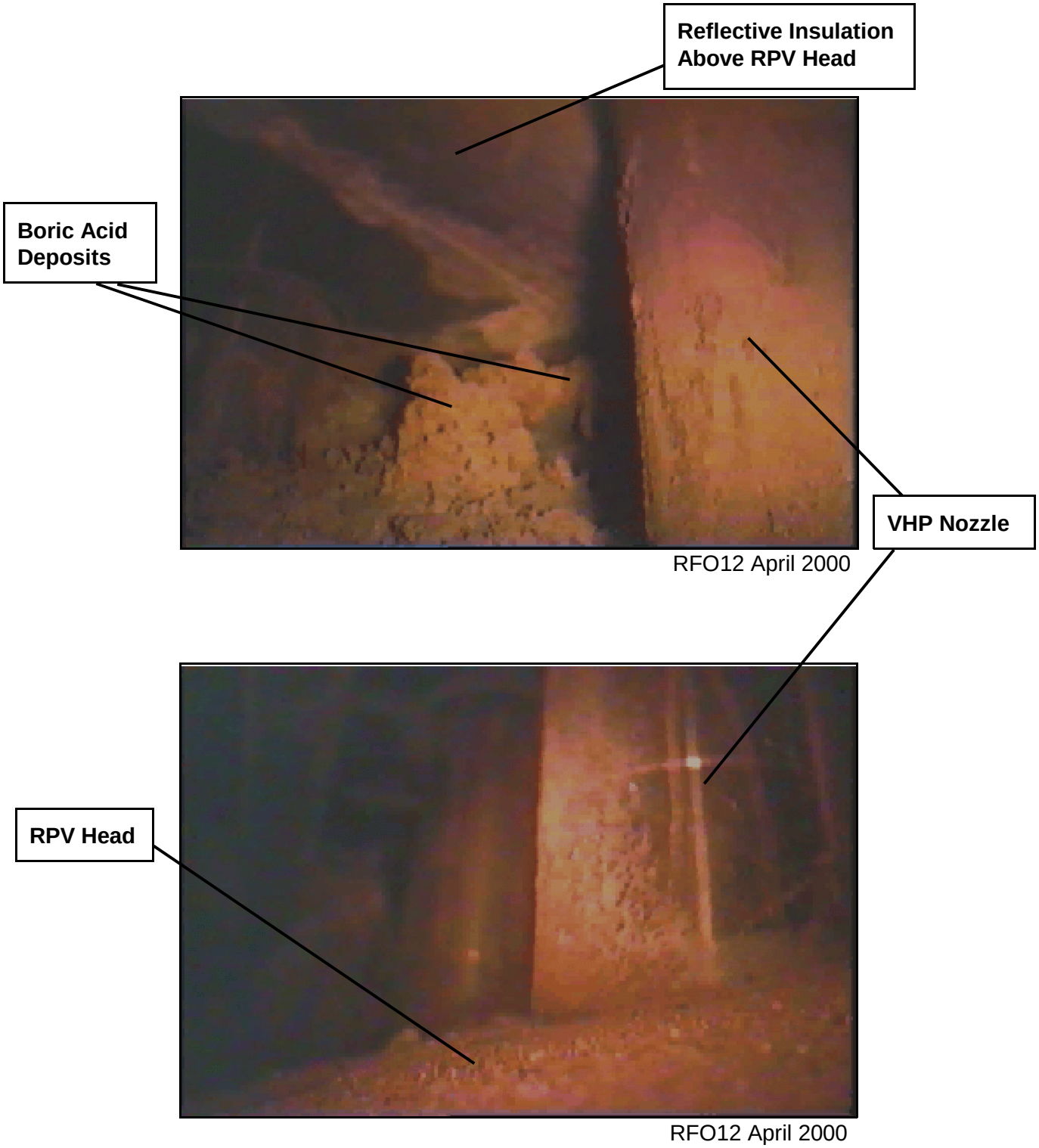

3. REVIEW RESULTS AND RECOMMENDATIONS

About 10 years ago, the NRC and industry recognized the potential for an event such as the one that occurred at DBNPS. In spite of the wealth of information, which includes extensive foreign and domestic PWR plant operating experience, as well as research activities involving tests and engineering analyses, the DBNPS event occurred. Events involving the material wastage of components stemming from primary system leaks have been reported for more than 30 years. For more than 15 years, Alloy 600 nozzle leakage events in U.S. PWR plants have been reported. In 1993, the industry and NRC specifically addressed the possibility of extensive RPV head wastage stemming from undetected VHP nozzle leaks involving axial cracking caused by PWSCC. The industry concluded and the NRC agreed that the likelihood of such an event was low because VHP nozzle leaks would be detected before significant RPV head degradation could occur.

The task force concluded that the DBNPS VHP nozzle leakage and RPV head degradation event was preventable. The task force focused on understanding why the event was not prevented. While this focus was primarily introspective, this question could not be answered without considering industry activities and DBNPS's performance. The task force concluded that the event was not prevented because: (1) the NRC, DBNPS, and the nuclear industry failed to adequately review, assess, and followup on relevant operating experience; (2) DBNPS failed to assure that plant safety issues would receive appropriate attention; and (3) the NRC failed to integrate known or available information into its assessments of DBNPS's safety performance.

Because the NRC and nuclear industry concluded that Alloy 600 VHP nozzle cracking was not an immediate safety concern, the NRC and the industry's efforts to further evaluate this issue became protracted. Also, the NRC and industry continued to rely on visual inspections of VHP nozzles, which are incapable of characterizing the extent of nozzle cracking and damage. They are only effective at detecting cracks which have progressed to the point of leakage. While the industry initiated actions to improve non-visual inspection capabilities, the requirements governing inspections remained unchanged.

The NRC recognized that some affected PWR plants could potentially operate with small leaks which would not be detected by GL 88-05 walkdowns. Rather than adopt an approach of leakage prevention, the NRC focused on measures intended to enhance licensee capabilities to detect small VHP nozzle leaks. Because of this, the NRC believed it was prudent for the industry to consider implementing an enhanced leakage detection method for detecting small leaks during plant operation. Leakage detection would serve as a means of providing defense-in-depth to account for any potential uncertainties in the industry analysis that GL 88-05 walkdown inspections would be an effective means of detecting VHP nozzle leaks before significant degradation could occur. However, PWR plant licensees have not installed enhanced leakage detection systems designed to detect VHP nozzle leaks.

For more than 30 years, there have been boric acid corrosion events in spite of a significant amount of information that has been broadly disseminated on the subject. The licensee for DBNPS, as well as the NRC, failed to learn a key lesson from this experience. Specifically, predictions regarding boric acid-induced corrosion rates for in-plant boric acid leaks have not been reliable in all cases. Operating experience reveals instances in which corrosion rates

were significantly underestimated for identified boric acid leaks because of erroneous assumptions regarding the nature of the leakage, environmental conditions, the relationship between the actual leakage and experimental data, or other factors. As a consequence, in some instances, carbon steel components have corroded to a greater extent than anticipated. A number of these events occurred even though the underlying leakage had been previously identified by licensees, as they deferred material wastage assessments and repairs on the basis that the corrosion rates would be inconsequential. At least two such events occurred at DBNPS prior to discovery of the RPV head degradation.

The NRC and the industry regarded boric acid deposits on the RPV head as an issue that required attention. However, the NRC and industry did not regard the presence of the boric acid deposits on the RPV head as a significant safety concern because they expected that boric acid crystals would form from flashing steam and such crystals would not cause significant corrosion of RPV heads. The NRC and industry were concerned that the presence of boric acid deposits, from CRDM flange leakage in the case of B&W PWR plants, could obscure the indications of VHP nozzle leakage. While dry boric acid crystals would not be expected to result in significant corrosion rates, representative testing of nozzle leakage indicated that corrosion rates from boric acid solutions could be in the range of 4 inches per year. These rates of corrosion could occur at primary system leakage rates that are significantly lower than the typical PWR plant TS limit, namely, at a rate too small to directly measure with the current leakage detection systems. Even at somewhat lower rates of corrosion, properly implemented GL 88-05 programs may not lead licensees to detect VHP nozzle leaks before significant degradation could occur. The results of these tests, while known within the NRC, were not widely recognized by the NRC staff.

The recurring nature of Alloy 600 nozzle cracking and boric acid corrosion events indicates that industry actions, in general, and DBNPS's actions, in particular, were less than adequate. Similarly, given that the NRC has issued multiple generic communications addressing these two issues, the recurring nature of these events also indicates that NRC failed to effectively review, assess, and followup on relevant operating experience. Section 3.1 provides the basis for this conclusion.

The NRC's AIT concluded that DBNPS's staff missed several opportunities to identify the boric acid corrosion of the RPV head at an earlier time. In the task force's view, the DBNPS staff missed these opportunities because DBNPS failed to assure that plant safety issues would receive appropriate attention. Section 3.2 provides the basis for this conclusion.

The NRC missed prior opportunities to have identified the VHP nozzle leaks and the RPV head degradation. In the task force's view, the NRC failed to integrate known or available information into its safety assessment of DBNPS. Other influences involving requirements and guidance, resources and staffing, the quality of licensee information, and licensing activities, contributed to the NRC's failure to identify the VHP nozzle leaks and the RPV head degradation. Section 3.3 provides the basis for this conclusion.

Sections 3.1 through 3.3 and Appendix A describe the task force's recommendations to address the identified issues. Figure 3-1 depicts a time line of significant items of interest.

Figure 3-1 Time Line Relating Significant Items of Interest

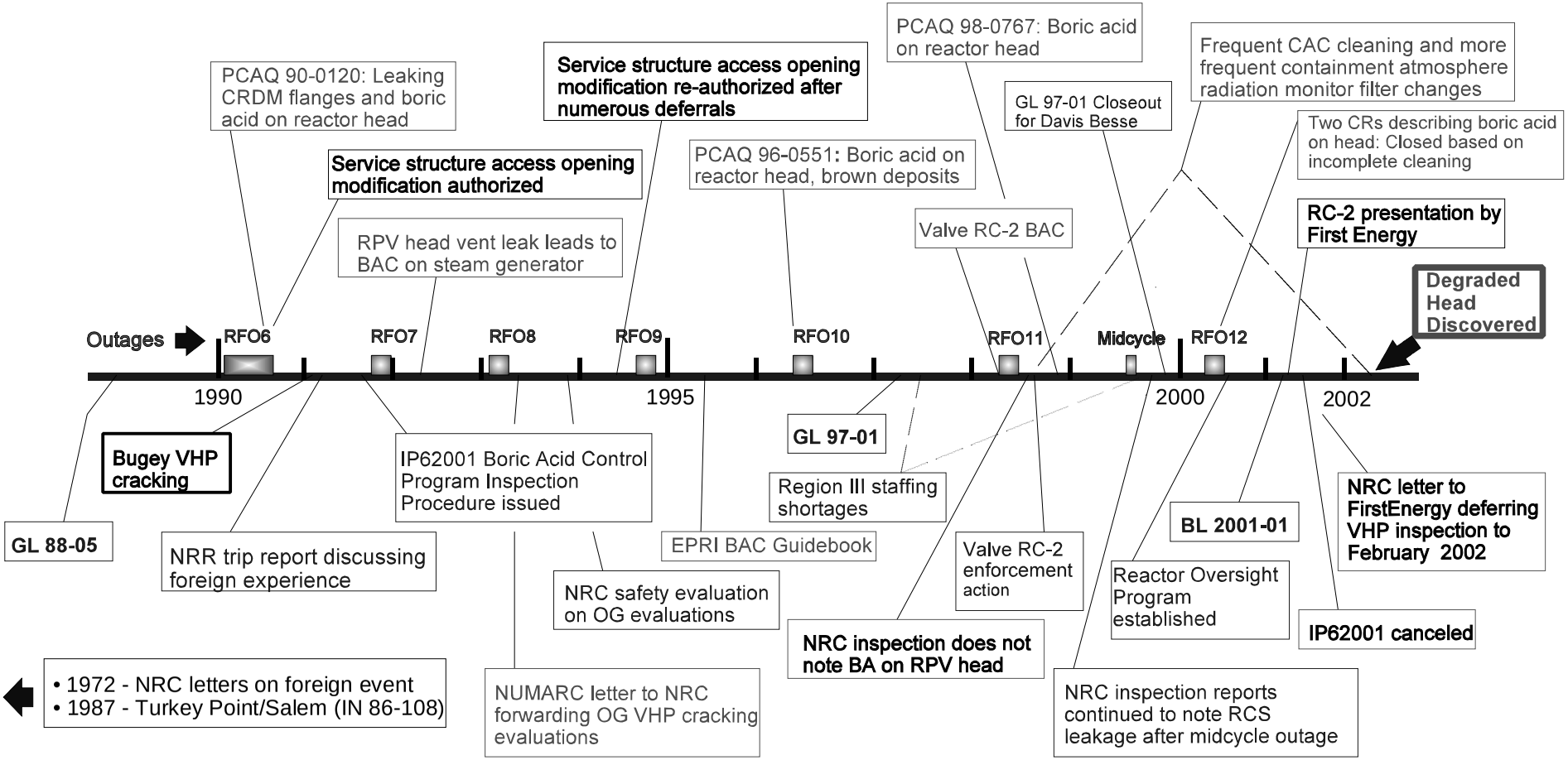

IN (Information Notice) 86-108, "Degradation of Reactor Coolant System Pressure Boundary Resulting from Boric Acid Corrosion"
GL (Generic Letter) 88-05, "Boric Acid Corrosion of Carbon Steel Reactor Coolant Pressure Boundary Components in PWR Plants"
GL 97-01, "Degradation of Control Rod Drive Mechanism Nozzle and Other Vessel Closure Head Penetrations"
BL (Bulletin) 2001-01, "Circumferential Cracking of Reactor Pressure Vessel Head Penetration Nozzles"

PCAQs (Potential Condition Adverse to Quality) and **CRs** (Condition Reports) are issued by the licensee.

BA - Boric Acid
BAC - Boric acid corrosion
CAC- Containment air cooler
CRDM - Control rod drive mechanism
EPRI - Electric Power Research Institute
NRR - Office of Nuclear Reactor Regulation
NUMARC - Nuclear Management and Resource Council
OG - Owners Group
RCS - Reactor coolant system
RFO- Refueling outage
RPV - Reactor pressure vessel
VHP - Vessel head penetration

3.1 NRC and Industry Review, Assessment, and Followup of Operating Experience

As discussed in detail in Appendix E, "Primary System Leakage and Boric Acid Corrosion Operating Experience at U.S. Pressurized Water Reactors (1986-2002)," there have been many boric acid leakage and boric acid corrosion events that have occurred over a prolonged period, in spite of the NRC issuing numerous generic communications. There were numerous events documented in licensee event reports (LERs) submitted to the NRC, including events involving leakage from pressurizer (PZR) instrumentation penetrations, PZR heater sleeves, RCS instrumentation penetrations, VHP nozzles, and CRDM flanges. These LERs also documented events involving excessive boric acid corrosion of fasteners on valves, pump casings, primary system piping, and miscellaneous component parts. In addition to numerous primary system leaks, there have been PZR vessel base metal wastage events and RPV head wastage events. While there have been multiple NRC reportable events involving Alloy 600 nozzle leaks, none of these previous events resulted in significant boric acid-induced corrosion.

The recurring nature of these events generally indicates a lack of effectiveness of industry corrective actions in these areas. The DBNPS event also indicates that DBNPS failed to effectively implement its operating experience review program (refer also to Section 3.2.4). In addition, the NRC failed to adequately review, assess, and followup on relevant operating experience to bring about the necessary industry and plant specific actions to prevent this event. While much was known within the NRC about Alloy 600 nozzle cracking and boric acid corrosion, other important details associated with these two issues, such as the number of Alloy 600 nozzle cracking events, as well as insights from foreign operating experience and domestic research activities, were not widely recognized or were viewed as not being applicable. The NRC accepted industry positions regarding the nature and significance of VHP nozzle cracking without having independently verified a number of key assumptions, including the implementation effectiveness of GL 88-05 programs and enhanced visual inspections of RPV heads. None of the NRC's previously identified generic issues pertained directly to either the VHP nozzle cracking or boric acid corrosion; however, one generic issue pertained, in part, to boric acid corrosion of fasteners. This generic issue was classified as resolved in 1991. The NRC scope of operating experience reviews changed significantly over the past several years to gain efficiencies, such as eliminating unnecessary overlap and duplication of review scope. The NRC assessed its operating experience review processes in 1994 and again in 1998; however, these reviews were focused primarily on achieving efficiency.

3.1.1 Significant Operating Experience Involving Boric Acid Leakage and Corrosion

The task force reviewed operating experience relevant to boric acid leakage and corrosion in PWR plants for the period from 1986 through the first quarter of 2002. Licensee event reports were the basic source of boric acid leakage and boric acid corrosion events. Two additional events were added to the database because they involved boric acid leakage and RPV head wastage, but were not recorded in an LER. This information was entered in a database which was then sorted to determine any trends and patterns. An analysis of this operating experience is contained in Appendix E to this report. For the period of interest, 73 PWR plants were included in the sample. Each operating experience document may have discussed more than one component, system, or was applicable to more than one unit. Besides listing the component that was affected by the boric acid leak, other information was sorted by NSSS

designer, design type, plant operating age, number of operating years at the time of the event report, and year of occurrence. As seen in this report, age and material condition of power plants were significant factors.

The task force reviewed NRC generic communications relevant to boric acid issues that were issued since 1980 to determine what guidance was provided to the industry, and whether or not this guidance was utilized by DBNPS. In addition to data obtained in LERs, NUREGs (NRC technical reports) have also been issued dealing with boric acid corrosion and cracking of Alloy 600 nozzles.

Alloy 600 nozzle cracking in primary system components has not been sufficiently assessed by the NRC staff to determine whether additional regulatory action, such as the issuance of additional generic communications, is needed. The task force review found many examples of RCS penetrations that are susceptible to degradation similar to VHP nozzle penetrations (refer to Appendix E). Examples include: (1) PZR heater penetrations; (2) lower RPV head penetrations; and (3) thermowell penetrations that have or could have (by virtue of composition, construction, and operating environment) exhibited cracks and leakage. Discussions with NRC staff revealed that these specific insights were not generally known even though there was some general level of awareness of a particular issue (e.g., Alloy 600 RCS instrument nozzle cracking in Combustion Engineering plants) or specific knowledge of a particular event. If these insights had been recognized, then there would have been additional opportunities to notify PWR plant licensees through the generic communications process that corrective action was needed. For example, in the mid to late 1990s, no NRC generic communications were issued to PWR licensees to inform them of multiple instances of Alloy 600 RCS instrument nozzle cracking that were occurring primarily in Combustion Engineering (CE) PWR plants.

3.1.1.1 Detailed Discussion

The task force identified a number of issues involving Alloy 600 nozzle cracking and boric acid corrosion pertaining primarily to B&W and CE plants. Appendix E provides additional insights, including those involving Westinghouse plants. The task force made the following specific observations:

(1) Babcock and Wilcox and CE plants appear to be highly susceptible to boric acid leakage and corrosion. One hundred percent of B&W plants have reported boric acid leakage related problems. Given the high incidence rate of boric acid leakage problems at B&W plants, DBNPS should have been alerted and taken appropriate corrective actions prior to the discovery of the leaking VHP nozzles and degraded RPV head.

(2) Babcock and Wilcox designed plants dominated CRDM leakage. There were 15 documents relating to CRDM leakage, of which 9 occurred at B&W plants. When considering that B&W plants make up less than 10 percent of the plants within the sample of 73 PWR plants, the B&W plants are greatly over-represented. The types of boric acid leakage events occurring at B&W plants include VHP nozzles (dominant failure), and CRDM flanges and fasteners. Combustion Engineering plants were second to B&W plants, with three reports documenting boric acid leakage of CRDM seal housings.

(3) There was an extensive history of VHP nozzle cracking and leakage at B&W plants. As a group, B&W plants have had 6 percent of their VHP nozzles develop through-wall cracks.

One hundred percent of B&W plants have experienced axial VHP nozzle cracks, and 86 percent of B&W plants have experienced circumferential cracking in at least one VHP nozzle. A greater percentage of RPV head central nozzles have cracked than the percentage of peripheral nozzles. The DBNPS and NRC staffs believed that the peripheral nozzles were more likely to crack because of greater stresses. The average number of operating years prior to VHP nozzle cracking and leakage discovery ranged between 17 and 27 years. DBNPS was the last B&W unit to report cracking and leakage (February 2002). On the basis of information gathered from DBNPS, DBNPS could have identified VHP nozzle cracking and leakage as early as 1996 (refer to Section 3.2.2). As shown from the operational experience data, DBNPS was within the average operating time period to expect VHP nozzle cracking and leakage. The industry average operating time for VHP nozzle leakage is 21.6 years.

(4) DBNPS was at least the third U.S. nuclear plant to report RPV head wastage caused by boric acid-induced corrosion. Two previous events include the Turkey Point, Unit 4 event (March 1987), and the Salem, Unit 2 event (August 1987). Both of these events were documented in Supplements to IN 86-108, "Degradation of Reactor Coolant System Pressure Boundary Resulting From Boric Acid Corrosion." The Turkey Point, Unit 4 and Salem, Unit 2 events and their lessons-learned from 1987 should have been an indicator to DBNPS that RPV head wastage from boric acid accumulation was possible, and should have been included in their boric acid corrosion control program. Information gained through interviews of the DBNPS and NRC staff indicated that a mind set had developed that boric acid corrosion on the RPV head would not result in significant wastage because of the elevated temperature of the RPV head, resulting in dry boric acid deposits. Given this mind set, there was a presumption that boric acid deposits would not be a concern because the corrosion rates would be extremely low. However, a review of the operating experience revealed a number of events in which expected dry boric acid deposits contained wet boric acid solutions, which resulted in more degradation than anticipated. This indicates that one of the past lessons, i.e., the inability to predict environmental conditions, particularly inside the containment building, was forgotten or never fully appreciated.

(5) There have been three events involving PZR vessel wastage stemming from Alloy 600 PZR heater sleeve leakage. All of these events have occurred at CE plants (ANO, Unit 2 and San Onofre Nuclear Generating Station (SONGS), Units 2 and 3).

(6) Combustion Engineering plants dominated PZR instrumentation nozzle leakage. Seven of nine PZR instrumentation nozzle leakage events occurred at CE plants. Most of the events involved PZR level instrumentation. Most (five of nine) of the PZR instrumentation events occurred between 11 and 14 years of plant operation.

(7) Combustion Engineering plants accounted for all (seven of seven) reported PZR heater sleeve leakage events. The event that occurred at Calvert Cliffs, Unit 2 was extensive, involving 28 of 120 leaking sleeves. Leaking boric acid associated with the Calvert Cliffs event also resulted in corrosion damage to the carbon steel base metal of the PZR. Other events involving PZR heater sleeves were less severe. The task force noted that the Calvert Cliffs experience was documented in IN 90-10, which was the first generic communication issued by the NRC relative to Alloy 600 PWSCC.

(8) Combustion Engineering plants dominated RCS instrumentation nozzle leakage, accounting for 10 of 13 events. In addition, most of the events involved more than one leaking nozzle. The review also shows that most of the events involved hot leg nozzles. Nine of the 13 instrumentation nozzles occurred between 11 and 16 years of plant operation. Most of the nozzle cracking was also attributed to PWSCC.

3.1.1.2 Recommendations

To address the issues discussed in this section of the report, the task force made the following recommendation:

(1) The NRC should assemble foreign and domestic information concerning Alloy 600 (and other nickel based alloys) nozzle cracking and boric acid corrosion from technical studies, previous related generic communications, industry guidance, and operational events. Following an analysis of nickel based alloy nozzle susceptibility to stress corrosion cracking (SCC), including other susceptible components, and boric acid corrosion of carbon steel, the NRC should propose a course of action and an implementation schedule to address the results.

3.1.2 Generic Communication Program Implementation

The task force identified a number of implementation problems involving NRC identification of operating experience, and the followup of information, actions, or recommendations provided to licensees in NRC generic communications regarding primary system leakage and boric acid corrosion. Sufficient information was issued by the NRC to alert licensees to the potential for boric acid corrosion of carbon steel components; however, since the early 1980s, there have been numerous events involving primary coolant leakage in PWR plants. These primary system leaks have occurred because of SCC of materials or component failures stemming from other causes. In a number of instances, these leaks have subsequently led to material wastage. While some of these events formed the basis for NRC generic communications, many other events occurred during periods in which no NRC generic communications were issued. The NRC infrequently used its boric acid corrosion control program inspection procedure (IP) that was developed in response to GL 88-05. It was never implemented at DBNPS, and it was subsequently canceled in 2001. Other problems include: (1) not verifying licensee actions or information in response to significant generic communications; (2) not providing internally consistent processes for the treatment of generic safety issues; (3) not assessing industry information previously challenged by the NRC staff; (4) not assessing generic communication effectiveness following the issuance of repetitive generic communications; and (5) not placing the appropriate emphasis or context on information documented in generic communications.

3.1.2.1 Detailed Discussion

The task force identified a number of issues involving: (1) the effectiveness of multiple generic communications pertaining to Alloy 600 nozzle cracking and boric acid-induced corrosion; (2) an absence of generic communications during discrete periods; (3) implementation of boric acid corrosion control and operating experience review inspection guidance; (4) verification of the effectiveness of actions taken in response to GL 88-05 and GL 97-01; (5) review of an

industry economic model pertaining to VHP nozzle inspections; (6) closeout of GL 97-01; (7) scope of Bulletin 2001-01; (8) verification of DBNPS's submissions relative to Bulletin 2001-01; (9) NRC process requirements for the treatment of generic safety issues; (10) information provided in some subject generic communications; and (11) verification of owners group activities. The task force made the following specific observations:

(1) The recurring nature of boric acid leakage and corrosion events in light of the relatively high number of issued generic communications indicates that NRC and industry actions have not been effective. During the period 1980 through the first quarter of 2002, 17 NRC generic communication documents have been issued (including supplements) by the NRC involving boric acid leakage or corrosion caused by boric acid deposits (refer to Appendix E for a complete listing of applicable NRC generic communications). All of these documents (information notices, bulletins, and generic letters) were issued to provide information to the industry and the public concerning events of interest. Some of the NRC generic communication documents (bulletins and generic letters) requested that the addressees provide information to the NRC regarding conditions at their facilities, the existence (or non-existence) of certain programs, corrective action implementation status, and inspection status and findings. Many of the issued generic communications have alerted DBNPS and the industry to conditions that ultimately resulted in the severe corrosion of the RPV head at DBNPS. The NRC assessed its operating experience review processes twice in the past eight years (refer to Section 3.1.6); however, these reviews have been primarily focused on efficiency.

(2) A review of LERs involving boric acid leakage and corrosion shows that several years elapsed (with relatively high numbers of primary system leakage or boric acid corrosion events) with no related generic communications being issued by the NRC. For example, during the period 1989 through 1994, two INs were issued (IN 90-10 concerning PWSCC of Alloy 600, and IN 94-63 concerning boric acid corrosion of a pump casing). For the period 1998 through 2000, no generic communications were issued involving boric acid leakage and corrosion. Appendix E provides examples of events occurring during these periods, including steel containment vessel corrosion, multiple examples of fastener corrosion, tubing and piping failures, leaking penetrations, leaking CRDM housings, leaking PZR heater sleeves, and leaking Alloy 600 RCS instrument nozzles (which are not within the scope of GL 97-01).

Also occurring during this period was the packing leak of the DBNPS pressurizer spray valve, which resulted in a stand-down meeting, significant training on boric acid corrosion, programmatic changes, and NRC escalated enforcement action. Because of the impact of the pressurizer spray valve (RC-2) event, DBNPS made a subsequent presentation to the Electric Power Research Institute (EPRI) in 2001 on the significance of boric acid corrosion, which identified essentially the same causal factors that pertain to the VHP nozzle leakage and RPV head degradation event (refer to Section 3.2.4).

The Institute of Nuclear Power Operations (INPO) issued 18 documents from 1981 through 2002, mostly addressing the corrosive nature of boric acid and provided examples of extended outages to repair corrosion damage. In 1993, a detailed account of the Bugey, Unit 3 VHP nozzle crack was provided to PWR plant operators. It discussed the full visual RPV head inspection, installation of insulation that permitted a leak detection system, and the performance of eddy current inspections. The 1993 document concluded

with a request that PWR plant operators examine their inservice inspection (ISI) program and determine additional methods for detecting and monitoring RCPB cracking.

(3) The NRC inspection procedures issued to evaluate the effectiveness of licensees' boric acid corrosion control programs and programs to assess and feed back to plant staff operational experience information pertinent to plant safety were not effectively implemented. For example, IP 62001, "Boric Acid Corrosion Prevention Program," was issued in August 1991 as a follow-on NRC action to GL 88-05 to verify: (1) that licensees had a boric acid program; (2) that procedural guidance to implement the program was adequate; and (3) that the licensee was implementing its program. Inspection Procedure 62001 was subsequently canceled in 2001 because it was infrequently implemented. Similarly, IP 90700, "Feedback of Operational Experience Information at Operating Power Reactors," was also originally issued in August 1991, and subsequently canceled in 2001 because it was infrequently implemented. Neither IP 62001 nor IP 90700 was performed at DBNPS. If these inspections had been performed, then discovery of implementation weaknesses may have led to programmatic and plant changes.

(4) The NRC closeouts of GL 88-05 did not fully assess the implementation of DBNPS's actions taken in response to the GL, nor did the NRC sufficiently monitor licensee implementation following issuance of the closeout letter. A temporary instruction (TI) to verify licensee action was not issued to support implementation or closeout of GL 88-05. NUREG/CR-5576, "Survey of Boric Acid Corrosion of Carbon Steel Components in Nuclear Plants," issued in 1990, recorded the review of licensee responses to GL 88-05 and it documented the results of boric acid corrosion control program audits conducted by the NRC at 10 PWR facilities including DBNPS. Eight of the 10 plants audited were rated "Satisfactory." Two plants were rated "Good." None of the plants audited were rated "Excellent." The NRC audit was conducted by NRC staff with contractor support. The audit focused on reviews of program documents and discussions with plant personnel. The auditors toured accessible areas. DBNPS's program was determined to be satisfactory, but enhancements to address two weaknesses were recommended: (1) that formal training be provided for personnel conducting boric acid inspections; and (2) that inspections be formally documented. The NRC did not conduct a followup verification to determine if the suggestions were implemented. Additionally, the licensee could find no evidence that it implemented any actions to address these two areas. As discussed in detail in Section 3.2.2, the DBNPS boric acid corrosion control program was lacking in scope, assessment, and followup from its initial issuance in 1989 to present.

(5) The NRC did not effectively assess the use of an industry economic model involving VHP nozzle inspection activities related to GL 97-01. In 1996, NEI issued a document that included a discussion about an economic model that licensees could use to aid decision making related to VHP nozzle inspection and repairs. The NRC discussed this model in GL 97-01, disagreeing with NEI that economic factors were a primary consideration of the VHP nozzle cracking issue. However, the task force found no information to indicate that the staff reviewed the model, and it found no information to indicate that the industry changed its position relative to the GL 97-01 statement. On the basis of interviews with DBNPS personnel, it appears that the licensee inappropriately emphasized economic factors associated with RPV head cleaning, RCPB leak detection and correction, and VHP nozzle degradation issues. The industry emphasis of economic factors, as evidenced by

providing licensees with economic analysis "tools," may have influenced the approach taken by DBNPS and, in turn, contributed to the 2002 event.

(6) The NRC closeouts of GL 97-01 did not fully assess the implementation of the GL actions at DBNPS, nor did the NRC sufficiently monitor licensee implementation following issuance of the closeout letter. A TI was not issued to inspect the implementation effectiveness of licensee actions. The closeout determination of GL 97-01 for DBNPS was made on the basis of the B&WOG's generic program and FENOC's adoption of the program. Further, the NRC closeout did not indicate that any independent verification of the DBNPS program was considered. The closeout letter (dated November 29, 1999) was prepared using guidance issued in a memorandum, dated June 14, 1999. The memorandum provided form letters for use as the basis for the NRC responses. The closeout letter for DBNPS closely followed the format of the form letter. It refers to licensee responses to NRC requests for additional information; however, plant-specific information is not discussed in any detail. The closeout also discussed generic submissions made by NUMARC and the B&WOG.

There was a significant omission from the DBNPS GL 97-01 closeout letter in that it did not address the issue of IGA that could result from resin intrusion into the RCS. Intergranular attack was discussed in the description of the Zorita event included in GL 97-01. DBNPS had a purification demineralizer failure resulting in a resin burst event during a plant shutdown on April 10, 1998. Resin beads clogged the downstream filters and a loss of letdown occurred. As discussed in NRC Inspection Reports 50-346/98005 and 50-346/98007, operations activities caused some resin transport downstream of the filters. One report indicated that plant operators prevented resin intrusion into the RCS, but this was not substantiated in the report details section. As discussed in GL 97-01, resin intrusion into the RCS can cause IGA and cracking of Alloy 600 nozzles. The GL 97-01 closeout letter should have addressed the DBNPS resin intrusion event and whether there was a potential for IGA at DBNPS.

The NRC Project Manager's Handbook, Section 2.4, includes guidance on responses to licensees concerning generic communications. The Handbook discusses generic communications followup to be conducted by the project manager (PM):

> . . . there are some cases where the staff intentionally does not perform a detailed review in response to certain Bulletins, Generic Letters, etc. For these issues, the staff must ensure that the requested actions are adequately addressed by the licensee. The PM subsequently sends the licensee an acknowledgment letter, with a caveat stating that the licensee's response may be subject to future inspection or auditing. In these cases, a large part of the staff's basis for the acknowledgment closeout letter is the future inspection of all plants (or a sample of plants).

The closeout for GL 97-01 at DBNPS did not include the caveat regarding future NRC inspections or auditing, and no inspections of GL 97-01 were performed.

(7) The identification of Alloy 600 VHP nozzle cracking and leakage was identified more than 10 years ago; however, until the DBNPS event occurred, the generic communications issued have not resulted in substantive industry-wide actions to prevent Alloy 600 VHP

nozzle cracking and leakage. This calls into question the effectiveness of the process as a catalyst for addressing issues. For example, GL 97-01 requested licensees to provide a description of all inspections of VHP nozzles performed to date, including the results of those inspections, and if a plan had been developed to periodically inspect the VHP nozzles. Affected licensees were to provide: (1) the inspection schedule and its technical basis; (2) the scope for VHP nozzles including the total number of penetrations, which penetrations had thermal sleeves, which were spares, and which were instrument or other penetrations; and (3) a description of any resin bead intrusions. DBNPS had not planned on performing detailed inspections of the VHP nozzles suggested in 1997 until RFO 13 in 2002.

Developed approximately four years after GL 97-01, Bulletin 2001-01 requested essentially the same information as GL 97-01 relative to PWSCC of VHP nozzles; although, the focus was on circumferential cracking. Bulletin 2002-01, "Reactor Pressure Vessel Head Degradation and Reactor Coolant Pressure Boundary Integrity," was issued to inform licensees of RPV head degradation at DBNPS. Bulletin 2002-01 requested licensees to provide information: (1) related to the integrity of the RCPB, including the RPV head and the extent to which inspections have been undertaken; (2) the basis for concluding that plants satisfy applicable requirements; and (3) that future inspections will ensure continued compliance with regulatory requirements.

(8) The scope of NRC followup inspections for Bulletin 2001-01 was not comprehensive. Bulletin 2001-01 requested licensees to provide information related to the structural integrity of the VHP nozzles including the extent of nozzle leakage and cracking that had been found, the inspections and repairs that had been undertaken, and the basis for concluding that their plans for future inspections will ensure compliance. A TI was developed for this bulletin, but it did not address boric acid issues.

(9) The NRC questioned the information provided by DBNPS in its submissions to the NRC in response to Bulletin 2001-01; however, the NRC staff did not independently review and assess information pertaining to the results of past RPV head inspections and VHP nozzle inspections. Similarly, the NRC did not independently assess the information regarding the extent and nature of the boric acid accumulations found on the RPV head by the licensee during past inspections.

Because DBNPS did not intend to perform the Bulletin 2001-01 recommended inspections by December 31, 2001, the NRC initiated action to prepare an immediately effective order to require DBNPS to cease power operations by December 31, 2001. The licensee submitted additional information in order to justify continued operation until March 2002. The NRC staff questioned the information provided by the licensee in support of its justification for conducting VHP nozzle inspections after December 31, 2001. In particular, the NRC staff raised a number of questions regarding the extent and results of past inspections. Ultimately, the NRC accepted DBNPS's justification to operate only until February 16, 2002, provided that DBNPS committed to implement compensatory measures and non-visual, volumetric examinations of 100 percent of the VHP nozzles. DBNPS's commitment to perform volumetric examinations of 100 percent of the nozzles stemmed from NRC staff questions regarding extent and results of inspections conducted for the past four years (from the date of the bulletin). As discussed in Section 3.3.6, the task force's understanding of the information pertaining to RPV head and VHP nozzle

inspections differed from the information provided by DBNPS in its Bulletin 2001-01 submissions. If the NRC had independently reviewed this same information in the fall of 2001, as part of the process to review the licensee's justification for delaying VHP nozzle inspections, then the NRC may have identified at that time that DBNPS had been operating with VHP nozzle leaks.

(10) If the operational experience that formed the basis for GL 88-05 and GL 97-01 had resulted in a Generic Issue (refer to Section 3.1.3), then NRC follow-on verification of the implementation effectiveness would have been required by the current Generic Issues Program guidance. Two different NRC actions could have resulted, depending on what process was used, from a review of the same generic safety issue. The NRC's Office of Nuclear Reactor Regulation (NRR) draft Office Instruction LIC-503, "Generic Communication Affecting Nuclear Reactor Licensees," or the current guidance, NRC Inspection Manual Chapter 0720, "Nuclear Regulatory Commission Generic Communications," do not require an assessment of generic communication implementation by licensees for bulletins, generic letters, or information notices. Followup of generic communication by TI implementation is optional for bulletins and generic letters. For higher level issues that are classified by the NRC as "generic issues," which may result in the issuance of bulletins or generic letters, Management Directive (MD) 6.4, "Generic Issues Program," requires a closeout verification of licensee corrective action implementation and an assessment of the effectiveness of corrective actions.

(11) As discussed in Bulletin 2002-01, boric acid deposits on the RPV head were assumed to cause minimal corrosion while the reactor was operating because the temperature of the RPV head would be above 500°F, and dry boric acid crystals were not very corrosive. Therefore, wastage was typically expected to occur only during outages when the boric acid could be in solution, such as when the temperature of the RPV head falls below 212°F. However, the findings at DBNPS, and other industry events, such as those noted in IN 86-108, underscore the difficulty in making reliable assumptions about boric acid corrosion rates, particularly with respect to the RPV head.

(12) If the NRC had required licensee action and monitored actions being taken on the basis of the detailed information in IN 86-108, then the number and severity of subsequent boric acid leakage and corrosion events, particularly RPV head wastage events, may have been reduced. NUREG/CR-5576, "Survey of Boric Acid Corrosion of Carbon Steel Components in Nuclear Plants," issued in 1990, provides 17 events involving boric acid corrosion wastage, which include valve parts, fasteners, and nozzles, including two examples of RPV head wastage provided in Supplements 1 and 2 to IN 86-108. While GL 88-05 requested action regarding the need for a boric acid corrosion control program, IN 86-108, which contained detailed information on two RPV head wastage events, required no information or actions to be taken by licensees. Additionally, the relevant detailed information regarding the potential for RPV head wastage discussed in IN 86-108, were not reflected in GL 88-05. Little operational experience presented in the IN was included in DBNPS boric acid corrosion control program until the program was revised in May 2002.

(13) The information discussed in Bulletin 2002-01 highlighted one example of the significant uncertainties associated with the predictive capability of the model used for determining the susceptibility of VHP nozzles to PWSCC (refer to Section 3.1.4); however, the

conclusion noted in the bulletin indicated that the model was generally capable of predicting relative susceptibilities. Bulletin 2002-01 states that inspections performed to date at plants with high and moderate susceptibility have generally confirmed the ability of the model to predict a plant's relative susceptibilities; however, the bulletin noted that a plant with a ranking of 14.3 effective full-power years from the ONS, Unit 3 condition (at the time when circumferential cracking was identified at ONS, Unit 3 in March 2001) identified three nozzles with cracking.

(14) Typically, the NRC does not independently verify, through inspection, licensee implementation of owners group actions. For example, in response to GL 97-01, NRC accepted a generic B&WOG submission in lieu of B&W plant specific responses. Two of the expectations of the B&WOG relative to GL 97-01 which were not discussed in the B&WOG response to the NRC involved: (1) the performance of enhanced visual inspections of the RPV; and (2) the removal of boric acid deposits stemming from CRDM flange leakage to determine if there were any VHP nozzle leaks. These actions were not effectively performed by DBNPS, nor were there any specific NRC inspection activities of these two issues.

3.1.2.2 Recommendations

To address the issues discussed in this section of the report, the task force made the following recommendations:

(1) The NRC should revise its processes to require short-term and long-term follow-on verification of licensee actions to address significant generic communications (i.e., bulletins and GLs).

(2) The NRC should establish review guidance for accepting owners group and industry resolutions for generic communications and generic issues. Such guidance should include provisions for verifying implementation of activities by individual owners groups and licensees.

(3) The NRC should establish process guidance to ensure that generic requirements or guidance are not inappropriately affected when making unrelated changes to processes, guidance, etc. (e.g., deleting inspection procedures that were developed in response to a generic issue).

(4) The NRC should review industry approaches used by licensees to consider economic factors involved with VHP nozzle inspection and repair. This might include conducting representative cost/benefit analyses of non-visual inspections of VHP nozzles that would consider factors involving dose, cost, and time involved. The NRC should consider this information in the formulation of future positions regarding the performance of non-visual inspections of VHP nozzles.

(5) The NRC should conduct follow-on verification of licensee actions associated with a sample of other significant generic communications, with emphasis on those involving generic communication actions that are primarily programmatic in nature.

3.1.3 Generic Issues Program Implementation

The Generic Issues Program is the primary process for addressing a regulatory matter involving the design, construction, operation, or decommissioning of several or a class of NRC licensees that is not sufficiently addressed by existing rules, guidance or programs. NRC Management Directive 6.4, "Generic Issues Program," is the agency procedure governing this process and it is managed by the Office of Nuclear Regulatory Research (RES). Candidate generic issues (GIs) can be proposed by the public, industry, or the NRC. Once proposed, candidate GIs are evaluated for risk significance, and if certain thresholds are met, detailed analysis may be performed. Following an analysis, recommendations are made which may include both industry and NRC actions. For an issue to be classified as a GI (e.g., adequate protection, substantial safety enhancement, or burden reduction), certain core damage or large early release frequency thresholds must be met, which may also involve a cost benefit analysis made on the basis of dollars per person-REM.

The Generic Issues Program did not specifically address nozzle cracking, boric acid leakage, or boric acid corrosion. The NRC conducted studies in these areas, but they were not considered as candidate GIs. The non-stochastic nature of VHP nozzle cracking and boric acid corrosion further complicated the assessment. However, there was one generic safety issue that pertained, in part, to boric acid corrosion, which was closed out more than 10 years ago. The Generic Issues Program has undergone significant changes since its inception in the late 1970s. The number of candidate GIs has significantly declined over the last few years. Some of those familiar with the program believe that it takes too long to resolve a GI, and as a result, they believe the program is of limited usefulness.

3.1.3.1 Detailed Discussion

The task force identified a number of issues involving: (1) the closeout of a GI involving boric acid-induced corrosion of fasteners; (2) changes to the Generic Issues Program; (3) the reduction in the backlog of GIs; and (4) staff perceptions regarding the Generic Issues Program. The task force made the following specific observations:

(1) Alloy 600 nozzle cracking and boric acid induced corrosion events were not considered as candidate GIs. Other forms of alerting licensees were used instead, such as INs, bulletins, and GLs. However, Generic Safety Issue 29, "Bolting Degradation or Failure in Nuclear Power Plants," was initially proposed because of a boric acid corrosion event at Fort Calhoun Station in 1980. During a surveillance test, the licensee discovered that significant corrosion damage had occurred involving several of the pump casing to pump cover studs on three of four reactor coolant pumps. This issue was later expanded to include bolting failures of primary pressure boundary components and included other initiators such as stress corrosion, fatigue, and erosion/corrosion. NUREG-1339, "Resolution of Generic Safety Issue 29: Bolting Degradation or Failure in Nuclear Power Plants," issued in June 1990, provided the basis for resolution of Generic Safety Issue 29. This issue was classified as "resolved" in 1991.

(2) In recent years, resources to review, assess, and close out candidate GIs has significantly declined. Many programmatic and staffing changes have occurred over time relative to the processing of candidate GIs. The Commission originally requested that GIs be

reviewed and tracked in late 1976. Subsequently, a Generic Issues Program was formalized in 1978. Following the accident at TMI, Unit 2, many GIs were identified, and NRR was assigned the responsibility for the program. Following an NRC reorganization in 1987, RES was assigned the program responsibility.

(3) The number of candidate GIs has significantly decreased over the last few years. Interviews with NRC staff members revealed that approximately 80 percent of the issues have been developed from issues in NRR user need requests. The Generic Issues Program tracking began in 1983. New generic issues were identified in the range of 19 to 56 per year between 1983 and 1991, except for three years when the rate was less than 10 per year. This trend significantly changed between 1992 to 2001 when new GIs averaged 3.4 per year. A total of 834 candidate issues was identified by 1995. During the period 1996 to 2001, interviewees indicated that there was a strong focus on addressing the extensive backlog of GIs and not on identifying new GIs. As a result, the backlog was eliminated and only 10 new issues were addressed. Currently (2002), there are 10 GIs to be dispositioned.

(4) Some NRC staff believe that the implementation effectiveness of the Generic Issues Program is limited because the resolution of issues is typically protracted. The treatment of a candidate issue in accordance with MD 6.4 may take a year or more to analyze and longer to effectively close out by verification inspections, which are required under this program. Because of this view, in conjunction with the thresholds established for GI formulation, it appears that a number of emerging issues are being addressed directly through the issuance of INs, bulletins, or generic letters rather than submitting an issue as a candidate GI in accordance with MD 6.4.

3.1.3.2 Recommendations

To address the issues discussed in this section of the report, the task force made the following recommendations:

(1) The NRC should evaluate, and revise as necessary, the guidance for proposing candidate GIs.

(2) The NRC should conduct follow-on verification of licensee actions pertaining to a sample of resolved GIs.

3.1.4 Operating Experience Involving Foreign Nuclear Power Plants

Some relevant operating experience involving foreign PWR plants, particularly information involving circumferential cracking of VHP nozzles, was not widely known within the NRC. Foreign operating experience involving VHP nozzle cracking was assessed by NRC and the U.S. industry. However, in some cases, this experience was dispositioned as not being applicable to U.S. PWR plants.

3.1.4.1 Detailed Discussion

The task force identified a number of issues involving: (1) the NRC and U.S. industry review of foreign, primarily French, PWR plant VHP nozzle cracking operating experience; and (2) SCC susceptibility modeling. The task force made the following specific observations:

(1) An internal NRC trip report dated November 15, 1991, acknowledged circumferential cracking in the outside diameter (OD) of a VHP nozzle at a French nuclear station, Bugey, Unit 3. The task force did not find any further detailed evaluations of OD cracking of VHP nozzles, or its applicability to U.S. PWR plants. It appears that the NRC did not pursue the Bugey, Unit 3, VHP nozzle circumferential cracking experience (noted in GL 97-01), and considered the OD circumferential cracking at ONS, Unit 3 to be essentially a new issue when developing Bulletin 2001-01. The NRC's November 19, 1993, Safety Evaluation Report (SER), written in response to the PWR owners group submissions integrated by the Nuclear Management and Resource Council (NUMARC), noted that the NUMARC submission did not address the Bugey flaw, which was oriented at 30 degrees off the vertical axis, or a circumferential flaw at Ringhals. The NRC's SER subsequently indicated the need for an assessment of circumferential flaws. Regarding the Bugey operating experience, the task force reviewed information that indicated circumferential cracks originating from the VHP nozzle OD, parallel to the weld line. While some NRC staff members were generally aware of the Bugey operating experience involving VHP nozzle circumferential cracking, they were not aware of the specific details.

(2) In the early 1990s, foreign PWR plant VHP nozzle cracking experience was generally regarded as not being directly applicable to U.S. PWR plants on the basis of a limited comparison to U.S. PWR plant experience. NUREG/CR-6245, issued in 1994, documents the inspection of 4181 VHP nozzles at 67 foreign PWR plants that identified 101 penetrations with indications. This NUREG discussed the inspection of only one U.S. plant, Point Beach, Unit 1, in which no crack indications were identified. The lack of any indications was attributed to the differences in fabrication processes. The Point Beach nozzle material was likely to have had a lower yield strength, lower residual stresses, larger grain size, and a less susceptible micro structure than Bugey. The Point Beach station had 23 years of operation and no crack indication while Bugey had a through-wall crack after 10 years of operation. The NUREG conclusions discussed the possibility of circumferential crack propagation and rod ejection but they were not considered a possibility within the current licensing period. The axial cracks were considered not to grow through-wall because of the compressive axial stress present. However, a conservative time for the hypothetical through-wall crack was estimated to be six years. The conclusions recognized the use of a nitrogen-13 leak monitoring system as capable of detecting 0.001 gallons per minute (gpm) from the RCS, but the U.S. industry never implemented this modification.

(3) The French regulatory agency required both programmatic and plant changes for VHP nozzle cracking following the identification of VHP nozzle cracking at Bugey. A review of available information indicated that from the time of the Bugey leak (in 1991), the French regulators were concerned with both catastrophic failure of VHP nozzles from cracking and RPV head wastage from boric acid-induced corrosion. The NRC staff did not fully appreciate the importance the French placed on the RPV head wastage failure mode in formulating their response to this problem.

The French concluded that VHP nozzle cracking susceptibility modeling had significant limitations that made it impractical to perform any credible predictions. The U.S. industry and the NRC continued to rely on these models to determine the susceptibility to PWSCC. Some of the influencing factors noted by the French included: (1) the inability to determine the bulk residual stresses; (2) unknown stresses introduced through final finishing, such as straightening, reaming, machining, cold working, etc.; (3) the influence of dimensional changes and deformation in relation to the initial conditions; (4) the lack of correlation of time at a given temperature to the onset of cracking; (5) the difficulty in measuring the actual internal wall temperature; (6) the susceptibility difference within heats and batches because of variations in thermo-mechanical processes and carbon content; and (7) the intrinsic scatter of time to PWSCC initiation exhibited by identical specimens of Alloy 600.

The French regulatory authority required, in principle, an avoidance of through-wall axial cracking during an operating cycle. Therefore, the inspection program for French PWR plants was revised to require an eddy current inspection (non-visual), even in the absence of any indication of cracking. Reactor pressure vessel head visual inspections with the insulation removed were required in every outage from the early 1990s. When indications were observed, eddy current and ultrasonic test inspections were required more frequently. Consequently, the replacement of RPV heads became an economic decision by the French PWR operators, when considering the increased frequency of volumetric examinations that were required when VHP nozzle indications were discovered. The RPV head replacements for the French PWR plants were prioritized using the volumetric examination results that provided plant specific information on crack initiation. The VHP nozzle cracking at Cattenom, Unit 2 led to RPV head replacement after approximately four years of operation. While the cognizant NRC staff members were generally familiar with the French views regarding SCC susceptibility modeling, they were less familiar with the other bases for the French corrective actions for VHP nozzle cracking.

The NRC staff interviewed by the task force expressed a range of views regarding modeling of SCC susceptibility and SCC growth rates of VHP nozzles. Some staff believed that the modeling was a viable predictive tool, while others believed that there was a range of uncertainties, which called into question its usefulness as a predictive tool. Because of those uncertainties, some NRC staff members thought that additional plant specific testing was needed, or they thought the models should no longer be used.

3.1.4.2 Recommendations

To address the issues discussed in this section of the report, the task force made the following recommendation:

(1) The NRC should determine if it is appropriate to continue using the existing SCC models as a predictor of VHP nozzle PWSCC susceptibility given the apparent large uncertainties associated with the models. The NRC should determine whether additional analysis and testing are needed to reduce uncertainties in these models relative to their continued application in regulatory decision making.

3.1.5 Assessment and Verification of Industry Technical Information

The NRC and industry's conclusion that it was acceptable to detect VHP nozzle cracking by detecting VHP nozzle leaks was predicated on unverified assumptions. Also, the NRC did not fully consider relevant operating experience or research. These assumptions include: (1) GL 88-05 walkdowns would detect most VHP nozzle leaks; (2) that B&W licensees would perform enhanced visual inspections of the RPV head and correct CRDM flange leakage upon discovery; and (3) operating for a cycle with an undetected leak would not result in a safety significant issue. Also, the NRC's 1993 recommendation to industry to consider proposing a method for detecting leaks that are significantly less than 1 gpm did not result in the implementation of such a capability.

3.1.5.1 Detailed Discussion

The task force identified a number of issues involving: (1) assumptions regarding the ability to reliably detect VHP nozzle leaks before significant damage can occur; and (2) the review of industry guidance involving boric acid corrosion control. The task force made the following specific observations:

(1) The GL 88-05 program implemented by DBNPS was not effective in detecting VHP nozzle leaks; however, the industry and NRC did not verify the assumption that this program would be effective in detecting VHP nozzle leaks before significant degradation could occur. In 1993, the NRC stated its reliance on visual inspections as the best method for detecting leaking nozzles. Inspections at fixed intervals, on the basis of experimental evidence, were also cited as bases for safety assurance. The NRC also indicated that VHP nozzle penetration nondestructive examination (NDE) inspections should be performed, but cited worker exposure concerns as the basis for not requiring such inspections; however, it does not appear that detailed estimates of increased radiation exposure were provided by the industry for NRC review. The NRC's 1993 SER on VHP nozzle cracking concluded that a flaw would be detected during plant walkdowns, instituted as a result of implementation of GL 88-05 for boric acid leakage. The SER recommended enhanced leakage detection by visually examining the RPV head until either inspections showed no cracks existed, or that on-line leak detection be installed in the RPV head area. As previously discussed in Section 3.1.2, the NRC had not confirmed the implementation effectiveness of GL 88-05 programs, and had not implemented actions to ensure that alternatives would be adopted by the industry.

(2) The NRC and the B&WOG did not verify assumptions that CRDM flange leakage would be corrected upon detection. The NRC reviewed B&WOG submissions that provided its safety assessments of VHP nozzles. The basis of the B&WOG safety evaluation regarding identification of nozzle leak corrosion-induced wastage was dependent upon CRDM flange leakage being identified and corrected each outage, which would include any needed RPV head cleaning. However, DBNPS did not have a tracking mechanism to ensure that the assumptions of the B&WOG safety evaluation and the NRC's SER were incorporated into station licensing commitments or station procedures. DBNPS did not consider enhanced visual inspections to be required (refer to Section 3.2.2). The licensee's boric acid corrosion control program implementing procedures did not include requirements for the performance of enhanced visual inspections of the RPV head. While

DBNPS performed inspections of the RPV head, they did not perform inspections of the entire RPV head, as discussed in Section 3.2.2.

(3) The industry and NRC assumption that operating for a cycle with an undetected VHP nozzle leak would not result in a significant safety issue did not appear to appropriately consider that boric acid-induced corrosion rates in the range of 4 inches per year could occur. Since the operating cycle for DBNPS is two years and the RPV head is approximately 6-½ inches thick, ASME code margins could be compromised within one operating cycle under worst case conditions. Moreover, as noted in the EPRI Boric Acid Corrosion Guidebook, Revision 1, testing conducted in the early 1990s revealed that high rates of corrosion could occur below the surface of the RPV head. These test results also call into the question the timely identification of VHP nozzle leaks by means of visual inspections.

(4) No U.S. PWR plant licensee has developed and installed an enhanced leakage detection system as a means to compensate for uncertainties associated with assumptions regarding the ability of GL 88-05 walkdown inspections to identify VHP nozzle leaks before significant degradation could occur. In its 1993 SER, the NRC concluded that leakage at less than 1 gpm would be detectable over time on the basis of boric acid buildup noted during periodic surveillance walkdowns. Although NUMARC (NEI) proposed, and the NRC staff agreed, that low level leakage would not cause a significant safety issue to result, the NRC determined that industry should consider methods for detecting smaller leaks to provide defense-in-depth to account for any potential uncertainty in the industry's analysis. The NRC noted that small leaks resulting from flaws which progressed through-wall just prior to a refueling outage would be difficult to detect while the thermal insulation is installed. Although the NRC concluded that operating for an additional cycle with the undetected leak would not result in a significant safety issue, the NRC recommended that the industry should consider proposing a method for detecting leaks that are significantly less than 1 gpm, such as the installation of on-line monitoring equipment.

3.1.5.2 Recommendations

To address the issues discussed in this section of the report, the task force made the following recommendation:

(1) The NRC should determine whether PWR plants should install on-line enhanced leakage detection systems on critical plant components, which would be capable of detecting leakage rates of significantly less than 1 gpm.

3.1.6 NRC Operating Experience Review and Assessment Capability

The NRC scope of operating experience reviews has significantly changed over the past several years to gain efficiencies. These changes involve staffing levels, office location of the involved staff, and budget for accomplishing operating experience reviews. Also, the NRC procedures for accomplishing operating experience reviews generally do not reflect current practices.

3.1.6.1 Detailed Discussion

The task force identified a number of issues involving: (1) NRC's longer-term operating experience review capabilities; (2) operating experience review guidance; and (3) changes to operating experience review programs. The task force made the following specific observations:

(1) Generally, operating experience reviews currently performed by NRC do not involve the review and assessment of operating failure trends or lessons-learned of either domestic or foreign events. Longer-term operating experience reviews were accomplished by the Office for Analysis and Evaluation of Operational Data (AEOD) until 1999. AEOD was originally established as a lesson learned from the accident at TMI, Unit 2 in 1979. To gain efficiencies, AEOD was eliminated in 1999. The functions of AEOD were transferred to other NRC offices.

(2) Operating experience processes have not been updated. The program responsibility for MD 8.5, "Operational Safety Data Review," including the review of foreign operating experience also resided in the former AEOD. The program responsibility for MD 8.5 and foreign operating experience was reassigned in 1999, but neither program has been updated to reflect the actual process being used by the NRC. Management Directive 8.5 still references reviews to be conducted by AEOD.

(3) The scope of a number of specific NRC operating experience programs has been reduced or eliminated following recent program evaluations, but the impact of these changes on effectiveness have not been systematically assessed. There have been two recent reviews of the NRC's operating experience processes. The first was conducted in 1994, while the second was conducted in 1998. Both of these reviews were primarily focused on addressing efficiency issues. The task force noted the following:

- The NRC report entitled, "Report of the Review of Operational and Occupational Event Review, Evaluation, and Followup," issued on August 1, 1994, contained many recommendations. This report reviewed the level of support for NRC operational experience reviews and assessments and made recommendations to reduce duplication of effort by the region and headquarters offices, and to improve communications. The major recommendations of this report included reducing unnecessary overlap and duplication of event reviews, developing a human factors/performance program plan, and increasing the benefit from using risk assessments. The report also stated that overlap in the review and assessment of operational experience may be positive because of: (1) a reduction in the likelihood that a particular event or condition will not be handled properly; (2) oversight of the implementation of regional programs; and (3) an independent quality assurance function. No immediate major changes took place in the NRC because of this report.

- About four years later, the NRC issued a report entitled, "Self-Assessment of Operational Safety Data Review Processes," issued on December 17, 1998. This report contained many specific recommendations. The focus of this self-assessment primarily involved efficiencies of NRC headquarters processes for evaluating operational experience functions and processes. It also focused on

determining which functions could be reduced or eliminated. The major recommendations of this report included: (1) reducing the number of NRC information notices, bulletins and generic letters; (2) eliminating the AEOD annual report which summarized operating experience feedback, reliability and risk activities, generic event studies, operating experience data, incident responses, incident investigation program information, independent safety assessments, and international exchange of information; (3) eliminating routine event and inspection report screening by AEOD and NRR; (4) eliminating the events assessment panel (originally made up of NRR, AEOD, and RES) and using alternatives to ensure consistency in generic communications; (5) eliminating the Human Performance Event Database and the Work Assignment Management System Database which tracked LER assessment; (6) eliminating AEOD centralized screening of LERs, INPO documents, and NRC inspection reports; (7) transferring review and assessment of foreign reactor operating experience to NRR; and (8) maintaining event followup by NRR in determining the need for generic action.

- Staff Requirements Memorandum, SECY-98-228, "Proposed Streamlining and Consolidation of AEOD Functions and Responsibilities," indicated that the Commission had approved the staff's plan to streamline AEOD and consolidate its functions in other program offices. The SECY also indicated that, "It is important that these functions continue with a degree of independence and, in particular, remain independent of licensing functions. The Office of Research [RES] should provide focused analysis of the operational data and not expend scarce resources on those operational incidents that are not risk significant." While RES performs studies or evaluations of operational data, it generally does not initiate those studies unless specifically requested by NRR.

3.1.6.2 Recommendations

To address the issues discussed in this section of the report, the task force made the following recommendation:

(1) The NRC should take the following steps to address the effectiveness of its programs involving the review of operating experience: (1) evaluate the agency's capability to retain operating experience information and to perform longer-term operating experience reviews; (2) evaluate thresholds, criteria, and guidance for initiating generic communications; (3) evaluate opportunities for additional effectiveness and efficiency gains stemming from changes in organizational alignments (e.g., a centralized NRC operational experience "clearing house"); (4) evaluate the effectiveness of the Generic Issues Program; and (5) evaluate the effectiveness of the internal dissemination of operating experience to end users.

(2) The NRC should update its operating experience guidance documents.

(3) The NRC should enhance the effectiveness of its processes for the collection, review, assessment, storage, retrieval, and dissemination of foreign operating experience.

3.2 DBNPS Assurance of Plant Safety

In addition to the systems and components affected by RCS leakage, such as the containment air coolers (CACs) and the radiation monitor subsystems of the RCS leakage detection system, the licensee failed to effectively resolve long-standing or recurring component leaks involving CRDM flanges, RCS instrument thermowells, RCS valves, and other components. The task force identified a pattern of deferring: (1) repairs of leaking components found during outages; and (2) plant modifications intended to correct known problems. For some components (e.g., CRDM flanges), the licensee had also phased in repairs over the course of multiple refueling outages. Until the discovery of the RPV head degradation, most of the licensee's efforts were focused on addressing the symptoms of active RCS leakage rather than the causes. These efforts included implementing symptom-based corrective actions involving one of the very systems designed to detect RCPB leakage (i.e., the radiation monitor subsystems of the RCS leakage detection system).

The licensee failed to establish and effectively implement a boric acid corrosion control program. The implementing procedure lacked adequate guidance, and procedural requirements were not implemented. Removing boric acid from the RPV head was considered a decontamination activity rather than an important-to-safety activity. Outage schedule considerations influenced decisions regarding the extent of RPV head cleaning activities during past refueling outages.

The licensee failed to adequately implement industry guidance pertaining to the scope of RPV head inspections. The licensee did not develop and install an enhanced RCS leakage detection system. In a few cases, industry guidance was insufficient. The B&WOG did not perform any verification activities of its members' actions relative to its topical submissions regarding VHP nozzle cracking.

The licensee failed to adequately review, assess, and followup on internal and external operating experience. DBNPS failed to effectively address the lesson-learned from a 1998 precursor event involving the boric acid-induced corrosion of the pressurizer spray valve. A number of licensee managers and staff were unaware of external operating experience involving RPV head wastage events stemming from boric acid-induced corrosion of leaking components.

The specific weaknesses noted above, as well as other performance issues discussed in this report, collectively indicate DBNPS's failure to assure that plant safety issues would receive appropriate attention. Further, these performance issues indicate: (1) strained engineering resources; (2) an approach of addressing the symptoms of problems as a means of minimizing production impacts; (3) a long-standing acceptance of degraded equipment; (4) a lack of management involvement in important safety significant work activities and decisions, including a lack of a questioning attitude by managers; (5) a lack of engineering rigor in the approach to problem resolution; (6) a lack of awareness of internal and external operating experience, including the inability to implement effective actions to address the lessons-learned from past events; (7) ineffective and untimely corrective actions, including the inability to recognize or address repetitive or recurring problems; (8) ineffective self-assessments of safety performance; (9) weaknesses in the implementation of the employee concerns program; and

(10) a lack of compliance with procedures. Additionally, Section 3.3.6 details a number of problems involving the quality of DBNPS written information.

3.2.1 Reactor Coolant System Leakage Symptoms and Indications

The licensee failed to promptly identify or correct numerous RCS and other primary system leaks. Reactor coolant system leakage at DBNPS was historically low and rarely greater than 20 percent of the 1 gpm TS limit for unidentified non-RCPB leakage. One exception was the period from October 1998 to May 1999, when the licensee implemented a modification to the pressurizer relief safety valve discharge piping. This resulted in unquantified pressurizer safety relief valve seat leakage released to the containment atmosphere.

As symptoms of RCS leakage became more prevalent from 1998 to 2002, equipment required to be operable by the TS was affected. This equipment included the CACs and portions of the RCS leakage detection system (gaseous and particulate radiation monitors). Operability of these systems was required for continued plant operation. As these systems became degraded or inoperable, compensatory measures were taken to restore system performance and prevent a TS required plant shutdown. However, all the sources of the leakage which caused the system impacts were not corrected, including the VHP nozzle leaks.

As exemplified by the chronic nature of the problems associated with the CACs and radiation monitor subsystem trains of the RCS leakage detection system, symptoms of RCS leakage became so much a part of the normal routine of everyday plant operation that the underlying causes of the conditions were not corrected. Additionally, substantial effort was being made to address these leakage symptoms during power operation, but actions to rigorously and thoroughly address the sources of the leakage during outages, when there were opportunities to identify the leakage sources, were not evident or effective.

3.2.1.1 Detailed Discussion

In addition to the VHP nozzle leaks, other RCS leakage sources included: (1) the RPV head vent to Steam Generator No. 2; (2) RCS hot and cold leg instrument thermowells; (3) CRDM flanges; (4) the pressurizer spray valve; (5) a letdown cooler isolation valve; and (6) the pressurizer safety relief valves. The task force identified a number of issues involving actions to address the effects of the RCS leakage on the leakage detection system, including the associated radiation monitors and the CACs. The task force made the following specific observations:

(1) The plant experienced a significant boric acid-induced corrosion event in 1993 because it deferred repairs for about one year after the time of discovery. In February 1992, the licensee began to investigate elevated RCS leakage, and during a brief plant shutdown on March 1, 1992, it identified that the RPV head vent flange connection at Steam Generator No. 2 was leaking. The licensee and NRC senior resident inspector (SRI) noted that the CAC coils were also coated with boric acid. The task force interviewed the NRC resident inspector at the time, who recalled that the CAC coils were easily cleaned with demineralized water. The licensee evaluated the boric acid fouling condition of the CACs in Potential Condition Adverse Quality Report (PCAQ) 92-0072. The licensee concluded

that the CACs were still capable of performing their post-accident containment cooling function (CACs are also used for normal heat removal from the containment).

The licensee's evaluation that the CACs would remain operable, even if coated with boric acid deposits, lacked a sufficient basis. The licensee's assessment of post-accident containment response used assumptions valid for the time of year (winter) that the condition was discovered and nominal equipment performance. It should have used values in the Updated Final Safety Analysis Report (UFSAR) because the evaluation was used to justify future operability of the CACs. The UFSAR assumptions reflected the more severe operating conditions expected during summer. The evaluation provided a qualitative argument that the CACs would remain operable as long as the cooling coils did not become compacted with boric acid. The evaluation also stated that the CACs would be cleansed by the post-accident environment inside containment. Calculations to support this conclusion were not included in the evaluation. Additionally, there was no testing to support the basis for the assumptions. The evaluation provided a recommendation that the CACs be cleaned when CAC plenum pressure was less than 1.8 inches water gauge (iwg).

Because DBNPS personnel believed that the corrosion rates from the boric acid leak would be negligible, they continued to operate the plant with the leaking RPV head vent connection until the following refueling outage in March 1993 (RFO 08). The licensee initiated PCAQ 93-0098 to document an evaluation of the condition and implemented Modification 92-0004, "Repair of Reactor Head Vent Line," during the outage to improve the joint design. The modification was inspected during an NRC inspection, which was documented in NRC Inspection Report 50-346/92018. The NRC resident inspector recalled from the inspection that there was 1-1/8 inch wastage of the base metal, which had to be repaired. The boric acid corrosion control program was not assessed as part of the NRC inspection.

(2) The licensee did not implement vendor recommended modifications to RCS thermowells, some of which have leaked since the 1980s. DBNPS has experienced multiple instances of RCS hot and cold leg instrumentation leaks, which have not been resolved by modification. The RCS resistance temperature detector thermowell leakage boundaries consisted of two types: (1) a gasket between the thermowell and thermowell boss compressed by the thermowell fastener; and, (2) a threaded and seal welded thermowell joint. Both joint types have leaked during operation and required repair during outages. Both are the subject of a restart project modification to prevent future leakage.

(3) The licensee's implementation of a CRDM flange gasket design change to address a B&W generic problem with leaking CRDM flanges was untimely. Also, the licensee failed to repair all CRDM flange leaks identified during refueling outages. The B&W CRDM design contains a bolted, flanged connection to the VHP nozzles. The licensee replaced CRDM flange gaskets over a period that spanned five refueling outages. Some flange gasket leaks identified during refueling outages were not repaired prior to restart of the plant. A DBNPS staff member informed the task force that a limited amount of outage time was allotted for CRDM flange gasket replacement; therefore, only a limited number of flange gaskets were replaced each outage. Additionally, DBNPS staff believed that boric acid accumulation from CRDM flange gasket leaks was not a corrosion concern for the RPV head. Therefore, in their view, it was acceptable to replace a limited number of

flange gaskets or leave leaking flange gaskets in service for another operating cycle. The tolerance for the accumulation of boric acid on the RPV head from these leaks contributed to the failure to perform effective inspections to confirm that no RCPB leaks existed.

DBNPS failed to properly understand and place into the proper context the limited or zero CRDM flange leakage identified in RFO 10 (1996) and RFO 11 (1998). As a result, the licensee failed to recognize the resulting implications (i.e., VHP nozzle leakage) from the boric acid deposits that were found on the RPV head. There was no CRDM flange leakage identified in RFO 10 and, according to the licensee, only minor leakage identified in RFO 11. However, PCAQ 98-0767 attributed the boric acid deposits to CRDM flange leakage from previous operating cycles. The belief that the deposits were old was made on the basis of the rust or brown color of some of the deposits; however, this should have been recognized as an indication of carbon steel corrosion. Similarly, PCAQ 96-0551 stated that the boric acid deposits were from previous operating cycles. This PCAQ identified rust or brown stained boric acid deposits in a localized area, but did not evaluate this condition. Neither of the PCAQ problem resolutions addressed the increasing amount of boric acid deposits from RFO 9 (1994) through RFO 11, when the available information indicated that CRDM flange leakage had either stopped or was minor during the two operating cycles that spanned this four-year period. This information strongly suggested the possibility that a VHP nozzle leak could be a source of the boric acid deposits. This exemplifies the lack of questioning attitude by DBNPS personnel and a missed opportunity to identify VHP nozzle cracking.

Also, there were five CRDM flanges that were initially identified as having possible leaks during RF0 12. Four of those flanges had positive signs of leakage according to licensee records; however, for CRDM G9, licensee records stated, “Since the boron is evident only under the flange and not on the vertical surfaces, there is a high probability that G9 is a leaking CRD.” Control Rod Drive Mechanism G9 corresponds to VHP Nozzle 3. There was no documentation to indicate that the licensee had explicitly addressed the implication that the leakage associated with CRDM G9 may have represented RCPB leakage (e.g., VHP nozzle leakage).

(4) Another significant boric acid-induced corrosion event occurred in 1998. As described in NRC Inspection Report 50-346/98021, during RFO 11, the licensee discovered that a pressurizer spray valve packing leak caused severe boric acid corrosion of the valve yoke and fasteners. Upon plant startup, packing leakage resumed but was evaluated as acceptable. Repetitive containment entries were made to monitor the leak. Although the plant had been shutdown in June 1998 following a tornado event and twice in July 1998 for steam generator cleaning, the licensee did not repair the leak but installed a leak sealant injection device. During subsequent containment entries, the licensee discovered that some valve body-to-bonnet nuts were missing. In an unplanned October 1998 shutdown, the licensee determined that some of the body-to-bonnet nuts were installed with the incorrect material and boric acid corroded these nuts. One engineer described the amount of boric acid residue associated with the packing leak as extensive (a “sand dune” of boric acid deposits against the containment liner wall). The licensee reported this event to the NRC in LER 50-346/98009, and it resulted in the NRC issuing a Severity Level III violation on August 6, 1999 (refer to Section 3.2.4).

(5) Even after the pressurizer spray valve event, the licensee's actions in response to other instances of identified RCS leakage were narrowly focused. As described in NRC Inspection Report 50-346/98018, while trying to identify sources of RCS leakage in December 1998, the licensee identified that Letdown Cooler 1-1 Isolation Valve MU-1A had a packing leak. The licensee's plans to address the leakage were limited to the packing leak. An NRC inspector had to prompt the licensee to investigate whether body-to-bonnet stud conditions similar to that experienced with the pressurizer spray valve existed. When insulation was removed, a body-to-bonnet leak 270 degrees around the sealing surface was identified. The licensee then took actions to minimize the leakage. The fastener materials for this valve were found to be correct and there was no boric acid corrosion of the valve components. The licensee's initial plans were insufficient in scope to assess the extent of the condition (refer also to Section 3.3.3).

(6) The technical justification regarding the impact of a temporary modification (TM) to the pressurizer safety relief valve discharge piping lacked a sufficient basis. In 1997, engineering personnel identified in PCAQ 97-1518 that pressurizer safety relief valve nozzles could be overstressed if only a single rupture disk were to burst. Each safety relief valve had two rupture disks in its discharge pipe which would discharge to containment atmosphere if the safety relief valve lifted. A drain line between each safety relief valve and its set of rupture disks provided a path to route relief valve seat leakage from the pressurizer steam space to the quench tank. To address this concern on an interim basis, TM 98-0036 was installed during a forced outage in October 1998. The TM consisted of cutting open the rupture disks and severing the drain lines. This would prevent the hypothesized eccentric nozzle loading and overstress condition. The TM was subsequently removed during the May 1999 midcycle outage after further engineering analysis concluded that the eccentric loading concern was not substantiated.

Prior to installation of the TM, any safety relief valve seat leakage would be considered as "identified" RCS leakage because it was directed to the quench tank and accounted for in RCS inventory balance calculations. With the TMs installed, any seat leakage would discharge directly to the containment atmosphere and the resulting RCS inventory loss would be "unidentified" RCS leakage. The licensee did not assess the information in GL 88-05 which described an example of reactor coolant leakage flowing inside of the piping insulation, collecting there in contact with the carbon steel, and causing corrosion-induced wastage. Additionally, other potential areas of boric acid accumulation, such as nearby valve components, were not addressed.

During several task force interviews with plant staff, the pressurizer safety relief valve TM was cited as the most plausible source of RCS leakage that was considered the cause for CAC fouling and RCS leakage detection system radiation monitor filter element fouling in 1998-1999. The task force concluded that it was reasonable to assume that the safety relief valve seat leakage to containment was a contributor to increasing unidentified RCS leakage; however, as discussed in Section 3.3.1, the boron concentration for this contributor of RCS leakage (pressurizer steam space) would have been significantly less than the nominal RCS boron concentration, and would not have been as great as a contributor to CAC and radiation monitor filter element fouling as was assumed.

Following restoration of the discharge piping, the RCS unidentified leak rate was reduced to less than 0.3 gpm. However, this leak rate was still greater than three times higher

than the RCS unidentified leak rate at the beginning of Operating Cycle 12. Additionally, CAC cleaning was required on two occasions after the midcycle outage prior to RFO 12.

(7) The licensee was focused on addressing the symptoms of active RCS leakage rather than the causes. In 1999, the licensee submitted an amendment request to relax the TS requirements associated with the RCS leakage detection system radiation monitors to reduce the likelihood of TS required shutdowns as a result of radiation monitor filter element fouling. Section 5.2.4, "Reactor Coolant Pressure Boundary Leak Detection System," of the UFSAR discusses that the RCS leakage detection systems include the containment atmosphere particulate radioactivity monitoring system, the containment sump level/flow monitoring system, and the containment atmosphere gaseous radioactivity monitoring system. The systems are designed to meet the regulatory positions of NRC Regulatory Guide (RG) 1.45, "Reactor Coolant Pressure Boundary Leakage Detection Systems," May 1973. Technical Specification 3.4.6.1 identifies the limiting condition for operation of these systems. The bases for these systems are to provide means to detect and monitor leakage from the RCPB. The TS also prohibit operation with any RCPB leakage, and an immediate plant shutdown is required if any RCPB leakage is identified.

The NRC issued License Amendment No. 234 on November 16, 1999, and relaxed the TS requirement for the number of operable leakage detection systems and removed an immediate shutdown action TS requirement (unless all three RCS leakage detection systems were inoperable). Specifically, Amendment No. 234 resulted in the elimination of the previous 6-hour TS shutdown action statement entry requirement if one train of radiation monitors (gaseous and particulate) became inoperable (e.g., because of filter element replacement due to fouling) while the other train of gaseous and particulate radiation monitors was out-of-service for any reason. This condition had occurred on at least two occasions prior to issuance of Amendment No. 234.

Also, prior to issuance of Amendment No. 234, the licensee installed HEPA filters in containment to filter the containment atmosphere because iron oxide and boric acid were fouling the radiation monitor filter elements. Installation of the HEPA filters in containment occurred soon after restart from the 1999 midcycle outage, when the primary suspected source of RCS leakage (pressurizer safety relief valve seat leakage) was corrected. The licensee did not exhibit a questioning attitude or rigorous evaluation of the cause of this symptom, given that the principal source of previously suspected RCS leakage was corrected.

(8) From 1998 to 2002, the radiation monitor subsystem trains of the RCS leakage detection system became inoperable hundreds of times because of low air flow or saturated detector conditions. As a result, the radiation monitor subsystem trains of the RCS leakage detection system had lost their usefulness for meeting their design function. The licensee implemented a series of actions to address this symptom of RCS leakage. Specifically:

- The radiation monitor RCS leakage detection system sample points were changed from their "normal" sample collection points (on top of the containment D-rings) to their "alternate" sample collection points (containment dome and personnel hatch). This reduced the frequency of required filter element replacements, but appeared to

reduce the effectiveness of the monitoring systems in performing their design function of detecting RCPB leaks.

- The task force identified three corrective action documents pertaining to containment atmosphere radiation monitors which did not result in actions to address the source of leakage. Condition Report (CR) 1999-1300 identified the accumulation of iron oxide on radiation monitor filter elements. Its corrective actions included the temporary installation of the HEPA filters inside containment and the plan to perform an RCS walkdown during RFO 12 to look for leaks. Condition Report 2001-1110 requested a radiation monitor sample point change, and CR 2001-1822 was written to address the high frequency of radiation monitor filter element replacements and that boric acid was present. None of these CRs addressed the possibility that the RCS leakage detection system was actually detecting an RCPB leak. Although CR 2001-1822 discussed a plan to find the leak, it did not contain an action to track this to closure. The licensee provided no information to confirm that this action had been implemented.

- Each radioactivity detector subsystem train of the RCS leakage detection system includes a radioactive iodine monitor. This monitor was not required by the TS and was not discussed in the UFSAR or other licensing basis documents. However, this monitor was highly susceptible to filter fouling, and removing it from service for maintenance also required removing the TS required monitors in the same train. The licensee installed TMs 01-0018 and 01-0019 to eliminate the iodine monitor from the system on November 2, 2001. The safety evaluation for TM 01-0018 identified that the control room alarm used by operators to alert them as to when to check the radiation monitors did not have reflash capability. The same alarm was used by each of the three radiation monitor channels (iodine, noble gas, and particulate) in the train. When an alarm was received that identified that the iodine filter required changing, the safety evaluation stated that the iodine detector required 4 - 8 hours to come out of a saturated condition. Therefore, during the time that the iodine monitor was still in a saturated condition, control room operators would not receive an alarm for the particulate or noble gas channel if either or both channels detected a high radiation condition. With no reflash capability to provide indication to the control room operators of an alarm condition from the particulate or noble gas channels, the task force concluded that these monitors were inoperable. Two instances of detector saturation alarms occurred prior to issuance of Amendment No. 234. These events occurred on October 31 and November 2, 1999. Therefore, the licensee may have operated in violation of its TS on these dates, or the licensee may have failed to remain in the required TS action statement until alarm reflash capability was restored once the iodine detector became unsaturated.

(9) The licensee failed to assess reliable indications of increased unidentified RCS leakage rate. Factors contributing to this failure included: (1) the lack of requirements for responding to leakage detection system alarms; and (2) a lack of a Maintenance Rule (10 CFR 50.65) leakage performance criterion developed on the basis of a deviation from the long-term average unidentified RCS leakage rate. Regarding the sensitivity of leakage detectors, RG 1.45 states: “Sumps and tanks used to collect unidentified leakage and air cooler condensate should be instrumented to alarm for increases from 0.5 to 1 gpm in the normal flow rates. This sensitivity would provide an acceptable performance

for detecting increases in unidentified leakage by this method." Beyond this reference, neither the TS nor the RG discusses situations in which unidentified leakage increases noticeably from its normal steady state value while still remaining below 1 gpm (as was the case at DBNPS in 1998 and 1999). Additionally, these documents do not contain any requirements for responding to leakage detection system alarms. At DBNPS, leakage detection system alarms occurred, but the licensee's response to them did not lead to identification of the RCPB leakage that occurred.

There was a noticeable increase (approximately tenfold) in unidentified leakage during the last four months of 1998. Unidentified leakage continued to increase until it exceeded the RCS condition monitoring criterion of 0.75 gpm in April 1999. This criterion had been established by the licensee as part of its response to the Maintenance Rule. After a brief maintenance outage to correct the pressurizer safety relief valve seat leakage, unidentified leakage rate was about three to five times as high as the 1995-1998 long-term average steady state leakage rate. The licensee failed to vigorously pursue the other unidentified sources of active RCS leakage indicated by this elevated leakage rate.

(10) Boric acid fouling of the CACs resulted in a number of operational problems, which illustrated weaknesses in engineering, corrective action, and plant operations performance. Specifically:

- As discussed previously, CAC fouling with boric acid had been recognized as a symptom of RCS leakage in 1992 when the RPV head vent joint was found leaking. No additional cases of CAC fouling were identified until 1997. During review of station log entries, the task force identified that during the main transformer forced outage on May 22, 1997, personnel on tour in containment noted boric acid buildup on the inside of the incore instrumentation tank and on CAC No. 2. The task force was unable to determine what, if any, corrective actions the licensee took in response to this condition.

- The next instance of CAC fouling was documented in PCAQ 98-1980 on November 12, 1998. The licensee observed that indicated CAC plenum pressure had been decreasing (decreasing plenum pressure indicates that the CAC cooling coils are becoming fouled) from 3 iwg in early September to 2 iwg on November 12, 1998. Operations documented that the condition was reviewed with the system engineer and that the CACs remained operable. A reactor building entry was made on November 14, 1998, for further inspection. Licensee personnel observed that a thin, loose powdery buildup of boric acid was present on all cooling coil surfaces of the operating CACs. The boric acid was noted to be easily removable with water spray from a squeeze bottle. A team of personnel cleaned the CACs on November 18, 1998. From review of station log entries, the task force observed that personnel cleaned the CACs an additional 27 times from November 1998 through May 2001.

- The task force learned that CAC plenum pressure was monitored by the system engineer, who would initiate maintenance tasks to have the CACs cleaned as plenum pressure approached a revised administrative limit of 1.4 iwg. The task force reviewed CAC plenum pressure data and noted that on one occasion CAC plenum pressure decreased below the 1.4 iwg limit. The licensee stated that plenum

pressure limit was only a guideline for initiating cleaning and that the CACs were operable on the basis of the engineering evaluation developed for the 1992 occurrence of CAC fouling.

- On several occasions, primary containment temperature exceeded the 120°F limit of TS 3.6.1.5, which required that the condition be corrected in 8 hours, or place the unit in hot standby in the following 6 hours. However, these occasions occurred typically in the summer months when service water temperature was warmer and CAC testing activities were being performed. A review of the station logs revealed that licensee personnel made containment entries to clean the CACs in June 1999, as the containment temperature approached its TS limit.

- The method used to clean the CACs was not rigorously evaluated. The licensee used a pressure washer, in which demineralized water was heated by a kerosene fueled heater, to assist in flushing the accumulated boric acid through the CAC coils and into the air plenum. During subsequent CAC cleanings, the licensee switched to using an electric heater as the heat source for the water spray. Fire protection engineering personnel were consulted about the use of the kerosene-heated cleaning equipment prior to first use, and a hot work permit was required during the cleaning activity; however, no formal fire protection engineering evaluation for use of the equipment inside the containment had been performed. From review of station logs, the task force noted the following fire protection-related CAC cleaning entries: (1) on April 10, 2000, during CAC cleaning during RFO 12, operators recorded in the log, “Received fire alarm in containment . . . no indication of a fire exists and a kerosene steam cleaner is being used to clean the CACs”; and (2) on May 30, 2001, during on-line CAC cleaning, operators recorded in the log, “We will continue to perform the fire watch of containment by verifying stable CAC inlet temperature because access to containment will be limited.” The remote monitoring of containment temperatures to detect fire was an inadequate substitute for a locally-staged hot work fire watch with a fire extinguisher.

- The licensee had not evaluated other potential adverse effects of the power washing, such as: (1) water impingement on CAC components, including the air inlet plenum; (2) the creation of liquid radioactive waste; and (3) the effects of the dispersal of boric acid residue onto other structures, systems, and components within the containment, including the containment sump and liner.

- On-line CAC cleaning activities had become a routine occurrence, similar to a recurring preventive maintenance task. The system engineer informed the task force that as soon as the CACs were cleaned, he would initiate another material deficiency tag to start the planning process for the next required cleaning. CAC cleaning activities even became a factor in scheduling other maintenance tasks. For example, the station log for December 29, 1998, identified that instrumentation and controls technicians had made a containment entry for a level transmitter maintenance task. The associated log entry stated that the recalibration of the instrument they had worked on would be scheduled to occur during the next containment entry for CAC cleaning. Additionally, the task force noted that CAC cleaning was being tracked as one of the highest radiation dose jobs during Operating Cycle 13.

3.2.1.2 Recommendations

To address the issues discussed in this section of the report, the task force made the following recommendations:

(1) The NRC should improve the requirements pertaining to RCS unidentified leakage and RCPB leakage to ensure that they are sufficient to: (1) provide the ability to discriminate between RCS unidentified leakage and RCPB leakage; and (2) provide reasonable assurance that plants are not operated at power with RCPB leakage.

(2) The NRC should develop inspection guidance pertaining to RCS unidentified leakage that includes action levels to trigger increasing levels of NRC interaction with licensees in order to assess licensee actions in response to increasing levels of unidentified RCS leakage. The action level criteria should identify adverse trends in RCS unidentified leakage that could indicate RCPB degradation.

(3) The NRC should inspect plant alarm response procedure requirements for leakage monitoring systems to assess whether they provide adequate guidance for the identification of RCPB leakage.

3.2.2 Boric Acid Corrosion Control Program and Implementation

The licensee failed to adequately implement its boric acid corrosion control program. The boric acid corrosion control program procedure lacked sufficient guidance. The procedure was not followed in a number of instances, particularly with respect to the discovery of boric acid on the RPV head. Until recently, there were no explicit procedural requirements for inspecting the RPV head. When the RPV head was inspected in 1996, 1998, and 2000, not all the boric acid deposits were removed, and the procedurally required evaluations for corrosion were not always performed. The licensee considered the removal of boric acid deposits from the RPV head to be a decontamination activity. As a result, this activity was not typically governed by work instructions. An analysis of videotapes revealed that some of those involved in the RFO 12 RPV head inspections and cleaning activities were astonished by the amount and nature of the boric acid deposits on the RPV head. Not all of these deposits were removed, particularly deposits near the center of RPV head. The licensee's corrective actions in response to the NRC's 1999 escalated enforcement action for the boric acid-induced corrosion of the pressurizer spray valve fasteners did not result in the licensee's identification of the boric acid corrosion wastage of the RPV head when DBNPS personnel had the opportunity to do so during RFO 12. The licensee failed to implement one of its GL 88-05 commitments to repair all CRDM flange leaks once identified. Additionally, without a strong safety basis, the licensee revised another GL 88-05 commitment pertaining to boric acid corrosion walkdowns at normal operating temperatures and pressures.

3.2.2.1 Detailed Discussion

The task force identified a number of issues involving: (1) the results and thoroughness of VHP nozzle and RPV head inspections as revealed by videotape records; (2) boric acid corrosion control procedural guidance; (3) boric acid corrosion control procedure implementation; and

(4) implementation of GL 88-05 commitments. The task force made the following specific observations:

(1) A review of RPV head inspection and cleaning videotapes associated with RFO 10, 11, and 12 revealed multiple issues involving the adequacy of the inspections, as well as the nature and extent of boric acid deposits on the RPV head. In general, the following observations pertained to all the reviewed videotapes:

- There appeared to be a lack of distinguishable reference points to orient personnel performing inspections, such that specific locations could not be determined. Contributing to this lack of adequate referencing was a lack of numbering or other forms of weep hole identification. The weep holes were used for inserting the video camera into the RPV head area. On the basis of the audio discussions, there were a number of instances in which the personnel performing the inspection were uncertain about the orientation of the camera and the actual nozzle being viewed.

- Only the periphery of the RPV head could be viewed in detail. The center part of the RPV head could not be viewed close-up. With respect to the ability to observe the RPV head center, little could be observed because of obstructions. As a reference, in PCAQ 96-0551, an engineer stated that the extent of inspection was limited to approximately 50-60 percent of the RPV head area because of restrictions imposed by the location and size of weep holes.

Observations from the videotapes of the RPV head that are related to a particular RFO include the following:

- The RFO 10 (1996) as-found videotape revealed a light dusting of boric acid deposits on the RPV head area, with larger quantities of boric acid deposits at some nozzle locations. At VHP Nozzle 67, there were some rust/red colored boric acid deposits and what appeared to be light surface corrosion. Following cleaning, there were still some boric acid deposits remaining at nozzles closer to the center of the RPV head, but surface corrosion was not noted or quantified at VHP Nozzle 67 or at any other location where such deposits were found.

- The RFO 11 (1998) as-found videotape provided the least amount of actual RPV head coverage. The video camera appeared to be angled upwards toward the insulation rather than on the RPV head surface. There was no video record of views of the center of the RPV head. There were areas which showed boric acid deposit build-up near some nozzles; however, the audio discussion indicated that the inspection was completed without any reference to the boric acid deposit accumulation. A high percentage of the boric acid deposits had a red/brown color as compared to RFO 10. In the cleaning videotape, more of the center portion of the RPV head could be seen, with larger quantities of boric acid deposits remaining. Vacuuming was effective in removing boric acid deposits near the periphery, but there was some tightly adhered boric acid deposits which the vacuum could not remove even in these locations.

- Analysis of the RFO 12 (2000) audio commentary for the as-found inspection videotape revealed that some of the individuals performing the inspection were

astonished by the large quantities of boric acid deposits discovered on the RPV head (e.g., “mountains,” “piles,” and “cloud” of boron). At locations closer to the center of the RPV head, the boric acid accumulations occluded the gap between the top of the RPV head and the thermal insulation. The amount of red/brown boric acid deposits were considerably greater in RFO 12 than the amount observed in RFO 11. These boric acid deposits prevented the inspection of some nozzles because the deposits blocked the path of the video camera. During the inspection, there were instances in which the video camera became lodged in deposits. In one instance, when the video camera was dislodged from a boric acid deposit, residue fell out of a weep hole.

- The RFO 12 cleaning and inspection as-left videotape showed RPV head power washing. The task force noted that boric acid deposits towards the center of the RPV head remained and were not affected by the cleaning. Some boric acid deposits still filled the gap between the RPV head surface and the insulation at some locations near the RPV head center.

(2) The DBNPS boric acid corrosion control program procedure was not comprehensive. Procedure NG-EN-00324, “Boric Acid Corrosion Control,” Revision 0 became effective on September 8, 1989. This revision of the procedure was applicable whenever a coolant leak was detected anywhere within the RCPB. However, no RCPB leak locations were identified as principal leak locations until Revision 3 of NG-EN-00324 was issued on May 29, 2002. Revision 3 included Alloy 600 welds and components as principal leak locations.

(3) The licensee deferred repairs (contrary to its GL 88-05 program commitments) of identified CRDM flange leaks on the basis of an assessment of the severity of the leak. The licensee developed a process for ranking the severity of CRDM flange leakage to provide consistency in determining which flange leaks would be repaired or deferred to the next refueling outage. The CRDM flange leakage was dispositioned for deferral on the basis of the leakage ranking assigned by the system engineer. This illustrates that DBNPS did not regard a GL 88-05 commitment to inspect for and repair flange leaks during each outage as one that had to be performed.

(4) The licensee allowed accumulations of boric acid to remain on the RPV head even though Procedure NG-EN-00324 directed their removal. For example, boric acid accumulation was documented in PCAQ 1996-0551 during RFO 10. This PCAQ identified rust or brown boric acid deposits at VHP Nozzle 67 and rust or brown boric acid deposit accumulation in the general vicinity. The PCAQ stated that all boric acid was not removed from the RPV head and that it was difficult to distinguish whether the deposits were from the CRDM flanges or the leak was from a CRDM nozzle (i.e., a VHP nozzle). The evaluation of boric acid corrosion was focused on the boric acid that was identified at VHP Nozzle 67 (near the RPV head periphery). However, the PCAQ discussed that only 50 - 60 percent of the RPV head area could be inspected and the extent of any corrosion in the remaining area could not be assessed. The area that could not be inspected for corrosion was the center part of the RPV head, which had boric acid accumulation remaining.

(5) Potential Condition Adverse to Quality Report 1996-0551 indicated that boric acid accumulation was not a significant problem primarily on the basis of the assumption that

boric-acid induced corrosion would be minimal because the RPV head was at an elevated temperature. Also, the implications from the rust or brown boric acid deposits, which were obvious signs of carbon steel corrosion, were not addressed. This PCAQ remained open for nearly 3 years and was closed partially on the assumption by DBNPS that dried boric acid on the RPV head would not pose a corrosion concern. The requirements of Procedure NG-EN-00324 were not met to inspect and evaluate the identified leakage. An opportunity to identify the VHP nozzle leaks and RPV head corrosion years earlier was missed by this inadequate evaluation.

(6) Boric acid corrosion control inspection checklists were not completed or were not retained. In 1996, the licensee changed procedure NG-EN-00324 to include a "boric acid corrosion control inspection checklist." The checklist was a form intended for use by the engineering staff to document performance of inspections and evaluations. The procedure required documentation of inspection results by engineering personnel; however, the completed checklists were not controlled as a quality record. Initiation of a CR was left to the discretion of engineering personnel if they determined the leakage or damage warranted one. The task force was provided with some completed checklists, while others that were requested could not be located by the licensee.

An engineer initiated a boric acid corrosion control inspection checklist form on April 6, 2000, during RFO 12. The checklist identified that heavy leakage from the service structure weep holes onto the RPV flange was found and that corrosion was present as evidenced by red/brown deposits. A detailed inspection was recommended because, "new leakage from head was identified which was not evident during RFO 11." Although CR 2000-0782 and CR 2000-1037 were initiated to document these findings, the boric acid corrosion control checklist was not completed. The checklist did not document any results of the recommended detailed inspection or of any evaluation. Interview results revealed that some cognizant engineers believed the checklists offered little or no value and that they were typically not completed. One engineer stated that documentation of inspection results and evaluations would be completed as part of the CR process. The task force determined that the subject CR evaluations did not address potential corrosion effects.

(7) The removal of boric acid deposits from the RPV head was not typically governed by detailed procedures or work instructions because cleaning the RPV head was considered to be a routine decontamination activity. Prior to RFO 12, attempts to remove boric acid deposits from the RPV head were performed under the umbrella of a "decontamination activity," led by radiological controls personnel. During RFO 10, RFO 11 and initially in RFO 12, the boric acid was removed with a putty knife and vacuum cleaner attached to poles to reach into the RPV head from the weep holes. During RFO 12, after significant amounts of boric acid deposits remained following mechanical cleaning, the RCS system engineer initiated Work Order (WO) 00-001846-000 to clean the RPV head and the top of the insulation. The WO stated that large boric acid accumulation was noted on the top of the RPV head and on the insulation, and it stated that boric acid corrosion may occur. The WO identified that a power wash with heated water would be used to remove the boric acid deposits, and it stated the process would be repeated until "most boric acid deposits are removed or until directed by HP." The documentation of WO completion stated that the work was "performed without deviations."

The evaluation for CR 2000-1037 indicated that no boric acid-induced damage to the RPV head surface was noted during the subsequent inspection (this was following the cleaning process under WO 00-001846-000). From review of CR 2000-0782 and CR 2000-1037, interviews with station personnel, and observations of videotaped inspections, the task force determined that some boric acid deposits were not removed during the power wash cleaning. The task force could find no information to indicate that post-cleaning inspection was performed, particularly in the RPV head center area, to determine whether corrosion was present on the RPV head.

Since at least 1996, the plant was restarted following each refueling outage without having performed evaluations for boric acid accumulations that were found on the RPV head. Some DBNPS personnel indicated that time pressure to complete refueling outages on schedule, combined with the assumption that boric acid accumulation on the RPV head was not a corrosion concern, contributed to the accepted practice of allowing boric acid to remain on the RPV head.

(8) Without a good safety basis, the licensee relaxed its procedural requirements to perform a Mode 3 walkdown of the RCS at the beginning of a refueling outage (a GL 88-05 commitment). Revision 2, Change 1 of Procedure NG-EN-0324 (February 2002) changed the requirement to perform a Mode 3 (normal operating temperature and pressure) walkdown of the RCS at the beginning of a refueling outage to identify leaks. This change made the Mode 3 walkdown an option, at management discretion. This decision was made on the basis of the industrial safety concerns of performing these walkdowns and that signs of leakage (boric acid accumulation) would be identified after plant cooldown. During the onset of the 2002 RFO, the Mode 3 walkdown was not performed.

The UFSAR did not discuss the boric acid corrosion control program, nor did it include any discussion of responses to NRC generic communications, such as GL 88-05. 10 CFR 50.71(e) provides requirements for updating the UFSAR. While the DBNPS's evaluations relative to GL 88-05 were not required to be included in UFSAR updates on the basis of current industry guidance endorsed by NRC, having the program described in the UFSAR would have made the program commitments more visible to the DBNPS staff.

(9) The licensee's training, which was one of the corrective actions for the pressurizer spray valve event, was ineffective. Following the pressurizer spray valve boric acid-induced corrosion event, the NRC documented in its August 6, 1999, escalated enforcement action that the licensee's corrective actions included: (1) training sessions with maintenance personnel to enhance knowledge of the effects of boric acid on materials; (2) a review of boric acid corrosion procedures which resulted in program enhancements; (3) the inspection of pressure retaining bolted connections with a potential for the installation of fasteners of nonconforming material; and (4) resolution of the pressurizer spray valve packing problems. The training was performed in one hour, and did not include all personnel involved with performing boric acid corrosion control program inspections or evaluations. This training was, however, provided to some of those involved in the RFO 12 RPV head inspection and cleaning activities.

3.2.2.2 Recommendations

To address the issues discussed in this section of the report, the task force made the following recommendation:

(1) The NRC should inspect the adequacy of PWR plant boric acid corrosion control programs, including their implementation effectiveness, to determine their acceptability for the identification of boric acid leakage, and their acceptability to ensure that adequate evaluations are performed for identified boric acid leaks.

3.2.3 Owners Group and Industry Guidance

The licensee did not adequately implement B&WOG and other industry guidance relative to identifying VHP nozzle leakage, as well as boric acid leaks and corrosion. Some cognizant DBNPS personnel were unaware of key details. There were no verification activities by the B&WOG for its members relative to GLs 88-05 and 97-01.

3.2.3.1 Detailed Discussion

The task force identified issues involving: (1) knowledge, implementation, and verification of B&WOG and EPRI guidance; (2) adequacy of industry guidance; and (3) implementation of a vendor proposed modification. The task force made the following specific observations:

(1) A number of licensee personnel were unaware of the potential indications and effects of VHP nozzle leakage. In 1993, the NRC requested that each PWR owners group provide a safety evaluation to document why no unreviewed safety question existed for Alloy 600 VHP nozzle cracking. The Materials Committee of the B&WOG documented its safety evaluation in Report BAW-10190P, “Safety Evaluation for B&W-Design Reactor Vessel Head CRDM Mechanism Cracking,” dated May 26, 1993. Report BAW-10190P stated that RPV inner head nozzle cracks were expected to be axial in orientation and would require a minimum of 6 years to propagate through-wall. Since the cracks were expected to be axial in orientation and not circumferential, a control rod ejection accident was not possible. If a crack propagated through-wall, above the nozzle-to-head weld, leakage was expected and a large amount of boric acid deposition on the RPV head was expected. Additionally, the report stated that once boric acid deposition occurred on the RPV head, wastage could initiate. B&WOG predicted that wastage of the RPV head could progress for 6 years before ASME Code limits were exceeded.

In general, licensee engineering personnel and managers were unaware of this assessment regarding RPV wastage rates. During interviews with DBNPS engineers and managers, the task force determined that DBNPS personnel had minimal knowledge and understanding of the content of Report BAW-10190P and the NRC SER. For example, one engineer stated that he had never read these reports. Another engineer, who had been responsible for performing RCS boric acid corrosion evaluations in the past, stated that until the VHP nozzle leak and RPV head corrosion event, he did not recall that the report discussed wastage of the RPV head. His understanding was that dry boric acid crystal accumulation on the RPV head would not cause wastage. Additionally, he stated that plant engineering staff did not know that boric acid with red discoloration was

indicative of boric acid corrosion of carbon steel. The task force noted that this was inconsistent with the information in PCAQ 1996-0551, which he initiated. Also, this was inconsistent with CR 2000-0782. This CR identified that red, lava-like boric acid was observed on the RPV flange coming from the RPV service structure weep holes, and had attached the boric acid corrosion control inspection checklist to the CR which documented that corrosion was present due to the red/brown deposits.

(2) From interviews with DBNPS staff, the task force determined that an inadequate feedback mechanism existed for ensuring that owners group reports, such as BAW-10190P, were reviewed upon receipt to incorporate actions into the DBNPS commitment tracking system. The DBNPS B&WOG Materials Committee member stated that reports such as this would be distributed to member utilities for information, but there was no means to ensure that required actions were incorporated into their commitment tracking system. Therefore, there was no assurance that expected actions would be reflected in station programs, processes and procedures, as applicable.

Commitment A16892 was a tracking item to ensure that the B&WOG responded to the NRC staff with its safety evaluation. It did not ensure that the bases of the B&WOG safety evaluation, accepted by the NRC staff, would be implemented at DBNPS. It was closed with a statement that proper visual inspections would be performed during the 1994 refueling outage (RFO 09). A licensee engineer initiated PCAQ 94-0295 on March 17, 1994, to document that Commitment A16892 may have been inappropriately closed. The PCAQ was closed on May 9, 1994, because the licensee concluded that GL 88-05 inspections of the RCS were sufficient and acceptable to the NRC for inspection of the VHP nozzles. Closure documentation stated that performing an enhanced visual inspection was an NRC recommended action, but was not a requirement.

(3) The B&WOG did not perform any reviews of member utility implementation of actions in response to GL 88-05 and GL 97-01. The former Chairman of B&WOG indicated that since the member utilities had representatives on the B&WOG committees, those representatives would be expected to ensure that actions applicable to their plant would be implemented. This did not occur at DBNPS.

(4) The licensee did not incorporate applicable guidance into its boric acid corrosion control program. In April 1995, EPRI published the Boric Acid Corrosion Guidebook to provide guidance to the industry to implement an effective boric acid corrosion control program. This guidebook contains detailed information, such as, methods to detect small leaks. Under methods to detect leak rates less than about 0.1 gpm (Section 6.2.2 of the Guidebook), two specific guidelines were given: (1) containment air cooler thermal performance as observed in coil heat transfer degradation; and (2) consideration for monitoring the boric acid concentration in the containment air cooler condensate. Under other potential indicators, there was reference made to observing high containment particulate readings. Each of these component areas discussed in the EPRI Guidebook was a source of chronic concern at DBNPS, along with other boric acid leakage indications.

(5) A B&W proposed service structure access opening modification was deferred for over a decade. It was originally initiated by the licensee in Request for Modification (RFM) 90-0012, on March 21, 1990. The modification included the installation of several large

access openings in the service structure which would eliminate the cumbersome and difficult method of accessing the VHP nozzles via the weep holes located at the base of the service structure. This RFM was voided on September 10, 1992. The basis for voiding stated: "This modification was initiated to allow easier access for inspection of CRDM flanges and for cleaning of the reactor vessel head. Current inspection techniques using high powered cameras preclude the need for inspection ports. Additionally, cleaning of the reactor vessel head during last three outages was completed successfully without requiring access ports."

The service structure access opening modification was initiated again on May 27, 1994, as RFM 94-0025. RFM 94-0025 was not canceled, but it was deferred on at least 11 occasions by the licensee's Project Review Group (PRG) or Work Scope Committee for future outages. The basis for the modification deferral was that it was not required from a safety perspective and RFM 94-0025 was not implemented at all other B&W units. The RPV head inspection videotapes unambiguously illustrated the difficulty in inspecting and cleaning the RPV head.

(6) The task force identified problems involving applicable industry guidance. For example, no guidance was provided to licensees on how to remove boric acid deposits from the RPV head. DBNPS used several methods, including a water wash. Prior to RFO 12, the licensee considered the possible effects of water washing the RPV head, but lacked technical guidance from industry to aid its decision. Some DBNPS engineering personnel were concerned that water entering the annulus between the VHP nozzle and the RPV head could initiate a general corrosion mechanism. The licensee provided no documentation regarding the technical basis for how this concern was resolved.

Also, despite B&WOG guidance that bulging RPV head insulation is a reliable indicator of VHP nozzle leakage, no insulation bulging or defects were observed at DBNPS. The task force noted this guidance appears to be applicable to other RPV head insulation designs.

3.2.3.2 Recommendations

To address the issues discussed in this section of the report, the task force made the following recommendations:

(1) The NRC should review a sample of NRC safety evaluations of owners' group submissions to identify whether intended actions that supported the bases of the NRC's conclusions were effectively implemented.

(2) The NRC should develop general inspection guidance for the periodic verification of the implementation of owners groups' commitments made on behalf of their members.

3.2.4 Internal and External Operating Experience Awareness

The lessons from a significant boric acid-induced corrosion precursor event at DBNPS should have resulted in the identification of VHP nozzle leaks at an earlier time. A number of licensee personnel were unaware of internal and external operating experience involving significant carbon steel wastage caused by higher than anticipated boric-acid-induced corrosion rates.

The licensee did not include LERs within the scope of its operating experience review program, which may account for a general lack of awareness of pertinent industry trends (refer to Section 3.1.1 and Appendix E). In general, the processing of external operating experience was not thorough or timely.

3.2.4.1 Detailed Discussion

The task force identified a number of issues involving: (1) lessons-learned from a DBNPS precursor event; (2) the scope of the operating experience review program; (3) DBNPS staff awareness of internal and external operating experience involving VHP nozzle cracking and RPV head wastage events; (4) trending of DBNPS boric acid corrosion problems; and (5) the adequacy and timeliness of processing external operating experience. The task force made the following specific observations:

(1) The licensee failed to effectively address the lessons-learned from a boric acid-induced corrosion precursor event. As discussed previously, in 1998, the pressurizer spray valve (Valve RC-2) fasteners were corroded by boric acid. Three body-to-bonnet nuts were severely degraded: (1) one nut was 30 percent dissolved; (2) a second nut was 93 percent dissolved; and (3) a third nut was 100 percent dissolved. Greater sensitivity to the effects of boric acid corrosion on plant equipment and integration of these insights into plant processes and operational philosophy were to be institutionalized by developing a revision to the boric acid corrosion control program and the Work Process Guideline on plant leakage, including the benchmarking of industry standards for monitoring, evaluating, documenting and controlling boric acid leakage. Also, training was provided to managers and technical staff members to address the technical issues of boric acid corrosion control, the boric acid corrosion control program and requirements, lessons-learned from the event, and industry experience. Additional management issues involving oversight, and reinforcing the philosophy of conservative decision making were to be addressed by the site corrective action program.

The following lessons-learned from this event were subsequently presented in an EPRI Boric Acid Corrosion Workshop in May 2001 by a DBNPS engineer:

- “Less than adequate material segregation”
- “Less than adequate knowledge of past history,” including “startup inertia”
- “Acceptance of substandard equipment performance”
- “Did not recognize red/brown boric acid deposits = [equals] major wastage”
- “Felt that discoloration was due to minor yoke corrosion”
- “Did not recognize potential for high corrosion rate” and
- “Boric Acid was not removed for all inspections”

The final presentation slide stated: “May your boric acid always be white!” The task force interpreted this to indicate a clear recognition by DBNPS personnel involved in the presentation that red/brown boric acid deposits were indicative of corrosion of carbon steel. All but one of these lessons-learned are applicable to the licensee’s 2002 VHP nozzle leakage and RPV head degradation event. Even though this presentation was given the year after RFO 12, the lessons were identified in 1998-1999. In the view of the task force, these lessons should have resulted in the licensee’s identification of the RPV head degradation no later than the spring 2000 refueling outage.

(2) The licensee did not include LERs or trending of LER information within the scope of its operating experience program even though this information was available to them. Consequently, the licensee had not developed insights from an assessment of boric acid leakage and corrosion events documented in LERs, such as those discussed in Section 3.1.1 and Appendix E.

(3) Interviews of DBNPS personnel revealed that they were unaware of the information in NUREG/CR-6245, which indicated that the peripheral nozzles of B&W PWR plants were not more susceptible to VHP nozzle cracking (refer also to Appendix E, Table E.2-1) as was commonly believed. This is significant because some licensee managers and staff members believed it was acceptable, at least in part, not to remove boric acid deposits from the RPV head because they believed that VHP nozzles in the RPV head center area were not likely to crack.

(4) Interviews of licensee personnel revealed that they were generally unaware of operating experience involving other PWR plants in which the level of corrosion was much more extensive than anticipated because there was a presence of highly corrosive boric acid solution rather than the expected, dry boric acid crystals. For example, they were generally unaware of the lessons from the Turkey Point, Unit 4 event in March 1987, and the Salem, Unit 2 event in August 1987. Some DBNPS personnel believed that boric acid corrosion on the RPV head would not result in significant wastage because of the elevated temperature of the RPV head, which would result in dry boric acid deposits. Given this, there was a presumption that boric acid deposits would not be a concern because the corrosion rates would be extremely low. This indicates that one of the past lessons, namely, the inability to predict environmental conditions, etc., particularly inside the containment building, was forgotten or never fully appreciated.

(5) Reviewing DBNPS's own operating experience with boric acid leakage and corrosion reveals a long history of leakage events, many of which were not thoroughly reviewed, assessed, and effectively corrected. Several of these issues, which are documented in corrective action documents, also indicate damage to components inside containment. Appendix E, Table E.5-1, "Sample of Boric Acid Leakage, Corrosion, and Control Issues Documented by DBNPS," provides a representative listing of boric acid issues documented at DBNPS since 1989. Issues dating back to 1989 were chosen because most licensees had developed a boric acid corrosion control program by that time in response to GL 88-05. DBNPS retained few boric acid corrosion control program leakage records, and tracking and trending of important issues were not performed.

(6) The task force identified a number of instances in which the processing of external operating experience was not thorough or timely. For example, the reported instance of VHP nozzle circumferential cracking at ONS, Unit 3 in November 2001 was dispositioned by DBNPS after the licensee discovered the degradation of the RPV head. Licensee personnel dispositioned this issue by referencing Bulletin 2002-01, which was issued by the NRC in response to the DBNPS event.

3.2.4.2 Recommendations

To address the issues discussed in this section of the report, the task force made the following recommendation:

(1) The NRC should assess the scope and adequacy of its requirements governing licensee review of operating experience.

3.2.5 Oversight of Safety Related Activities

The circumstances surrounding the VHP nozzle leakage and RPV head corrosion event indicated that it was caused, in part, because the licensee failed to assure that plant safety issues would receive the appropriate attention. This lack of assurance directly contributed to the untimely identification of VHP nozzle leakage and the boric acid-induced wastage of the RPV head.

Plant (system) engineering resources were strained by multiple system and collateral duty assignments and high turnover. This directly contributed to a lack of continuity in successive RPV head inspections, and also appears to have been a factor in not fully implementing the boric acid corrosion control program.

The chronic nature of RCS leakage symptoms demonstrated DBNPS's willingness to accept degraded plant conditions, provided any related conditions that challenged plant operations could be resolved. There were considerable efforts to address RCS leakage symptoms while operating at power, but a lack of focused effort to develop or implement rigorous plans to find the source of leaks during outages. There was a lack of an appropriate level of management involvement in important safety significant work activities and decisions. Managers did not exhibit a sufficiently questioning attitude.

In general, corrective actions to resolve problems were untimely and were ineffective in preventing recurrence of similar problems. The licensee did not apply the appropriate degree of engineering rigor in its approach to problem resolution. When related assessments of safety performance were performed, they were ineffective. Also, there were a number of problems indicating weaknesses with the employee concerns program.

3.2.5.1 Detailed Discussion

The task force identified a number of issues involving: (1) engineering resources; (2) production focus; (3) material condition of plant hardware; (4) involvement in the oversight of safety-related activities; (5) engineering rigor; (6) corrective action effectiveness; (7) internal and external assessment effectiveness; and (8) the employee concerns program. The task force made the following specific observations:

(1) Plant engineering resources appeared to be strained. There was a significant decrease in staffing and operating budgets during the 1990s, particularly in the areas of engineering and capital improvements (e.g., permanent modifications). The task force reviewed the actual expended budgets for Operating and Maintenance (O&M), including the budget for engineering, for years 1991 through 2001 and adjusted the amounts to account for inflation. Using 1991 as the "base" year, the engineering portion of the O&M budget effectively decreased by almost 60 percent. Similarly, the number of Engineering staff decreased from 218 in 1991 to 123 in 2001 (i.e., a 44 percent reduction). While the task force did not assess the effects of these declines in great detail, information gained from interviews with selected engineering managers and staff members indicated that plant

problems were not always entered into the corrective action program because the problem resolutions identified were often assigned to the person who identified the issue, resulting in an increase in the already high-level of work assignments. Additionally, the RPV service structure modification was delayed about a decade, primarily because of cost considerations.

The effectiveness of system engineers was affected by their workload and experience level. The system engineers were typically assigned multiple systems and collateral duties. For example, the system engineer responsible for the high pressure injection, decay heat removal/low pressure injection, containment vessel normal sump, auxiliary building sumps, emergency core cooling system sumps, spent fuel pool/and cooling (1999 to 2001) and refueling canal (1999-2001) systems, was also assigned as the boric acid corrosion control coordinator. The boric acid corrosion control program lacked effective oversight and ownership. The coordinator's workload had some impact on this condition.

There was high turnover among the system engineers, which resulted in a lack of continuity in performing RPV head inspections. This was illustrated by 11 of 21 system engineers having less than three years of system engineering experience and the large number of engineers who were involved with RPV head inspections and dispositioning of boric acid deposits on the RPV head during the 1996, 1998, and 2000 RFOs. From 1995 to present, three different DBNPS engineers were assigned the RCS system.

(2) Information obtained from licensee records and interviews of DBNPS personnel indicated an overemphasis on production, as evidenced by significant activity to address symptoms of RCS leaks (e.g., CAC and containment radiation monitor filter element fouling) while operating at power but not developing or implementing rigorous plans to find the source of the leaks during outages. Additionally, the licensee would routinely restart the plant following an outage with leaking RCS valves and leaking CRDM flanges. A schedule driven work environment contributed to the failure to remove all boric acid deposits from the RPV head during RFO 12. For example, one manager involved with RFO 12 work control stated that schedule considerations factored into the decision to not completely clean the RPV head. The task force was informed that the equipment used for the RPV head cleaning during RFO 12 was removed after the first day of cleaning activities without first consulting the engineer who was the leader for the activity. The RPV head was moved back to the RPV, in accordance with the schedule, on the day the cleaning equipment was removed.

(3) The continuous nature of RCS leakage symptoms demonstrated DBNPS's willingness to accept degraded plant conditions, provided any related conditions that challenged plant operations could be resolved. Actions to address CAC and radiation monitor filter element fouling were highly visible and received strong management attention. For example, in 2000, CAC fouling was highlighted routinely in the Plant Issues List. While the cause of the fouling and RCS leakage received considerable attention initially, more recent efforts to identify the source of RCS leakage were not aggressive. In RFO 12, only routine inspections to identify containment leaks were performed at the beginning of the outage. For RFO 13, DBNPS elected not to perform the Mode 3 RCS walkdown. This decrease in effort to resolve a problem that had existed for a prolonged period was indicative of management's willingness to accept degraded equipment and was indicative of lack of commitment to resolve issues that clearly had the potential to be significant.

(4) Some managers did not make appropriate decisions involving significant work activities. For example, RFO 12 RPV head cleaning was discontinued once the cleaning equipment was removed even though some managers were aware that not all the boric acid deposits were removed.

Managers did not exhibit a sufficiently questioning attitude with regard to RPV head inspections or cleaning activities, and they were not sufficiently involved in the oversight of RPV head inspections and cleaning activities. A former senior manager stated in an interview that he had no further involvement with RFO 12 RPV head cleaning activities following approval to use water for the cleaning. The task force questioned this decision given the long history of RCS leakage and the condition of the boric acid deposits found on the RPV head at the beginning of the outage. This former manager viewed the videotape of the as-found condition of the RPV head.

Additionally, the practice of assigning supervisors and managers to the outage management organization during RFOs and having other individuals "act" in a manager's normal position contributed to managers being unfamiliar with emerging issues for which they would normally be responsible. One example pertained to the decision to use water as part of the RPV head cleaning in RFO 12. Because of his outage assignment work, the supervisor did not have discussions with the system engineer regarding this controversial method of RPV head cleaning.

(5) The task force identified a longstanding pattern of inadequate engineering rigor. Examples include: (1) the 1992 fouling of the CACs was justified, in part, on the presumption that steam resulting from a LOCA would un-foul the CAC and ensure that CAC cooling satisfied design basis assumptions during a LOCA; (2) the belief that leakage from the pressurizer safety relief valves was the source of boron accumulation on CACs and radiation monitor filter elements without consideration that the discharge from the safety relief valves was from the pressurizer steam space; (3) system engineering not informing operations that saturation of an iodine detector for the containment radiation monitor would cause the detector to be unavailable for several hours; (4) the resolution to CR 2000-1037 not addressing the observation that a lack of positive evidence that a CRDM flange was leaking provided a high probability of a leaking CRDM (i.e., RCPB leakage); and (5) the unsupported evaluation that the source of boric acid deposits on the RPV head was from a CRDM flange leak even though there were no CRDM flange leaks identified in RFO 10 and only minor leakage identified in RFO 11.

(6) Discussions with DBNPS managers indicated that, until the time of the RPV head degradation event, they believed that the DBNPS corrective action program was functioning well. However, the task force identified a number of instances in which corrective actions to resolve plant issues, some of which were significant but were mis-classified as routine, were untimely and ineffective in preventing recurrence of similar types of problems. The task force identified several implementation problems with the corrective actions for the pressurizer spray valve event. For example, the boric acid corrosion control training that was provided to the DBNPS technical staff did not include some individuals who were subsequently involved with the attempts to remove the boric acid deposits that were found on the RPV head in RFO 12. In addition, some individuals who received the training did not understand the implication of red/brown boric acid being

an indication of carbon steel corrosion. This occurred even though the training specifically discussed the signs of corrosion, and was a question on the test given in conjunction with the training.

(7) DBNPS lacked a self-critical perspective. When assessments of safety performance were performed, they were ineffective. Some third-party reviews noted a long history of RCS leaks and the boric acid-induced corrosion of the pressurizer spray valve fasteners, but these reviews did not integrate the available symptoms and indications of RCS leakage. The Nuclear Review Board noted in 2001 that the source of CAC fouling was an active RCS leak but this was already known by the DBNPS staff. The Quality Assurance (QA) assessment report for RFO 12 activities discussed observations of the boric acid corrosion control program implementation and cleaning of boric acid deposits from the RPV head. The report executive summary documented, "Aggressive cleaning of boric acid accumulation from the Rx head," as a positive attribute. Discussions in the body of the report included:

> The audit team evaluated the implementation of the boric acid corrosion control program. Team members participated in and reviewed Mode 5, Mode 3, and RCS hydrostatic inspection results . . . Boric acid leakage was adequately classified and corrected when appropriate. Engineering displayed noteworthy persistence in ensuring boric acid accumulation from the reactor head was thoroughly cleaned.

In interviews with quality assurance personnel, they stated the audit results for RPV head cleaning were formulated on the basis of a review of the CR. The auditors did not observe actual RPV head conditions, cleaning activities, or videotapes.

(8) Prior to its dissolution in 2000, the effectiveness of the Independent Safety Engineering Group (ISEG) in assessing the available information pertaining to RCS leakage was limited. The ISEG was started at DBNPS following the 1985 loss of auxiliary feedwater event. Initially ISEG reported to the nuclear engineering manager, then in 1993, oversight of ISEG was transferred to the Nuclear Assurance Director. In 2000, ISEG was disbanded and its functions were transferred to the QA organization. Former ISEG members stated in an interview that an example of ISEG's functions being transferred to QA was the review performed by QA in RFO 12 to assess actions to identify the source of RCS leakage in containment. Application of engineering principles were the noted attributes for this review. The QA audit of RFO 12 positively reflected on RCS leakage detection activities.

A former ISEG engineer also stated that limited reviews were performed of the pressurizer spray valve event and resolution of RCS leakage symptoms. An Intra-Company Memorandum, dated August 16, 1999, documented ISEG's review of actions taken to resolve RCS leakage prior to and after the April 1999 midcycle outage. The report concluded that DBNPS's overall response to the leak rate was appropriate; however, there was a general lack of ownership and implementation of Operation Procedure, DB-OP-01200, "RCS Leakage Management." The primary concern was with the Action Level classification of the leak rate under DP-OP-01200 and the resulting action that should have been taken. Additionally, ISEG identified some weaknesses with this procedure. While the ISEG review identified several problems with DBNPS's efforts to identify RCS leakage, there did not appear to be any resulting improvements. During the

next major attempt to identify RCS leakage in RFO 12, there was an actual decrease in the comprehensiveness of DBNPS's efforts to identify RCS leakage in containment.

(9) The task force identified implementation problems involving the licensee's employee concerns program. The task force became aware of one concern that did not appear to have been processed in accordance with the Ombudsman Program. This concern involved the extent of RPV head cleaning during RFO 12, which apparently was not processed as a concern by the Ombudsman. In the task force's view, this issue satisfied the criteria specified in the implementing procedure to be treated as an Ombudsman program concern. A review of Ombudsman files and the contact list (year-to-date) did not reveal any recorded information involving this concern.

The task force identified a 1998 Ombudsman concern involving a worker, who was assigned to replace a CAC fan motor bearing during the spring 1998 refueling outage. This worker was concerned that he might receive an uptake of grit-blast paint dust and "boron crystal dust" because he was not provided a respirator. Licensee personnel assigned to investigate the concern confirmed the presence of boric acid residue on the CAC, but did not identify the source of the boric acid deposits.

3.2.5.2 Recommendations

To address the issues discussed in this section of the report, the task force made the following recommendations:

(1) The NRC should develop inspection guidance to assess scheduler influences on outage work scope.

(2) The NRC should revise its inspection guidance to provide assessments of: (1) the safety implications of long-standing, unresolved problems; (2) corrective actions phased in over several years or refueling outages; and (3) deferred modifications.

3.3 NRC Assessment of DBNPS Safety Performance

The NRC failed to integrate known or available information into its assessments of DBNPS's safety performance. For a number of years, the NRC was aware of the symptoms and indications of active RCS leakage. The NRC even reviewed some of these individual symptoms during routine inspections; however, the NRC failed to integrate this information into its assessment of DBNPS's safety performance. As a result, the NRC failed to perform focused inspections of these symptoms which, if performed, the NRC may have ultimately discovered the VHP nozzle leaks and RPV head degradation. The former SRI became aware of boric acid deposits on the RPV head at the onset of the spring 2000 refueling outage; however, he did not inform his supervisor and did not perform inspection followup. There were other licensee performance data that were available for review, in the context of the NRC inspection program, but the NRC did not review or assess this information. The regional and headquarters program offices viewed DBNPS as a "good performer," which may have been another factor that contributed to the agency's lack of integration of relevant information. Actual and perceived weaknesses with inspection, enforcement, and assessment guidance, as well as inadequate VHP nozzle and RPV head inspection requirements, contributed to NRC's failure to identify the

problem. During the period in which the symptoms and indications of RCS leakage were visible, the managers and staff of the regional office responsible for DBNPS oversight were more focused on other plants that were the subject of increased regulatory oversight. This distracted management attention and contributed to staffing and resource challenges impacting the regulatory oversight of DBNPS. The dissemination of some licensee information resulted in actual and potential missed opportunities for the NRC to have identified the problem. Also, there were a number of licensing process issues that contributed to the NRC's failure to identify the problem.

3.3.1 Reactor Coolant System Leakage Assessment

The NRC was aware of the symptoms and indications of active RCS leaks for a period of years, but this did not lead to focused actions that, if taken, could have resulted in the identification of the degradation of the RPV head and the VHP nozzle leaks. There were a number of highly visible actions taken by the licensee to address the symptoms of the active RCS leaks. Some of these actions were inspected by the NRC, while others were not. Some assumptions made by the DBNPS staff regarding the source of active RCS leaks were not sufficiently questioned by NRC.

Multiple symptoms of RCS leakage inside the DBNPS containment existed from 1998 until the unit was shut down for the 2002 refueling outage (RFO 13). While the NRC inspection effort reviewed many of these symptoms, there was limited assessment and analysis of DBNPS's efforts to identify and resolve RCS leakage. Some inspections recognized and specifically focused on RCS leakage, while other inspections reviewed areas which related to RCS leakage. The inspections in these related areas did not address RCS leakage as part of their assessment of DBNPS's performance. Many of the symptoms of RCS leakage, when reviewed individually, provided minimal insights into the actual degraded condition of the RPV head. To fully assess and recognize the resulting condition of the RCS leak in containment, i.e., RPV head degradation, an integrated assessment of the symptoms was required. Such an integrated review of the RCS leakage symptoms was not performed by the NRC.

3.3.1.1 Detailed Discussion

The task force identified a number of issues involving: (1) awareness of RCS leakage in containment; (2) awareness of CAC and radiation monitor filter element fouling; (3) routine communication of plant issues; (4) level of direction regarding the followup of RCS leakage symptoms and indications; (5) assessment of RCS leakage symptoms and indications; (6) questioning of DBNPS assumptions regarding RCS leakage sources; (7) results of specific NRC inspections; and (8) NRC staff views regarding the significance of RCS leakage symptoms and indications. The task force made the following specific observations:

(1) The symptoms and indications of active RCS leakage were well known among many NRC personnel including the resident inspectors, their supervisor, and one licensing project manager (PM). Regional managers were significantly less familiar with the history of unidentified RCS leakage and its symptoms even though these issues were often discussed at the daily regional staff meeting for a period of about three years. For the period from 1998 through February 2002, unidentified RCS leakage (monthly average) ranged from the normally low value of less than 0.1 gpm to a maximum of 0.8 gpm. The

primary cause of the higher leak rate was a modification to the pressurizer safety relief valve discharge piping in October 1998. Once the normal discharge piping configuration was restored in May 1999, the leak rate decreased, but values ranged between 0.1 to 0.3 gpm until February 2002. The specific indications of RCS leakage in containment included the following:

- There was an increase in unidentified RCS leakage which could not be correlated to any specific source following restoration of pressurizer safety relief valve discharge piping to its normal configuration in 1999.

- The CACs experienced fouling as boric acid particles in the containment atmosphere collected on the CAC cooling fins. As the amount of boric acid fouling increased, corresponding changes in CAC plenum pressure would be seen on the remote indication in the control room. In response to decreasing plenum pressures, the CACs were cleaned, while the unit was on-line, 17 times from November 1998 to May 1999. The change to the pressurizer safety relief valve discharge piping in October 1998, which also directed safety relief valve seat leakage to the containment atmosphere, was viewed by the licensee as the primary cause of the CAC fouling. Eleven additional CAC cleanings were required following restoration of the safety relief valve discharge piping, while the unit was on-line, until February 2002. The frequency of CAC cleaning was higher during the earlier periods of the operating cycle than the latter part of the cycle. This is consistent with higher concentration of boric acid in the RCS at the start of the operating cycle and the gradual reduction of RCS boric acid concentration over the cycle.

- The RCS leakage detection system radiation monitor filter elements experienced fouling from boric acid particles on their filter elements. Air samples are continuously drawn from within the containment, passed through a particulate filter, an iodine sample cartridge and a noble gas detector before being exhausted back into containment. The buildup of boric acid on the filter elements would reduce air flow to a point that filter element replacement was required. To accomplish filter element replacement, the radiation monitors were taken out of service. Prior to the boric acid fouling, the radiation monitor filter elements were replaced each month as routine maintenance. Starting in late 1998, the filter element replacements increased to weekly, then cycled between daily to an irregular one to two week replacement interval. In May of 1999, the radiation monitor filter elements began accumulating a reddish-brown material. The laboratory analysis of the material identified the presence of ferric oxide. Specifically, the analysis stated: “The fineness of the iron oxide (assumed to be ferric oxide) particulate would indicate it probably was formed from a very small steam leak.”

- In each of the 1996, 1998, and 2000 refueling outages, a visual inspection of the RPV head identified an accumulation of boric acid. A corrective action document was initiated for each occurrence to address the condition.

- The task force found boric acid deposits on numerous surfaces in containment. During containment walkdowns, the task force noted rust and boric acid residue on carbon steel surfaces of service water piping, walk-way gratings, cable trays and covers, and CACs. The amount of rust was directly related to the corrosive nature

of boric acid. There were control room log entries documenting the boric acid. For example, a May 22, 1997, control room log entry stated that buildup was noted on the inside of the incore instrument tank and on CAC No. 2.

On the basis of a review of licensee records, as well as interviews with DBNPS and NRC personnel, there was widespread knowledge of RCS leakage in containment, including its symptoms. A former NRC SRI and a former NRC division of reactor projects (DRP) branch chief stated in interviews that they were aware of the leakage and that they discussed with the licensee its efforts to identify and resolve it. The former DRP branch chief maintained a daily logbook of plant status and issues which were discussed with the resident inspectors. The task force was provided a copy of the branch chief's daily logbook for the period from December 1998 to February 2002. The task force noted that symptoms of the RCS leakage, which included at power containment entries to clean the CACs and TS action statement entries stemming from RCS leakage detection system radiation monitor filter element replacement, were discussed in the logbook on numerous occasions, spanning a period of approximately 3 years. The former DRP branch chief stated his normal practice was to discuss the majority of these issues with regional managers and supervisors in the Region III daily staff meeting. Attendance at the daily staff meeting routinely included the regional office first-line supervisors, the regional duty officer, division managers, the deputy regional administrator, and the regional administrator. NRC headquarters staff and managers participated by telephone conference.

Senior managers in Region III did not have the same level of awareness of the RCS leakage symptoms and indications as the former DRP branch chief. One manager recalled the 1999 problems with radiation monitor filter element fouling because of the associated TS action statement entries. Another manager stated that he was briefed on CAC cleaning as part of the preparation for a site visit to DBNPS. The other managers stated they did not recall hearing about or discussing these issues. The regional office procedure for conduct of the daily staff meetings had not been revised since 1994 and did not provide guidance for the content of the meeting as it was presently conducted. On the basis of several daily staff meetings attended by task force members, it was unclear to the task force if the current meeting structure provided an effective means to communicate information to senior managers and to receive their feedback.

(2) The NRC missed two opportunities to identify RPV head degradation and VHP nozzle leaks during NRC inspections conducted during the 1998 and 2000 refueling outages. NRC Inspection Reports 50-346/98-006 and 50-346/00-005 documented inspections of ISI related to the RCS. The 1998 inspection observed a dye penetrant examination of a CRDM housing weld and a visual examination of the RPV head bolt holes. This inspection occurred at about the same period of time as DBNPS's activities to clean and inspect the RPV head. The report did not discuss boric acid on the RPV head or any related issues. In an interview, the inspector did not recall seeing boric acid on the RPV head or on the insulation directly below the CRDM housings. Similarly, during the 2000 ISI inspection, an inspector observed ultrasonic and magnetic particle examinations on the RPV head to flange weld. This inspection occurred during the same week that the video inspection of the RPV head was performed prior to the RPV head cleaning with a power washer. The April 17, 2000, videotape associated with this RPV head inspection depicted significant boric acid deposits on the RPV head. In addition, the inspector

reviewed CR 2000-0781 and verified that the corrective actions were appropriate. This CR described boric acid on the RPV head which prevented the visual inspection of the RPV head flange fasteners. There was no detailed discussion in the inspection report regarding corrective actions for the identification of boric acid on the RPV head. The inspector who performed the 2000 ISI inspection did not recall seeing boric acid on the RPV head or anything unusual about the corrective actions for CR 2000-0781.

(3) With one exception, none of the DBNPS licensing PMs interviewed by the task force recalled discussions regarding RCS leakage, CAC fouling, etc. The licensing PM, assigned to the NRC headquarters office, for DBNPS during 1999, participated regularly on the morning status calls held by the Region III DRP branch staff. The PM recalled that boric acid buildup was discussed by regional personnel and that the licensee was making efforts to find RCS leaks through walkdowns. The PM recalled that there were discussions about the licensee attributing the buildup to leaking pressurizer safety relief valves. Containment air cooler fouling was also discussed in these calls because of concern over the effect that CAC fouling might have on elevated containment air temperature, which was typically experienced during the summer months. The PM assumed that the Region III staff was observing licensee efforts to address the issues.

The Project Manager Handbook discusses the need to maintain communications between the PM and the resident inspectors on site. The guidance also directs PMs to provide highlights of significant information or events to management. However, there is no specific guidance in the handbook regarding participation in the morning plant status calls, nor is there specific guidance regarding the transfer of routine plant status information from those calls. Project manager participation in morning plant status calls with the regional DRP supervisor is an NRC management expectation, but participation appears to be implemented to varying degrees among the PMs.

(4) Regional managers did not provide direction to perform inspection followup of RCS leakage or its symptoms. The former DRP branch chief stated that he discussed RCS leakage and the symptoms with the resident inspectors in an effort to understand the licensee's position regarding the source of leakage and DBNPS's plans to resolve the leakage. The former DRP branch chief stated that during site visits to DBNPS, he routinely discussed RCS leakage issues with the licensee and was provided plausible explanations for the leakage (e.g., CRDM flange leakage and pressurizer safety relief valve seat leakage).

(5) For the period of February 13 - September 13, 1999, five consecutive resident inspector inspection reports (each covering a 6-week period) discussed inspections which related to RCS leakage. While there was some limited assessment of licensee activities, the majority of reports described the RCS leakage, related conditions, such as radiation monitoring filter element fouling, and the licensee's plans to resolve the leakage. Inspection reports documenting inspections conducted after the midcycle outage discussed the reduction in RCS leakage but recognized that radiation monitor filter element fouling continued to occur. The reports also documented that the filter elements had accumulated a dark colored particulate which was determined to be primarily iron oxide (a corrosion product). In the last of these inspection reports which discussed RCS leakage, the report stated that the source of corrosion products was still unknown and that the licensee planned to perform thorough inspections of the containment during the next

refueling outage (i.e., spring of 2000 - RFO 12) to detect the source. These inspections did not provide an assessment of significance of continued RCS leakage in light of the carbon steel corrosion that was occurring within the containment. The task force believes that the discovery of iron oxide particles on the radiation monitor filter elements was critical information that should have provided the NRC with the proper safety perspective on RCS leakage. On the basis of a review of other NRC inspection reports, there were no subsequent documented inspections of the licensee's efforts to identify the source of RCS leakage.

(6) The task force identified deficiencies with the bases for some licensee assumptions. If the NRC would have identified these weaknesses previously by questioning these assumptions more thoroughly, then the NRC would have had additional opportunities to have more aggressively assessed DBNPS's efforts to address the sources of RCS leakage. For example, licensee personnel believed that a significant contributor to CAC fouling was leakage from the pressurizer safety relief valve discharge piping that was temporarily vented into containment atmosphere. NRC Inspection Report 50-346/99-004 discussed the relief valve leakage evaporating into the containment atmosphere, condensing on the CACs and degrading CAC performance to the point that cleaning was required every 10 -14 days. Given the water/vapor leakage from the pressurizer steam space (the part of the pressurizer where the safety relief valves are attached) has a lower boron concentration than the RCS, the task force questioned how much boric acid would actually be released past the leaking safety relief valve seat. It did not appear that this was assessed by DBNPS in 1999. Licensee personnel responded to the task force that some boric acid would carryover into steam at high RCS pressures but the amount would be significantly less than leakage from other parts of the RCS. From interviews with NRC staff and review of inspection reports, the task force concluded this issue was not previously reviewed by NRC.

Additionally, licensee personnel also believed that the other most likely source of RCS leakage that was causing CAC and radiation monitor filter element fouling was CRDM flange leakage. This was believed to be true because of a long history of CRDM flange leakage. During the 1999 midcycle outage, licensee personnel inspected the CRDM flanges. They did not identify any flange leakage. Apparently, this was not recognized by many DBNPS personnel because they continued to believe CRDM flange leakage was a cause of CAC and radiation monitor filter element fouling.

(7) Other inspections provided the NRC with additional opportunities to assess licensee efforts to resolve RCS leakage. Two inspections (NRC Inspection Reports 50-346/99-002 and 01-004) reviewed radiological controls for containment entries to clean the CACs. In 1999, an inspector observed one of the work crews in containment while the CACs were cleaned. The inspection report discussed that the source of the boric acid deposits on the CACs stemmed from a leaking pressurizer safety relief valve. Both inspections assessed the radiological conditions for CAC cleaning but did not assess the implications of the CAC fouling (i.e., continued RCS leakage) or DBNPS's efforts to resolve the leakage.

(8) During interviews, cognizant Region III personnel stated that, at the time that symptoms and indications of RCS leakage in containment were becoming visible, they did not view them as a potentially significant safety issue. Factors that Region III provided to support the basis for this view included RCS leak rates being less than the TS limit and DBNPS

providing plausible explanations regarding the probable sources of leakage. The task force noted other items which independently confirmed this view by Region III. These included: (1) not providing guidance to the resident inspectors for pursuing the leakage under the inspection program; (2) the general lack of awareness by senior managers of the continuing nature of the RCS leakage in containment; and (3) not performing any followup inspection in RFO 12 of the licensee's efforts to identify and correct RCS leakage.

3.3.1.2 Recommendations

To address the issues discussed in this section of the report, the task force made the following recommendations:

(1) The NRC should provide training and reinforce expectations to NRC managers and staff members to address the following areas: (1) maintaining a questioning attitude in the conduct of inspection activities; (2) developing inspection insights stemming from the DBNPS event relative to symptoms and indications of RCS leakage; (3) communicating expectations regarding the inspection followup of the types of problems that occurred at DBNPS; and (4) maintaining an awareness of surroundings while conducting inspections. Training requirements should be evaluated to include the appropriate mix of formal training and on-the-job training commensurate with experience. Mechanisms should be established to perpetuate these training requirements.

(2) The NRC should develop inspection guidance to assess repetitive or multiple TS action statement entries, as well as, the radiation dose implications associated with repetitive tasks.

3.3.2 Inspection Program Implementation

Prior to April 2000, the majority of inspections performed under NRC Inspection Manual Chapter (IMC) 2515, "Reactor Inspection Program Operations Phase," were part of the "core" program which was implemented at all reactor sites. Another constituent of this inspection program was "regional initiative" inspections. These inspections were not mandatory. They could be implemented to inspect areas with identified or perceived licensee performance problems. In April 2000, the NRC's inspection and assessment programs were significantly revised under a new program. Under the reactor oversight process (ROP), baseline (BL) inspections are performed at all reactor sites and they constitute a larger portion of the overall inspection effort. The ROP provides for supplemental inspections, which are performed for problems (findings) that have greater than low safety significance. The inspection program no longer has a "regional initiative" inspection element. The task force reviewed inspections implemented since the 1990s, but focused on inspection activities since 1996, which correlate with the estimated time that head degradation began.

At the beginning of RFO 12, the former SRI became aware of boric acid deposits on the RPV head; however, he did not inform his supervisor and did not perform inspection followup. There were a number of instances in which the NRC had inspected or was familiar with DBNPS performance issues; however, the NRC did not fully recognize or appreciate these problems. There was a period of about 2-½ years in which the NRC had not conducted a corrective action

inspection at DBNPS. Summaries of licensee corrective action documents involving boric acid deposits on the RPV head were reviewed by the NRC during the preparation for the 2001 problem identification and resolution (PI&R) inspection; however, these items were not selected for detailed followup. The cognizant regional staff did not believe that the RCS leakage symptoms and indications were significant enough to followup on during this inspection. While inspection of the licensee's corrective actions stemming from the boric acid corrosion of the pressurizer spray valve was performed as part of the NRC's special inspection of this event, the NRC did not perform an inspection of the implementation effectiveness of the licensee's corrective actions following the issuance of the violation. The only NRC inspection procedure pertaining exclusively to boric acid corrosion control was not used during this special inspection.

3.3.2.1 Detailed Discussion

The task force identified a number of issues involving: (1) awareness of the discovery of boric acid deposits on the RPV head; (2) recognition of DBNPS performance issues; (3) corrective action program implementation; (4) followup of an escalated enforcement action; (5) boric acid corrosion inspection guidance usage; (6) followup of licensee plans to identify RCS leakage sources; and (7) ROP transition activities. The task force made the following specific observations:

(1) The former SRI stated in an interview he was aware that the licensee discovered boric acid deposits on the RPV head at the onset of RFO 12; however, he decided not to perform inspection followup and he did not notify his supervisor. The former SRI stated that he typically reviewed CRs on a daily basis, and recalled that the boric acid condition was not regarded by him as being significant at the time. Also, he believed that boric acid on the RPV head would be properly resolved on the basis of his favorable review of DBNPS's boric acid corrosion control program and corrective actions planned and taken by the licensee in response to the boric acid corrosion of the pressurizer spray valve. The former SRI had performed a special inspection of this issue during the previous year. The former SRI's recollection of the condition was that there were white boric acid crystals on the RPV head, with no indication that the quantity of boric acid was significant. Condition Report 2000-0782 documented the boric acid that was discovered on the RPV head in RFO 12. The condition description stated:

> Inspection of the Reactor Flange indicated Boric Acid leakage from the weep holes (see attached pictures and inspection record). The leakage is red/brown in color. The leakage is worse on the east side weep holes. The worst leakage from one of the weep holes is approximately 1.5 inches thick on the side of the head and pooled on top of the flange. . . . The total estimated quantity of leakage through the weep holes and resting on the flange is 15 gallons. All leakage appears to be dry. Preliminary inspection of the head through the weep holes indicates clumps of Boric Acid are present on the east and south sides. . . .

Additionally, the pictures attached to CR 2000-0782 provided a visual representation of the significance of the boric acid deposits.

Condition Report 2000-1037 was subsequently written to disposition the boric acid on the RPV head. The CR description stated: "Inspection of the reactor head indicated

accumulation of boron in the area of the CRDM nozzle penetrations through the head. Boron accumulation was also discovered on the top of the thermal insulation under the CRDM flanges. Boron accumulated on the top of the thermal insulation resulted from CRDM flange leakage."

In his interview, the former SRI stated he was not certain which particular CR he may have reviewed. Under the ROP, Appendix D, Plant Status, to IMC 2515 provides guidance for problem identification. It states: "Review the licensee's deficiency or non-compliance reports to become aware of safety significant problems that can be followed up through elements of the baseline program." The condition described in CR 2000-0782 should have been viewed as a potentially safety significant problem and received followup by the baseline program. Knowledge of the RPV head condition in conjunction with the chronic indications of RCS leakage within containment should have resulted in further questioning by NRC. If such questioning had occurred, then the NRC might have identified the VHP nozzle leaks and RPV head degradation in the spring of 2000. Since this information was not communicated to the region, an opportunity was lost for the region to provide guidance or consider the need for a followup inspection.

(2) On the basis of a review of DBNPS records and interviews with DBNPS personnel, the task force identified several DBNPS performance problems that the NRC inspectors were familiar with or had inspected; however, the NRC did not fully recognize or appreciate these problems. The task force believed a probing inspection would have been successful in identifying these issues. Examples included: (1) an apparent lack of operability limits for CAC plenum pressure or current justification that boric acid fouling would not affect CAC post accident function; (2) no DBNPS evaluation to support the use of a kerosene heater in containment for CAC cleaning; (3) the TM that changed the pressurizer discharge piping configuration stated that boric acid corrosion of carbon steel components was not a concern, but provided no basis to support this view and the TM did not thoroughly address the loss of seat leakage assessment capability as discussed in UFSAR, Section 5.2.4.7; and (4) the TM which bypassed the containment radiation monitor iodine elements did not fully evaluate the impact of non-conservative errors in radiation monitor indications or fully explore a loss of post-accident emergency preparedness data.

(3) Approximately 2-½ years elapsed between successive NRC inspections of the licensee's corrective action program. If more timely inspections had been performed, the NRC may have recognized that DBNPS's efforts to locate and correct RCS leakage in containment were inadequate. The licensee's corrective action program was inspected under the IMC 2515 core program in August 1998 in accordance with Inspection Procedure (IP) 40500, "Effectiveness of Licensee Controls in Identifying, Resolving, and Preventing Problems." This inspection did not review any issues related to RCS leakage in containment or boric acid on the RPV head. On the basis of the timing of this inspection and the limited information available in 1998, the task force did not consider this unexpected. The frequency of performing IP 40500 inspections under the core program was every Systematic Assessment of Licensee Performance (SALP) cycle, which for DBNPS was every two years. The next review of DBNPS's corrective action program was the PI&R inspection in February 2001. This was performed under the ROP, which initially required a PI&R inspection to be performed during each annual assessment cycle. The first ROP assessment period was from April 2000 to March 2001. In light of the ROP

expectation to perform a PI&R inspection each year (at that time), the PI&R inspection should have been performed earlier in the ROP assessment cycle.

(4) The NRC did not perform a close-out, verification inspection of the implementation effectiveness of the licensee's corrective actions in response to the NRC escalated enforcement action associated with the boric acid corrosion of the pressurizer spray valve, which was inconsistent with the inspection guidance that existed at the time. On August 6, 1999, the NRC issued an escalated enforcement action because of violations associated with the boric acid-induced corrosion of three of eight body-to-bonnet nuts of the pressurizer spray valve. The NRC issued a Severity Level III violation for inadequate material control involving the installation of carbon steel nuts in lieu of stainless steel nuts and for failing to implement effective corrective action. An NRC special inspection (NRC Inspection Report 50-346/99-021) of this event reviewed corrective actions, both taken and planned, prior to the issuance of the enforcement action. Enhancements to the boric acid corrosion control procedure, NG-EN-00324, were discussed in the report. Licensee Event Report 34698009 described this event and two corrective action commitments that DBNPS made to the NRC. These included enhancements to the boric acid corrosion control program and training for managers and technical staff on boric acid corrosion control and lessons-learned from the event. Some members of the DBNPS technical staff who were involved with previous and subsequent boric acid corrosion issues did not receive the training. Also, some weaknesses existed in Procedure NG-EN-00324 even though it was revised.

The NRC did not perform a followup inspection of the licensee's corrective actions following the issuance of the violation. There were followup inspections of the LER and Revision 1 to the LER; however, the NRC did not specifically address a review of the completed corrective actions. Inspection Procedure 92902, "Followup - Maintenance," which was in effect at the time for closeout of maintenance related violations, required that the licensee's implementation of corrective actions be reviewed. Following the issuance of the enforcement action, the inspection record does not indicate that the NRC inspected/reviewed corrective action implementation associated with the licensee's boric acid corrosion control program. Region III managers provided differing views regarding the closeout of the violations. Some managers thought that closeout of the LERs (inspection of Revision 1 of the LER focused on reviewing the licensee's assessment of the functionality of the valve rather than the boric acid corrosion control program) and the review performed during the special inspection was sufficient, while other managers believed that a violation closeout should have included a review of corrective action implementation. Also, some managers viewed the pressurizer spray valve event as a material control problem rather than a boric acid corrosion control problem. An additional inspection of DBNPS's boric acid corrosion program would have provided an opportunity to identify some of the program weaknesses identified by the task force.

(5) Inspection Procedure 62001, "Boric Acid Corrosion Prevention Program," was included in Appendix B to the former IMC 2515 program, which listed regional initiative (i.e., non-mandatory) inspection procedures. This inspection procedure was not used during the special inspection of the pressurizer spray valve event. The task force believed that IP 62001 should have been used to provide structured guidance for the special inspection. While the use of IP 62001 may not have altered the conclusions of the special inspection with regard to the boric acid corrosion control program, its use would have ensured that

the review included important programmatic aspects. For example, the procedure provides guidance to review licensee procedures for locating small RCS leaks (i.e., leakage rates at less than the TS limit). As previously discussed, the licensee's procedure did not list Alloy 600 nozzles as principal leak locations.

(6) The NRC did not perform a followup inspection in response to the licensee's intention to systematically search for active RCS leak sources during RFO 12. On the basis of the limited information that DBNPS was able to locate for this planned effort, it appeared that only routine outage inspections were performed to identify RCS leakage in containment. This was contrary to a corrective action specified in CR 1999-1300 to issue an action plan for containment walkdowns in RFO 12 to identify the source of the red/ brown boric acid deposits on the containment radiation monitor filter elements. The NRC was aware of the unsuccessful attempts by the licensee to identify RCS leakage that was causing CAC and radiation monitor filter element fouling, as well as, the red/brown boric acid deposits; however, there were no subsequent NRC documented inspections of DBNPS's efforts to identify RCS leakage. Since indications of RCS leakage were continuing, there was a sufficient basis to perform additional inspections. These inspections could have identified problems with DBNPS's efforts to identify the source of RCS leakage in containment.

(7) As part of the analysis for why there was no inspection followup of the boric acid on the RPV head, the task force noted that the transition to the initial implementation ROP began during RFO 12. The resident inspectors stated that additional effort was required to understand and plan for the ROP. This may have created an additional distraction in the followup of outage issues during RFO 12.

(8) NRC managers and staff members did not provide insights to the PI&R team relative to the symptoms and indications of active RCS leakage. Guidance for PI&R inspections is provided by IP 71152, "Identification and Resolution of Problems." The general guidance section of IP 71152 states: "Additional insights for determining appropriate samples can be obtained by region-based inspectors through discussion with resident inspectors or regional inspectors who are familiar with site issues and who are familiar with the licensee's problem identification and resolution process." Routinely, the DRP branch chief and other managers provide insights to the PI&R team on problem areas that the PI&R inspectors may consider for followup review. On the basis of interviews with the 2001 PI&R team members and regional managers, there were no suggestions to review any of the ongoing symptoms or CRs related to RCS leakage in containment or boric acid on the RPV head. In the interview, the former DRP branch chief stated that he did not consider the RCS leakage in containment significant enough to warrant followup by the PI&R inspection. The chronic nature of the RCS leakage and the licensee's ineffective corrective actions were the types of issues that IP 71152 intended for PI&R followup.

(9) In preparation for the 2001 PI&R inspection, the PI&R team screened a summary listing of abbreviated CR descriptions, which included CR summaries that involved the identification of boric acid deposits on the RPV head during RFO 12. However, these items were not selected for inspection followup. For CR 2000-0782, the abbreviated description was, "Inspection of the reactor flange indicated boric acid leakage from the weep holes." On the basis of this screening, this CR was not selected for inspection followup. As previously discussed, the actual condition description for CR 2000-0782 contained a

substantial amount of information on the type, quantity, and location of the boric acid. Inspection Procedure 71152 does not specify the manner in which licensee identified problems are selected for PI&R review (e.g., review entire problem descriptions rather than an abbreviated description). With the large number of CRs typically written in a year (e.g., thousands per year), reading each CR description is not practical during a PI&R inspection.

3.3.2.2 Recommendations

To address the issues discussed in this section of the report, the task force made the following recommendations:

(1) The NRC should develop inspection guidance for the periodic inspection of PWR plant boric acid corrosion control programs.

(2) The NRC should revise the overall PI&R inspection approach such that issues similar to those experienced at DBNPS are reviewed and assessed. The NRC should enhance the guidance for these inspections to prescribe the format of information that is screened when determining which specific problems will be reviewed.

(3) The NRC should provide enhanced Inspection Manual Chapter guidance to pursue issues and problems identified during plant status reviews.

(4) The NRC should revise its inspection guidance to provide for the longer-term followup of issues that have not progressed to a finding.

3.3.3 Integration and Assessment of Performance Data

Current and past NRC assessments of DBNPS's overall safety performance indicated a high-level of performance. Notwithstanding these assessments, the task force identified that there was a lack of integration of relevant inspection data into the NRC assessments of DBNPS's safety performance. In one instance, one of the symptoms of active RCS leakage was addressed in a plant performance review assessment, but there was no subsequent focused inspection followup. The NRC process for highlighting assessment items did not capture relevant information documented in inspection reports. Following the transition to the ROP, there were no findings pertaining to the symptoms and indications of the problem even though there were performance issues that should have resulted in findings.

3.3.3.1 Detailed Discussion

The task force identified a number of issues involving: (1) the results of plant performance reviews prior to the implementation of the ROP; (2) the results of ROP assessments; (3) the integration of RCS leakage symptoms and indications into performance assessments;

(4) the characterization of an inspection finding; and (5) information needed to have integrated the available information. The task force identified the following specific observations:

(1) NRC assessments of DBNPS's performance during the period of February 1997 through March 2000 failed to accurately assess the information pertaining to the symptoms and indications of RCS leakage. Prior to the implementation of the ROP, only one item involving active RCS leakage was identified in an NRC assessment of DBNPS's safety performance; however, the NRC did not perform any followup inspections in response to this issue. The NRC viewed DBNPS as a good performer. This view was shared by nearly all Region III interviewees, the NRR PMs and resident inspectors. The last SALP, which was an NRC process used to assess licensee performance until the program was terminated in 1998, was for the period from January 22, 1995, to January 18, 1997. This assessment reflected a high level of DBNPS safety performance. Specifically:

- For the 3-year period between the last SALP assessment and ROP implementation in April 2000, the plant performance review (PPR) process was used to assess DBNPS's performance. This occurred during the transition between the termination of the SALP process in September 1998 and ROP implementation in April 2000. The task force identified only one discussion item in the PPR summaries for this period involving RCS leakage in containment or its symptoms. For the PPR review that ended on January 31, 1999, the "Material Condition" section of the summary noted that unidentified leakage was more than half the allowed value and the CACs needed to be cleaned on a regular basis due to boric acid buildup. No future inspections were recommended in the PPR to address this area. In the letter to DBNPS, dated March 26, 1999, which transmitted the PPR results, there was no discussion of RCS leakage, CAC cleaning or assessment of the licensee's corresponding actions.

- The subsequent PPR, which covered the period from February 1, 1999, to January 31, 2000, did not identify any problems or issues with continued containment RCS leakage and related symptoms even though there were intensive efforts by DBNPS to address the symptoms of the active RCS leakage during 1999. Neither the PPR summary nor the letter to DBNPS, dated March 31, 2000, discussed any related items. The task force noted that the plant issues matrix (PIM), which contained a historical listing of plant issues, did not fully reflect the inspection results for this PPR period. The results from the five consecutive resident inspector reports that discussed inspections related to RCS leakage were not fully developed in the PIM. For example, only two PIM entries were taken from these reports and they positively portrayed DBNPS's efforts to shut down early for the 1999 midcycle outage and their aggressive efforts to identify the source of radiation monitor filter element fouling. There were no PIM entries regarding the dark colored particles in the radiation monitor filter elements that were determined to be iron oxide. Also, there were no PIM entries indicating that the source of corrosion products still had not been identified. The failure to include all pertinent information in the PIM from these reports contributed to the PPR not assessing performance lapses. In interviews with the NRC staff, the task force was informed that PPR meetings focused extensively on plants that were the subject of additional regulatory

oversight, while plants that were perceived as good performers received substantially less discussion of performance issues.

(2) Regarding plant assessments conducted under the ROP, there was no discussion of RCS leakage in the containment, the accompanying symptoms, or boric acid on the RPV head. The ROP assessment process reviews problems (designated as “findings” by the ROP) that have a significance of Green or greater. Findings are classified by the significance determination process (SDP) with the lowest rating being Green (i.e., very low safety significance). Under the ROP, the NRC identified numerous Green findings at DBNPS but none of these findings pertained to RCS leakage in containment or boric acid corrosion control. The ROP assessment process also reviews performance indicators (PIs) that licensees report to the NRC. For PIs that cross the Green threshold, the NRC will respond by conducting additional inspections and other regulatory actions. The PI that monitors RCS leakage was relevant to the performance issues experienced at DBNPS. The Green threshold for this PI is one half the TS limit for RCS allowable leakage. For DBNPS, this value is 0.5 gpm for unidentified RCS leakage, which was not exceeded while the ROP was in place. If this PI had it been in effect at the time, then it would have been in the White band in 1999 when RCS unidentified leakage reached a value of 0.8 gpm. The NRC response under the ROP would have been a supplemental inspection to review the corrective actions for the root cause(s) of the condition. While NRC’s assessment of DBNPS’s performance conformed to the ROP guidance relative to the identified findings and PIs, as previously noted, related performance issues existed at DBNPS which should have been characterized as findings.

(3) The unreliability of the radiation monitor subsystem trains of the RCS leakage detection system caused by fouling with boric acid and iron oxide particles, as well as, DBNPS’s numerous actions to address the symptoms of this condition rather than resolve the root cause, represented an additional example of the NRC not fully integrating available information into its assessment of DBNPS’s performance. Data that were available to the NRC included:

- Several unplanned entries into 6 hour TS shutdown action statements because of both trains of the leakage detection system being concurrently inoperable.

- In May 1999, the systems were becoming inoperable so frequently because of filter clogging, that each train was to be removed from service every other day, on a staggered basis, to replace the filter as a pre-emptive measure. Even then, some low flow alarms still occurred.

- Many iodine saturation alarms occurred that required filter replacements. It was unclear from a review of the operator logs whether the affected iodine detector was still in saturation after the filter was replaced and the system declared operable.

- In July 1999 and April 2001, the sample points were changed from the primary location (at the top of D-Rings) to the alternate location (dome or personnel hatch).

While this reduced the frequency of filter replacements, it may have also reduced the effectiveness of the system's leakage detection capability.

- In August 1999, the licensee implemented a TM to install four portable HEPA filtration units in the containment in an attempt to remove the particles that were clogging the filter elements. This activity was documented in NRC Inspection Report 50-346/99-010, which stated the HEPA units were installed to remove the corrosion product particulates in the containment atmosphere that periodically affected the operation of the radiation monitors.

- In November 1999, the laboratory analysis of the presence of material clogging the filters identified the presence of ferric oxide. The iron oxide particles that were clogging the filters were discussed in NRC Inspection Report 50-346/99-008.

- A TM was installed in November 2000 to bypass the iodine sample cartridge because of frequent fouling. This TM was inspected and documented in NRC Inspection Report 50-346/01-013. No findings were identified.

(4) An NRC inspection report executive summary mischaracterized an observation made by the resident inspector staff. The performance information documented in the executive summary is a primary constituent of the PIM assessment data. NRC Inspection Report 50-346/98-018 describes an instance in which letdown cooler isolation Valve MU-1A was found with a packing leak during an on-line containment search for RCS leakage in December 1998. This occurred shortly after the pressurizer spray valve packing leak which corroded three of eight body-to-bonnet fasteners (refer to Sections 3.2.1 and 3.2.4). Following questioning by the NRC inspector regarding the initial work scope, which did not include insulation removal to check for boric acid corrosion, the work was modified to include insulation removal. When the insulation was removed, a body-to-bonnet leak that encompassed about 270 degrees of the seating area was discovered. The licensee implemented repairs to correct the leaks. The inspection report characterized DBNPS's performance in a positive manner for their efforts to minimize the leak. The report's conclusion and executive summary did not capture the limited initial corrective action and that NRC prompting was required to ensure adequate corrective actions were implemented. While the issues associated with the previous problems involving the pressurizer spray valve were factored into the inspection activity, noted performance problems were not considered as part of the NRC assessment of DBNPS for this issue. Increased NRC focus on the licensee's implementation of its boric acid corrosion control program should have resulted in a higher level of licensee attention in this area.

(5) The NRC resident inspector staff was in a unique position to have been aware of the information needed to identify that the VHP nozzles were leaking, but information known by the resident inspector staff was not integrated. To have identified that VHP nozzles were leaking and that the RPV head wastage had been occurring for a prolonged period, the NRC would have had to integrate the following information: (1) unidentified RCS leakage within the containment continuing for a number of years and unsuccessful licensee action to identify the source; (2) some type of carbon steel corrosion had been continuing but the

source was unknown; and (3) during three consecutive RPV head inspections, significant amounts of boric acid deposits were identified but the licensee's belief that the source was CRDM flange leakage lacked merit. Most, if not all, of this information was known by the resident inspector staff by RFO 12.

3.3.3.2 Recommendations

To address the issues discussed in this section of the report, the task force made the following recommendations:

(1) As an additional level of assurance, the NRC should identify alternative mechanisms to independently assess plant performance as a means of self-assessing NRC processes. Once identified, the feasibility of such mechanisms should be determined.

(2) The NRC should perform a sample review of the plant assessments conducted under the interim PPR assessment process (1998-2000) to determine whether there are plant safety issues that have not been adequately assessed.

(3) The NRC should continue ongoing efforts to review and improve the usefulness of the barrier integrity PIs. These review efforts should evaluate the feasibility of establishing a PI which tracks the number, duration, and rate of primary system leaks that have been identified but not corrected.

3.3.4 Guidance and Requirements

There were a number of issues identified involving the adequacy of NRC inspection, enforcement, and assessment guidance, as well as the ASME Code requirements and TS requirements involving RCPB leakage. Until September 2001, the NRC had a specific inspection procedure to review GL 88-05 programs. This non-mandatory inspection procedure and another inspection procedure involving the review of operating experience were canceled following the transition of the ROP because they were infrequently implemented. There were no specific NRC inspection requirements to observe licensee inspections of VHP nozzles and the RPV head. The ASME Code requirements, as they currently exist, do not require the non-visual examination of VHP nozzles; therefore, the characterization of the extent of VHP nozzle cracking and damage is not required. The PWR TS pertaining to RCPB leakage are inconsistent. The NRC has not consistently enforced these requirements, which may have reinforced the general perception that Alloy 600 nozzle leakage was not actually or potentially a safety significant issue. The inspection guidance pertaining to the areas of licensee employee concerns and safety conscious work environment were not adequate to effectively assess these areas. Misconceptions regarding the ROP inspection program scope may have contributed to a lack of followup of some of the RCS leakage symptoms and indications.

3.3.4.1 Detailed Discussion

The task force identified a number of issues involving: (1) the adequacy of NRC inspection guidance; (2) perceptions regarding ROP general guidance; (3) the adequacy of ASME Code requirements; (4) consistency in the application of the enforcement policy; and (5) differences in requirements for RCPB leakage. The task force made the following specific observations:

(1) The NRC inspection procedure governing the inspection of boric acid corrosion control programs was rarely implemented, and it was canceled in 2001 because of its lack of use. Inspection Procedure 62001, "Boric Acid Corrosion Prevention Program," was issued on August 1, 1991. It was subsequently canceled on September 17, 2001. The purpose of the IP was to determine whether licensee boric acid corrosion control programs and their implementation satisfied the requirements of GL 88-05. During the development of this IP, the recommended implementation frequency was once every other refueling outage. When it was issued, the IP was included in Appendix B to the previous IMC 2515 inspection program, which listed regional initiative inspection procedures (i.e., non-mandatory). The task force was unable to determine the rationale for not requiring mandatory inspection of boric acid corrosion control programs at a specific inspection interval. During the 10 years the IP was part of Appendix B, it was used on a limited basis for inspections at only 15 PWR units. The decision to implement IP 62001 as a regional initiative inspection activity and subsequent limited usage resulted in a lack of verification of the implementation effectiveness of licensee boric acid corrosion control programs. In interviews with the NRC staff, some staff members indicated that the inspection resource estimate of 8 hours was not sufficient to review a boric acid corrosion control program and its implementation. In reviewing DBNPS's boric acid corrosion program, the task force agreed that the estimate was low.

(2) There was no explicit guidance in NRC's inspection procedures governing licensee ISI activities to review Alloy 600 nozzles that are potentially susceptible to PWSSC. An NRC inspection area that is related to Alloy 600 nozzle cracking is the review of ISI activities. Applicable inspection guidance is provided by IP 71111.08, "Inservice Inspection Activities." Prior to the ROP, the guidance was prescribed in IP 73753, "Inservice Inspections." As noted in Section 3.3.1, NRC inspections in the 1998 and 2000 RFOs reviewed CRDM and RPV head areas but did not identify any unusual conditions with boric acid deposits on the RPV head or on top of the RPV head insulation. In addition, the guidance in IP 73753 that highlighted the need for inspectors to be aware of signs of boric acid corrosion was not included in IP 71111.08. Specifically, the general guidance of IP 73753 (in effect during the 1998 ISI inspection) stated: "Personnel performing this inspection should also be observant about the general condition of the plant. While traveling to and from the ISI examination sites, the inspector should be looking for evidence of boric acid leakage, rust and water stains, and other indications of deterioration of fluid boundaries. All indications should be noted and explored by questioning the licensee about evaluation and corrective actions for items noted."

(3) The NRC's inspection guidance does not sufficiently emphasize the review and assessment of operating experience. The task force reviewed the previous two NRC inspections of the DBNPS's corrective action program, which included the IP 40500 inspection in August 1998 and the PI&R inspection in February 2001, and noted that

operating experience implementation was reviewed in each inspection. No significant problems with DBNPS's operating experience activities were identified in these inspections. IP 71152, "Identification and Resolution of Problems," provides very limited inspection guidance for reviewing licensee resolution of operating experience issues. Inspection Procedure 90700, "Feedback of Operational Experience Information at Operating Power Reactors," was a regional initiative inspection under Appendix B of IMC 2515 before it was canceled on September 17, 2001. Between November 1994 and October 1999, IP 90700 was used at 29 reactor sites (data on IP 90700 usage for the remaining period that it was in place were not available). The explanation for canceling this IP, along with IP 62001, was the limited utilization of the IPs under the ROP. Both IPs were included in Appendix B, Supplemental Inspection Program, as part of the ROP until they were canceled. Since the ROP provides limited opportunities to use the IPs in Appendix B, these IPs should not have been canceled simply because of limited ROP usage.

(4) The NRC's inspection guidance involving inspections of containments, other inaccessible areas of plants, and passive structures and components is not sufficiently emphasized. For example, Inspection Procedure 71111.20, "Refueling and Other Outage Activities," lists only a few specific activities that would require a containment entry during a refueling outage. One example is the guidance for a containment walkdown prior the reactor startup to verify that debris has not been left which could affect containment sump performance. While this requires a containment entry, interviews of inspectors suggested that the scope of the containment walkdown inspection was not broad enough. Some inspectors mentioned that prior to the ROP, inspectors would typically perform a thorough inspection and walkdown of containment prior to restart. With the current guidance in IP 71111.20, there appears to be a level of uncertainty as to whether this "good practice" will continue to be performed.

(5) Misconceptions regarding the ROP inspection program scope may have contributed to a lack of followup of some of the RCS symptoms and indications. When questioned if the symptoms and indications of RCS leakage in containment were reviewed, a resident inspector stated that the ROP inspection scope did not include a review of some of the symptoms and indications. As examples, the resident inspector mentioned radiation monitor filter element fouling and inspection of the RPV head. In the task force's view, fouling the radiation monitors filter elements with iron oxide and red/brown boric acid on the RPV head were indications of potentially significant problems that were intended to be inspected under the ROP.

(6) There was a wide variation in the number of resident inspector containment entries for the four sites that the task force benchmarked. Determining an adequate number of containment entries by inspectors during refueling outages is directly related to inspection scopes and corresponding inspection activities. In 1998 and 2000, the resident inspector and SRI for DBNPS made a total of seven containment entries during each RFO. To benchmark this information, the task force obtained records of resident inspector containment entries for three other sites in different NRC regions. While a direct comparison could not be made because of the many variables (e.g., different number of reactors per sites and some sites having multiple outages during an operating cycle), the task force noted a wide range in the number of containment entries by the resident inspectors at the four sites. At one site, for the years 2000 and 2001, there were five

entries in each of these years (also there were two RFOs in each year). There were four entries in a year at another site that had only one RFO. There were 16 entries during an RFO at the remaining site. While not fully conclusive, it appeared that there may be inconsistencies in ROP implementation related to the number of inspection activities that are being performed in the containment under the ROP.

(7) One of the criteria for implementing IMC 0350, "Oversight of Operating Reactor Facilities in a Shutdown Condition with Performance Problems," involves the presence of significant licensee performance problem (finding), as defined by the ROP. Following the identification of the RPV head degradation, the NRC implemented IMC 0350. This decision was made even though one of the implementing criteria pertaining to significant findings was not satisfied. Prior to implementation of the ROP, there was no IMC 0350 criterion associated with having a significant finding. NRC senior managers determined that the nature of the DBNPS event was such that the NRC needed to establish a mechanism for communicating issues and corrective actions to external stakeholders, and IMC 0350 was determined to be the most effective means in which to do so. The task force believes that implementing IMC 0350 for the DBNPS event was appropriate even though the implementing criteria were not completely satisfied.

(8) The implementation of NRC's guidance relative to the inspection and assessment of employee concerns programs and safety conscious work environment did not result in the identification of existing problems at DBNPS within these areas, as discussed in Section 3.2.5. The current inspection guidance for review of employee concerns programs and assessments of licensee's safety conscious work environment is provided in IP 71152. These areas may also be reviewed in the context of the NRC's Allegation Management Program. The general guidance section of IP 71152 lists, "Issues identified through employees concerns program," as one of seven areas to review for selecting issues for PI&R inspection. Section 03.03.d, Assessment of Safety Conscious Work Environment, of IP 71152 states that when conducting interviews or observing individuals, as part of other PI&R activities, that the inspectors be sensitive to any indications that plant employees are reluctant to raise concerns. In addition, questions are provided that can be used to help assess whether there are impediments to the establishment of a safety conscious work environment. As previously discussed, a PI&R inspection at DBNPS was performed in February 2001. This inspection was documented in NRC Inspection Report 50-346/01005. The inspection identified no significant findings during the assessment and documented positive comments for the safety conscious work environment attributes that were reviewed. In 1993, Temporary Instruction (TI) 2500/028, "Employee Concerns Program," was performed at DBNPS. The TI, which was issued on July 29, 1993, and canceled on July 12, 1995, was performed at selected plants including DBNPS. The inspection results for DBNPS were documented in NRC Inspection Report 50-346/93017. There were no negative issues documented in the report. Limited discussion within the report prevented the task force from assessing the depth of the inspection.

(9) The ASME Code does not require the performance of non-visual inspections to characterize the extent of cracking of VHP nozzles. Item B15.10 of Table IWB-2500-1 of Section XI of the ASME Boiler and Pressure Vessel Code requires the performance of an RCS leakage test at nominal operating pressure prior to plant startup following each

reactor refueling outage. The acceptance standard for this test is IWB-3522, which references the following criteria: (1) IWA-5241 requires a direct visual examination, known as a VT-2, of the accessible external exposed surfaces of pressure retaining components for evidence of leakage from non-insulated components, and; (2) IWA-5242 states that, for insulated components, the VT-2 examination may be conducted without removing insulation by examining the accessible and exposed surface and joints of the insulation. When performing such examinations, the surrounding area shall be examined for evidence of leakage. Discoloration or residue on surfaces examined shall be given particular attention to detect evidence of boric acid accumulations from borated reactor coolant leakage. Corrective measures are specified in Article IWA-5250, which requires leakage sources of boric acid residues, and areas of general corrosion, to be located. Article IWA-5250(b) also requires that components with areas of general corrosion that reduce the wall thickness by more than 10 percent shall be evaluated to determine whether the component may be acceptable for continued service, or whether repair or replacement is required.

In addition to the leakage test following every refueling outage, once every ten years, near the end of each 10-year ISI interval, the licensee is required to perform a hydrostatic test of the RCS at a pressure slightly above nominal operating pressure. During this hydrostatic test, the licensee is also required to perform a VT-2 of the external surfaces of 25 percent of the partial penetration welds for VHP nozzles in accordance with item B4.12 of Table IWB-2500-1.

The licensee's performance of these ASME Code inspections did not result in the identification of the VHP nozzle cracking or leakage. The scope of these ASME Code requirements has been the subject of on-going discussions within ASME. Also, in September 2001, NRC staff members who serve on ASME Code committees, proposed that the inspection requirements be changed to VT-2 examination of 100 percent of the RPV head surface or under the head NDE capable of detecting and sizing cracking. However, even if these changes were to be adopted, inspections to characterize the extent of VHP nozzle cracking would still be optional. Also, bare metal inspections of all other nickel-based alloy nozzles would not be required.

(10) The TS prohibiting power operation with known RCPB leakage are inconsistent and there have been few instances of NRC enforcement of violations involving RCPB leakage. Additionally, inconsistent enforcement treatment of RCPB leakage requirements may have reinforced the general belief that Alloy 600 nozzle cracking was not actually or potentially a significant safety issue.

The identification of small RCPB leakage typically occurs following a plant shutdown. Therefore, relying on boric acid residues to indicate that through-wall or through-weld Alloy 600 nozzle leakage has occurred is a lagging indicator of RCPB leakage. Interviews of NRC staff indicated mixed views regarding the effectiveness of RCPB leakage requirements, including NRC enforcement to ensure compliance with them. In one instance, a senior NRC manager suggested that RCPB leakage requirements were straightforward; thereby, resulting in a high degree of compliance and relatively few enforcement actions. Other NRC managers believed that NRC staff views regarding

passive component failures, in conjunction with a lack of clear enforcement guidance for the treatment of Alloy 600 nozzle leaks, were the primary reasons for a lack of enforcement.

Several factors appear to have contributed to a lack of consistency in NRC's enforcement of RCPB leakage requirements, including different TS requirements governing RCPB leakage, differences in NRC staff views regarding the treatment of passive component failures, differences in NRC staff views regarding whether a VHP nozzle leak constitutes a performance issue under the ROP, and a lack of specific enforcement guidance. The task force identified few documented enforcement actions involving RCPB leakage requirement violations. For the few cases identified, there was a range of agency responses. In 2001, no enforcement action was taken for a leaking VHP nozzle at ANO because the licensee complied with its TS in that the plant was shutdown at the time of the discovery of the VHP nozzle leakage. The NRC granted enforcement discretion in the cases involving VC Summer and ONS in 2001 because these issues were viewed as isolated passive component failures. Previously, in 1997, the NRC cited a violation in a case involving Alloy 600 RCS instrument nozzle cracking at SONGS. For the SONGS enforcement action (EA 97-414), the NRC cited a violation of the Maintenance Rule (10 CFR 50.65) rather than the TS requirement pertaining to RCPB leakage. One of the issues raised at that time was the inability to determine the date in which the cracking progressed to leakage while the plant was operating. Also, during the predecisional enforcement conference, the licensee presented information from NRC's 1993 SER in which it asserted that the NRC and industry have recognized that leakage due to PWSCC of Alloy 600 nozzles is not an immediate safety concern because the NRC staff believes that catastrophic failure of a nozzle is extremely unlikely.

Regarding the different TS requirements governing RCPB leakage, the applicable TS for DBNPS states: "With any pressure boundary leakage, be in at least hot standby within 6 hours and in cold shutdown within the following 30 hours." Other plants, such as TMI, have different criteria in their action statements. The TMI TS 3.1.6.4 states: "If any reactor coolant leakage exists through a nonisolable fault in the RCS strength boundary (such as the reactor vessel, piping, valve body, etc., except the steam generator tubes), the reactor shall be shutdown, and cool-down to the cold shutdown condition shall be initiated within 24 hours of detection." Until the licensee for ANO recently changed its TS, it had a similar requirement. This explains why no enforcement action was taken in the ANO case previously discussed. The DBNPS TS language is the standard/improved standard wording found in the majority of plant TS.

3.3.4.2 Recommendations

To address the issues discussed in this section of the report, the task force made the following recommendations:

(1) The NRC should review its inspection guidance pertaining to refueling outage activities to determine whether the level of inspection effort and guidance are sufficient given the typically high level of licensee activity during relatively short outage periods. The impact of

extended operating cycles on the opportunity to inspect inside containment and the lack of inspection focus on passive components should be reviewed. This review should also determine whether the guidance and level of effort are sufficient for inspecting other plant areas which are difficult to access or where access is routinely restricted.

(2) The NRC should strengthen its inspection guidance pertaining to the periodic review of operating experience. The level of effort should be changed, as appropriate, to be commensurate with the revised guidance.

(3) The NRC should develop inspection guidance or revise existing guidance, such as IP 71111.08, to ensure that VHP nozzles and the RPV head area are periodically reviewed by the NRC during licensee ISI activities. Such NRC inspections could be accomplished by direct observation, remote video observation, or by the review of videotapes. General guidance pertaining to boric acid corrosion observations should be included in IP 71111.08.

(4) The NRC should revise IMC 0350 to permit implementation of IMC 0350 without first having established that a significant performance problem exists, as defined by the ROP.

(5) The NRC should review the range of NRC baseline inspections and plant assessment processes, as well as other NRC programs, to determine whether sufficient programs and processes are in place to identify and appropriately disposition the types of problems experienced at DBNPS. Additionally, the NRC should provide more structured and focused inspections to assess licensee employee concerns programs and safety conscious work environment.

(6) The NRC should provide ROP refresher training to managers and staff members.

(7) The NRC should reassess the basis for the cancellation of the inspection procedures that were deleted by Inspection Manual Chapter, Change Notice 01-017 to determine whether there are deleted inspection procedures that have continuing applicability. Reactivate such procedures, as appropriate.

(8) The NRC should encourage ASME Code requirement changes for bare metal inspections of nickel based alloy nozzles for which the code does not require the removal of insulation for inspections. The NRC should also encourage ASME Code requirement changes for the conduct of non-visual NDE inspections of VHP nozzles. Alternatively, the NRC should revise 10 CFR 50.55a to address these areas.

(9) The NRC should review PWR plant TS to identify plants that have non-standard RCPB leakage requirements and should pursue changes to those TS to make them consistent among all plants.

3.3.5 Staffing and Resources

Regional staffing and resource issues challenged the NRC's ability to provide effective regulatory oversight of DBNPS. Because DBNPS was viewed as a good performer, other Region III plants with recognized areas of concern received priority treatment with respect to resource allocation. As a result, NRC inspection and oversight resources provided to DBNPS were minimal during much of the period in which RCS leakage in containment, including its symptoms, were occurring. During the period that RCS leakage symptoms and indications were becoming evident, there were unfilled vacancies for resident and region-based inspector positions for significant periods of time. The regional branch that had oversight responsibility for DBNPS also had oversight responsibility for another plant that was in an extended shutdown for safety performance issues. In 1999, significantly fewer inspection hours were expended at DBNPS relative to other single unit plants within the region. Regional senior manager site visits to DBNPS were relatively infrequent. Two consecutive resident inspector vacancies were filled by NRC staff members who had not previously certified as a reactor operations inspector. The NRC inspector certification process did not provide specific training on boric acid corrosion control and PWSCC of Alloy 600 nozzles.

3.3.5.1 Detailed Discussion

The task force identified a number of issues involving: (1) inspector position vacancies; (2) level of inspection effort; (3) frequency of management site visits; (4) plant oversight priorities; and (5) inspector certification and training. The task force made the following specific observations:

(1) In the late 1990s, the NRC did not maintain the normal staffing levels within the regional branch that had regulatory oversight for DBNPS. For this period, the regional staffing plan for the DRP branch that was assigned oversight of DBNPS was a branch chief, a senior project engineer, an SRI and a resident inspector. The branch chief for DBNPS was assigned to the branch in October 1997 and remained in that position until May 2001. However, the senior project engineer position was vacant from June 1997 until June 1998 (except for a one month period) and from September 1999 until May 2000. During the initial senior project engineer vacancy, the branch chief was also responsible for oversight of the Clinton Nuclear Power Station. This level of oversight required a significant amount of the branch chief's time because Clinton had been shutdown since September 1996 and its NRC oversight was being governed under the IMC 0350 process. Also during the two senior project engineer vacancy periods, DBNPS conducted the 1998 and 2000 refueling outages. The task force concluded that periods of senior project engineer vacancies significantly impacted the branch's oversight of DBNPS during times when the branch chief was focused on another plant, when many of the symptoms and indications of RCS leakage were occurring, and during refueling outages when DBNPS work activities were intensified.

(2) For the approximate one-year period from November 1998 to October 1999, there was only one resident inspector at DBNPS. This occurred when the SRI was transferred to another site, and the selection of a new senior resident inspector became protracted. Initially, the region planned to assign an individual to the DBNPS SRI position; however, when this did not occur, the SRI position was opened to the competitive selection process.

The DBNPS resident inspector was selected for the SRI position. This required the resident inspector position to be filled. During this period, some inspectors from the region and other sites assisted with inspections at DBNPS to complete the core inspection requirements. Also during this period, the SRI was involved with the inspection followup of the pressurizer spray valve event. He was the only inspector assigned to perform the special inspection, and he was involved in the escalated enforcement related activities for the associated inspection findings.

(3) The annual number of Region III inspection hours for DBNPS was less than the RIII average for single unit sites for eight of nine years during the period from 1993 to 2001. Only 1422 inspection hours were expended at DBNPS in 1999. The region's single site annual average was 2558 hours for that year. This coincides with the approximate one year period when there was only one resident inspector at DBNPS. Also, there was not a senior project engineer assigned to DBNPS for the last 3 months of 1999. On the basis of SALP ratings and the PPR assessment results, it was not unexpected that DBNPS received fewer hours that other single unit sites. However, during 1999, when the site only received 1422 inspection hours, CAC and radiation monitor filter element fouling increased dramatically and the midcycle outage occurred. The region's ability to followup on the problems that were occurring at this time was limited by inspection resources applied to DBNPS.

(4) Site visits to DBNPS by Region III senior managers in the last half of the 1990s were relatively infrequent. The purpose of these visits is to ensure: (1) the effective direction of inspection activities; (2) effective communication; and (3) inspector objectivity. Travel and site dosimetry records indicated that no senior managers visited the site in 1998. Also, for the period from July 1999 to February 2002, no DRP senior managers visited DBNPS. Inspection Manual Chapter 0102, "Oversight and Objectivity of Inspectors and Examiners at Reactor Facilities," Paragraph 04.05 (b), states that DRP division director or deputy should make every effort to visit each site at least once every two years. The previous revision of IMC 0102 stated that DRP division director or deputy visits should occur each SALP cycle, which for DBNPS had been 24 months. During this period, the regional administrator and the Division of Reactor Safety deputy division director each visited DBNPS twice.

(5) During the period in which RCS leakage in containment and its symptoms were occurring, including the identification of boric acid on the RPV head, there were three Region III facilities that had been in extended shutdowns under the IMC 0350 process. These plants included: (1) Clinton (shutdown in September 1996 and the IMC 0350 Panel was disbanded in September 1999); (2) D.C. Cook (both units shutdown in September 1997 and the IMC 0350 Panel was disbanded in June 2001); and (3) LaSalle (both units shutdown in September 1996 and the IMC 0350 Panel was disbanded in May 1999). In response to this, Region III management distributed available resources to plants with the greatest perceived needs.

(6) The current resident inspector and the former SRI (who was the resident inspector when first assigned to DBNPS) were not certified as reactor operations inspectors when they were initially assigned to DBNPS. Both were subsequently certified. Not being a certified

inspector at the time of the initial assignment to a resident inspector position detracts from the site's overall inspection effort because the non-certified inspector could only inspect limited areas (only areas they for which there is an interim certification) and the SRI must spend time training the resident inspector. Senior managers in Region III acknowledged that resident inspectors have been placed at sites prior to becoming a certified inspector; however, this choice was made in lieu of the alternative of having longer periods of resident inspector vacancies at sites.

(7) All the inspectors who were interviewed stated they had not received training in the areas of boric acid corrosion and PWSCC of Alloy 600 nozzles. A broad level of experience is essential for generalist inspectors, such as resident inspectors, who are tasked with screening thousands of issues identified each year by a typical licensee corrective action program. Providing training to inspectors is an effective means to supplement areas in which the inspector's experience is limited. IMC 1245, "Inspector Qualification Program for the Office of Nuclear Reactor Regulation Inspection Program," provides the programmatic requirements for the training and certification of NRC inspectors involved with reactor oversight. It does not provide training on boric acid corrosion or PWSCC of Alloy 600 nozzles.

3.3.5.2 Recommendations

To address the issues discussed in this section of the report, the task force made the following recommendations:

(1) The NRC should maintain its expertise in the subject areas by ensuring that NRC inspector training includes: (1) boric acid corrosion effects and control; and (2) PWSCC of nickel based alloy nozzles.

(2) The NRC should reinforce IMC 0102 expectations regarding regional manager visits to reactor sites.

(3) The NRC should establish measurements for resident inspector staffing, including the establishment of program expectations to satisfy minimum staffing levels.

(4) The NRC should develop guidance to address the impacts of IMC 0350 implementation on the regional organizational alignment and resource allocation.

3.3.6 Davis-Besse Nuclear Power Station Communications

Information communicated by the licensee to the NRC resulted in actual and potential missed opportunities for the NRC to have identified the VHP nozzle leaks or RPV head degradation. The licensee's submissions relative to the Bulletin 2001-01 regarding its record of VHP nozzle and RPV head inspections were not consistent with the assessments identified by the task force. Internal licensee documents, such as a newsletter and a QA audit report, as well as material

presented to the NRC, indicated that the RPV head was cleaned even though significant boric acid deposits were not removed from the RPV head during past refueling outages.

3.3.6.1 Detailed Discussion

The task force identified a number of issues involving: (1) information submitted relative to Bulletin 2001-01 (text and copies of photographs); (2) a DBNPS newsletter; (3) a QA audit; and (4) licensee material used in support of presentations made to the NRC. The task force identified the following specific observations:

(1) Through discussions with licensee personnel and a review of documents, including licensee videotapes, the task force identified a number of issues involving the extent and results of DBNPS RPV head and VHP nozzle inspections that differed from the information provided in FENOC's Bulletin 2001-01 submissions. These included: (1) the nature and extent of the boric acid accumulations found on the RPV head during RFO 11 and RFO 12; (2) the ability to perform qualified visual inspections, including the extent to which the RPV head was inspected in the past; (3) compliance with the boric acid corrosion control implementing procedure relative to the RPV head inspections; (4) conformance with GL 88-05 commitments relative to RPV head and CRDM flange inspections; (5) the results of previous VHP nozzle inspections; (6) the bases for the conclusion that CRDM flange leaks were the source of the boric acid deposits that obscured multiple VHP nozzles; and (7) the representations of copies of photographs of VHP nozzles provided to the NRC. If this information had been known in the fall of 2001, then, in the view of the task force, the NRC may have identified the VHP nozzle leaks and RPV head degradation a few months sooner than the March 2002 discovery by the licensee.

(2) The nature and extent of boric acid deposits remaining on the RPV head following RFO 12 were not disclosed to the NRC during presentations made by the licensee regarding Bulletin 2001-01. The NRC staff members stated that no videotapes were shown that depicted significant red/brown boric acid deposits near the center of the RPV head. The NRC staff members recollected that they were shown freeze-frame video images that depicted inspectable VHP nozzles (i.e., free of significant deposits). The written material reviewed by the task force and interviews of NRC staff supported the view that, before February 2002, the NRC was provided photographic information made from video inspections, but not the actual videotapes. This is consistent with information provided by DBNPS personnel. For example, one former DBNPS manager interviewed by the task force, who was involved in the presentations, stated that he did not show the NRC staff the RFO 12 videotape that recorded power washing and inspection activities; however, he stated that he did inform the NRC staff that DBNPS had not removed all boric acid deposits from the RPV head during RFO 12.

A number of current and former DBNPS managers, supervisors, and engineers involved with developing or presenting information to the NRC staff stated that they were aware that boric acid deposits remained on the RPV head following the power washing that occurred on April 28, 2000. Some stated that they knew this at the time of the outage, while others stated that they became aware of it when they viewed the videotape during the latter part

of 2001 in preparation for discussions with the NRC regarding Bulletin 2001-01 VHP nozzle inspections.

Presentations made by FENOC to the NRC staff and managers in the fall of 2001 and winter of 2002 indicated that boric acid deposits remained on the RPV head; however, these presentations did not provide details on the amount and characterization (e.g., red/brown, rust colored, etc.) of the boric acid deposits even though this information was evident in inspection videotapes. Licensee presentations made to the NRC on November 14, 2001, and January 23, 2002, indicated that some VHP nozzles would be masked by boric acid deposits, thus precluding visual inspection for leakage. Slide 5 in the November 14 presentation (entitled Leakage Detection) indicated that previous "inspections provide reasonable level of assurance for nozzles without masking boron deposits." Slides 4 and 5 in the January 23 presentation specify visual inspection for unobscured nozzles and supplemental NDE inspections for obscured nozzles.

(3) A licensee newsletter erroneously portrayed the results of RPV head cleaning activities in RFO 12. This newsletter update on RFO 12 activities issued by the licensee to its staff on April 29, 2000 ("Outage Insider") described the RPV head cleaning activities, and stated that: "The reactor head was successfully cleaned. . . . This was the first time in Davis-Besse history that the reactor head has been cleaned." On the basis of interviews, some licensee staff members who read the newsletter developed the impression that the RPV head was completely cleaned during RFO 12. As previously discussed, a videotape reviewed by the task force indicated that significant boric acid deposits were left on the RPV head at the completion of the RPV head cleaning activities.

(4) A licensee QA audit erroneously concluded that the RPV head was cleaned during RFO 12. A summary of the QA audit associated with RFO 12 addressed the licensee's boric acid corrosion control practices, and concluded that the boric acid accumulation from the RPV head was cleaned. This conclusion contrasted with the videotape that depicted boric acid deposits remaining on the center of the RPV head.

(5) Licensee material used to make a presentation to an NRC Commissioner on April 27, 2001 stated that the RPV head was cleaned and visually inspected during previous refueling outages and that no cracking or leakage was found. However, the RPV head had only been partially cleaned during the previous three refueling outages. Also, licensee corrective action documents which implied potential or suspected VHP nozzle leakage were not adequately resolved, but this was not indicated on the slide.

3.3.6.2 Recommendations

None.

3.3.7 Licensing Process Guidance and Implementation

In a number of instances, the NRC did not provide adequate licensing process guidance to the NRC staff or did not implement existing guidance. The basis for the NRC's decision to accept the licensee's justification to perform VHP nozzle inspections following the cessation of power operations on February 16, 2002, was not well documented. There was a lack of specific guidance for documenting the basis for this decision, and the available, although more general guidance, was not used. Several expectations in the Operating Reactor Project Manager's Handbook involving PM turnover, site visits, and cognizance of plant operational issues were not satisfied in all cases. A license amendment involving the relaxation of operability requirements associated with the RCS leakage detection system radiation monitors was issued without the licensing PM's knowledge that the radiation monitors were highly unreliable because of fouling from boric acid deposits and iron oxide. The NRC staff did not review an ISI summary report submitted to the NRC. This report provided some limited information that had the potential to provide insight into the VHP nozzle leaks and RPV head degradation. Additionally, the NRC staff did not review the EPRI Boric Acid Guidebook because it was not submitted by the industry for NRC review.

3.3.7.1 Detailed Discussion

The task force identified issues involving: (1) the basis for and documentation of the NRC's decision to accept FENOC's justification to operate to February 16, 2002; (2) PM turnover; (3) PM site visits; (4) the processing of license amendments; (5) the review of topical reports; (6) audits and reviews of regulatory commitments; and (7) the review of an ISI report. The task force made the following specific observations:

(1) The NRC decision to accept FENOC's justification to operate until February 16, 2002 (but not until the March 2002 refueling outage), before conducting VHP nozzle inspections was not well documented. The December 4, 2001, letter from the NRC to FENOC accepted FENOC's justification to continue plant operation until February 16, 2002, after which, the licensee committed to perform VHP nozzle inspections as discussed in its November 30, 2001, letter to the NRC. The letter stated that the NRC's decision was made on the basis of information provided by the licensee and information available to the staff regarding industry experience with VHP nozzle cracking. The letter discussed that the licensee's commitments made to support its proposal for continued operation were integral to the NRC's finding. However, the letter does not discuss what specific information from the licensee or from industry was considered. Also, the letter did not discuss the NRC's underlying analysis of the information, and it did not provide the basis for the NRC staff decision in sufficient detail to determine what evaluation or verification was conducted by the NRC.

The December 4, 2001, letter contrasts with the detailed basis provided in the proposed, immediately effective order to shutdown DBNPS. Specifically, the proposed order for DBNPS considered the following: (1) near term inspections were required because of damage detected in other plants and uncertainty/variability in plant susceptibilities; (2) circumferential cracking was a potentially risk significant condition that could result in

gross RCPB failure and LOCA; (3) inspecting for leakage was not sufficient to detect the extent of VHP nozzle damage; (4) visual inspection (ASME VT-2) methods do not provide reasonable assurance that leakage from through-wall flaws would be detected; (5) ASME Code inspection requirements do not require the removal of insulation and do not require the performance of non-visual inspections; and (6) risk consideration, including the assessment that the licensee's risk estimate could not be verified without VHP nozzle inspections. The task force's independent assessment of industry operating experience, as discussed in Section 3.1.1 and Appendix E, supports the conclusion noted in the proposed order regarding the high degree of likelihood that DBNPS was operating with cracked VHP nozzles.

The lack of a detailed documented basis to support the NRC's decision in the December 4, 2001, letter contrasts with processes and guidance applied to other safety-related decisions taken by the NRC. For example, the guidance in LIC-101, "License Amendment Review Procedure," for preparing safety evaluations to support routine license amendment requests specifies the format of the NRC safety evaluation and the expected content of each section in sufficient detail to allow the public to understand the basis for the NRC determination. The staff could have used LIC-101 as guidance since the document itself states that the guidance should be applied, where appropriate to the processing of other licensee requests requiring prior NRC approval. However, the NRC did not have a directly applicable process to guide the NRC through the decision making process or to provide the basis for the decision to be documented.

A significant part of the licensee's argument for continued operation was made on the basis of risk assessments and the effects of proposed compensatory measures. The staff had to evaluate a significant amount of information, which included a considerable level of uncertainty, in the risk assessment. From interviews of NRC staff members and managers, the task force determined that the decision was made on the basis of the effects of compensatory measures, for the incremental period under consideration (about 7 weeks), relative to the potential for the occurrence and consequences of VHP cracking leading to catastrophic failure. The potential for VHP nozzle leakage resulting in RPV head wastage was not considered. A few NRC staff members disagreed with the decision and expressed their positions in the staff caucus. When interviewed by the task force, the misgivings of these NRC staff members appeared to be centered on crack predictions made on the basis of modeling, which they acknowledged involved large uncertainties. Also, they expressed the opinion that risk modeling of the degradation of passive components is problematic for a number of reasons, including a lack of sufficient information to perform the analysis.

(2) In the view of some NRR staff members and managers interviewed by the task force, the positive view of DBNPS's performance influenced decisions that affected the level of regulatory attention of the NRR staff directed to DBNPS. For example, in recent years, there was a higher than normal turnover rate of licensing PMs assigned to DBNPS. One PM held the position for several months in 1999, while another was in the position for about 6 months from 1999 to 2000. For the period from 1990 through 2001, nine different licensing PMs were assigned to DBNPS. This rate of turnover may account, in part, for the lack of awareness among the PMs (with one notable exception) of the RCS leakage

symptoms and indications. The guidance for PMs contained in the Operating Reactor Project Manager's Handbook (the PM Handbook) indicates the desired duration of a PM assignment as 3 to 5 years. The Handbook indicates that shorter assignments can be made to meet agency needs, but that the minimum duration is specified to maximize productivity and consistency. The guidance also stresses the importance of maintaining effective working relationships between PMs and regional staff, especially the site resident inspector.

(3) In addition to the PM turnover rate, infrequent PM site visits may have contributed to the lack of awareness among the PMs of the RCS leakage symptoms and indications. Until recently, none of the three PMs assigned to DBNPS since 1999, including the supervisor, had visited DBNPS. Reasons cited for the lack of visits included: (1) for one PM, the assignment was too short and did not include a plant shutdown period, which would be the most optimal time to visit; (2) the plant was a good performer and other more pressing priorities made conducting a visit difficult (e.g., completing licensing actions to support a planned shutdown); and (3) a lack of management emphasis for making site visits a priority. The PM Handbook, Section 2.4.2, "Interactions with the Regional Office," suggests that PMs make frequent trips to their sites, and states that these visits should be conducted at least quarterly. This guidance is included in a section that provides measures that should be taken to maintain a close relationship between the PM and the site resident inspectors. The task force determined that, in recent years, this was not emphasized. NRC managers placed increased emphasis on the PM's role in headquarters licensing activities. Interviews of cognizant NRC managers revealed that they supported the view that a higher priority has been placed on licensing activities rather than in conducting frequent site visits.

(4) As discussed elsewhere in this report, clogging of the CACs and RCS leakage detection system radiation monitor filter elements with corrosion products were indications of RCS leakage. License Amendment No. 234 included a change for the TS pertaining to these radiation monitors. The NRC issued this amendment on November 16, 1999. The license amendment request (LAR) proposed changing the operability requirements for the RCS leakage detection system radiation monitors, and was part of a more extensive request to move some TS systems to the technical requirements manual and for the RCS leakage detection TS to reflect the B&W Improved Technical Specifications, NUREG 1430. There was no discussion in the evaluation of the then current state of the system or its operating environment. Although not stated in the LAR, this submission was made during a period when frequent filter element replacements were required. If the NRC review had included steps to verify the actual condition of the system, then the operability problems would have been considered and may have led the NRC staff to question the appropriateness of the proposed change. In this case, the review did not include a step to verify actual system conditions. This could have been done by either requesting the information from the licensee or by using information available to the resident inspectors at DBNPS.

The SER content associated with the licensee amendment conformed with the guidance in LIC-101, "License Amendment Review Procedures." However, the NRR office instruction directs the PM to solicit input from resident inspectors to verify information by the licensee. Also, the guidance in the PM Handbook (Section 2.4) discusses expected PM interactions

with resident inspectors and visits to the site. One objective of the guidance is that the PM should be familiar with all aspects of plant operating status. As discussed in Section 3.3.1, the PM was aware of the CAC fouling and licensee efforts to determine the source of the active RCS leak, but the PM was not aware that another symptom was the fouling of the radiation monitor filter elements. If the guidance was implemented, then the PM may well have become aware of the containment radiation monitors' operability problems when the licensee submitted the proposed change.

(5) The EPRI Boric Acid Guidebook was not submitted to the NRC for official review; therefore, the NRC did not present any position on its content. The review of industry generic topical reports is a licensing function performed by NRR. Topical reports are technical reports on specific safety-related subjects submitted by industry organizations that may be reviewed independently of a specific licensing review. Guidance for topical report review is provided in LIC-500, "Processing Requests for Reviews of Topical Reports." The objective of the topical report review process is to improve efficiency by allowing the staff to review a methodology or proposal that will be used in multiple licensing actions. This guidance does not explicitly discuss a process for NRC to initiate reviews of industry reports that are not submitted for review.

(6) The NRC guidance involving the review of licensee changes to its regulatory commitments and auditing these licensee programs was not implemented. Regulatory commitments are documented actions voluntarily agreed to by licensees that, together with applicable regulatory requirements, form the licensing basis for the plant. Many of these commitments are provided in docketed correspondence such as LERs and responses to generic communications. A number of commitments at DBNPS were related to boric acid corrosion control, including measures taken to institute a boric acid corrosion control program in response to GL 88-05. The NRR guidance for managing licensee commitments to NRC is contained in Office Letter-900, "Managing Commitments Made by Licensees to the NRC," and in the PM Handbook[1]. The office letter references NEI 99-04, "Guidelines for Managing NRC Commitment Changes," stating that it provides acceptable guidance for controlling regulatory commitments. The NEI guidance directs licensees to submit a periodic report to the NRC of changes to commitments. Additional NRR guidance regarding licensee commitments to NRC is provided in LIC-100, "Control of Licensing Bases for Operating Reactors." Table 4 in LIC-100, entitled "Regulatory Commitments," discusses NRC verification and monitoring. It states, "The NRC inspection program may review a regulatory commitment associated with a particular issue or technical area. In general, however, the inspection program does not assess how well licensees control regulatory commitments. NRR plans to assess the licensees' commitment management programs and their implementation of those programs. This activity will be performed under the DLPM responsibilities for 'Other Licensing Tasks.'"

The office letter directs PMs to audit the licensee's commitment management program. However, the PM Handbook does not reference the office letter. Also, it does not discuss

[1]NRR is in the process of re-issuing NRR office letters as office instructions. The task force learned that the guidance in Office Letter 900 will be provided in a future office instruction.

the audit requirement, nor does it provide guidance for review or disposition of the periodic commitment change report submitted by licensees. Project managers contacted by the task force were not aware of the requirement, and the three PMs assigned to DBNPS since 1999 had not conducted an audit.

The licensee's letter to the NRC, dated November 15, 2000, provided the periodic Commitment Change Summary Report. It documented two items involving the CACs. Commitment Nos. 014438 and 007319 were related to CAC air flow problems caused by maintenance errors (i.e., not by fouling from boric acid or corrosion deposits). The PMs for DBNPS did not recall reviewing the report. While the specific commitment changes involving the CACs did not represent an opportunity to gain further insight into RCS leakage issue at DBNPS in this instance, without NRC staff review of the report when it was submitted, changes to licensee commitments could go unnoticed by the NRC staff.

(7) The NRC did not review the DBNPS ISI summary report of Operating Cycle 12 and RFO 12. If this report had been reviewed, the NRC might have questioned the repairs made to the five CRDM flanges, which in turn, might have provided an additional opportunity for the NRC to identify and followup on VHP nozzle cracking and RPV head degradation. In accordance with requirements of the ASME Boiler and Pressure Vessel Code, licensees submit ISI summary reports to the NRC after significant inspection, repair and replacement activities are conducted. Reports are typically submitted following refueling outages. The ISI Summary report for DBNPS, dated August 22, 2000, provided the results of the ISI activities related to Operating Cycle 12 and RFO 12. Page 20 of the report lists VHP nozzle to RPV head weld visual inspection results for several VHP nozzle locations. The ISI report documented the repairs to five CRDM flanges during RFO 12. As noted in Section 3.2.2, one of these CRDMs corresponds to VHP Nozzle 3. While the number of VHP nozzles inspected was within the ASME requirement for the percentage of components to be inspected, only the peripheral nozzles were inspected (a number of central nozzles were obscured by boric acid deposits). Also, some of the peripheral VHP nozzles inspected were included in an area of the RPV head that was covered with boric acid deposits (cleaning efforts in the periphery were successful in removing boric acid deposits) at the beginning of RFO 12, but this was not discussed in the ISI summary report.

On the basis of interviews and discussions, the task force found that the NRC rarely reviews the information submitted in ISI summary reports. Apparently, the DBNPS report was not reviewed. Some of the NRC staff contacted did not believe there was value in the NRC review of these reports. There is no specific guidance for review of these reports.

3.3.7.2 Recommendations

To address the issues discussed in this section of the report, the task force made the following recommendations:

(1) The NRC should reinforce expectations for the implementation of guidance in the PM handbook for PM site visits, coordination between PMs and resident inspectors, and PM

assignment duration. The NRC should reinforce expectations provided to PMs and their supervisors regarding the questioning of information involving plant operation and conditions. Also, the NRC should strengthen the guidance related to the license amendment review process to emphasize the need to consider current system conditions, reliability, and performance data in SERs. In order to improve the licensing decision-making process, the NRC should strengthen its guidance regarding the verification of information provided by licensees.

(2) The NRC should establish guidance to ensure that decisions to allow deviations from agency guidelines and recommendations issued in generic communications are adequately documented.

(3) The NRC should evaluate the adequacy of analysis methods involving the assessment of risk associated with passive component degradation, including the integration of the results of such analyses into the regulatory decision making process.

(4) The NRC should revise the criteria for the review of industry topical reports to allow for NRC staff review of safety-significant reports that have generic implications but have not been formally submitted for NRC review in accordance with the existing criteria.

(5) The NRC should fully implement Office Letter 900, “Managing Commitments Made by Licensees to the NRC,” or revise the guidance if it is determined that the audit of licensee’s programs is not required. Further, the NRC should determine whether the periodic report on commitment changes submitted by licensees to the NRC should continue to be submitted and reviewed.

(6) The NRC should determine whether ISI summary reports should be submitted to the NRC, and revise the ASME submission requirement and staff guidance regarding disposition of the reports, as appropriate.