11.5 ELECTRICAL SYSTEMS

11.5.1 Function

The function of the electrical systems is to provide a reliable source of electrical power to the MFFF for normal operations, and upon loss of normal power, to provide power as necessary for the safe shutdown and monitoring of required MFFF equipment and systems. Also included within the bounds of the electrical discipline is the facility communications system whose description has been included herein. The communications system provides multiple means of communications within the MFFF, from the MFFF to parties outside of the facility, and from other local facilities at SRS to the MFFF. The safety functions of the principal SSCs associated with the electrical systems are discussed in Chapter 5.

11.5.2 Description

The MFFF electrical distribution system is comprised of three major subsystems: normal power, standby power, and emergency power. The normal, standby, and emergency subsystems each distribute both alternating current (AC) and direct current (DC) power.

The plant voice communications system utilizes standard switched telephones, direct wire telephones, wireless, and a public address system for plant communications.

11.5.2.1 Normal Power System

The normal power system distributes electrical power throughout the MFFF site. The normal power system is not a principal SSC but is described here for information. The normal power system is powered from two sources of offsite AC power. Upon loss of both sources of normal power, the normal power system uses: standby power sources, generators, uninterruptible power supplies (UPSs) and batteries for power (see Section 11.5.2.2).

Normal industrial practices and standards are used for the design and construction of the normal power system (see Section 11.5.7).

11.5.2.1.1 Normal AC Power System

The normal AC power system is a two-source, secondary selective system. This electrical system configuration provides rapid restoration of power with loss of a single primary feeder and provides flexibility to remove buses from service for maintenance. A simplified diagram of the normal AC power system is shown on Figure 11.5-1.

The offsite power system provides power to the MFFF via two offsite connections to the 251-F Area 13.8-kV substation. The onsite power system distributes power throughout the MFFF. Normal power from the offsite feeders is reduced to 4,160 V via two 100% capacity 15/20/25MVA transformers and then is distributed by two 4,160-V switchgear buses. The 4,160-V switchgear buses supply the primary side of the ten 480-V load center transformers, the normal supply to the two 4,160-V emergency buses, and various 4,160-V motor loads throughout the facility. The 480-V transformers supply the 480-V switchgear that is used to power load centers and large 480-V loads, 480-V switchboards and motor control centers (MCCs). Small

loads are supplied from 120/240-V power distribution panels located throughout the facility. These distribution panels are powered via 480-120/240-V transformers that are typically fed from MCC breakers.

The function of the 4,160-V switchgear is to provide power to the various MFFF large loads and distribute power efficiently throughout the facility with minimal losses. In addition, each normal 4,160-V bus provides the normal feed to the associated emergency bus. In normal operation, the normal 4,160-V buses are isolated from each other. If one offsite source is lost and voltage is available on the other normal bus, a delayed transfer is initiated that allows the automatic connection of the two buses. If the transfer does not take place, the standby generators are started, paralleled and connected to the affected bus.

The 480-V normal power system provides power to small loads (typically less than 250 hp) and to distribute power throughout the facility. The 480-V normal power system consists of eight 480-V switchgear lineups, 17 switchboards and 106 MCCs.

The 120/240-VAC normal power system supplies various local small loads, receptacles, plugs, and lights. The system is composed of 480-120/240-VAC, single-phase, dry-type transformers. The 480-VAC primary of each of these transformers is fed from circuit breakers located in 480-VAC normal power MCCs. The 120/240-VAC secondary of each of these transformers is connected to 120/240-VAC, single-phase, three-wire, circuit breaker panelboards located throughout the facility. These panelboards have a main circuit breaker and individual branch circuit breakers. The panelboards include a ground bus and a neutral bus. The short-circuit rating of this equipment is greater than the available short-circuit current at the point of installation. The individual circuit breakers are sized according to the loads serviced and the conductors serving those loads.

11.5.2.1.2 Normal DC Power System

The normal DC power system provides a constant, reliable, source of 125-VDC power of sufficient magnitude to energize/de-energize the trip and closing relay coils of the low-and medium-voltage switchgear breakers that comprise the normal power distribution system and other normal DC power loads.

The normal DC power system is composed of the following:

- Two 60-cell lead acid batteries
- Two associated battery chargers
- Two DC distribution panels.

The normal DC power system battery chargers are powered from a 480-VAC normal power source. Each battery has an ampere-hour capacity sufficient to supply its loads for one hour without the assistance of the associated charger. Each battery charger has a nominal output of 130 VDC. The chargers have ample capacity to supply the steady-state loads under any plant condition and are able to recharge the associated battery to a fully charged condition from the design minimum charged state within 24 hours.

11.5.2.2 Standby AC Power System

The standby power system is not a principal SSC but is described here for information. The standby power system provides power to essential loads that are required to shut the process down in a safe and orderly manner upon loss of normal power. Certain other loads are also powered to facilitate a quick resumption of production and to minimize the economic impact to the facility. Through the use of load shedding, the normal AC power system is realigned, upon the loss of an offsite power source and the failure of the bus transfer scheme, to restore power to the standby loads.

The standby power system is comprised of two diesel-engine-driven generators, approximately 2000kW each, and two 120/208-V essential power UPSs. Included with the generators is the auxiliary equipment necessary for starting and operating the generators. Each generator is connected to a 4,160-V paralleling bus. The total capacity of the generators is sufficient to provide power to 100% of the facility life-safety loads plus the capacity of the standby equipment. The loads on the standby generators are as follows:

- Emergency egress lighting
- Safe haven ventilation
- All loads of each emergency system bus
- Non-IROFS ventilation exhaust fans (at 50% capacity)
- 120/208-V essential power inverters (UPSs)
- Normal 125-VDC battery chargers
- Sintering furnaces
- Miscellaneous process loads
- HVAC units for miscellaneous non-principal SSCs.

The entire emergency power system (medium and low voltage) is included in the standby AC power system. The normal 4,160-V buses and some of the 480-V load centers and MCCs are also part of the standby AC power system.

The standby generators provide power to 4,160-V normal buses in the event that the normal supply is unavailable. The standby generators are connected to the associated 4,160-V normal switchgear via medium-voltage vacuum circuit breakers. The standby generator units are automatically started from rest and are nominally capable of accepting load within 10 seconds at an ambient temperature of 20°F (-7°C). The standby generator units are capable of being stopped or started locally or from the utilities control room and the remote utilities control room. A fuel oil day tank is provided for each generator that will store eight hours, up to a maximum of 660 gallons, of fuel oil. The fuel oil supply tank has sufficient storage capacity to allow each standby generator to operate at 100% load continuously for 24 hours.

The normal power 4,160-V and 480-V systems are described in Section 11.5.2.1, and the emergency 4,160-V and 480-V systems are described in Section 11.5.2.3.

The function of the 120/208-VAC essential power system is to provide power to the process programmable logic controllers (PLCs) and instrumentation loads. The 120/208-VAC essential power system consists of inverters, the two normal batteries, and associated chargers, arranged in

two UPSs. The loss of one source affects only one essential bus. Each essential bus is normally fed from a UPS by an associated battery or charger through paralleled static inverters, or from a 480-V normal bus through a regulating transformer when the inverter power is out of service.

11.5.2.3 Emergency Power System

The emergency power system distributes emergency electrical power to principal SSC loads. The emergency power system is a principal SSC. Upon loss of the normal power source for a train of emergency power, the associated power generator will start and provide power to principal SSC loads. Vital UPSs and emergency batteries are also provided to supply power to principal SSC instrumentation and control (I&C) loads (see Section 11.5.7 for applicable codes and standards).

11.5.2.3.1 Emergency AC Power System

Upon the loss of standby power, the emergency AC power system provides power to principal SSCs. The 4,160-V emergency buses are normally supplied from the 4,160-V normal buses. Upon the loss of the offsite power source and the failure of the bus transfer scheme and the standby generators, the 4,160-V emergency buses are isolated and the emergency generators are started and connected to restore power. Each independent train of emergency components is capable of performing all necessary safety functions.

The emergency AC power system is composed of the following:

- Emergency generators
- 4,160-V emergency buses
- 480-V emergency system
- 480-V UPS
- 120-VAC vital inverter system
- Associated switchgear and MCCs.

The emergency generators are connected to the associated 4,160-V emergency switchgear bus via a medium-voltage vacuum circuit breaker. The emergency generator units are automatically started from rest and are nominally capable of accepting load within 10 seconds at an ambient temperature of 20°F (-7°C). Automatic start of the emergency generators is initiated after normal power is lost and failure of the standby generators to start. The emergency generator units are capable of being stopped or started locally or from the associated emergency control room. A fuel oil day tank is provided for each generator to allow for storage of eight hours, up to a maximum of 660 gallons, of fuel oil. The emergency generator fuel oil system consists of two independent sub-systems, each capable of fuel receipt, maintaining the fuel for long term storage, and the ability to transfer an adequate supply of fuel oil to support its associated Emergency Generator operating at 100% load for seven days.

The emergency generators are the same type as those described for the standby generators, but rated at approximately 1500kW. The controls for the emergency generators are either local or from the associated emergency control room.

The 4,160-V emergency power system provides power to large principal SSC loads, notably the high depressurization exhaust (HDE) fans, and to distribute emergency power to lower voltage levels. The system consists of two independent 4,160-V buses that are normally supplied by an associated normal 4,160-V bus via an incoming supply air circuit breaker on the emergency bus. Each 4,160-V bus supplies the primary side of the low-voltage switchgear transformer and 4,160-V emergency loads. Each 4,160-V emergency bus can also be powered from an associated emergency generator. Each emergency switchgear bus is independent of the corresponding bus on the opposite train.

The 480-VAC emergency power system provides power to small 480-V loads and distributes power to the emergency MCCs. The system consists of two redundant 4,160-VAC to 480-VAC dry-type, load center transformers connected to 480-VAC emergency power switchgear buses by main secondary breakers. The transformer secondaries are high resistance grounded. The load center transformer primaries are each supplied by the associated train 4,160-V emergency bus.

The 480-V load centers typically provide power to MCCs and emergency loads greater than 50 hp and less than 250 hp.

The 480-VAC UPS equipment provides uninterruptible power to the very high depressurization exhaust (VHD) glovebox extraction fans. A dedicated UPS is provided for each of four VHD fans. It consists of a rectifier and inverter and a battery bank capable of supplying power to the VHD fans for one hour. The 480-V UPS allows continuous uninterrupted operation of the VHD exhaust fans with any disturbance in the plant electrical power system. Power supply to the 480-V UPS is restored from either the emergency or standby generators. Power supply restoration is expected to take place in an hour or less.

The 120-VAC vital inverter system supplies power to principal SSC I&C loads. The system consists of two independent and redundant power sources each with sufficient capacity to supply its own vital bus loads. The loss of one source affects only one vital bus. Each vital bus is normally fed from a static inverter emergency battery and charger arranged as a UPS, or from a 480-V emergency bus through a regulating transformer when the inverter is out of service. The UPS normal supply is from a 480-V emergency bus from the same train. The batteries associated with the vital UPS equipment have a one-hour capacity. The 120-VAC vital equipment is located in two separate rooms in the shipping and receiving area. These rooms are designated as the emergency electrical rooms. The battery units associated with the UPS equipment are located in the emergency battery rooms in the same area.

Specific principal SSC loads are identified in Chapter 5.

11.5.2.3.2 Emergency DC Power System

The emergency DC power system provides a constant, reliable, source of 125-VDC power of sufficient magnitude to energize/de-energize the trip and closing relay coils of the low- and medium-voltage switchgear breakers that comprise the emergency power distribution system, some emergency lighting, and any other principal SSCs requiring DC power.

The emergency DC power system is composed of the following:

- Two redundant 60-cell lead acid batteries
- Two associated battery chargers
- Two DC distribution panels.

The battery chargers of the emergency DC power system are powered from a 480-VAC emergency power source. Each battery charger has a nominal output of 130 VDC. The chargers have ample capacity to supply the steady-state loads under any plant condition and are able to recharge the associated battery to a fully charged condition from the design minimum charged state within 24 hours. Each battery is sized for one hour of operation of the connected loads without use of the battery charger. Sufficient physical separation, electrical isolation, and redundancy are provided to prevent a fault in one train of emergency DC power from affecting the other train.

Specific principal SSCs requiring DC power will be identified in the ISA.

11.5.2.4 Communications

The communications system for the MFFF provides multiple means of communication for operations, emergency response, and security. Security communications will be described with the physical security plan and are not considered further in this section. Communications systems are powered from the essential UPSs that are provided power from the standby generators upon loss of normal power. The communication system does not mitigate the consequences of any accident condition, thus it is not a principal SSC. The following sections briefly describe the normal and emergency communications systems.

11.5.2.4.1 Normal Communication Systems

Telephone voice systems will be provided to all MFFF site buildings and areas. These systems include the public switched telephone system and dedicated non-PBX telephone lines.

A public address system will be installed in the telecommunications room of the Administration Building and throughout the MFFF site. This system consists of central amplifiers and electronics, remote microphones, and building speakers. The public address system provides intra-site public address, public address to other facilities in F Area, and public address announcements from other F-Area facilities.

A wireless trunk system will be provided for communications for operations and maintenance personnel.

Fiber optic data highways will be provided throughout the MFFF site. These data highways are as follows:

- Security system fiber optic data highway
- Radiation monitoring/alarm system data highway
- Gamma dosimeter/radiation work permit (RWP) computer system data highway
- MFFF process monitoring and control data highway
- MFFF facility monitoring and control data highway

- SRS interface data highway
- International Atomic Energy Agency (IAEA) monitoring data highway (as applicable).

11.5.2.4.2 Emergency Communication Systems

Dedicated, non-PBX telephone lines will be provided as follows:

- From the MFFF Operations Support Center to SRS Area Emergency Coordinators
- From the MFFF Fire Alarm System to the SRS Operations Center
- Between the MFFF Operations Support Center and the SRS Safety System/Alarm Public Announcement System
- From the MFFF Operations Support Center to the SRS Operations Center, Emergency Operations Center, and Technical Support Center.

Each safe haven will be provided with communication systems, consisting of the telephone, intercom, and public address systems.

11.5.2.5 Monitoring, Testing, Protection, and Breaker Control

The electrical distribution system is designed to be monitored from the utility control system or locally at meters and displays for each bus and major component. The electrical system is also designed to allow periodic testing while operating. The electrical loads are dispersed between buses such that redundant loads are unaffected if one bus is being tested. The normal AC system buses are provided with alternate feeds to facilitate maintenance. Both the standby and emergency generators have synchronizing capability to allow for full-load testing. There are two standby and two emergency generators so that one may be taken out of service for testing while the other remains available for use. For ease of maintenance, switchgear cubicles are "draw-out construction" (i.e., the breaker has the ability to be withdrawn from and inserted into the cubicle by a racking mechanism and to disengage and engage the bus with the same mechanism). The inverters used for PLC power and for the 120-V vital AC system have maintenance bypasses.

MFFF will comply with the periodic and surveillance testing guidance presented in IEEE standards 308, 765, 387, 450 and 338 (as clarified in Regulatory Guide 1.118).

The breakers for the normal electrical system can be controlled from the utility control system or locally. The breakers for the emergency electrical system are controlled from the associated emergency control room or locally. The controls for the emergency electrical system are hard wired.

Protective devices are provided for the electrical distribution system to remove faulted equipment from service, provide automatic supervision of manual/automatic operations, and initiate automatic operations or switching for shutdown or continued safe operation as required.

11.5.3 Major Components

The major components of the electrical system include the following:

- Incoming transformers
- 4,160-VAC normal switchgear
- 480-VAC normal switchgear
- 480-Volt Switchboards
- 480-VAC normal MCCs
- Standby generators
- 120/208-V Essential Inverter System
- 4,160-VAC emergency switchgear
- 480-VAC emergency switchgear
- 480-VAC emergency MCCs
- Emergency generators
- 480-VAC emergency UPS
- Emergency 125-VDC system
- Normal 125-VDC system
- 120-VAC Vital Inverter System.

11.5.3.1 Incoming Transformers

The incoming transformers are 13.8- to 4.16-kV, oil-filled, 15/20/25-MVA, pad-mounted transformers. The transformers have a "self-cooled oil to air" rating of 15 MVA and two "forced air" ratings of 20 and 25 MVA. The transformers are provided with 2-2½% taps above and 2-2½% taps below nominal. The transformers are provided with primary-side lightning arresters and are connected delta-wye with the neutral resistance grounded.

11.5.3.2 4,160-VAC Normal Switchgear

The 4,160-VAC normal switchgear is metal-clad, 5-kV type consisting of vertical sections housing various combinations of circuit breakers and auxiliaries, bolted to form a rigid metal-clad switchgear assembly. The main switchgear bus is made of copper, and the bus and all supports are constructed to withstand the stresses that would be produced by the momentary interrupting ratings of the associated circuit breakers. Circuit breakers are vacuum-type, horizontal draw-out breakers. The normal switchgear is constructed and rated for a three-phase, three-wire, 5-kV system. Control power for the circuit breakers is provided at 125 VDC.

11.5.3.3 480-VAC Normal Switchgear

The 480-VAC normal switchgear lineups consist of free-standing, low-voltage, metal-enclosed switchgear assemblies with low-voltage circuit breakers, nonsegregated phase bus, and protective and metering devices. Control voltage is 125 VDC.

Each 480-VAC switchgear lineup includes a main supply breaker and a tiebreaker that connects each switchgear lineup to the appropriate alternate switchgear lineup tiebreaker. These tiebreakers are sized according to the rating of the main breaker for the switchgear lineup and the expected bus loading. Each switchgear bus is provided with ground detection, and each breaker is provided with the appropriate protective package (i.e., instantaneous, short time adjustable, long time adjustable and ground) based on the load being supplied.

11.5.3.4 480-VAC Switchboards

The 480-VAC switchboard lineups consist of free standing, low voltage, metal enclosed switchboard assemblies with molded case feeder breakers and electrically operated drawout air circuit breakers for the incoming and alternate supply. Control voltage is 125-VDC.

Each 480-VAC switchboard consists of an incoming supply breaker and an alternate supply breaker. These breakers are sized to accommodate the expected bus loading. The feeder breakers consist of molded case circuit breakers sized for the expected load. In most cases the loads are small process MCCs.

11.5.3.5 480-VAC Normal Motor Control Centers

The 480-VAC normal MCCs are free-standing, vertical sections with horizontal and vertical buses bolted together in an assembly with draw-out unitized starter assemblies and breaker compartments. The MCC bus work is sized and braced for the maximum short-circuit current available at the bus.

11.5.3.6 Standby Generators

Each standby generator is wye-connected, high-resistance grounded, and rated at 4,160 V, three phase, 60 Hz, and 0.8 power factor with sufficient capacity, approximately 2000kW each, to supply all principal SSC loads as well as those life-safety loads and loads important for facility production. The generators are brushless, revolving field type with rotating rectifier exciter and solid-state voltage regulator. The generator output breaker is an electrically operated, medium-voltage switchgear breaker. The breaker is rated for greater than or equal to 125% of the generator full-load current and is capable of withstanding the maximum available generator fault current. The generator units are arranged for paralleling operation and also have synchronizing capability in the manual mode for load testing. An electronic overspeed switch is provided and installed in the control panel in addition to the mechanical overspeed switch provided by the generator manufacturer. The engine is a full-compression ignition diesel, single-acting, solid injection, and air-cooled. A redundant electric starting system with redundant batteries is supplied, sized to allow for five cranking cycles. The battery charger is capable of recharging the cranking battery within 12 hours following a duty-cycle discharge.

11.5.3.7 120/208-V Essential Inverter System

The system components for each UPS include the following:

- Normal DC batteries (See Section 11.5.3.14) (sized to allow a one-hour reserve)
- Normal Battery Chargers (See Section 11.5.3.14)
- Inverter Banks and associated static switches and regulating transformers
- A 120/208-VAC, three-phase, four-wire, distribution panel.

11.5.3.8 4,160-VAC Emergency Switchgear

The 4,160-VAC emergency switchgear is metal-clad, 5-kV type consisting of vertical sections housing various combinations of circuit breakers and auxiliaries, bolted to form a rigid metal-

clad switchgear assembly. The main switchgear bus is made of copper, and the bus and all supports are constructed to withstand the stresses that would be produced by the momentary interrupting ratings of the associated circuit breakers. Circuit breakers are vacuum-type, horizontal draw-out breakers. The emergency switchgear is constructed and rated for a three-phase, three-wire, 5-kV system. Control power for the circuit breakers is provided at 125 VDC. Redundant divisions of switchgear allow for maintenance on one division with the redundant division in service.

11.5.3.9 480-VAC Emergency Switchgear

The 480-VAC emergency switchgear lineups consist of free-standing, low-voltage, metal-enclosed switchgear assemblies with low-voltage power circuit breakers, nonsegregated phase bus, and protective and metering devices. Control voltage is 125 VDC.

Each 480-VAC switchgear lineup includes a main supply breaker and load breakers. Each division of 480 VAC switchgear is electrically and physically independent. Each switchgear bus is provided with ground detection, and each breaker is provided with the appropriate protective package (i.e., instantaneous, short time adjustable, long time adjustable, and ground) based on the load being supplied. Redundant 480-V emergency power divisions allow maintenance in one division of switchgear with the redundant division in service.

11.5.3.10 480-VAC Emergency Motor Control Centers

The 480-VAC emergency MCCs are free-standing, vertical sections with horizontal and vertical buses bolted together in an assembly with draw-out unitized starter assemblies and breaker compartments. The MCC bus work is sized and braced for the maximum short-circuit current available at the bus. Redundant equipment allows maintenance on MCCs with the redundant train in service.

11.5.3.11 Emergency Generators

Each emergency generator is wye-connected, high-resistance grounded, and rated at 4,160 V, three phase, 60 Hz, and 0.8 power factor with sufficient capacity, approximately 1500kW each, to supply all required principal SSC loads. The emergency generators are brushless, revolving field type with rotating rectifier exciter and solid-state voltage regulator. The generator output breaker is an electrically operated, medium-voltage switchgear breaker. The breaker is rated for greater than or equal to 125% of the generator full-load current and is capable of withstanding the maximum available generator fault current. The generator units also have synchronizing capability in the manual mode for load testing. An electronic overspeed switch is provided and installed in the control panel in addition to the mechanical overspeed switch provided by the generator manufacturer. The engine is a full-compression ignition diesel, single-acting, solid injection, and air-cooled. A redundant electric starting system with redundant batteries is supplied, sized to allow for five cranking cycles. The battery charger is capable of recharging the cranking battery within 12 hours following a duty-cycle discharge.

During maintenance periods of a single emergency generator, the redundant division electrical system remains available and the standby generators are available. The emergency generators can be synchronized with the 4,160-V bus to allow full-load testing.

11.5.3.12 480-VAC Emergency UPS

The 480-VAC emergency UPS consists of a rectifier/inverter section along with backup batteries with a one-hour capacity. The UPS units are dedicated to the glovebox extraction fans.

11.5.3.13 Emergency 125-VDC System

The emergency 125-VDC system is composed of the following:

- Two 60-cell lead acid batteries
- Two associated battery chargers
- Two DC distribution panels.

Each battery has an ampere-hour capacity sufficient to supply its loads for one hour without the assistance of the associated charger. Each battery charger will have a nominal output of 130 VDC. The chargers have ample capacity to supply the steady-state loads under any plant condition and are able to recharge the associated battery to a fully charged condition from the design minimum charged state within 24 hours. Each charger is equipped with a DC voltmeter, ammeter, ground detector relay, and AC failure relay. Battery low voltage, low charging current, and/or battery charger failure will activate separate annunciator alarms in the utilities control rooms. The voltage of each battery is indicated in the utilities control rooms. The DC distribution panels are sized and braced for the short-circuit current available at the panel.

11.5.3.14 Normal 125-VDC System

The normal 125-VDC system is composed of the following:

- Two 60-cell lead acid batteries
- Two associated battery chargers
- Two DC distribution panels.

Each battery has an ampere-hour capacity sufficient to supply its loads for one hour without the assistance of the associated charger. Each battery charger will have a nominal output of 130 VDC. The chargers have ample capacity to supply the steady-state loads under any plant condition and are able to recharge the associated battery to a fully charged condition from the design minimum charged state within 24 hours. Each charger is equipped with a DC voltmeter, ammeter, ground detector relay, and AC failure relay. Battery low voltage, low charging current, and/or battery charger failure will activate separate annunciator alarms in the utilities control rooms. The voltage of each battery is indicated in the utilities control rooms. The DC distribution panels are sized and braced for the short-circuit current available at the panel.

11.5.3.15 120-VAC Vital Inverter System

The equipment for the 120-VAC vital inverter system consists of the following:

- Two independent and redundant inverters
- The emergency batteries and chargers

- 120-VAC Distribution panels
- 480-120 V regulating transformers.

The voltage at the 120-V vital buses will be maintained at 120 V ± 2%. The frequency will be maintained at 60 ± 0.3 Hz. The total output harmonic distortion will not exceed 5% of the fundamental. The total is the square root of the sum of the squares of each discrete harmonic present in the output, and no single harmonic will exceed 3% of the fundamental. The 120-V vital panels are free-standing distribution panels with molded-case supply breakers. The panel bus is sized and braced for the maximum available short-circuit current available at the bus. The emergency batteries have a one-hour capacity.

11.5.4 Control Concepts

Normal 4,160-V switchgear buses 1 and 2 are each supplied by separate offsite power connections via 13.8- to 4.16-kV transformers (Figure 11.5-1). In normal operation, the buses are isolated from each other. If one offsite source is lost, there is a delayed transfer that allows automatic connection of the two buses.

In the event of a loss of offsite power to a bus for greater than 0.5 second, the electrical system controls begin the transfer cycle by detecting whether voltage is available on the unaffected 4,160-V normal bus. If voltage is available, a delayed transfer is initiated to allow the voltage to decay to a safe level before connection to the unaffected bus. If, for some reason, both offsite power sources are lost or the transfer does not take place within five seconds, then the standby generators are started and connected to the normal 4,160-V buses. Various loads are then sequenced onto the generators based on the standby power configuration and requirements.

As a result of the load-shedding signals, various MCC loads may be shed if there are no standby loads supplied from the particular MCC. Otherwise, nonstandby medium- and low-voltage switchgear loads are stripped from the buses, and the contactors for the 480-V MCC loads drop out during the power interruption. The automatic sequence for standby generator loading is programmed into a PLC. The PLC continuously monitors the electrical system and provides the start signal to the generators when the start conditions are satisfied.

If power is not available from the normal or standby power system for approximately 2 minutes, the emergency bus normal supply breaker is tripped, the 4,160-V loads are stripped from the bus, and the associated emergency generator is started. The automatic sequence circuits for the emergency generator starting and loading are hard wired. The emergency loads are sequenced onto the generators in an orderly fashion. The emergency generators start on either a loss of voltage condition (less than 70% nominal) or a degraded voltage condition (less than 90% but greater than 70% nominal voltage for a sustained period of time).

11.5.5 System Interfaces

The standby and emergency electrical systems provide power to equipment throughout the MFFF. The HVAC system(s) remove heat generated by the electrical distribution equipment. The electrical system is controlled by the normal control system. Normal control system

interfaces are accomplished via qualified isolation devices. The emergency control system provides hard-wired control of the emergency control system.

11.5.6 Design Basis for Non-Principal SSCs

The applicable codes and standards for the normal and standby systems are provided in this section.

11.5.6.1 Normal AC Power System

The normal AC power system is designed using the guidance of National Fire Protection Association (NFPA) 70-1999, *National Electric Code*. The connections to offsite power are designed in accordance with Institute of Electrical and Electronic Engineers (IEEE) 765-1995, *Standard for Preferred Power Supply for Nuclear Generating Stations*, for the purpose of providing reliable power for normal operation and conditions. Grounding systems and equipment will comply with NFPA 70, IEEE 665-1995, *Guide for Generating Station Grounding* and IEEE 142-1991, *Recommended Practice for Grounding of Industrial and Commercial Power Systems*. Lightning protection complies with NFPA 780-1999, *Standard for the Installation of Lightning Protection System*. The normal AC power system equipment is designed to operate after a Uniform Building Code (UBC) earthquake.

MFFF will comply with the periodic and surveillance testing guidance presented in IEEE standards 765.

11.5.6.2 Standby AC Power System

The standby AC power system is designed in accordance with the guidance of NFPA 70-1999, *National Electric Code*, and serves loads set forth in NFPA 110, *Standard for Emergency and Standby Power Systems*, and IEEE 446-1995, *Recommended Practices for Emergency and Standby Power Systems for Industrial and Commercial Applications*. Additional standby systems are provided to support systems or equipment components whose operating continuity is determined to be vital for protection of health, life, property, and safeguards and security systems. Interior lighting systems are designed in accordance with the guidance of the Illuminating Engineering Society (IES) Lighting Handbook. Exit and emergency lighting systems comply with NFPA 101-1997, *Safety to Life from Fire in Buildings and Structures*, and NFPA 110-1996, *Emergency and Standby Power Systems*. The standby power source equipment is designed to operate after a UBC earthquake.

11.5.6.3 Normal DC Power System

The batteries are sized using the guidance of IEEE 485-1997, *IEEE Recommended Practice for Sizing Lead-Acid Batteries for Stationary Applications*. The design and installation of the normal DC system complies with the guidance of IEEE 484-1996, *Recommended Practice for Installation of Vented Lead Acid Batteries for Stationary Applications*. In addition, battery rooms shall meet the requirements identified in NFPA 110, *Standard for Emergency and Standby Power Systems*. The normal power source equipment is all designed to operate after a UBC earthquake. The insulation between the batteries and racks is acid and moisture resistant. A material that does not absorb and hold moisture is used.

11.5.7 Design Basis for Principal SSCs

This section discusses the design basis requirements applicable to the design and operation of the emergency AC and DC Power systems.

Principal SSCs are identified in Chapter 5. IROFS associated with this system will be identified in the ISA, along with the required start time for the emergency generators.

11.5.7.1 Emergency AC Power System

The emergency AC power system is designed to provide highly reliable power to redundant principal SSCs. The emergency AC power system is a fully redundant and independent system designed to provide power with credible single failures. Emergency AC power is seismically qualified and located in areas where the maximum expected variations in environmental parameters are within the normal design range of the equipment. Should any equipment be expected to operate in conditions outside of normal design ranges, the equipment will then be qualified for the expected environment. Raceways and cable trays are seismically supported and separated from redundant emergency train equipment. Cables exposed to building areas in cable trays are flame-retardant.

The fundamental design of the emergency AC power system is in accordance with IEEE 308-1991, *IEEE Standard Criteria for Class 1E Power Systems for Nuclear Generating Stations.* Components of the emergency AC power system are designated as Class 1E. Power cables associated with PSSCs are routed in conduit. Electrical independence and separation of the system are maintained using the guidance of IEEE 384-1992, *Standard Criteria for Independence of Class 1E Equipment and Circuits*, except that where circuit breakers and fuses are used as isolation devices, two will be placed in series. DCS will route PSSC power cables in conduit to minimize the likelihood of any interaction between divisional cables and between divisional and non-divisional cables. The emergency AC power system is also designed so that no single failure will prevent the system from performing its intended function in accordance with the guidance of IEEE 379-1994, *IEEE Standard Application of the Single Failure Criterion to Nuclear Power Generation Station Safety Systems.* Cables used in open cable trays are qualified for fire propagation and environmental effects using the guidance of IEEE 383-1974, *IEEE Standard for Type Test of Class 1E Electric Cables, Field Splices and Connections for Nuclear Power Generating Stations.*

The emergency generator units are designed and qualified in accordance with IEEE 387-1995, *IEEE Standard Criteria for Diesel Generator Units Applied as Standby Power Supplies for Nuclear Power Generating Stations.* A loss of offsite power test will be performed at the MOX facility on a frequency that will be determined when the complete facility test and maintenance program is developed.

The MFFF Emergency Diesel Fuel Oil Storage System (EGF) has been designed to comply with ANSI / ANS 59-51-1997 and to meet requirements of NFPA 30 (1996), "Flammable and Combustible Liquids Code" and NFPA 37 (1998), "Standards for the Installation and Use of Stationary Combustion Engines and Gas Turbines."

Emergency AC power system equipment is qualified for design basis seismic events and normal, off-normal, and design basis accident environmental conditions. The basis of seismic qualification is analysis or test in accordance with IEEE 344-1987, *IEEE Recommended Practices for Seismic Qualification of Class 1E Equipment for Nuclear Generating Stations.* Environmental qualification complies with IEEE 323-1983, *IEEE Standard for Qualifying Class 1E Equipment for Nuclear Power Generating Stations.* Mechanical equipment seismic qualification considers attached piping loads, thermal loads and live loads such as fluid sloshing, and in addition, applied loads meet or exceed accelerations corresponding to their installed location.

The protection for the emergency electrical system is designed in compliance with IEEE 741-1997, *IEEE Standard Criteria for the Protection of Class 1E Power Systems and Equipment in Nuclear Power Generating Stations.* Circuit breakers will be tested periodically to ensure that they trip within a specified tolerance of the manufacturer's published time-current trip curves for the models involved. Details of the maintenance and test program will be developed at a later date prior to operation.

Upon the loss of standby power, the emergency AC power system provides power to principal SSC loads. Each independent train of emergency components is capable of performing all necessary safety functions. The emergency AC power system is composed of the following:

- Emergency generators
- 4,160-V emergency buses
- 480-V emergency system
- 480-V UPS
- 120-V vital AC power system
- Associated switchgear and MCCs.

The emergency generator units are connected to an associated 4,160-V switchgear bus and are capable of being stopped or started locally or from the emergency control room. Each generator is sized to have sufficient capacity to start and accelerate associated principal SSC loads. A redundant electric starting system with redundant batteries is supplied for each generator, sized to allow for five cranking cycles. A fuel oil day tank is provided for each generator to allow for storage of eight hours, up to a maximum of 660 gallons, of fuel oil. The independent fuel oil supply tanks provide sufficient storage capacity to allow each emergency generator to operate continuously for seven days.

Each emergency AC power system bus, whether 4,160 V or 480 V, is independent of the corresponding bus on the opposite train. Each bus is rated and braced for the maximum short-circuit current available at the bus.

A dedicated 480-V UPS is provided for each of four VHD fans. Each UPS consists of a rectifier and inverter and a battery bank capable of supplying power to the VHD fans for one hour upon loss of AC power.

The 120-V vital AC power system supplies power to principal SSC I&C loads. The system consists of two independent and redundant power sources, train A and train B, each with

sufficient capacity to supply its own vital bus loads. Each vital bus is supplied from a UPS with a one-hour battery backup capacity.

UPS design and procurement complies with the guidance of IEEE 944-1986, *IEEE recommended Practice for the Application and Testing of Uninterruptible Power Supplies for Power Generating Stations.*

MFFF will comply with the periodic and surveillance testing guidance presented in IEEE standards 308, 387, and 338 (as clarified in Regulatory Guide 1.118).

11.5.7.2 Emergency DC Power System

The emergency batteries are sized using the guidance of IEEE 485-1997, *IEEE Recommended Practice for Sizing Lead-Acid Batteries for Stationary Applications.* The design and installation of the emergency batteries complies with the guidance of IEEE 484-1996, *Recommended Practice for Installation Design and Installation of Vented Lead-Acid Batteries for Stationary Applications.* The insulation between the batteries and racks is acid and moisture resistant. A material that does not absorb and hold moisture is used. In addition, battery rooms shall meet the requirements identified in NFPA 110, *Standard for Emergency and Standby Power Systems.*

The emergency DC power system is designed using the guidance of IEEE 308-1991, *IEEE Standard Criteria for Class 1E Power Systems for Nuclear Generating Stations.* Electrical independence and separation of the system are maintained using the guidance of IEEE 384-1992, *Standard Criteria for Independence of Class 1E Equipment and Circuits*, except that where circuit breakers and fuses are used as isolation devices, two will be placed in series. The emergency DC power system is also designed so that no single failure will prevent the system from performing its intended function in accordance with the guidance of IEEE 379-1994, *IEEE Standard Application of the Single Failure Criterion to Nuclear Power Generating Station Safety Systems.*

Emergency DC power system equipment is qualified for design basis seismic events and all normal, off-normal, and design basis accident environmental conditions. The basis of seismic qualification is analysis or test in accordance with IEEE 344-1987, *IEEE Recommended Practices for Seismic Qualification of Class 1E Equipment for Nuclear Generating Stations.* Environmental qualification complies with IEEE 323-1983, *IEEE Standard for Qualifying Class 1E Equipment for Nuclear Power Generating Stations.* Cables used are qualified using the guidance of IEEE 383-1974, *IEEE Standard for Type Test of Class 1E Electric Cables, Field Splices and Connections for Nuclear Power Generating Stations.* The emergency DC system complies with the design and application guidance provided in IEEE 946-1992, *"IEEE recommended Practice for the Design of Safety-Related DC Auxiliary Power Systems for Nuclear Power Plants".*

The emergency DC power system is composed of the following:

- Two 60-cell lead acid batteries
- Two associated battery chargers
- Two DC distribution panels.

Each battery has an ampere-hour capacity sufficient to supply its loads for one hour without the assistance of the associated charger. The chargers have ample capacity to supply the steady-state loads under any plant condition and are able to recharge the associated battery to a fully charged condition from the design minimum charged state within 24 hours. Each train of DC power is redundant and independent.

MFFF will comply with the periodic and surveillance testing guidance presented in IEEE standards 308, 450 and 338 (as clarified in Regulatory Guide 1.118).

This page intentionally left blank.

Figures

This page intentionally left blank.

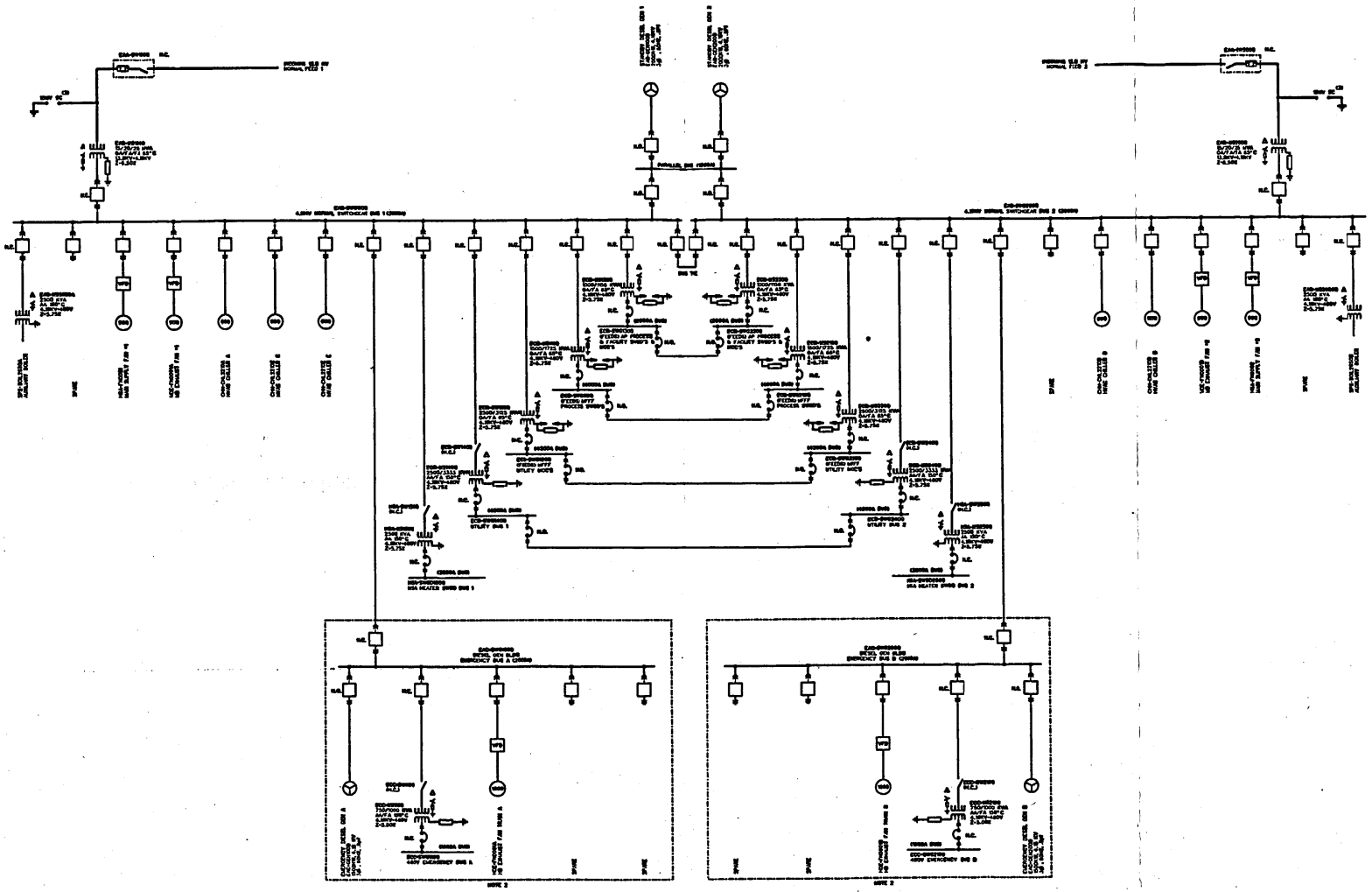

Figure 11.5-1. Simplified Diagram of AC Power Supply

This page intentionally left blank.

11.6 INSTRUMENTATION AND CONTROL SYSTEMS

This section provides a general description of the MFFF instrumentation and control (I&C) systems and the associated control rooms.

11.6.1 Function

The function of the I&C systems is to monitor and control the manufacturing process systems, the plant utility systems, and the plant safety and emergency systems. The I&C systems monitor and control plant parameters during normal and transient conditions to ensure that limits are not exceeded and to ensure the required quality of the product. They also provide signals to control equipment to prevent the occurrence of faulted conditions and to mitigate the consequences of a faulted condition. The types of parameters that are monitored and/or controlled include the following:

MOX Processing (MP) and Aqueous Polishing (AP) Process and Utilities

- Position or displacement of equipment (e.g., elevators, stackers, cartracks, grinding machines, sabots, positioners, doors, dampers, valves, machine tool parts)
- Mass of product materials (e.g., PuO_2, UO_2)
- Acceleration of motors and loads
- Current and voltage of electrical equipment (e.g., electrolyzer and motors)
- Optical recognition (e.g., of bar codes and perforation codes)
- Temperature of equipment, process fluids, ventilation systems, processing systems, and heating and cooling fluids
- Flow of process gases, fluids, and ventilation systems
- Pressure and differential pressure of process fluids, gases, and ventilation systems
- Physical dimensions of manufactured parts and assemblies
- Radiation
- Machinery vibration
- Density, pH, conductivity, and concentration of process solutions
- Hydrogen concentration in processing areas
- Levels in tanks and fluid collection systems (e.g., process solution tanks, fuel oil storage)
- Frequency (e.g., inverters, generators)

11.6.2 Description

The MFFF I&C systems are highly automated and include the following systems:

- MP and AP process control systems

- Utility control system
- Emergency control system.

The MFFF I&C systems are controlled from various control rooms. Each control room is dedicated to a particular functional unit or a group of similar functional units. For example, the MP pellet operations are controlled and monitored from a single control room that is dedicated to the powder and pellet operations (e.g., grinding, sorting, and sintering). The plutonium transfer operations between the AP and MP Areas are controlled and monitored from another dedicated control room.

11.6.2.1 MP and AP Process Control Systems

The AP and MP process control systems are composed of the following control subsystems:

- Normal control subsystem
- Protective control subsystem
- Safety control subsystem.

The normal control subsystem controls the MFFF normal manufacturing and processing operations. The normal control subsystems perform monitoring and control functions commonly associated with plant automation and supervisory control systems, including equipment and process shutdown to safe failure modes upon detection of abnormal operating states. The normal control systems are not relied on to maintain compliance with any of the 10 CFR §70.61 performance requirements.

The protective control subsystem performs monitoring and control functions necessary to protect personnel health and minimize danger to life and property. The protective control subsystem operates independently of the normal control system. Actions associated with protective control functions have precedence over and override normal control actions. The protective control subsystems are not relied on to maintain compliance with any of the 10 CFR §70.61 performance requirements.

The safety control subsystems are principal SSCs and perform monitoring and control functions deemed necessary to meet the applicable 10 CFR §70.61 performance requirements. The safety control subsystem operates independently of the normal control system. Actions associated with safety control functions have precedence over and override normal and protective control actions. The safety control functions of the principal SSCs associated with the I&C systems are discussed in Chapter 5. The principal SSCs for I&C systems are the safety control subsystems of the MP and AP process control systems and the emergency control system. Safety control subsystems are designed to meet the requirements as shown in Section 11.6.7.

11.6.2.2 Utility Control Systems

The utility control systems are composed of the following control subsystems:

- Normal control subsystem
- Protective control subsystem

- Auxiliary control subsystem.

The utility control systems are designed to ensure that the facility support systems operate in accordance with specified parameters. The normal control subsystem controls the normal operation of the facility support systems. The protective control subsystem provides protection for personnel and equipment. The auxiliary control subsystem ensures that the facility support systems continue to operate within normal control limits during transients in the normal control subsystem. The auxiliary control subsystem is separate and independent of the normal and protective control subsystems. The utility control systems are not relied on to maintain compliance with any of the 10 CFR §70.61 performance requirements.

11.6.2.3 Emergency Control System

The emergency control system is a principal SSC. The emergency control system controls the facility support systems under emergency conditions and has a limited number of safety functions associated with automatic and manual controls over electrical power distribution and supply systems, ventilation systems, and seismic isolation systems that are relied on for safety upon failure of the normal and auxiliary control subsystems. The emergency control system helps ensure that particular facility support systems will operate as needed to mitigate the consequences of such incidents.

11.6.2.4 Data Communication Networks

A system of data communication highways allows the various components of the control system to communicate with each other.

The normal controllers of the AP and MP systems are attached to several data communication networks. The normal controllers are linked to one another and to their respective workstations by way of the Immediate Control Network (ICN). The normal controllers are also linked to the manufacturing management and information system and the computer-aided diagnosis system by way of the local industrial network (LIN). The normal controllers are connected to the various sensors and instruments using Fieldbus technology and traditional hard-wired methods. The workstations are also linked to the manufacturing management and information system and the manufacturing status system by way of the X-terminal network (XTN).

The utility systems are connected to two redundant data highways: Utility Network A (UNA) and Utility Network B (UNB). These data highways connect the workstations to the controllers.

The sensors and instruments are connected to the controllers, and the control signals from the controllers are connected to the motor control centers (MCCs) using either Fieldbus technology or traditional hard-wired methods.

11.6.2.5 Control Rooms

The operation of each AP functional unit, MP functional unit, or utility system is supervised from a workstation in a control room. The operators at the workstations monitor the operation of

the functional unit or utility system and supervise the operation of the automatic controls. The MFFF includes the following control rooms:

- Polishing Control Room (or AP systems control room), which also includes control functions for the normal utility, auxiliary, fire, and health physics functions
- MP Control Rooms
  - Waste Control Room
  - Cladding Control Room
  - Powder and Pellet Control Room
  - Receiving Control Room
  - Rod Area Control Room
  - Assembly Area Control Room
- Utilities Control Room
- Reagents Processing Building Control Room
- Emergency Control Rooms for Train A and Train B.

The AP and MP control rooms provide central locations from which the operations staff can monitor, supervise, and control the operation of the manufacturing or processing functions. From these control rooms, the operations staff will have (1) access to the production control information needed to verify that the automation is performing as required, and (2) notification if there is a problem with the automation, manufacturing, or processing. The operators will have access to video displays from which they may observe the actual conditions in the functional unit. These control rooms have no operational requirement if the associated AP or MP functional unit is not operating.

11.6.2.5.1 Polishing Control Room

The Polishing (or AP systems) Control Room, located in the Shipping and Receiving Building (BSR), provides space for several different control areas: the AP systems, the normal utilities systems, the auxiliary utilities systems, the fire detection systems, and the health physics systems. The AP processing areas are not normally occupied; therefore, the AP systems are controlled from this control room.

11.6.2.5.2 MP Control Rooms

The control rooms for the MP functions are the waste control room, cladding control room, powder and pellet control room, receiving control room, rod area control room, and assembly area control room.

11.6.2.5.3 Utilities Control Room

MFFF utility systems are controlled from the Polishing Control Room (discussed above). A fully functional, redundant control room is also provided so that the MFFF support functions can be monitored and controlled. Both locations provide a central location from which the operations staff can monitor and supervise the operation of the MFFF utility and support functions and the manufacturing or processing support functions. The MFFF functions that are controlled and monitored from these control rooms are the HVAC systems, the electrical distribution system, and the various MFFF and process support systems (e.g., steam system, hot and chilled water systems, plant and instrument air system, reagent gas systems). The processing support functions include the preparation of reagent chemicals

11.6.2.5.4 Reagent Processing Building Control Room

A control room is provided in the Reagent Processing Building, from which the operations staff can monitor the operation of reagent processing operations.

11.6.2.5.5 Emergency Control Rooms

Two separate emergency control rooms are provided in the Shipping and Receiving Building: the Emergency Train A control room and the Emergency Train B control room. Each emergency control room is provided with its own ventilation system. The control devices in the emergency control rooms are traditional nonprogrammable solid-state or electromechanical devices. The controls in the emergency control room have priority over the normal, auxiliary, and protective control subsystems. With respect to the AP and MP systems, the only function of the emergency control system is to shut off all power to the process units thus bringing the processes to a stop.

11.6.2.5.6 Control Room Concepts

The control rooms are not occupied if they are not needed (i.e., if no operations are ongoing in the functional unit for which they are controlling). The Aqueous Polishing (AP) Control Room in the Shipping and Receiving Area has the largest number of oversight functions. The Utilities Control Room is available on an "as-needed" basis if the utilities systems controls in the Polishing Control Room become unavailable. The control rooms for the MP functions are not occupied when the operations being conducted from there are terminated. The Reagents Processing Building control room is not normally occupied. The AP Control Room is the only control room that is always manned. For that reason, the utilities, fire detection and health physics monitoring is located in that control room. The intent of the statement in the CAR is to indicate for example that when a receiving operation is not taking place; no one is in the receiving control room, or if no waste operations are taking place no one is in the waste control room. Fire detection, health physics monitoring, and utilities monitoring are continuous, and the systems are in continuous operation unless down for maintenance or testing. The last "normal" control room to be unoccupied (i.e., in the event of an emergency) would be the AP Control Room.

Each of the control rooms is equipped with workstations and access to the control system data communication networks. Monitoring functions and selected manual control functions are also provided in the control rooms. The monitoring functions include video (television) monitoring

of the activities in the functional unit. The manual control capability is typically an emergency stop command switch that is hard wired from the control station in the control room to the MCC.

The control rooms for the MP functional units are located generally near the functional units. These control rooms are all located in the MP Area.

The utility functions of the MFFF include the functions necessary to directly support the MP and AP functions. These support functions include reagent fluid makeup, process cooling, gas supply, and liquid waste management. The MFFF utility functions also include control of the HVAC systems and power dispatching.

Control rooms are fitted with the control and monitoring equipment required to operate the specific functional unit. The control rooms are designed to accommodate the needs of the operators. Environmental controls are provided where necessary and as required by the mission of the control room. Human factors engineering principles are applied to the design of the control rooms, and lessons learned are also applied to the design of the control rooms and the assignment of functions to the control rooms (see Chapter 12).

11.6.3 Major Components

There are no physical structures associated with the control system other than panels, cabinets, and racks. The main components of the control system are sensors and actuators, controllers, workstations, servers, computers, and networks. In addition, each control room will have data recording and display systems (printers and video display terminals), manual control panels (hardwired control panels), video (closed-circuit television) display terminals and video display screens, supervisor key-lock stations as required, and communication devices (e.g., telephones, public address system).

11.6.3.1 Sensors

Each of the AP and MP functional units is equipped with sensors and instruments that monitor and measure the various conditions of interest to the manufacturing and processing operations. Instruments include devices to measure conditions in the functional unit or the conditions of the product that is being manufactured or processed (e.g., temperature, mass, physical dimensions, component identification bar codes, process flow rates, and pressure). Other sensors monitor conditions and the states of devices in the unit (e.g., machine tool positions, location of product or product containers, and valve position). The sensors and instruments provide information to the automatic controllers, which in turn control the actuators and devices that perform the manufacturing and processing steps.

Each of the utility systems is also equipped with sensors and instruments that monitor and measure the various conditions of interest for the operation of the MFFF. Instruments include devices to measure or monitor the electrical power system performance, HVAC performance, and the various auxiliary fluid and gas systems that support the MP and AP systems. The sensors and instruments provide information to the automatic controllers, which in turn send signals to the actuators that control the various utility systems.

11.6.3.2 Actuators

The actuators in the AP and MP functional units are the devices that physically perform the operations needed to manufacturer or process the products (e.g., manipulators, valve actuators, blowers, pumps, mills, heaters, and conveyers).

The actuators in the utility systems are the devices that physically perform the operations needed to control the MFFF (e.g., valve actuators, fans, damper actuators, pumps, and heaters).

11.6.3.3 Controllers

Each AP and MP functional unit is provided with a complement of controllers that interface with the instruments and sensors in the unit. The controllers generally operate independently of the controllers in the other functional units. Each utility system is also provided with a complement of controllers that interface with the instruments and sensors in the utility system. Controllers are described in the context of the subsystem (i.e., normal, protective, auxiliary and safety subsystems of the AP and MP Process Control Systems and the Emergency Control System).

11.6.3.3.1 Normal Controllers

The normal controllers are programmable logic controllers that control the normal operations of a functional unit. The normal controllers used to control the facility support systems are known as utility controllers. They are physically located in rooms established for this purpose near the concerned functional unit. The normal controllers are equipped with communication devices and are connected to the control system networks. Data are communicated between the controllers and the distributed input/output (I/O) system, the normal controllers for other functional units, the protective controllers, the safety controllers, the workstations, the manufacturing management and information system, and the computer-aided diagnosis system.

When production activities require coordination between functional units, the normal controllers communicate data between themselves and between the manufacturing management and information system as needed to coordinate the activities between functional units.

11.6.3.3.2 Protective Controllers

The protective controllers (e.g., personnel equipment protection (PEP) controllers) are dedicated controllers that serve to protect operations personnel from injury or the functional unit itself from being damaged by an inappropriate operation of an actuator. These are autonomous controllers that serve a very specific and limited function and are not connected to the control system networks. These controllers may be programmable logic controllers or may be built up from traditional electromechanical relays. The controllers are physically located in or near the MCC that serves the functional unit. The protective sensors are hard-wired to the protective controller, and the control signals are hard wired to the control circuits of the MCC or power panel. The protective controllers operate directly on the MCC and have priority over the command signals of the normal controllers. The protective controllers communicate performance data to the normal controllers, which in turn relay the data to the workstations by way of the ICN. The human operators have no direct access to the protective controllers and cannot routinely intervene in the operation of the protective controllers.

11.6.3.3.3 Safety Controllers

Particular AP and MP functional units are equipped with safety controllers. The safety controllers in the AP and MP process safety control subsystems are relied on to prevent or mitigate accidents that could result in consequences exceeding the 10 CFR §70.61 performance requirements. These controllers transmit data to the normal controllers over isolated I/O data channels but they are not connected to the normal control system networks (i.e., XTN, LIN and ICN).

The AP and MP safety controllers may be programmable logic controllers or may be built up from traditional electromechanical relays. Safety controllers will be provided alone or in a redundant configuration depending on the safety functions required to meet double contingency and single failure criteria. One of the safety controllers is physically located in a room separate from the other safety controller whenever redundant safety controllers are required. When loss of the safety function is followed by placing the process in a safe condition, separation is not required. The safety sensors are hard wired to the safety controllers, and the control signals of the safety controllers are hard wired to the actuator control circuits in the MCC or power distribution panel. The safety controllers operate directly on the MCC and have priority over the command signals of the normal and protective controllers. If a safety controller does not detect the appropriate conditions in the functional unit, it will not generate the signals required to validate the commands issued by the normal controller. Operations within the functional unit are halted and cannot continue until the appropriate conditions are established. The human operators have no direct access to the safety controllers and cannot routinely intervene in the operation of the safety controllers; except for the scrap jar isotopic concentration data which is manually loaded into the safety controllers in accordance with enhanced administrative controls.

11.6.3.3.4 Fire Controllers

The MFFF fire detection system is provided with its own control system. The MP and AP fire controllers monitor signals from the MFFF fire detection system. Upon receipt of a fire condition signal, the MP fire controllers will direct the normal controllers to close the fire doors. If, after a predetermined time, the MP fire controllers determine that normal controllers have not completed the appropriate steps, then the MP fire controller will disable the normal controller, and close the fire doors. Fire alarms are generated by the MP and AP fire controllers. The MP and AP fire controllers communicate performance data to the normal controllers, which in turn relay the data to the workstations by way of the ICN.

11.6.3.3.5 Auxiliary Controllers

Selected utility systems are also equipped with auxiliary controllers. The auxiliary controllers in the utility systems provide an alternate monitoring and control capability in the event that the normal control systems become compromised, disabled, or otherwise unavailable. The utility auxiliary controllers are installed in locations separate from the normal controllers. The auxiliary controllers are directly hardwired to dedicated workstations that are located in the AP systems control room. These are autonomous controllers and are not connected to the control system networks.

11.6.3.3.6 Emergency Controls

The emergency controls are built up from traditional electromechanical relays and control switches. The sensors for the emergency controllers are hard wired into the control system, and the control signals are hard wired into the MCCs. The emergency control panels are located in the emergency control rooms. The emergency control system allows the operators to take direct manual control of selected systems.

11.6.3.4 Workstations

The workstations are located in the control rooms and are connected to the various data communication networks. The human operators use the workstations to monitor the operation of the functional units and utility systems and to execute the supervisory and executive control of the programmable logic controllers that operate and control the actuators in the functional units. The workstations are built up from industrial microcomputers (personal computers).

11.6.3.5 Networks

The data communication networks are proprietary or Ethernet technology. The I/O system that connects the sensors in the functional units to the normal controllers and connects the control signals to the MCCs and power distribution panels is Fieldbus technology.

11.6.3.6 Manufacturing Management and Information System

The Manufacturing Management and Information System (MMIS) serves several functions. This realtime system continuously tracks and maintains the product inventory database as the product moves through the manufacturing and processing systems. The system tracks the quantities of product that are allowed to be in any area at a given time. The functional unit controllers cannot move product into or out of a functional unit without authorization of the MMIS. The system continuously collects data about the progress of the manufacturing and processing systems and periodically updates the manufacturing status system database files. It is also a server to the terminals connected to the X-terminal network.

11.6.3.7 Manufacturing Status System

The manufacturing status system is identical to the MMIS. A realtime copy of the MMIS database is maintained in the manufacturing status system. The manufacturing status system is used to sort and analyze the data collected by the MMIS and to generate detailed reports.

11.6.3.8 Computer-Aided Diagnosis System

The computer-aided diagnosis system monitors the performance of both the AP and MP normal process control system. It is independent of the controllers and has its own software. The computer-aided diagnosis system allows the operators to perform a primary diagnostic when a production unit breaks down. The computer-aided diagnosis system assists the programmable logic controller software to determine the process conditions that have not been met. This system monitors the operation of the normal controllers and the ICN.

11.6.3.9 Process Computers

Some of the instrument devices in the functional units are complex measurement systems and require a dedicated control or data handling system. An example of such a system is the laser optical micrometer. These instrument systems are equipped with a dedicated microprocessor-based computer system that operates the instrument, conditions the instrument's data signals, and transmits the data signals to the programmable logic controller that is controlling the operations in the functional unit.

11.6.4 Control Concepts

11.6.4.1 General Background

The MFFF uses an automated control system strategy. Manufacturing or process operations are translated into appropriate control algorithms for each step. These control algorithms are then implemented in the control machinery. The control machinery for the MFFF is built around programmable logic controllers, which in turn are built around software-controlled microprocessors.

Operations are carried out in accordance with the planned steps and procedures that have been programmed into the automatic controllers. The results of each step or the conditions following the completion of each procedure are monitored and measured. The results are compared with established criteria, and if the measured values are beyond the acceptable limits for the condition of interest, the human operators are notified and the automatic controls take steps to put the process in a planned state that is appropriate for the identified condition. This control technique provides a consistent product with reduced variability. It provides the earliest identification and notification of product that is not within specification and prevents any substandard product from being used in the next process.

The same control technique is applied to the control of the functional unit support systems and for control of the facility support systems. This technique reduces the chances that the facility systems will be operated other than in accordance with established methods and criteria and reduces the likelihood of an incident or upset condition.

The architecture of the control system is predicated on the concept of distributed processing systems. Except for the cases where two or more functional units need to be coordinated to perform an operation, the programming of the controllers allows the operations within the functional units to be conducted generally independently of the operations within the other functional units and of the main control rooms. The control rooms provide executive control and monitoring and supply specific product manufacturing requirements to the controllers. The control rooms can start and stop a process but cannot normally alter the normal operation of the process. The controllers report to the control rooms the information needed to monitor the progress of the process or other information as requested by the control room.

In this concept of distributing the control algorithms, only the control algorithms necessary for specific functional units are programmed into the controllers that are dedicated to the specific functional units. Should a controller fail, only the affected functional unit is compromised. This

method of distributing the control algorithms reduces the potential impact to the overall process of a failure in any single controller.

The controllers are physically distributed to locations near the functional units. This method of physically distributing the controllers reduces the risk to the control system by reducing the length of control and signal cables that are required. This limits the potential exposure of the control cables to damage, which reduces the risk to the process.

Figure 11.6-1 illustrates the essential elements of the control system for a single functional unit; this architecture is typical for the control of all of the functional units. Figure 11.6-2 illustrates the configuration of a safety controller.

11.6.4.2 Specific Concepts

The process normal controllers act directly on the various manufacturing and processing actuators. The normal controllers are linked to each other and the various control rooms by the data highways as described above (Figure 11.6-3). The controllers pass information to the workstations, data systems, and display systems in the control rooms where the human operators monitor the status of the functional units and the progress of the manufacturing or processing units. The operators in the control rooms provide the executive and supervisory control necessary to initiate a process, stop a process, supervise the progress of a process, monitor the status of a process, and execute manual intervention in any process control should the need arise. The controllers pass information between themselves as needed to coordinate the movement of material between functional units.

The AP and MP system protective controllers act directly on the various manufacturing and processing actuators and are capable of overriding the instructions of the normal controllers. The protective controllers are connected directly to the control circuits of the MCCs or power distribution panels with conventional hard-wired technology. The protective controllers pass data to the normal controllers, which in turn pass the data to the display and monitoring systems in the control rooms. The workstations in the control rooms do not have command access to the protective controllers and cannot routinely interfere with the actions of the protective controllers.

The process system safety controllers are programmed to intervene in the operation of the functional unit if the safety controller detects disallowed conditions. The safety controllers act directly on the MCC controlling the various manufacturing and processing actuators. The safety controllers will block the instructions of the normal controllers. The safety controllers pass commands directly to the MCCs to block the command of the normal PLC utilizing conventional hard-wired technology. The safety controllers pass data to the normal controllers, which in turn pass the data to the display and monitoring systems in the control rooms. The workstations in the control rooms do not have command access to the safety controllers. The human operators have no direct access to the safety controllers and cannot routinely intervene in the operation of the safety controllers; except for the scrap jar isotopic concentration data which is manually loaded into the safety controllers in accordance with enhanced administrative controls.

The utility system normal controllers are programmed to execute the steps necessary to control the utility unit. The controllers are linked to each other and the various control rooms by two

data highways: Utility Network A and Utility Network B. The controllers pass information to the display systems in the utility control rooms where the human operators monitor the status of the utility units. The operators in the control rooms provide the executive and supervisory control necessary to initiate a support process, supervise and monitor the status of the utility systems, and execute manual intervention in any utility should the need arise.

The auxiliary controllers provide alternate monitoring and control capability in the event that the utility normal control systems become compromised, disabled, or otherwise unavailable. The auxiliary controllers are installed in locations separate from the normal controllers. The auxiliary controllers are directly hardwired to dedicated workstations that are located in the utilities security remote control room.

The emergency control system is a mostly manual control system that is designed to continue to function during and following certain design basis events. The system ensures that particular facility systems will continue to operate as needed to mitigate the consequences of such an incident. The system is built from traditional nonprogrammable solid-state devices, electromechanical relays, display devices, and manually operated switches. The control system is hard wired between the sensors, control panels, and actuators. Software control is not utilized. The emergency control system is divided into two separate and independent trains, which are known as Train A and Train B. The two trains are completely separate from one another and are provided with two separate protected environment emergency control rooms. Operator actions required to monitor the status of the incident or to override automatic control functions can be accomplished for each train from within that train's emergency control room.

The MMIS tracks the movement of material through the processing and manufacturing functional units and provides a continual accounting of material quantities and locations. When normal controllers attempt to transfer material between functional units, the normal controllers for both the sending and receiving functional units must request and receive permission from the MMIS.

11.6.5 System Interfaces

The control system is primarily an electronic system that interfaces with mechanical, electrical, and process systems in the MFFF. The system provides signals that control electromechanical and pneumatic actuators. The system also provides data signals to information display, processing, and storage systems.

Electromechanical actuators are electrically powered through MCCs or power distribution panels. For example, the actuator shown in Figure 11.6-1 could be a motor that is powered from an MCC. Pneumatic actuators are powered by the instrument air system or the plant air system. In this case, the control system provides an electrical control signal to a device, which converts the electrical signal to a pneumatic signal (e.g., a control signal that is sent to a solenoid valve, which in turn opens or closes to provide motive air to open or close a valve).

The control rooms provide operators with a human-system interface for all systems throughout the MFFF.

11.6.6 Design Basis for Non-Principal SSCs

The design of the MFFF control system is derived from the control systems developed for COGEMA's MELOX facility, which is a highly automated manufacturing and processing control system.

The design of the MFFF digital control system is as similar as practical to the proven design currently employed at MELOX. Departures from the proven MELOX design are typically made to satisfy U.S. industrial and regulatory requirements or as a result of lessons learned in the MELOX or La Hague facilities, MFFF building layout changes, equipment or material changes, or important developments in the process or controls technology.

The principal design goal of the manufacturing and processing normal control system is to control the manufacturing and processing systems to the parameters specified by the production orders. The principal design goal of the normal utility control system is to control the facility systems to parameters within the operational limits of the facility.

The following design bases are applicable over the full life cycle of I&C systems and devices.

Electronic control systems are designed to reduce electromagnetic and radio frequency interference by using the methods and practices identified in IEEE 518-1982, *IEEE Guide for the Installation of Electrical Equipment to Minimize Electrical Noise Inputs to Controllers from External Sources*, and IEEE 1050-1996, *Guide for Instrumentation and Control Equipment Grounding in Generating Stations.*

Data communications networks are designed to the specifications of the ANSI/IEEE 802.3 series of standards, *IEEE Standards for Local Area Networks: Carrier Sense Multiple Access with Collision Detection (CSMA/CD) Access Method and Physical Layer Specifications*, commonly called Ethernet. The Ethernet technology (IEEE 802.3) systems do not include the data communications links between the sensors and the controllers (PLCs). That data link is hard-wired (individually or by Fieldbus technology depending on the application of the sensor and controller).

Normal controllers are programmed using the Grafcet sequential function chart language defined in accordance with IEC 848-1988 *IEC Standard for Preparation of Function Charts for Control Systems*. IEC 848-1988 is the basis document for the IEC 61131-3-1993 *International Standard for Programmable Controllers* sequential function chart (SFC) language section and for legacy code that may not be fully compliant with the later standard. The application software development and evaluation process considers the recommendations and guidelines from NUREG/CR-6090-1993 *The Programmable Logic Controller and Its Application in Nuclear Reactor Systems* and NUREG/CR-6463-1996 *Review Guidelines for Software Languages for Use in Nuclear Power Plant Safety Systems: Final Report.*

11.6.7 Design Basis for Principal SSCs

The safety and emergency control systems are adapted from the existing MELOX designs. The safety control subsystems and emergency control system are designed to ensure that safety limits are not exceeded and that undesired operational conditions or events are prevented or mitigated.

The fundamental design criteria for principal SSCs are as follows. The design provides for inclusion of I&C systems to monitor and control the behavior of principal SSCs. The facility and system design and facility layout is based on defense-in-depth practices. The design incorporates, to the extent practicable, (1) preference for the selection of engineered controls over administrative controls to increase overall system reliability; and (2) features that enhance safety by reducing challenges to principal SSCs. The I&C systems for principal SSCs include redundant and/or diverse instrument channel with coincident logic providing automatic actuation with additional manual operation capability as necessary. The instrument channels and associated logic are designed with the following:

- Provisions so that I&C system components can be tested periodically for operability and required functional performance
- Electrical, physical, and control/protection separation to ensure that any required redundancy and independence are maintained
- No credible single failure vulnerability
- Instrument spans, setpoints, and control ranges to ensure proper monitoring and control of principal SSCs
- Provisions so that I&C system components fail in a safe failure mode
- Status monitoring of the behavior of the systems and components that are identified as principal SSCs, as required
- System capability to maintain functionality when subjected to natural phenomena hazards listed in Table 5.5-6.

Few industry consensus standards are available for the development of electrical and I&C systems designs used in a MOX fuel fabrication facility. Where possible, standards that were written to provide criteria and requirements for safety systems in commercial nuclear power generating stations were adopted to provide a proven and accepted means for the design of safety systems. In some cases, the actual requirements from the adopted standard apply only to nuclear power generating stations; however, the methods and practices from that standard may be applied for a MOX fuel fabrication facility. For example, IEEE 603-1998 identifies reactor trip systems as a key operational element of a safety system; the MFFF clearly does not have a reactor trip system. Nonetheless, the methods and practices of the standard are applicable and these will be complied with as shown. The following codes and standards, as applicable to fuel cycle facilities, are used in the installation, design and maintenance of I&C principal SSCs.

The safety control subsystems and emergency control system are designed using the methods and practices identified in IEEE 379-1994, *Standard Application of the Single-Failure Criterion to Nuclear Power Generating Safety Systems*, including the considerations contained in Branch Technical Position (BTP) HICB-17, and IEEE 603-1998, *IEEE Standard Criteria for Safety Systems for Nuclear Power Generating Stations*. The 1998 version of this standard has been selected because it complies with the requirements of Regulatory Guide 1.153, Revision 1. The 1998 version of the standard addresses safety systems using digital computers and addresses electromagnetic interference in the design basis requirements; however, specific compliance with electromagnetic interference criterion shall be in accordance with Regulatory Guide 1.180.

Software programmable electronic systems used in safety control subsystems are designed using the methods and practices identified in IEEE 7-4.3.2-1993, *IEEE Standard Criteria for Digital Computers in Safety Systems of Nuclear Power Generating Stations.* The term "safety system" may or may not include the use of digital computers. Systems that do not require digital computers in order to accomplish their safety function comply with IEEE 603-1998. The standard IEEE 7-4.3.2-1993 provides additional requirements not specifically addressed in IEEE 603-1998 for digital computers used in safety systems. In this context, the term "digital computer" applies to any software programmable electronic system credited for performing a safety function such as a programmable logic controller (PLC), work station, file-server, computer or any other device that relies on user supplied parameters or program instructions to properly function (e.g., programmable MCC or single-loop controller with programmable alarm and control points). Independence of software communication between nonIROFS computers and computer systems relied on for safety follows the methods identified in IEEE 7-4.3.2-1993, Annex G.

Application software for digital computers used in safety systems is developed, reviewed, and verified using the methods and practices identified in IEEE 1012-1998, *IEEE Standard for the Software Verification and Validation*, including Positions 1 through 8 and 11 of Regulatory Guide 1.168; IEEE 1028-1997, *IEEE Standard for Software Reviews*, [IEEE 1028-1997 is an update of IEEE 1028-1988, which the NRC endorsed in Regulatory Guide 1.168. The revisions to IEEE 1028-1997 have been reviewed and have been found to be compliant with the exceptions listed below in Regulatory Positions 9 through 11 of Regulatory Guide 1.168. Notably, IEEE 1028-1997, unlike the 1988 version, clarified the mandatory actions which indicate conformance with the standard (Position 9); expands on Table 1 from 1988 from listing some principal processes for achieving quality objectives to breaking down the five types of reviews in the salient quality characteristics (Position 10); and clarifies the relationship with other codes and standards (Position 11). Where IEEE 1028 is referenced as being applicable for conducting a software review, IEEE 1028-1997 is used because it clearly describes how to conduct standardized software reviews and audits.]; IEEE 830-1998, *IEEE Standard Recommended Practice for Software Requirements Specifications,* including the NRC's exceptions to the standard IEEE 830-1998 listed in Section C of Regulatory Guide 1.172 in the implementation of this standard; and IEEE 1074-1997, *IEEE Standard for Developing Software Life Cycle Processes*, including Provisions 1 through 6 of Regulatory Guide 1.152. A hardware compliant ladder logic programming language is used where PLCs are used as safety controllers. Software used in safety controllers are analyzed in accordance with software safety plans prepared in accordance with IEEE 1228-1994 *IEEE Standard for Software Safety Plans.* The application and safety software development and evaluation process considers the recommendations and guidelines from NUREG/CR-6090-1993 *The Programmable Logic Controller and Its Application in Nuclear Reactor Systems* and NUREG/CR-6463-1996 *Review Guidelines for Software Languages for Use in Nuclear Power Plant Safety Systems: Final Report.*

The configuration control of application software for digital computers used in safety systems is managed using the methods and practices identified in IEEE 828-1998, *IEEE Standard for Software Configuration Management Plans*, supplemented by IEEE 1042-1987 *IEEE Guide to Software Configuration Management*, and as identified in Regulatory Guide 1.169. Software quality is assured by a software quality assurance plan prepared in accordance with IEEE 730-

1998 *IEEE Standard for Software Quality Assurance Plans*. Digital computer systems credited for performing safety functions comply with IEEE 7-4.3.2, Annex D or E depending on the portability of existing hardware and software platforms. Commercial-grade digital computer systems credited for performing safety functions comply with Annex D and NUREG-CR6421/EPRI TR-106439-1996. Digital computer systems specially developed to perform safety functions for MFFF comply with Annex E. Software lifecycle models will be developed as necessary to accommodate software derived from legacy code and newly developed software. Software lifecycles will be developed in accordance with IEEE 1074-1997 and Regulatory Guide 1.173.

Safety control circuits and equipment are isolated from other circuits using the methods and practices of IEEE 384-1992, *IEEE Standard Criteria for Independence of Class 1E Equipment and Circuits*. Emergency control system circuits and equipment are also isolated from other circuits using the methods and procedures identified in IEEE 384-1992 and Regulatory Guide 1.75 (Rev. 2). Testing or analysis is used to qualify isolation devices. The industry standards identified in NUREG-0800 Branch Technical Position (BTP) HICB-11 is used as the basis for qualification testing of isolation devices. Periodic testing of instrumentation and control system principle SSCs is in accordance with IEEE 338-1987, NUREG-0800 BTP HICB-17, and Regulatory Guide 1.118 (Rev. 3)

All emergency control system equipment is qualified for design basis seismic events and normal, off-normal, and design basis accident environmental conditions. The basis of seismic qualification is analysis or test in accordance with IEEE 344-1987, *IEEE Recommended Practices for Seismic Qualification of Class 1E Equipment for Nuclear Generating Stations* and Regulatory Guide 1.100 (Rev. 2). Environmental qualification complies with IEEE 323-1983, *IEEE Standard for Qualifying Class 1E Equipment for Nuclear Power Generating Stations*.

Electronic control systems are designed to reduce electromagnetic and radio frequency interference by using the methods and practices identified in IEEE 518-1982, *IEEE Guide for the Installation of Electrical Equipment to Minimize Electrical Noise Inputs to Controllers from External Sources*, and IEEE 1050-1996, *Guide for Instrumentation and Control Equipment Grounding in Generating Stations*. The design will follow the requirements of Regulatory Guide 1.180 regarding EMI required testing and acceptance criteria for principal SSC control systems.

Setpoints for the safety control subsystems and the emergency control system are developed using the methods and procedures identified in ANSI/ISA-67.04.01-2000, *Setpoints for Nuclear Safety-Related Instrumentation*. The 95/95 criteria identified in Section C.1 of Regulatory Guide 1.105 and the criteria of Section 4 of ANSI/ISA S67.04.01 are applied to setpoints credited in the safety analysis as IROFS.

The human-system interface for the safety control subsystems and the emergency control system is designed using the methods and practices of IEEE 1023-1988, *IEEE Guide for the Application of Human Factors Engineering to Systems, Equipment, and Facilities of Nuclear Power Generating Stations*. The designs for the human-system interfaces are reviewed in accordance with NUREG-0700, *Human System Design Review Guidelines*.

A seismic monitoring system is included in the design of the MFFF. The system is designed to satisfy the criteria provided in Regulatory Guide 3.17-1974, *Earthquake Instrumentation for Fuel Reprocessing Plants*. The monitoring system will activate the seismic isolation system at a setpoint of one-third of the design basis earthquake based upon the criteria of 10 CFR 50 Appendix S, IV(a)(2)(i)(A).

Combustible (i.e., hydrogen) gas detectors will be selected in accordance with ISA-12.13-Part I-1995 *Performance Requirements for Combustible Gas Detectors*. Installation, operation and maintenance of combustible gas detectors will be in accordance with ISA RP12.13-Part II-1987 *Installation, Operation, and Maintenance of Combustible Gas Detection Instruments*.

This page intentionally left blank.

Figures

This page intentionally left blank.

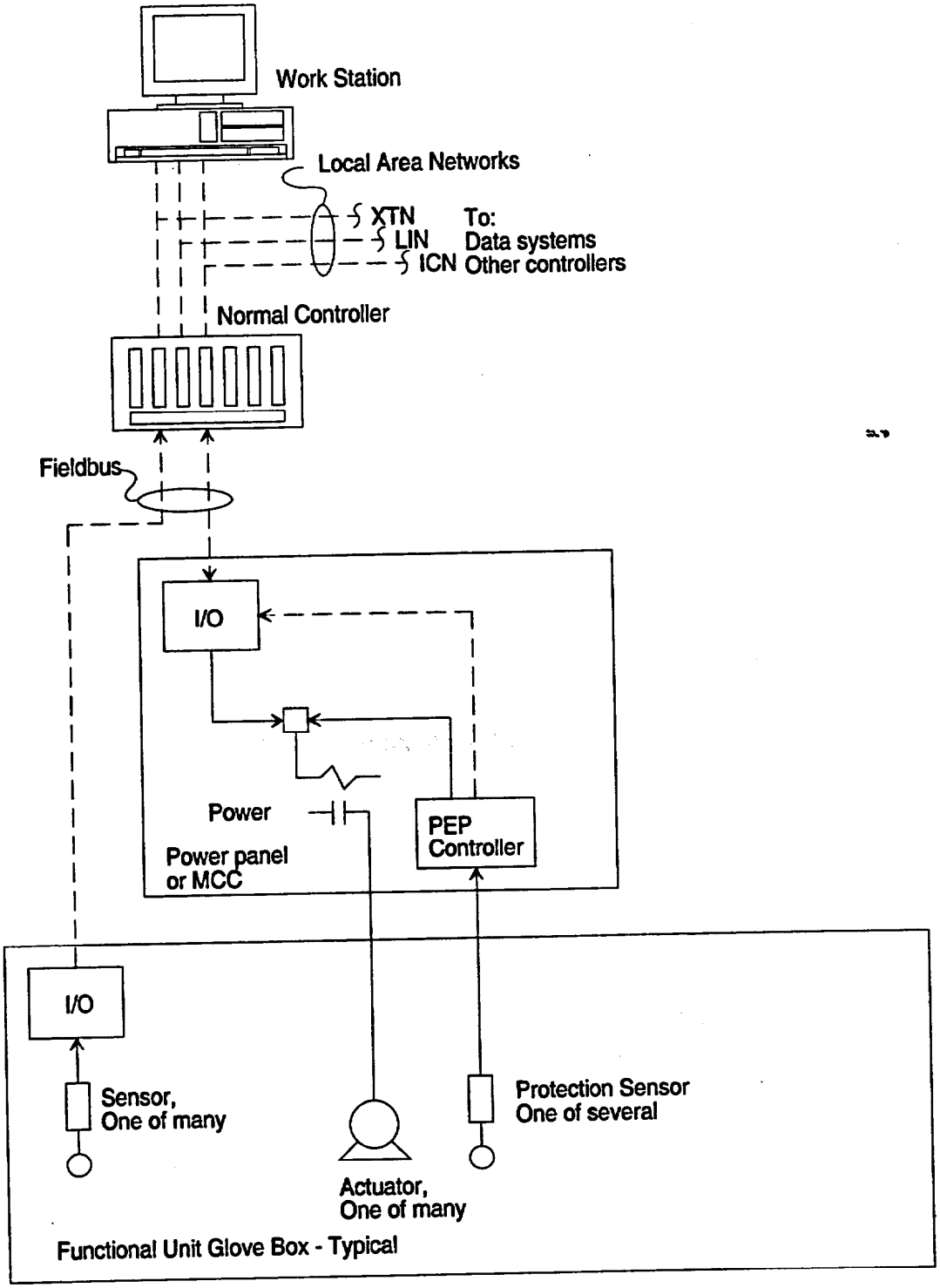

XTN – X-Terminal Network
LIN – Local Industrial Network
ICN – Immediate Control Network

Figure 11.6-1. General Configuration of Control System

This page intentionally left blank.

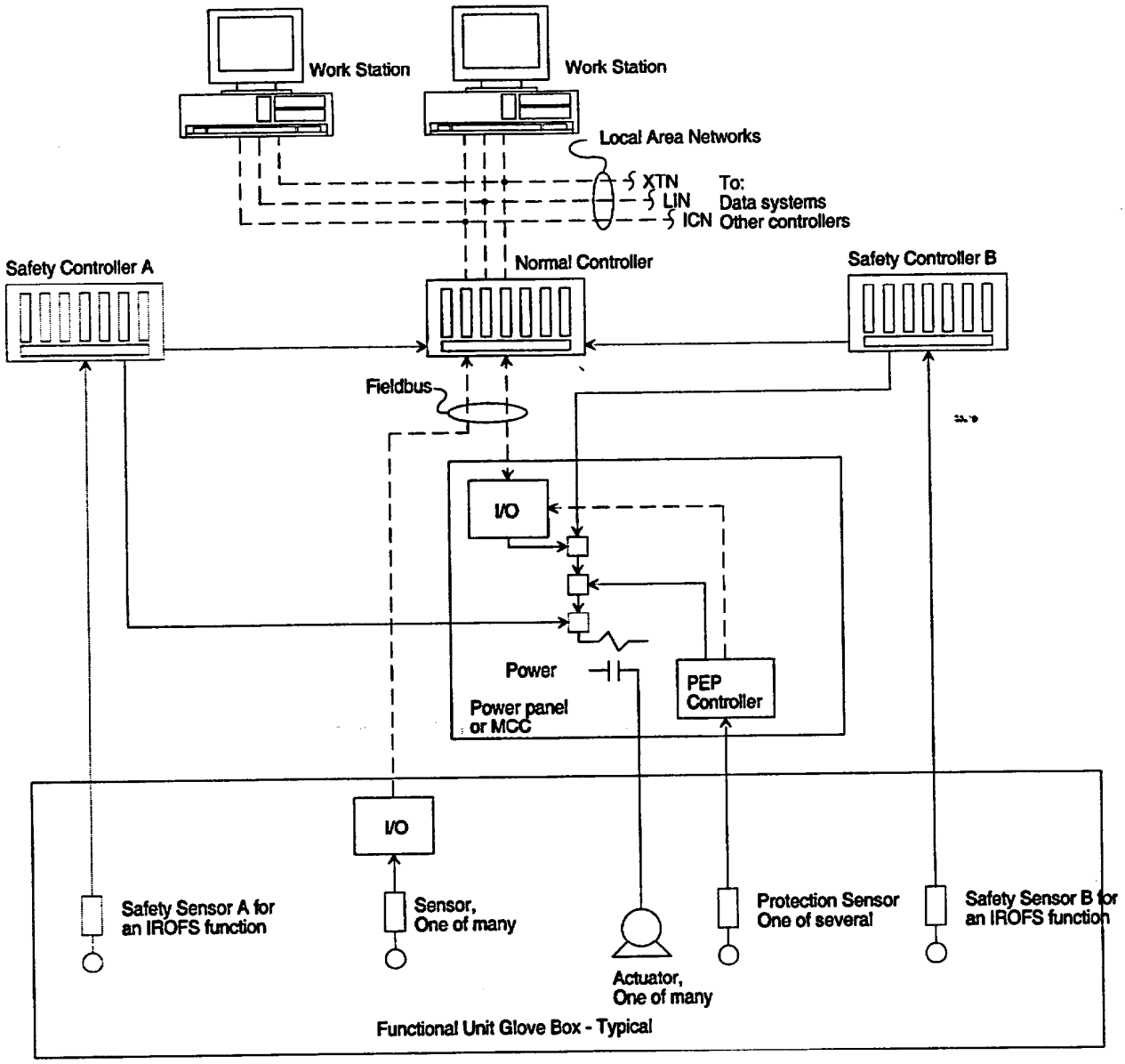

XTN – X-Terminal Network
LIN – Local Industrial Network
ICN – Immediate Control Network

Figure 11.6-2. Configuration of Safety Controller

This page intentionally left blank.

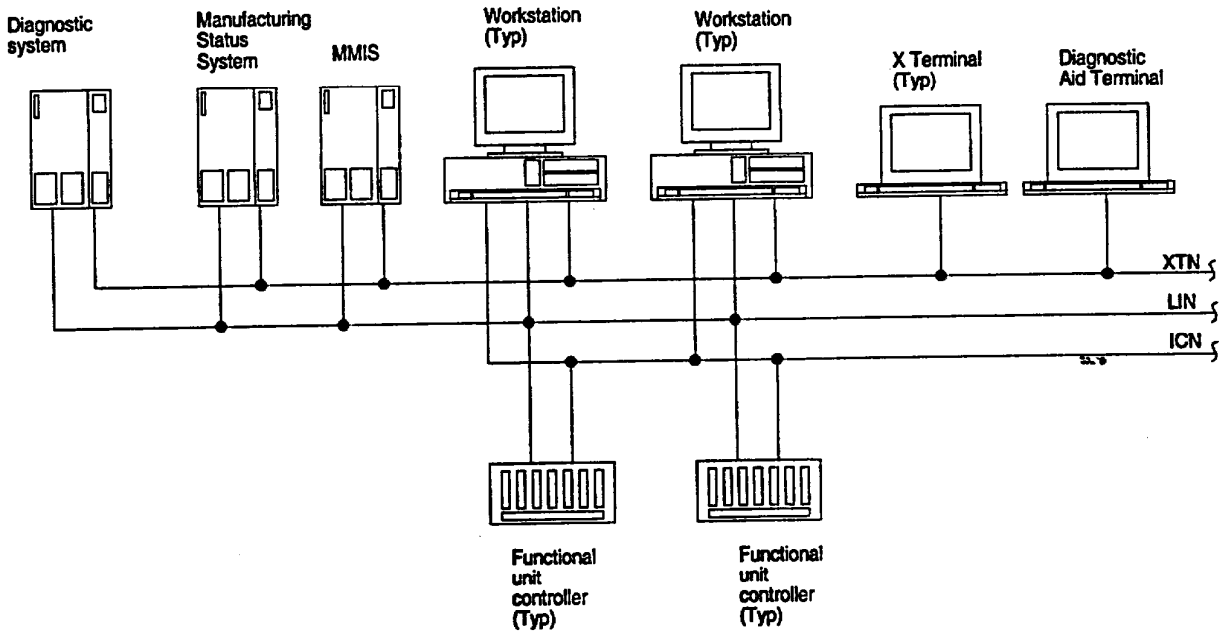

XTN – X-Terminal Network
LIN – Local Industrial Network
ICN – Immediate Control Network
MMIS – Manufacturing Management and Information System

Figure 11.6-3. Network Configuration

This page intentionally left blank.

11.7 MATERIAL-HANDLING EQUIPMENT

This section describes the functional requirements and design bases for MFFF equipment designed to transfer MOX fuel production material in a dry, solid form. Handling equipment used to process material in an aqueous form is described in Section 11.8. Heavy lift cranes are described in Section 11.10.

The equipment addressed in this section is located inside of the MP Area and the Shipping and Receiving Area. The equipment includes all devices, actuating mechanisms, and support structures engaged in the transfer of MP process materials, either located inside of or installed outside of process gloveboxes. Controls that monitor and drive material-handling equipment are included as part of the equipment functional descriptions in this section. General requirements and descriptions for the overall process control system are provided in Section 11.6.

11.7.1 Function

Material-handling systems are required to perform both safety and nonsafety functions. The principal SSCs and associated safety function for the material-handling equipment are identified in Chapter 5. Safety functions are maintained during normal operations, upset conditions, accidents, and natural phenomena events. Nonsafety functions are normally only performed during specific operating modes or equipment configurations.

The functions assigned to material-handling system elements include the following:

- Transfer MOX fuel material and components from one point in the process to another, in accordance with process throughput, positioning tolerance, mechanism reliability, and radiological shielding requirements
- Maintain structural integrity and control of process containers to ensure that the confinement boundary is not breached
- Maintain structural integrity and control of process containers to ensure that criticality control functions are performed
- As necessary, work with fire barriers to transfer material across process atmosphere or fire area boundaries
- During maintenance operations, transfer tooling and equipment spare parts from point to point inside the glovebox system.

11.7.2 Description

Several different types of equipment are used to move material from one point in the MP process to another, based on the form of the product, the container used to carry it, and the configuration of the process equipment that receives the container. General descriptions of the MP and AP processes are provided in Sections 11.2 and 11.3, respectively.

Fuel production material in the MP process portion of the plant appears in one of five general forms: powder, pellets, rods, assemblies, and waste. Each material form must be transferred

inside of containers designed to meet applicable confinement, criticality, and shielding requirements.

11.7.2.1 Powder Handling Equipment

Fuel production powder materials handled in the MP process include the plutonium oxide and depleted uranium oxide feed materials, zinc stearate and poreformer additives used to improve powder workability and control density, and dusts recovered from glovebox enclosures and returned to the fuel production process. Plutonium oxide powders are received at the facility packed in qualified shipping packages. Each shipping package holds a single container designed to meet the requirements of DOE-STD-3013. Upon receipt, the containers are removed from the shipping package, assayed, and stored until ready for use. When required by the process, the containers are removed from storage and introduced into the glovebox system. Depleted uranium powders are received and handled in sealed vinyl bags packed in drums. The zinc stearate and poreformer additives are also received in sealed containers. These materials are introduced to the glovebox system via airlocks.

Equipment used to handle palletized shipping packages includes forklifts, turntables, and bridge cranes. Individual shipping packages are transported by forklifts equipped with drum grips and roller conveyor systems. 3013 containers outside of gloveboxes are handled by automated pick-and-place cranes and robots, slide tables, or roller conveyors. Inside of glovebox enclosures, powder materials are transported inside of convenience cans, food cans, reusable cans, dust pots, sample vials, or in one of a series of powder jars. Convenience cans, reusable cans, and sample vials are loaded into shuttles that are transferred pneumatically from one glovebox to another. Powder jars and dust pots are transferred between gloveboxes inside of shielded transfer casks along sections of live roller conveyor. Elevators and rotary tilters are used to raise, lower, or dump jars as required for emptying, filling, and weighing. Powder is also transported in bulk form over short distances by gravity feed, vibrating conveyor, and direct pneumatic transfer.

Material-handling equipment designed to carry powder containers and pallets include roller conveyors, ball-screw elevators, pick-and-place robots equipped with gripping manipulators, and pneumatic transfer systems. Roller conveyor and elevator systems installed inside of glovebox enclosures are equipped with positive stops and guide rails to prevent interaction between the load and the walls or floor of the glovebox confinement boundary. Confinement for powder materials handled outside of the glovebox enclosure is provided by the container, which is qualified for a drop from heights greater than the handling height. Confinement for powder materials handled inside glovebox enclosures is provided by the enclosure. Confinement for material inside of pneumatic transfer shuttle systems is provided by double-wall piping.

11.7.2.2 Pellet Handling Equipment

Fuel pellets are transported either individually on belts, vibrating conveyors, or by robot, in bulk in open-topped molybdenum boats or stainless steel boxes, or lined up on trays that are stacked, covered, and transported as an assembly. The molybdenum boats and stainless steel boxes carry a maximum of 10 kg and 20 kg of pellets, respectively. Tray assemblies consist of 10 trays of pellets, each of which has 12 rows of pellets, 350 mm in length.

Boxes and tray assemblies are both moved from process unit to process unit via a system of horizontal conveyors, elevators, and turntables installed inside glovebox enclosures. Deployable fire doors are installed inside of enclosures that penetrate fire barriers. Pellet storage units where boxes of pellets are stored in a two-dimensional vertical array are serviced by stacker-retriever systems that transfer boxes between pick-up and drop-off stations and individual storage cubicles. The storage cubicles are equipped with mechanical stops that prevent the boxes from falling and dispersing their load of pellets inside the glovebox under seismic conditions. Provisions to prevent load drop are also included in tray assembly handling equipment. Pellet operations occur inside of glovebox enclosures or the sintering furnace.

11.7.2.3 Rod Handling Equipment

Inside of glovebox enclosures, rods loaded with pellets are moved individually from station to station via a system of roller drives and notched belt conveyors. The glovebox enclosure provides the primary confinement boundary for the fuel pellets during rod loading. After the rods are sealed, decontaminated, and removed from the glovebox enclosures, they are loaded on trays of 32 rods each. The rod cladding then becomes the primary confinement boundary. All rod-handling equipment is designed to ensure that the cladding confinement boundary remains intact during normal transfer operations, equipment malfunctions, and design basis events.

Rod trays are transferred individually by elevator and then by stacker-retriever to a two-dimensional rod storage array. Mechanical stops in the storage array prevent rods from becoming dislodged off of the trays. Trays of rods removed from storage are transferred to test, inspection, and sorting stations and to the assembly mock-up unit by the stacker-retriever and horizontal transfer tables. Individual rods are transferred to and from rod trays and to the assembly fabrication unit by roller conveyors, pick-and-place cranes, and indexing tables.

11.7.2.4 Assembly Handling Equipment

Once assembly fabrication is complete, the assemblies are oriented vertically for inspection, storage, and packaging. Completed assemblies are transferred between the assembly inspection stations and over to the assembly storage area using an overhead trolley and hoist system running on a monorail. For transfer of the assembly into storage, the overhead trolley runs out onto the girder of a bridge crane, which provides access both to the assembly storage bays and to the fuel shipping package loading area. The handling equipment and storage position fixtures are designed to ensure that the rod cladding confinement boundary remains intact during all transfer operations, equipment malfunctions, and design basis events.

In preparation for shipment, fuel assemblies are removed from storage and clamped to a frame or strongback that fits inside of the fresh fuel shipping package. The strongback, which holds three fuel assemblies, is oriented vertically to receive the assemblies and then rotated to a horizontal position for insertion into the fuel package. Fixed-geometry handling equipment is used to manipulate the strongback. The fresh fuel shipping package is handled using a combination of overhead hoisting equipment and mobile transfer pallets. Bridge cranes in both the shipping package loading area and the shipping package truck bay transfer the package between the air pallet and staging or storage positions, or enable the installation or removal of shipping bumpers. This hoisting equipment is described in Section 11.10.

11.7.2.5 Waste Handling Equipment

Waste materials handled include low-level and transuranic wastes, typically stored in 55-gallon drums. Waste drums generated throughout the fuel processing area are transferred to the storage area for processing. In the waste storage area, the drums are placed on a conveyor and scanned to ensure that they do not exceed waste material limits and then are placed on pallets, four drums per pallet. The pallets are transferred to positions in a storage rack by a fixed-mast bridge crane storage and retrieval system. Pallets are individually retrieved from the rack, processed through a waste nuclear counting unit, and returned to storage to await shipment.

11.7.3 Major Components

Typical components of material-handling systems include motors, power transmission systems and glovebox pass-throughs, carriers, actuators, end effectors, structural supports, sensors, and control systems. Material-handling equipment inside gloveboxes is provided with redundant brakes on lifting equipment, structural oversizing of mechanical drive equipment, overspeed detection, overtorque detection, mechanical stops, electrical interlocks, and component sizing based on worst case loading combinations. The number and type of these components in each process unit vary based on the configuration of the unit, product forms and containers, and material throughput requirements. Specific IROFS will be identified by the ISA as part of the final design.

11.7.4 Control Concepts

Material-handling equipment controls are designed to function in one of several different operating conditions: normal operations, off-normal or accident conditions, and maintenance.

For most operations, the process control system automatically directs the material handling equipment to perform transfer operations in accordance with process demands. Occasionally, personnel are required to respond to local alarms or equipment malfunctions.

In the event of an off-normal or accident condition, control system elements with the capability to override the normal process control elements respond to mitigate the potential hazardous condition. The two higher-level control systems that affect material-handling equipment are the personnel and equipment protection (PEP) controllers and the safety controllers. The PEP controllers detect equipment malfunctions or personnel interactions that could result in human injury or equipment damage and respond by de-energizing the affected actuators. Handling devices are normally designed such that the "fail as is" condition is a safe condition and that required functions (e.g., retaining payloads) are performed under a loss of electrical power and a seismic event. Therefore, handling devices are not normally provided with emergency power.

During maintenance operations, process equipment is normally de-energized in accordance with occupational safety procedures. Equipment required to perform maintenance activities inside the process enclosures, including hoists, conveyors, and tools powered from convenience outlets, may selectively be energized under manual control of maintenance personnel.

11.7.5 System Interfaces

Material-handling equipment shares interfaces with many process unit components, as well as external utility supply and control systems. Process unit components include major process equipment items, the glovebox enclosure, and instrumentation and controls. Physical and functional interfaces between these elements include the following:

- Structural connections that support the equipment
- Mechanical penetrations through which motion is transferred
- Electrical connections between process controls and motors, actuators, and sensors
- Transfer points where control of material containers is passed from one device to the next
- Windows and glove ports in the glovebox boundary, which provide visual and physical access to equipment for maintenance.

Interfaces between material-handling equipment and external utility systems include connections between motors and electrical power, the compressed nitrogen supply to pneumatic actuators inside the glovebox, supply of the hydrogen-argon atmosphere to the sintering furnace, and the glovebox and other ventilation systems, which maintain temperatures and pressure differentials within prescribed limits.

11.7.6 Design Basis for Non-Principal SSCs

Material-handling systems and their supports are designed, fabricated, and qualified to perform required functions in accordance with the following national codes and standards:

- **Structural Integrity** – Components required to maintain structural integrity are designed and qualified in accordance with AISC ASD, *Manual of Steel Construction, Allowable Stress Design*, 9th Edition, 1989
- **Cranes** – Overhead cranes are designed in accordance with ASME B30.2-1996, *Top Running Bridge, Single or Multiple Girder, Top Running Trolley Hoist Overhead and Gantry Cranes*. Bridge cranes comply with CMAA-70-1994, *Specifications for Top Running Bridge and Gantry Type Multiple Girder Electric Overhead Traveling Cranes*.
- **Hoisting Equipment** – Hoists are designed in accordance with ASME B30.16-1998, *Overhead Hoists*.

Material handling equipment installed inside the gloveboxes is designed to meet glovebox material and surface finish requirements and to function under the conditions found in the glovebox interiors. MOX powder, dust, or debris buildup on handling equipment installed inside gloveboxes is limited by design. In addition, material-handling equipment decontamination is facilitated by design (e.g., the mounting of a stainless steel casing to prevent powder/dust retention on material handling support structures). Also, equipment is easily visible, accessible, and dismantled for maintainability and decontamination. Sealed bearings or leak-free coupling mechanisms are used when appropriate. Lubricant use is limited to the extent practical. The surface quality or coating of equipment minimizes powder/dust retention and facilitate

cleaning/decontamination. Internal welds are continuous and ground smooth, and re-entrant corners have a large radius. A portable vacuum cleaner or glovebox vacuum network (for some powder processing gloveboxes) is used to minimize powder/dust retention and used to cleanup any spilled powder or dust.

Material handling equipment installed outside of gloveboxes but in C3b process rooms have painting applied, as necessary, to facilitate decontamination.

11.7.7 Design Basis for Principal SSCs

Material-handling systems that are designated as principal SSCs are designed and qualified to perform their safety functions during normal operations, upset conditions, and design basis events.

The general design principles that apply to systems required to perform criticality safety functions are discussed in Chapter 6. Criticality controls on the material-handling system will be developed as part of the detailed design.

Material-handling equipment and support structural members are designed to prevent physical interaction with confinement boundary elements or principal SSCs under worst-case loading associated with normal, upset, and design basis events.

To prevent physical interaction, the following design principles are applied:

- Equipment inside and outside gloveboxes is designed to be supported in such a way as to maintain clearance between the equipment and the confinement boundary under all conditions, including preventing uncontrolled motion of objects capable of breaching the confinement boundary.
- Physical stops are incorporated in material-handling equipment designs to prevent the uncontrolled motion of payloads capable of breaching confinement in the event of over-travel or seismic conditions.
- Equipment that utilizes actuating mechanisms to grip payloads capable of breaching confinement is designed to ensure that the mechanisms retain the payload under all conditions, including loss-of-power events and seismic conditions.
- Equipment used to hoist loads that could impact confinement boundary elements is designed and qualified with appropriate margins of safety.

All material-handling equipment will be operated in accordance with Material Handling Controls as described in Section 5.6.2.3.

Codes and standards used to qualify material transport principal SSCs include the following:

- **Structural Integrity** – Components required to maintain structural integrity are designed and qualified in accordance with ANSI/AISC N690-1994, *Specification for the Design, Fabrication, and Erection of Steel Safety-Related Structures for Nuclear Facilities.*

- **Cranes** – Overhead cranes are designed in accordance with ASME B30.2-1996, *Top Running Bridge, Single or Multiple Girder, Top Running Trolley Hoist Overhead and Gantry Cranes*. Bridge cranes comply with CMAA-70-1994, *Specifications for Top Running Bridge and Gantry Type Multiple Girder Electric Overhead Traveling Cranes.* Bridge cranes also comply with NUREG-0554, *Single Failure Proof Cranes at Nuclear Power Plants.*
- **Hoisting Equipment** – Hoists are designed in accordance with ASME B30.16-1998, *Overhead Hoists.*

This page intentionally left blank.

11.8 FLUID TRANSPORT SYSTEMS

The MFFF fluid transport systems include the mechanical components that handle the process and utility fluids. This section provides design information on process equipment, pumps, piping, and valves that is applicable to MP, AP, and fluid systems. The balance of the descriptions of MFFF fluid transport systems are included in the process descriptions provided in Section 11.2 for the MP process, Section 11.3 for the AP process, and Section 11.9 for the fluid systems.

11.8.1 Function

The primary function of the fluid transport systems is the safe and reliable handling of the process and utility fluids during AP, MP, and reagent processes. The safety function of the principal SSCs associated with the fluid transport systems is discussed in Chapter 5.

11.8.2 Description

The fluid transport systems consist of those components that contain process fluids and utility fluids. SSCs include process equipment (e.g., vessels, tanks, pulsed columns, and exchangers), pumps, piping, and valves.

Fluid transport components are hydraulically designed for the most severe service conditions. Radiological fluids are maintained within at least two levels of confinement. The confinement concepts are described in Section 11.4. Vessels containing radiological fluids are mounted over drip trays to collect any leakage. Each drip tray is sized to hold the contents of the largest vessel in a critically safe configuration where appropriate. Radiological fluids are transferred using static transfer means, such as gravity flow, airlifts, air jets, and steam jets when practicable. Systems containing hazardous fluids either are contained within trenches, rooms, or double-walled piping; or are accessible for inspection and have fully welded construction.

Fluid-bearing components located within process cells are specified with corrosion allowances, and the welding joints are radiographed, as appropriate. Each process cell is lined with a drip tray with a sump, and the sump is monitored for leakage. The components located in the process cell are not normally accessible; however, the cell can be accessed for maintenance, if required. The process fluid can be isolated from the cell, and decontamination fluid can be used to flush equipment and piping. While many such components contain plutonium in excess of gram quantities (as indicated in NUREG-1718, Section 11.4.7), process cell and welded equipment confinement for liquid containing systems easily provides for adequate protection of personnel.

Flushing and high-pressure decontamination fluid is provided to remove sediment buildup and any blockage, if necessary. The blockage is dissolved in the decontamination fluid and drained to a tank. If necessary, the process pipes that could short-circuit the decontamination fluid are temporarily blocked using a cryogenic jacket.

The layout design further takes the following considerations into account:

- The layout of the fluid transport system components in an occupied room is designed to permit ease of egress and evacuation, as well as material movement.

- Passageways have adequate dimensions for the movement, repair, installation, or removal of proposed or anticipated equipment. Ergonomic factors are considered in the selection and placement of equipment components to facilitate operation and maintenance.
- Piping in dedicated galleries throughout the facility is centralized, to the extent practical.
- The component engineering design basis is defined from thermal and hydraulic calculations, considering the physical and chemical properties of the process fluid.
- Components handling aqueous radioactive materials are designed as welded construction (e.g., tanks and piping) to the fullest extent practical and located in the process cells. Components that do not permit fully welded construction are installed in a glovebox.
- Piping components carrying radiological fluids are either fully welded with double-wall construction between two confinements or installed in gloveboxes. Section 11.4 describes the confinement system.
- Components handling radiological fluids are designed to withstand the design earthquake.
- The components involved in radiological processes are located within the multi-story, hardened, reinforced-concrete structure evaluated for natural phenomena (e.g., earthquakes, floods, and tornadoes) and potential industrial-type accidents (e.g., load drops and fire).

11.8.3 Major Components

The major components of the Fluid Transport System at the MFFF are discussed below.

11.8.3.1 Welded Equipment, Piping, and Valves

11.8.3.1.1 Welded Equipment used in the MFFF processes

Stationary process equipment that handles the process and utility fluids, made of fabricated metal construction, is commonly known as welded equipment

Welded equipment is designed, engineered, fabricated, and installed commensurate with its function and applicable quality assurance (QA) classification (i.e., quality level) and Fluid transport System (FTS) category (see Section 11.8.3.3). (QA classifications/quality levels are discussed in Section 15.1 and the MOX Project Quality Assurance Plan.) Welded equipment includes storage tanks, process columns, and exchangers. The following sections discuss the different types of welded equipment used at the MFFF.

11.8.3.1.1.1 Criticality-Safe Vessels (Storage Tanks)

Process fluids with a significant quantity of radiological material that pose criticality risks are stored in the criticality-safe vessels, such as slab tanks and annular tanks. These tanks are specifically designed, constructed, and allocated to Aqueous Polishing (AP) units.

11.8.3.1.1.2 Conventional Vessels

These vessels are designed and constructed in accordance with the good engineering practices used in industries, national code practices, and supplemental requirements as the function and performance require.

11.8.3.1.1.3 Standardized Equipment

Some of the AP units use standardized mechanical equipment, which processes fluids containing radiological materials and significant levels of radioactivity. Equipment such as separator pots demisters, leak detection pots, low-pressure airlifts, ejectors, and siphons facilitate the fluid and reagent transfer in the AP process units

11.8.3.1.1.4 Process Columns

The AP and Reagent process units use pulse columns, rectification columns, packed columns, scrubbing columns, and columns with trays for distillation and other mass transfer processes

11.8.3.1.1.5 Exchangers

Evaporators, condensers, and jacketed heaters or coolers are used at the MFFF process units to transfer the required heat loads. The types of heat exchangers include shell and tube exchangers, steam and electric jacketed heaters, and jacketed coolers.

11.8.3.1.1.6 Miscellaneous Components

Miscellaneous equipment includes pumps, filters, mixing tanks, and precipitators. Components that handle radioactive material and that require opening for maintenance are located in gloveboxes.

11.8.3.1.2 Piping and Valves

Piping and valves provide the network for process and utility fluids to be transported to and from process equipment. Piping classified as FTS category 1 is either welded construction or installed within gloveboxes.

11.8.3.2 Material of Construction

The material of construction for the fluid transport system components is selected from the basic materials that are compatible with the physical and chemical characteristics of the process fluids, which includes consideration of corrosion where applicable. Stainless steel 304L or 316L and specialty materials titanium and zirconium are used for FTS category 1 components that handle process fluids with acidic and radiological properties. FTS category 2 and 3 components handling process fluids that are acidic or alkaline in nature are also constructed from stainless steel 304L or 316L materials.

The materials for components are specified in accordance with the material specifications of the American Society of Mechanical Engineers (ASME) or American Society for Testing and

Materials (ASTM). ASME materials are used for the fabrication of equipment and piping components that are built to the requirements of ASME Section VIII, *Pressure Vessels*, 1996 Edition through 1998 addenda, and American National Standards Institute (ANSI)/ASME B31.3, *Process Piping*, codes. ASTM materials are used for other components. Where applicable, supplemental requirements incorporating nonmandatory corrosion tests are part of the material specification and selection program for FTS category 1, 2, and 3 fluid transport components.

The corrosion allowance for the construction materials is specified for each component in accordance with industry practices and from experience at the La Hague facilities.

To limit system corrosion through the use of materials compatible with the surrounding environment and system fluids, corrosion allowances have been applied to the fluid transport system component design and implemented on the following basis:

- Compatible materials of construction are selected that are known to have low corrosion kinetics for the process fluid(s) in a given process and surrounding conditions. The corrosion allowance in the engineering design development is accounted in accordance with national code practices.
- Design basis applied to FTS components (equipment and piping components) take into consideration the galvanic corrosion phenomena. The considerations applied to eliminate occurrences of galvanic corrosion avoid use of dissimilar metal joints with the MFFF plant systems and include:
  - Use insulating gaskets and insulating sleeves to prevent propagation of galvanic current when joints with dissimilar metals known for galvanic corrosion are used.
  - Design of such a sleeve fitting or flanged joint requires periodic inspection, maintenance, and surveillance.
  - An FTS component using such an application and part of radiological process units are located in a glovebox.

11.8.3.3 Fluid Transport System Categories for Equipment and Piping Components

The function of the fluid transport systems is the safe and reliable handling of process and utility fluids during the manufacturing processes. A categorization method is established to describe the various combinations of applicable component and material codes, seismic categories (see Section 11.1), and quality levels (see Section 15.1) for fluid transport SSCs. The applicable codes and standards are described in the following four FTS categories (Table 11.8-1):

- **FTS Category 1** – Includes components that are principal SSCs which contain process fluid with significant quantities of plutonium or americium. Table 11.8-1 lists the codes and standards that are applied to the design, engineering, construction, and operation of these components. The criteria for the materials, fabrication, examination, testing, and installation of these components are derived from applicable codes and augmented by experience at the La Hague facilities.

- **FTS Category 2** – Includes components that are principal SSCs which may contain process fluids with trace quantities of plutonium or americium or nonradiological fluids. Table 11.8-1 lists the codes and standards that are applied for design, engineering, construction, and operation of these components. Note that enhanced positive material identification, inspection, and test requirements are used in the engineering and procurement specifications for category 2 components.
- **FTS Category 3** – Includes components that are non-principal SSCs which may contain process fluids with trace quantities of plutonium or americium or nonradiological fluids that play a significant role for plant production reliability. Table 11.8-1 lists the codes and standards that are applied for design, engineering, construction, and operation of these components.
- **FTS Category 4** – Includes components, as well as facility services, that maintain production reliability. Table 11.8-1 lists the codes and standards that are applied for design, engineering, construction, and operation of these components.

11.8.3.4 Build-up of Solids

To minimize or eliminate the buildup of solids within the AP-liquid process units, the following measures are taken:

- The process technology does not involve suspension of the solid particles in liquid past the dissolution stage (prior to precipitation).
- Undissolved particles in the dissolution unit are removed through multiple stages of filters.
- The liquid solutions used in the processes are not saturated solutions.
- Air spargers are provided as necessary to keep solutions well mixed.
- Decontamination fluid is supplied throughout the AP process units to remove any potential buildup.
- Piping layout is designed with an adequate slope, without sharp directional change, and without low point traps.
- Demisters are cleaned periodically with decontamination solution
- Freeze jackets and fluid thermal cycling are used to prevent clogging of piping.

Means are provided to minimize build-up of solids in the powder handling processes as follows:

- The dry process environment minimizes ingress of moisture.
- Process equipment is stacked vertically. To the extent practical, the shortest gravity feed chute and controlled vane volumetric feeders are used to feed the powder.

- The surface finish provides non-sticking tendencies.
- Vibrators maintain free fall gravity feed at selected locations.

11.8.4 Control Concepts

The control concepts applied for the process instrumentation and controls to the fluid transport systems components are provided in Section 11.2 for the MP process, Section 11.3 for the AP process, and Section 11.9 for fluid systems.

Process parameters for the fluid transport system components including pressure, temperature, flow and volumetric capacities are integrated from process systems design described in Section 11.2, 11.3, and 11.9. The design is based on applicable practices as shown in Table 11.8-1 and 11.8.2. The seismic design and performance requirements are described in Section 11.1 and 11.12.

11.8.5 System Interfaces

Interfaces involving the fluid transport systems with the MP units, AP units, and fluid systems are provided in Section 11.2 for the MP process, Section 11.3 for the AP process, and Section 11.9 for fluid systems.

MFFF process systems are provided with various design features to prevent the backflow of process fluids into associated utility or auxiliary interfacing systems. These features that perform isolation functions are discussed in the following sections:

11.8.5.1 Process Vessel Venting

AP process vessels are vented to the Offgas Treatment System. This design feature prevents pressure perturbations that may result in the backflow of process fluids between process vessels.

11.8.5.2 Transfer Line Design Features

- Separator or knockout pots are provided in those lines in which fluid transfer is made by air or vacuum lift. The separator pot body separates the lift mechanism airflow from the process fluid. The separated liquid is allowed to flow by gravity into the desired vessel, while the motive airflow vents at the top of the pot. The vented separator pot prevents back flow siphoning.
- Steam jet lift transfer piping is terminated in the receiving vessel vent space, to provide an air gap to prevent siphon and backflow.
- Siphons are used to initiate gravity transfer of fluids in those applications that do not require flow regulation (e.g., tank emptying). Evacuation of siphon transfer piping causes liquid to raise from the upstream tank to the point at which the liquid begins to flow into the downstream tank by gravity. The relative elevations of the upstream and downstream tanks prevent backflow. The transfer of process fluids by siphon is highly reliable as it requires no moving parts, does not dilute process fluids, and is not prone to clogging.

- Hydraulic seals and gravity head separation are utilized as a means to prevent backflow of process fluid to the auxiliary systems during reagent addition. The liquid plug or seal is maintained by piping configuration and provides isolation between vessels that are maintained at different ambient pressures. AP process equipment handling radioactive fluids are vented to the Offgas Treatment System.
- The hydraulic seal design implements bent "U" type seal tubes or hydraulic seal pots to ensure that:
    - The seal remains filled with liquid at all times.
    - The liquid seal withstands the internal pressure of connecting vessels.
    - Siphon action is not initiated.
- Fully welded intermediate loops are used to supply the process with thermal fluids.
- The use of check valves is implemented in plant systems only within the envelope of the process fluid pressure boundary. Check valve response times required to prevent pressure surges and flow reversals are considered in system design. Check valve selection is based upon valve effective pressure drop, type of seating material, pressure and flow reversal response, mounting requirements, and reliable operation and maintenance.
- Prevention of flooding in process areas by reagent and utility fluids in the event of earthquake by use of appropriately designed isolation valves.

11.8.5.3 Component Isolation in the Event of an Earthquake

MFFF process systems are shut down in the event that earthquake conditions are detected. This is achieved by the following:

- Air and steam supplies that provide process fluid motive force are isolated by means of the redundant isolation valves described above.
- Process prime movers powered by normal electrical power are stopped. Those electrical loads requiring power for safe process shutdown are supplied with the emergency uninterrupted power.
- Fluid transport system components handling radioactive materials are designed for the design earthquake. In the event of system breach, liquids are collected and maintained in the same confinement at the bottom drip tray within the process cells or gloveboxes and recycled through the waste treatment management units.

Design details for Seismic Isolation Valves

- Service fluid isolation in the pipeline. Types of isolation valves that can be used are butterfly, gate, plug or ball valves.

- The construction design for the isolation valve to be determined on the basis of chemical characteristics of the fluid, piping material of construction, and operating conditions. The valve construction design to satisfy good engineering practices used in process and service industries, and in accordance with applicable code practices.
- Automatic valve (fail safe to close) operation through pneumatically operated actuator will be designed to isolate fluid within seconds of sensing earthquake.
- Integrity of structural supports used for the valves and monitoring system will ensure that the monitoring service remain operational in conditions such as an earthquake.

11.8.6 Design Basis for Non-Principal SSCs

The design ensures that principal SSCs are not adversely impacted by non-principal SSCs. The design, engineering, and construction for the non-principal SSCs are ensured by implementing the applicable codes, standards, and practices as defined in FTS categories 3 and 4 and in Table 11.8-1.

11.8.7 Design Basis for Principal SSCs

Principal SSCs are identified in Chapter 5. IROFS will be defined in the ISA. The design, engineering, and construction for principal SSCs are ensured by implementing the codes, standards, and practices as defined in FTS categories 1 and 2 in Table 11.8-1 and Table 11.8-2.

The PSSCs applicable to the fluid transport system components are as follows:

Backflow prevention features

The following features are used to prevent backflow:

- Venting to Offgas Treatment
- Use of Separator or Knockout Pots
- Elevation difference
- Hydraulic seals
- Check valves.

The design basis codes and standards used to design these features are classified as FTS category 1 or FTS category 2 and are designed in accordance with Tables 11.8-1 and 11.8-2.

Fluid Transport Systems

To ensure the fluid transport systems consisting of vessels, pumps, piping, and valves are designed to prevent process deviations from creating overpressurization events they are classified as FTS-1 or FTS-2 and are designed in accordance to Tables 11.8-1 and 11.8-2.

Double Walled Pipe

To prevent leaks from pipes containing radiological process fluids in a C3 area outside of a glovebox from leaking into a C3 area, the pipe containing the fluids uses double walled construction to contain the leak and is sloped so that leaks are directed to the open end of the containment pipe and into a process cell or glovebox. Components are classified as FTS category 1 or FTS category 2 and are designed in accordance with Tables 11.8-1 and 11.8-2.

Seismic Isolation Valves

To prevent the uncontrolled release of hazardous materials within the MFFF building in the event of an earthquake, the following features are included as design basis:

The isolation of utility and reagent fluids from the process area is achieved by isolation valves in the piping as it enters the process building. Redundant isolation valves are provided to automatically isolate the fluid lines if earthquake conditions are detected. The isolation valves fail safe to the closed position. Isolation valve selection is based on process hydraulics, required control system characteristics, mounting requirements, and other valve specifications.

Seismic isolation valves are classified as FTS category 1 or FTS category 2 and are designed in accordance with Tables 11.8-1 and 11.8-2.

This page intentionally left blank.

Tables

This page intentionally left blank.

Table 11.8-1. Design Basis Codes and Standards, Fluid Transport System Components

FTS Category	FTS Category 1	FTS Category 2	FTS Category 3	FTS Category 4
Process Vessels	• ASME[5] Section VIII Div. 1 or 2 for Lethal Service with the Enhanced Positive Material Identification (PMI), Test and Inspection requirements[1,2]	• ASME[5] Section VIII Div. 1 or 2[1,2] • Compressed Gas Association (CGA) S1-1, CGA S-1.3	• ASME[5] Section VIII Div. 1 or 2 • UL-142 • CGA S1-1, CGA S-1.3	• ASME[5] Section VIII Div. 1 • UL-142 • CGA S1-1, CGA S-1.3
Pumps	• ASME, B73.1 & B73.2 (Enhanced design specification per ASME materials, with PMI and inspection requirements) • Specialty pumps per manufacturer's standards (submerged rotor seal-less pumps)[1,2] • American Petroleum Institute (API)-610	• ASME B73.1 & B73.2[1,2] • Specialty pumps per manufacturer's standards (submerged rotor seal-less pumps)[1,2] • API-610[3]	• ASME B73.1 & B73.2, and Hydraulic Institute Standards • Specialty pumps per manufacturer's standards (submerged rotor seal-less pumps)	• ASME B73.1M & .2M, Hydraulic Institute Standards • Specialty pumps per manufacturer's standards (submerged rotor seal-less pumps)
Piping	• ANSI/ASME B31.3 Cat. M (with enhanced PMI, Test and Inspection requirements)[1,2]	• ANSI/ASME B31.3 with enhanced Test and Inspection requirements [1,2]	• ANSI/ASME B31.3	• ANSI/ASME B31.3
Valves	• ANSI/ASME B31.3 Cat. M[1,2]	• ANSI/ASME B31.3 [1,2]	• ANSI/ASME B31.3	• ANSI/ASME B31.3
Other [4] Criteria	Seismic Category SC-1 Quality Level (QL)-1 (for all principal SSCs)		Conventional Seismic CS or SC-2, as applicable QL-2, QL-3, or QL-4, as applicable	

1 The enhanced positive material identification, inspection, and test requirements are developed and defined in the engineering and procurement specifications.

2 Specific requirements based on COGEMA's experience at the La Hague facilities are incorporated in MFFF Standard Engineering practices and applicable Engineering Specifications.

3 For principal fire suppression SSCs

4 Components that form an interface between Seismic Category SC-I and non-SC-I components are classified as Seismic category SC-I.

5 1996 edition through 1998 addenda.

Table 11.8-2. Design Basis Parameters for, Fluid Transport System Components

Design Basis	Design Pressure	Design Temperature	Design Flow & Volumetric Capacities
Storage Tanks	Max value from following: ▪ Pressure (max) acting at the top of the vessel in normal operating condition + 10% OR ▪ Pressure (max) acting at the top of the vessel in accidental or incidental (transient) conditions	Max value from following: ▪ Temp (max) in normal operating condition ▪ Temp (max) in accidental or incidental (transient) conditions	▪ Maximum flow in normal operating conditions + 20% ▪ Volumetric capacity for vessels is determined on the basis of process safety and operation reliability requirements.
Process Columns	Same as above	Same as above	Same as above
Exchanger	Same as above	Same as above	Same as above
L/P prime movers like air lifts, ejectors, siphons, and etc.	Same as above	Same as above	▪ Process hydraulic calculation
Piping & Valves	Max value of the following: • Max. pressure in normal operating condition + 10% OR • Max. pressure in normal operating condition + 0.9 barg. (13 psig) • Maximum pressure in transient condition	Maximum value from the following: • Max. temperature in normal operating condition +15 deg. C (27 deg. F) • Max. temperature in transient condition	▪ Pipe sizing per line velocity and pressure drop requirements.

11.9 FLUID SYSTEMS

The fluid systems in this section consist of fluids, gases, and reagents that do not contain radioactive materials. The systems are grouped into three primary categories:

- **Mechanical Utility Systems** – These systems include the water systems, emergency and standby diesel fuel systems, air systems, and the vacuum radiation monitoring system (Section 11.9.1).
- **Bulk Gas System** – These systems include the nitrogen, argon, hydrogen, helium, and oxygen systems (Section 11.9.2).
- **Reagent Systems** – These systems include chemical solutions that are consumed in the AP process or in the laboratory area in the MOX Fuel Fabrication Building (Section 11.9.3).

11.9.1 Mechanical Utility Systems

The Mechanical Utility Systems that support the MOX Fuel Fabrication Building are as follows:

- HVAC Chilled Water System
- Process Chilled Water System
- Demineralized Water System
- Process Hot Water System
- Process Steam and Process Condensate Systems
- Plant Water System
- Emergency Diesel Generator Fuel Oil System
- Standby Diesel Generator Fuel Oil System
- Service Air System
- Instrument Air System
- Breathing Air System
- Vacuum Radiation Monitoring System.

The safety function of the principal SSCs associated with the mechanical utility systems is discussed in Chapter 5.

11.9.1.1 HVAC Chilled Water System

11.9.1.1.1 Function

The function of the HVAC Chilled Water System is to supply chilled water to the primary plant coolers (supply fan coils) and individual area fan coils of the main MOX Fuel Fabrication Building HVAC Supply Air System.

11.9.1.1.2 Description

The HVAC Chilled Water System consists of (1) an external loop to provide chilled water at approximately 43°F (6°C) to the main HVAC Supply Air System supply fan coils, and (2) an

internal cooling loop to provide cooling water to individual area fan coils. Intermediate heat exchangers are used to maintain separation between the external and internal cooling loops.

The external cooling loop provides chilled water to the main HVAC Supply Air System cooling coils and the tube side of the intermediate heat exchanger for cooling of individual area fan coils. The external cooling loop contains a small amount of glycol for freeze protection. This loop consists of multiple, parallel, air-cooled HVAC chillers and circulating pumps (located outside of the MOX Fuel Fabrication Building) and the tube side of the main HVAC Supply Air System supply fan coils (located inside of the MOX Processing Building). The external cooling loop fluid penetrations into the MOX Fuel Fabrication Building are provided with double isolating valves to automatically isolate during a seismic event to prevent flooding in the MOX Fuel Fabrication Building and water escaping the external loop.

The internal cooling loop provides chilled water to each area fan coil in the HVAC Supply Air System. This cooling loop consists of the shell side of the intermediate heat exchanger, circulating pumps, and the tube side of each area fan coil. Area temperature control is maintained by bypassing or routing chilled water to each fan coil as seasonally and operationally needed.

Intermediate heat exchangers maintain separation between the external and internal cooling loops. Piping is designed for design basis seismic conditions and takes into account thermal and pressure stresses, erosion, and corrosion.

Figure 11.9-1 provides a schematic of the HVAC Chilled Water System.

11.9.1.1.3 Major Components

The major components of the HVAC Chilled Water System are as follows:

- **HVAC Chillers** – Multiple, parallel, air-cooled HVAC chillers are used to supply the required chilled water to the HVAC Supply Air System. Total chiller capacity is sized to provide chilled water for the maximum seasonal cooling load plus excess capacity and to provide the ability to maintain one chiller in a standby or maintenance mode. The maximum seasonal cooling load for the entire MOX Fuel Fabrication Building has been estimated to be approximately 1,520 tons. The chillers are placed in service and loaded as seasonally needed by automatic load controllers sensing chiller outlet temperature. These chillers are located outside of the MOX Fuel Fabrication Building.
- **Circulating Pumps** – Multiple, parallel, centrifugal circulating pumps are provided for both the external and internal cooling loops.
- **Intermediate Heat Exchanger** – The heat exchanger provides cooling water to the internal cooling loop for cooling individual area fan coils in the HVAC Supply Air System as required by local area temperatures. It maintains separation between the external and internal cooling loops from areas requiring moderation control to prevent criticality and the potential spread of contamination to the outside environment (external cooling loop).

11.9.1.1.4 Control Concepts

The HVAC Chilled Water System is controlled from the Utilities Control Room (B-319) or the Remote Auxiliary Utilities Control Room (D-301) as described in Section 11.6.2.5. The control concepts for the HVAC Chilled Water System are as follows:

- **HVAC Chiller Operation and Load Control** – The HVAC chillers are placed in service and loaded as seasonally needed by automatic load controllers sensing chiller outlet temperature.
- **Main HVAC Supply Air System Supply Coil - Flow Bypass Control** – Chilled water flow to the main HVAC Supply Air System supply coils is automatically routed through or bypassed around the cooling coil as needed, based on building temperatures. Total flow is maintained constant by bypasses around the HVAC Supply Air System cooling coils from the supply to the return header. Flow is controlled by three-way bypass valves that are modulated based on building temperatures.
- **Internal Cooling Loop Bypass Flow Control** – Chilled water flow from the shell side of the intermediate heat exchanger to each area fan coil in the HVAC Supply Air System is automatically routed through or bypasses the cooling coils as needed, based on individual area temperatures. Total flow is maintained constant by a bypass around the cooling coil from the supply header back to the return header using a modulated three-way valve.
- **MOX Fuel Fabrication Building Isolation** –The chilled water penetrations into and out of the MOX Fuel Fabrication Building are provided with redundant seismically operated isolating valves to prevent flooding.

11.9.1.1.5 System Interfaces

The HVAC Chilled Water System interfaces with the following:

- Plant Water System – Provides makeup water to the external HVAC Chilled Water System cooling loop.
- Demineralized Water System – Provides makeup water to the internal HVAC Chilled Water System cooling loop.
- Normal Power Supply
- Instrument Air System – The Instrument Air System supplies the motive air to air operated valves.
- Supply Air System – The HVAC Chilled Water System provides the recirculated distribution system to supply (and return for re-chilling) chilled water to the main cooling coils and the individual room Fan/Coil Unit units for ventilation cooling.
- Seismic Detectors – Provide a signal to the redundant isolation valves to automatically isolate the chilled water penetrations into and out of the MOX Fuel Fabrication Building during a seismic event.

11.9.1.2 Process Chilled Water System

11.9.1.2.1 Function

The function of the Process Chilled Water (CHP) System is to provide chilled water to multiple intermediate heat exchangers to provide internal loop cooling for the AP process systems, pelletizers, and sintering furnaces in the MP Area. The intermediate heat exchangers provide cooling water at various temperatures for the system interfaces identified below. The total process operational cooling load is 125 tons.

11.9.1.2.2 Description

The Process Chilled Water System consists of an external cooling loop to provide cooling water to multiple intermediate heat exchangers. These heat exchanges provide cooling water at specified operating temperatures to multiple internal cooling loops to AP process systems. They also provide cooling water to the pelletizers, sintering furnaces, and the condenser for the secondary steam loop condensate tank vent in the MP Area.

The external cooling loop consists of multiple, parallel, air-cooled chillers; multiple, parallel centrifugal circulating pumps located outside of the MOX Fuel Fabrication Building; and intermediate heat exchangers that are located in both the MP and AP Areas. The external loop will contain a small amount of glycol for freeze protection. The intermediate heat exchangers maintain separation between the external and internal cooling loops for areas where moderation control is required to prevent criticality and to prevent the potential spread of contamination from the process to the external cooling loop and the outside environment.

The internal cooling loops each consist of the shell side of the intermediate heat exchanger, circulating pumps, and the tube side of each process-cooling coil. Cooled intermediate heat exchanger shell-side water is routed to the inlets of multiple, parallel, process cooling coils to provide cooling to selected portions of the process stream. The parallel intermediate heat exchangers and internal loops provide cooling water for the following process requirements (normal to maximum):

- 8°C to 14°C for the Purification Cycle, Oxalic Precipitation and Oxidation Unit, Oxalic Mother Liquor Recovery Unit, Solvent Recovery Cycle, and Offgas Treatment Unit
- 10°C to 15°C for the Dissolution Unit
- 12°C to 14°C for the Silver Recovery Unit
- 25°C to 35°C for the Acid Recovery Unit and Oxalic Mother Liquor Recovery Unit
- 30°C to 50°C for the Oxalic Mother Liquor Recovery Unit.

Process temperature control is maintained by the size of the associated intermediate heat exchanger and by controlling the chilled water flow.

Piping is designed for design basis seismic conditions and takes into account thermal and pressure stresses, erosion, and corrosion.

The primary means of detecting contaminated fluid in-leakage from the process systems into the Process Chilled Water system internal cooling loops is by radiation detection in a continuous bypass flowpath in the common chilled water return line of each internal cooling loop. The chilled water return lines of each internal cooling loop is continuously monitored with radiation alarms in the main control room.

Figure 11.9-2 provides a schematic of the Process Chilled Water System.

11.9.1.2.3 Major Components

The major components of the Process Chilled Water System are as follows:

- **Process Chillers** –Multiple, parallel, air-cooled process chillers are used to supply the required chilled water to the air compressors and process cooling coils. The maximum process-cooling load is approximately 125 tons, allowing at least one chiller to be in standby or maintenance mode for reliability. The chillers are placed in service and loaded as operationally required by automatic load controllers sensing chiller outlet temperature. These chillers are located outside of the MOX Fuel Fabrication Building.
- **Circulating Pumps** – Multiple, parallel sets of centrifugal circulating pumps are provided for the external cooling loop and each of the internal cooling loops.
- **Intermediate Heat Exchangers** – These heat exchangers provide cooling water to process cooling coils while maintaining separation from areas requiring moderation control to prevent criticality and the potential spread of contamination to the outside environment via the external cooling loop.

11.9.1.2.4 Control Concepts

The Process Chilled Water System is controlled from the Utilities Control Room (B-319) or the Remote Auxiliary Utilities Control Room (D-301) as described in Section 11.6.2.5. The control concepts for the Process Chilled Water System are as follows:

- **Process Chiller Operation and Load Control** – The process chillers are placed in service and loaded as operationally required by automatic load controllers sensing chiller outlet temperature.
- **MOX Fuel Fabrication Building Isolation** – The chilled water penetrations into and out of the MOX Fuel Fabrication Building are provided with redundant seismically operated isolating valves to prevent flooding.

11.9.1.2.5 System Interfaces

The CHP System interfaces with the following structures, systems, and components (SSCs). These interfaces are either supplied to CHP components for support and operation of the CHP System or are supplied from the CHP System for AP, MP, Utility or Reagent Systems process and component cooling.

ELECTRICAL POWER - CHP System components interface with the Electrical Distribution System for electrical power as the motive force to operate major components and as control power for instrumentation and controls.

INSTRUMENT AIR (IAS) SYSTEM - Instrument Air is supplied to the CHP System air operated valves as motive air for valve operation.

DEMINERALIZED WATER (DMW) SYSTEM - The Demineralized Water System (DMW) supplies demineralized water to the CHP external and internal cooling loops surge tanks for initial fill, refill after maintenance, and for make-up during normal operation. Make-up is initiated remotely by the Operators based on level instrument on each surge tank.

SEISMIC DETECTORS - which provide a signal to the redundant isolation valves to automatically isolate the chilled water penetrations into and out of the MOX Fuel Fabrication Building during a seismic event.

Process chilled water provides cooling to the following users:

- Vacuum Radiation Monitoring (VRM) System
- Process Steam & Condensate (SPS) System
- Hydrazine (RHZ) System
- Precipitation, Filtration And Calcination (KCA) System
- Oxalic Acid Recovery (KCD) System
- Plutonium Dissolution (KDB) System
- Uranium Dissolution (KDC) System
- Purification Cycle (KPA) System
- Solvent Recovery (KPB) System
- Acid Recovery (KPC) System
- Waste Collection & Transfer (KWD) System
- MOX Process Components (Sintering Furnaces and Pelletizing unit)
- Aqueous Polishing and MOX Process Laboratory Testing Systems.

11.9.1.3 Demineralized Water System

11.9.1.3.1 Function

The function of the Demineralized Water System is to supply demineralized water to process equipment and utility systems. The Demineralized Water System receives, stores, and transfers pressurized and gravity-fed (i.e., unpressurized) demineralized water to process equipment and utility systems for use in reagent preparation, solutions dilution, internal loop filling, humidification of sintering gas, general laboratory use, sintering furnaces, and miscellaneous process purposes.

11.9.1.3.2 Description

Demineralized water is supplied to the MOX Fuel Fabrication Building by SRS and is stored in a local Demineralized Water System storage tank for onsite usage. Transfer pumps send

demineralized water to the AP Area through the Reagent Processing Building Demineralized Water System break pot in the Reagent Processing Building to provide a constant gravity head to various Reagent Processing Building users. The pumps also supply pressurized demineralized water for general laboratory use, for miscellaneous rinsing, and for filling the internal loops of the HVAC and Process Chilled Water Systems and the Process Hot Water System loops.

The buffer tank for the AP Area Demineralized Water System provides storage capacity for users in the AP Area. This tank is equipped with a level control system similar to the level control on the storage tank. The pumps for the AP Area Demineralized Water System recirculate the demineralized water through the break pot. The break pot is used to supply the atmospheric pressure users in the AP Area.

Figure 11.9-3 provides a schematic of the Demineralized Water System.

11.9.1.3.3 Major Components

The major components of the Demineralized Water System are as follows:

- **Demineralized Water System Storage Tank** – The Demineralized Water System storage tank is a storage tank for the Reagent Processing Building that receives and stores demineralized water from SRS and provides the net positive suction head for the transfer pumps. Storage capacity includes providing enough demineralized water for buffer tank initial fill and makeup for the HVAC Chilled Water System, Process Chilled Water System, Process Hot Water System, and AP Area Demineralized Water System, as well as for general laboratory usage and miscellaneous rinsing.
- **Transfer Pumps** – Parallel pumps in the Reagent Processing Building Demineralized Water System supply pressurized demineralized water to the various users and recirculate demineralized water through the Reagent Processing Building break pot. Pumps in the AP Area Demineralized Water System recirculate demineralized water through AP Area break pots.
- **Buffer Tank** – The AP Area buffer tank is used to supply users in the AP Area. Buffer tank refill is controlled by a level control system.
- **Break Pots** – Reagent Processing Building and AP Area break pots are used to supply atmospheric pressure users in the Reagent Processing Building and AP Area, respectively. To maintain a constant head for the users at all times, demineralized water is continuously recirculated through the break pots using the respective transfer pumps.

11.9.1.3.4 Control Concepts

An operator will operate and control the Demineralized Water system (DMW) from a monitor in the main control room, and a local operator in the process area can monitor the DMW system's operation from local control panel(s). The local operator can manually perform limited operations (e.g., loading, pouring, etc).

The control concepts for the Demineralized Water System are as follows:

- **Storage and Buffer Tank Level Control** – To maintain adequate supply in the storage and buffer tanks, each tank contains high- and low-level instrumentation to automatically open or close the makeup valves, as needed.
- **MOX Fuel Fabrication Building Isolation** – The demineralized water penetrations into the MOX Fuel Fabrication Building are provided with double isolating valves to automatically isolate during a seismic event.

11.9.1.3.5 System Interfaces

The Demineralized Water System interfaces with SRS for supply. The Demineralized Water System interfaces with the various Reagent Systems as follows:

- Nitric Acid System
- Hydroxylamine Nitrate System
- Oxalic Acid System
- Silver Nitrate System
- Sodium Hydroxide System
- Hydrazine System
- Hydrogen Peroxide System.

The Demineralized Water System interfaces with the following Mechanical Utility Systems for loop filling and makeup:

- Process Chilled Water System
- HVAC Chilled Water System
- Process Hot Water System.

The Demineralized Water System interfaces with the following process systems in the AP Area:

- KPC (Acid Recovery)
- KDB (Dissolution)

The Demineralized Water System interfaces with the following miscellaneous equipment:

- Sintering furnace where it is used for humidification of the scavenging gas and emergency cooling
- Laboratory for general laboratory use
- Normal Power Supply
- Seismic detectors, which provide a signal to the redundant isolation valves to automatically isolate the demineralized water system penetrations into and out of the MOX Fuel Fabrication Building during a seismic event.

11.9.1.4 Process Hot Water System

11.9.1.4.1 Function

The purpose of the Process Hot Water System is to supply hot water to process equipment. The function of the Process Hot Water (HWS) System is to heat demineralized water and to supply it as Hot Water and Superheated Water to various process Heat Exchangers in the following Aqueous Polishing units: Oxalic Precipitation Oxidation (KCA) Unit, Purification Cycle (KPA) Unit, and Acid Recovery (KPC) Unit.

11.9.1.4.2 Description

The Process Hot Water System is a closed-loop circulating system that supplies hot water to process equipment in the KPA, KPC and KCA Units.

Hot Water to KPA and KCA - Demineralized water for supply and make-up is supplied to HWS from the Demineralized Water (DMW) System. The demineralized water enters the hot water expansion tank and feeds directly into the return line from the HWS users. This hot water return is heated by an electric water heater and is then circulated by hot water pumps to the various users in KCA and KPA.

Superheated Water to KPC - Demineralized water for supply and make-up is routed to the Superheated Water Expansion Tank which supplies make-up water into the superheated water users return line. A chemical injection skid is utilized to inject water treatment chemicals as needed. The water is circulated by the superheated water pumps and is then heated by a steam heat exchanger before distribution KPC.

The primary means of detecting contaminated fluid in-leakage from the process systems into either of the HWS heating loops is by radiation detection in a continuous bypass flow-path in the return lines for each internal heating loop. The water return lines are continuously monitored with radiation alarms in the main control room.

Figure 11.9-4 provides a schematic of the Process Hot Water System, and Figure 11.9-5 provides a schematic of the Process Steam System.

11.9.1.4.3 Major Components

The major components of the Process Hot Water System are as follows:

- **Expansion Tank** – This common storage tank receives and stores demineralized water supplied by SRS, provides the suction supply and net positive suction head for the circulating pumps, and serves as an expansion volume to accommodate system temperature changes. Tank capacity is based on suction supply and net positive suction head requirements and the expected volume expansion and contraction of system water to accommodate temperature changes. The expansion tank is initially filled from the Demineralized Water System and is refilled as necessary by level-control instrumentation.

- **Circulating Pumps** – These parallel, 100% capacity centrifugal pumps circulate hot water to process equipment in the Solvent Recovery Cycle, Purification Cycle, and Oxalic Precipitation and Oxidation Unit and then return it to the pump suctions.
- **Heat Exchanger** – This shell and tube heat exchanger is located at the discharge of the circulating pumps. Demineralized water from the Process Hot Water System is routed through the tube side of the heat exchanger where it is heated by the Process Steam System on the shell side. Condensate is collected and drained to the Process Condensate System. Throttling process steam flow (shell-side inlet) based on the temperature of the Process Hot Water System outlet controls the Process Hot Water System (tube-side) outlet temperature.

11.9.1.4.4 Control Concepts

The control concepts for the Process Hot Water System are as follows:

- **Expansion Tank Level Control** – To maintain adequate water supply in the expansion tank, high- and low-level instrumentation automatically opens or closes the Demineralized Water System makeup valve, as needed.
- **Process Hot Water Temperature Control** – Process Hot Water System temperature (heat exchanger tube-side outlet) is maintained and controlled by throttling process steam to the heat exchanger shell-side inlet based on the Process Hot Water System temperature measured at the heat exchanger tube-side outlet.
- **Process Hot Water Flow Control** – Hot water is distributed to each process-heating coil, as needed, based on individual process requirements. There is a bypass from the pump discharge (supply header) back to the return header for any excess capacity.

11.9.1.4.5 System Interfaces

The Process Hot Water System interfaces with the following:

- Demineralized Water (DMW)
- Solvent Recovery (KPC)
- Purification Cycle (KPA)
- Process Steam and Condensate (SPS)
- Oxalic Precipitation Oxidation (KCA)
- Process Off-Gas Treatment (KWD)
- Waste Collection & Transfer (KWD)
- Superheated water connections to KWD
- Instrument Air
- Normal Power Supply.

11.9.1.5 Process Steam System

11.9.1.5.1 Function

The function of the Process Steam System is to transfer and regulate the primary steam supplied by SRS and the Acid Recovery Unit secondary steam to the users in the AP Area. The primary steam users are the KPA and KPC steam jets and to KPA, KXA and KPB hot water heat exchangers. A secondary steam loop is used for the KCD and KPC evaporators.

In addition, the Process Condensate produced from the KPA, KCA and KPB hot water heat exchangers and from the secondary steam loop vaporizers is collected, cooled and transferred to the site storm drain system.

11.9.1.5.2 Description

The Process Steam System provides regulated primary and secondary steam that is supplied to process equipment in the HWS, KPA, KPC, KDB, and KCD Units. In addition, condensate is returned and cooled for discharge to the site storm drain.

Primary Steam - Steam is furnished from the SRS host site. The primary steam is reduced through a pressure control valve for the primary steam header. Steam is further reduced to provide for the occasional use of KPA and KPC steam jets, and is reduced more for use in the KPA, KCA, and KPB hot water exchangers, as well as for the secondary steam loop vaporizer.

Secondary Steam - Provides heating steam to the secondary steam vaporizers. Steam produced in the secondary steam vaporizers is supplied through a pressure reducer for use in the KCD and KPC evaporators.

Process Condensate - This consists of the Condensate Drain Tank and the Condensate Drain Pumps. The drain tank collects the condensate produced from the KPA, KCA, and KPB hot water exchangers and secondary steam loop vaporizers. The drain pumps take their suction from the drain tank and transfer the condensate to the Site Storm Drain System.

The primary means of detecting contaminated fluid in-leakage from the process systems into the condensate returns is by radiation detection in a continuous bypass flow-path in these return lines. The return lines are continuously monitored with radiation alarms in the main control room.

Figure 11.9-5 provides a schematic of the Process Steam and Process Condensate Systems.

11.9.1.5.3 Major Components

The major components of the Process Steam System are as follows:

- Secondary steam vaporizer
- Secondary condensate pumps
- Secondary condensate vent condenser
- Secondary condensate tank
- Primary condensate tank
- Primary condensate vent condenser
- Primary condensate pumps
- Primary condensate cooler
- Condensate Gamma Monitors

11.9.1.5.4 Control Concepts

Normal Operation – The Process Steam and Condensate (SPS) System normally operates permanently. The process is stopped if the equipment temperature is not compliant.

Emergency and Upset Operation – There are no emergency operating modes for the SPS System.

During an upset condition, the system is out of service.

On loss of normal power, the low temperatures require shutting down both the SPS System and the user processes dependent upon the SPS.

On loss of instrument air, all of the air-operated valves fail closed.

All pumps stop and valves close if the PLC fails resulting in the SPS and user processes being stopped until the problem is resolved.

- **MOX Fuel Fabrication Building Isolation** – The Process Steam and Condensate return penetrations into the MOX Fuel Fabrication Building are provided with double shutoff, isolating valves to automatically isolate during a seismic event.

11.9.1.5.5 System Interfaces

The Process Steam System interfaces with the following:

- Chilled Process Water
- Decontamination (DCS)
- Demineralized Water (DMW)
- Hot Water System (HWS)
- HVAC air supply to drain pots SPS-TK2660 and TK2670.
- Oxalic Mother Liquor Recovery (KCD)
- Dissolution (KDB)
- Purification/Oxidation (KPA)
- Acid Recovery (KPC)
- Waste Collection and Transfer (KWD)

- Process Off-Gas Treatment (KWG)
- Main Stack
- Primary Steam
- Electrical & I&C:
- Storm Drain
- Instrument Air.

11.9.1.6 Plant Water System

11.9.1.6.1 Function

The function of the Plant Water System is to supply industrial-grade water for general usage that does not require demineralized water. The Plant Water System supplies industrial-grade water for initial fill and makeup of the chilled water external loops, drainage siphon traps, HVAC ventilation humidifiers, air compressor aftercoolers, and general laboratory usage.

11.9.1.6.2 Description

The Plant Water System consists of a single supply header that supplies industrial-grade water from SRS to utility, MP, and AP users. The Plant Water System will also be used to provide cooling for the aftercoolers in the discharge of the air compressors.

Initial fill and makeup of the chiller external loops and the HVAC ventilation humidifiers are controlled, as required, by level-control instrumentation.

Usage for drainage siphon traps and general laboratory usage is controlled manually, as required.

Figure 11.9-6 provides a schematic of the Plant Water System.

11.9.1.6.3 Major Components

The Plant Water System is a distribution system only with no major equipment.

11.9.1.6.4 Control Concepts

The control concepts for the Plant Water System are as follows:

- **Level Control** – To maintain adequate supplies in the chilled water surge tanks and HVAC ventilation humidifiers, high- and low-level instrumentation automatically opens or closes the Plant Water System makeup valves, as needed.
- **MOX Fuel Fabrication Building Isolation** – The plant water penetrations into the MOX Fuel Fabrication Building are provided with double isolating valves to automatically isolate during a seismic event.

11.9.1.6.5 System Interfaces

The Plant Water System interfaces with the following:

- SRS, which is the supplier of the plant water
- Chilled water systems (HVAC Chilled Water System and Process Chilled Water System) for external loop fill
- Provides water for drainage siphon traps, ventilation humidifiers, and general laboratory usage
- Service Air System air compressors for aftercooling
- Normal Power Supply
- Seismic detectors, which provide a signal to automatically isolate the plant water fluid penetrations into and out of the MOX Fuel Fabrication Building during a seismic event.

11.9.1.7 Emergency Diesel Generator Fuel Oil System

11.9.1.7.1 Function

The function of the Emergency Diesel Generator Fuel Oil System is to receive, store, and transfer fuel oil to the emergency diesel generators used to provide power to principal SSCs. Exhaust systems provided by the manufacturer of the generators remove fumes and dampen noise produced by diesel fuel combustion.

11.9.1.7.2 Description

The Emergency Diesel Generator Fuel Oil System receives, samples, stores, and supplies fuel oil to the emergency diesel generators. The Emergency Diesel Generator Fuel Oil System consists of a common fuel oil storage tank with separate fuel oil supply lines to each emergency diesel generator. Each supply line contains a day tank, a transfer pump with strainer, discharge check valves and pressure relief valves, maintenance isolation valves, a common in-line fuel filter, and instrumentation to monitor and control the fuel oil supply. These components will be installed within a protected enclosure located adjacent to the emergency diesel generator. The exhaust system consists of individual silencers and associated piping for each emergency diesel generator in accordance with the manufacturer's standard design.

The Emergency Diesel Generator Fuel Oil System consists of a bulk storage tank sized for seven days' continuous usage for one emergency diesel generator operating at full load plus an operational margin to allow periodic testing, dual pumps (one standby), suction strainers, dual cartridge-type filters on each transfer pump discharge, piping, valves, and controls. These components will be installed within a protected below-grade concrete vault located adjacent to the Emergency Diesel Generator Building. Both the vault and the Emergency Diesel Generator Building are designed to survive natural phenomena hazards such as earthquakes, floods, and tornadoes.

The Emergency Diesel Generator Fuel Oil Storage System (EGF) has been defined to include the fuel oil storage and transfer components and will exclude the diesel engine exhaust components. The diesel engine exhaust will be a component of the generator set that is included in the Emergency AC Power System (Section 11.5.7.1) as a vendor provided packaged unit.

As stated in Section 11.5.7.1, "...the Emergency Diesel Generator sets will be designed and qualified in accordance with IEEE Std 387 (1995)," which includes the engine exhaust. The engine exhaust will be provided as part of the generator set vendor package and will conform to NFPA-37 (1998) and NFPA-110 (1999). The function of the engine exhaust is to collect and remove exhaust as quickly and silently as possible. The primary design consideration is to minimize engine cylinder backpressure since exhaust gas restrictions can cause loss of engine performance and increase exhaust gas temperatures.

Some operator occupation of the generator set compartment may be necessary during engine operation but is not expected to be extensive since the EDG Control Panel, switchgear and motor control centers are located in the Switchgear Rooms. The engine exhaust system will be equipped with a silencer capable of noise attenuation to acceptable OSHA levels for personnel hearing protection in an industrial environment. In addition, the generator set is located in a separate, dedicated compartment of the Emergency Generator Building.

Heat generated by the exhaust system will be routed from the exhaust manifold into the compartment overhead (and eventually outside) by the exhaust piping and will be provided with heat shields at potentially accessible areas. Primary heat removal from the EDG building will be provided by the Emergency Diesel Generator Building HVAC System (HVD) as described in Section 11.4.3.

Since the generator set is located in a separate, dedicated compartment with limited operator occupation during engine operation, outside air ventilation is provided to this area, and the inlet source is determined by engine operation. When the engine is not operating, roof ventilators controlled by local thermostats and interlocked with the diesel provide outside air ventilation. Upon engine start, the roof ventilators are de-energized and dampers (also interlocked with the diesel) open to provide a flow path for combustion and cooling air for the diesel. During engine operation, outside air is pulled into the generator room by the engine air intake system and by the engine-driven radiator fan. After passing through the radiator, the air is discharged to the back to the outside environment.

Fuel Oil Filtration

The MFFF Emergency Diesel Fuel Oil Storage System (EGF) has been designed to comply with ANSI / ANS 59-51-1997. The current configuration of the EGF System consists of two independent sub-systems, each capable of fuel receipt, long-term storage, and the ability to transfer an adequate supply of fuel oil to support its associated Emergency Diesel Generator operating at 100% load for seven days. Each sub-system consists of a main storage tank (located in an underground vault), a transfer system, an immediate use day tank, and a fuel purification system.

Fuel filtration and purification will be performed in five separate locations: (1) on receipt of new fuel from the remote fill station, (2) at the transfer pump suction, (3) in a by-pass flow purification system, (4) on delivery to the engine between the day tank and engine, and (5) at the engine itself. The fuel filter on the engine is considered as a component of the generator set and is not included in the EGF System.

The main storage tank fill line from the remote fill station will contain a multi-element, locally differential pressure instrumented (PDIs) inlet filter rated 2 μ to filter new fuel on receipt. The criteria used for this filter and its rating is to prevent coagulated fuel and/or particulate contaminants from entering the storage tank assuming a low-pressure flow of 80-100 gpm.

The transfer system includes the transfer piping (supply and return) between the main storage tank and the immediate use day tank. Motive force will be provided by a rotary screw positive displacement transfer pump with a differential pressure instrumented (PDIS), switchable dual-basket suction strainer with automatic transfer valve and will have a stainless steel mesh rating for 100% particulate removal at 45 μ and 98% particulate removal at 17 μ. The criteria used to size and rate of the transfer pump suction strainer is to prevent abrasive particulates from entering (and eventually damaging) the transfer pump based design flowrate and on pump manufacturer recommendations for pump running clearances. The suction strainer mesh rating for a typical rotary screw positive transfer pump is approximately 100 mesh (165 μ). The 45 μ strainer chosen is to ensure adequate protection for the close running tolerances of a typical rotary screw positive displacement pump. The design flowrate for the EGF System transfer pump (transfer fuel from the main storage tank to the immediate use day tank) is 25 gpm.

The immediate use day tank includes an engine supply line with differential pressure instrumented (PDIS), switchable dual-element basket strainer with automatic transfer valve. The filter media will be stainless steel mesh with an estimated rating at 100% particulate removal at 18 μ and 98% particulate removal at 5 μ. The fuel pump on the engine and not the transfer pump on the EGF System provide motive force. The criteria used to size and rate the engine supply strainer is to prevent overloading of the engine mounted fuel filter at the fuel inlet flowrate. The rating of a typical engine mounted fuel filter is approximately 5 μ based on engine requirements and will be supplied by the engine vendor as a component of the generator set. Typical supply flowrate is approximately 330 gph with approximately 72 gph used for combustion at 100% load and 258 gph returned to the Day Tank. These values are considered typical for this size EDG.

The purification system is a self-contained vendor package, which contains particulate filters and water-removal equipment and is connected to the transfer system supply and return lines. The Transfer Pump will provide the motive force to the purification skid with the purified fuel routed back to the Main Storage Tank. Periodic recirculation and purification of the EGF System will be a routine activity to assist in maintaining the diesel fuel in good condition. During recirculation, a portion (approximately 15 to 20 gpm) of the 25 gpm transfer flow between the Main Storage Tank and Day Tank will by-pass the Day Tank and be routed through the purification package. The remainder of the recirculation flow (approximately 5 to 10 gpm) will be routed to the Day Tank and will ensure that adequate supply can be delivered as make-up to the Day Tank in the event of an engine start during recirculation. Fuel consumption rate @ 100% load = 72.2 gph = 1.2 gpm. Day Tank overflow is returned to the Main Storage Tank. Recirculation for one shift (12 hours) will turnover, filter and purify the entire volume of the Main Storage and Day Tanks at least one time. Particulate filtration will be approximately 1 to 5 μ to remove abrasive particles that could damage the transfer pump and/or engine. Water removal equipment is typically coalescing filters to removal suspended water introduced into storage tanks by condensation from tank vents. After recirculation, all of the transfer flow will be routed to the Day Tank.

The No. 2 diesel fuel oil is supplied to the day tanks for each generator within the Emergency Diesel Generator Building. Each fuel oil day tank is sized for a maximum storage capacity of 660 gal (2,500 L) in accordance with NFPA 37 Section 5-3.2.

Figure 11.9-7 provides a schematic of Emergency Diesel Generator Fuel Oil System.

11.9.1.7.3 Major Components

The major components of the Emergency Diesel Generator Fuel Oil System are as follows:

- **Fuel Oil Storage Tanks** – Each emergency diesel generator is provided with an individual fuel oil storage tank. These storage tanks receive, store, and supply fuel oil for the emergency diesel generators. The fuel oil storage tank is a horizontal, cylindrical tank located in an individual compartment of a protected enclosure. The fuel oil storage tank has a minimum working capacity based on providing a continuous fuel supply for seven days of full load operation for one emergency diesel generator plus an additional operational margin to allow for periodic testing of each emergency diesel generator.
- **Fuel Oil Day Tanks** – Each emergency diesel generator is provided with an individual, immediate-use fuel oil day tank supplied from the its fuel oil storage tank via individual supply lines and transfer pumps. Both tanks are located in individual diked areas of the Emergency Diesel Generator Building near their associated diesel generators. Each fuel oil day tank is sized for a maximum storage capacity of 660 gal (2,500 L) in accordance with NFPA 37 Section 5-3.2.
- **Fuel Oil Transfer Pumps** – Each emergency diesel generator is provided with an individual, dedicated fuel oil transfer pump to transfer fuel oil from the common fuel oil storage tank to each diesel via its fuel oil day tank. Each pump is a 100% capacity, positive displacement, screw pump capable of delivering at least the full load fuel requirements of an emergency diesel generator plus an excess operational capacity margin to allow fill or pump-down within a reasonable amount of time. These pumps are located in individual compartments of the protected fuel oil storage tank enclosure.

11.9.1.7.4 Control Concepts

The control concepts for the Emergency Diesel Generator Fuel Oil System are as follows:

- **Fuel Oil Day Tank Level Control** – To maintain correct levels, each fuel oil day tank contains high- and low-level instrumentation to automatically start or stop the associated fuel oil transfer pump, as needed.
- **Level Indication/Alarms** – The fuel oil storage tank and each day tank contain level instrumentation and alarms to monitor high or low tank levels locally in the Emergency Diesel Generator Building, in the A and B Emergency Control Rooms, and at the remote fill station.

11.9.1.7.5 System Interfaces

The Emergency Fuel System interfaces with the following:

- Emergency Diesel Generators – The Emergency Diesel Generator Fuel Oil System supplies fuel oil to the generator fuel inlet.
- Emergency Electrical Power Supply.

11.9.1.8 Standby Diesel Generator Fuel Oil System

11.9.1.8.1 Function

The function of the Standby Diesel Generator Fuel Oil System is to receive, sample, store, and transfer fuel oil to the standby diesel generators. The Standby Diesel Generator Fuel Oil System supplies diesel fuel oil to the standby generators that are used to provide the onsite power source for the major electrical loads in the event of loss of primary power. An exhaust system for each generator removes exhaust fumes and dampens noise produced by fuel combustion and is included as part of the manufacturer's supply.

11.9.1.8.2 Description

The Standby Diesel Generator Fuel Oil System receives, samples, stores, and supplies fuel oil to the standby diesel generators. The Standby Diesel Generator Fuel Oil System consists of a buried double-walled bulk storage tank, dual pumps, suction strainers, dual cartridge-type filters, piping, valves, and controls. The bulk storage tank is sized to supply fuel oil for 24 hours of continuous usage for both standby diesel generators operating at full load plus an operational margin to allow periodic testing. The No. 2 fuel oil is supplied to the day tanks for each generator within the Standby Diesel Generator Building. Each fuel oil day tank is sized for a maximum storage capacity of 660 gal (2,500 L) in accordance with NFPA 37 Section 5-3.2 or a maximum of 1,320 gal (5,000 L) total (for both day tanks).

Independent, redundant, fuel oil transfer pumps and associated fuel oil lines are used to prevent single failures from causing the loss of the standby electrical power supply.

Figure 11.9-8 provides a schematic of Standby Diesel Generator Fuel Oil System.

11.9.1.8.3 Major Components

The major components of the Standby Diesel Generator Fuel Oil System are as follows:

- **Fuel Oil Storage Tank** – This common, direct buried, underground storage tank receives, stores, and supplies fuel oil for both standby diesel generators. The fuel oil storage tank has a minimum working capacity based on providing fuel for 24 hours of full load operation for both standby diesel generators plus an additional operational margin to allow periodic testing.
- **Fuel Oil Day Tanks** – Each standby diesel generator is provided with an individual immediate-use fuel oil day tank supplied from the common fuel oil storage tank via individual supply lines and transfer pumps. Both tanks are located in individual diked areas of the Standby Diesel Generator Building near their associated diesel generators. Each day tank is sized for the maximum allowable (660 gal [2,500 L]) in accordance with NFPA 37 Section 5-3.2.

- **Fuel Oil Transfer Pumps** – Each standby diesel generator is provided with an individual, dedicated, fuel oil transfer pump to move fuel oil from the common fuel oil storage tank to each fuel oil day tank. Each pump is a 100% capacity, positive displacement, screw pump capable of delivering the full load fuel requirements of one standby diesel generator plus an excess operational capacity margin to allow fill or pump-down within a reasonable amount of time. These pumps are located on an aboveground pump pad near the fuel oil storage tank.

11.9.1.8.4 Control Concepts

The control concepts for the Standby Diesel Generator Fuel Oil System are as follows:

- **Fuel Oil Day Tank Level Control** – To maintain correct levels, each fuel oil day tank contains high- and low-level instrumentation to automatically start or stop the associated fuel oil supply pump.
- **Level Indication/Alarms** – The fuel oil storage tank and each day tank contain level instrumentation and alarms to monitor high or low tank levels locally in the Standby Diesel Generator Building, in the A and B Emergency Control Rooms, and at the remote fill station.

No control concepts are associated with the exhaust portion of the Standby Diesel Generator Fuel Oil System.

11.9.1.8.5 System Interfaces

The Standby Diesel Generator Fuel Oil System interfaces with the following:

- Standby Diesel Generators – The Standby Diesel Generator Fuel Oil System supplies fuel oil to the generator fuel inlet.
- Standby Power Supply.

11.9.1.9 Service Air System

11.9.1.9.1 Function

The primary function of the Service Air System is to supply makeup to the Instrument Air System. It is also used to supply pressurized air to the MOX Fuel Fabrication Building service air headers for maintenance and utility operations. The Service Air System consists of skid-mounted compressors, oil separators, aftercoolers, and moisture separators. The service air passes through prefilters and after-filters prior to being stored in a service air receiver tank. Service air is used for general air service, fuel assembly cleaning, rod inspection, process ventilation columns, airlift ejectors, miscellaneous process users, and the supply for the Instrument Air System.

11.9.1.9.2 Description

The Service Air System consists of multiple, parallel, service air compressors, filters, a receiving tank, and the service air header to store and supply pressurized air for general air service (e.g., tool operation, laboratory usage), process equipment and functions, and the inlet supply for the Instrument Air System. Service air is supplied and filtered to 25 μ for miscellaneous usage and to 1 μ for column pulsation (1μ = 1 micron = 1E-06 meters).

Figure 11.9-9 provides a schematic of the Service Air System.

11.9.1.9.3 Major Components

The major components of the Service Air System are as follows:

- **Service Air Compressors** – Multiple air compressors receive and compress outside air to be stored in the service air receivers. They are located outside of the MOX Fuel Fabrication Building.
- **Filters** – Particulates greater than 25 μ will be removed from miscellaneous service air and greater than 1 μ for column pulsation and instrument air.
- **Receivers/Buffer Tanks** – Multiple tanks in both Service Air Systems store pressurized air.

11.9.1.9.4 Control Concepts

The control concepts for the Service Air System are as follows:

- **Service Air Compressor Operation and Load Control** – The compressors are placed in service and loaded, as needed, by automatic load controllers sensing header and receiver pressure.
- **MOX Fuel Fabrication Building Isolation** – The Service Air penetrations into the MOX Fuel Fabrication Building are provided with redundant isolating valves to automatically isolate during a seismic event.

11.9.1.9.5 System Interfaces

The Service Air System interfaces with the following:

- Instrument Air System – The Service Air System supplies makeup air to the Instrument Air System.
- Seismic detectors, which provide a signal to automatically isolate the Service Air penetrations into the MOX Fuel Fabrication Building during a seismic event.
- Standby power
- Emergency electrical power for emergency scavenging.

11.9.1.10 Instrument Air System

11.9.1.10.1 Function

The functions of the Instrument Air System include the following:

Supply instrument quality air (as defined by ANSI/ISA-S7.0.01-1996, "Quality Standard for Instrument Air) or better for the following:

- Instrument air (-40°C) with buffer storage for air-operated valves and HVAC dampers
- Ventilation and cooling air for gloveboxes and the pelletizing press bellows
- Normal bubbling / scavenging air for level measurement and hydrogen dilution during normal operation
- Independent emergency scavenging air for plutonium vessels to prevent radiolysis-related hydrogen buildup following an earthquake, loss of normal instrument air, or loss of power
- Super dry -80°C at 1 bar (-112°F at 14.5 psia) process air for ventilation and cooling of the AP powder gloveboxes
- Nitrogen System backup supply for glovebox scavenging.

The "Scavenging Air System" is an independent subsystem of the Instrument Air System. The term "scavenging air" as used here is for air performing a "purge" or "dilution" of any radiolysis generated hydrogen in a vessel vapor space and not a chemical reaction (such as excess hydrogen scavenging or combining with free oxygen). During normal operation, the Instrument Air System (-40°C dew point) provides bubbling air to level instrumentation in Process vessels (including those that contain Pu). During normal operation, this level instrumentation bubbling air also functions as the scavenging air for each vessel. During an emergency or loss of normal Instrument Air, the Emergency Scavenging Air subsystem portion of the Instrument Air System fulfills the scavenging air function to all vessels containing Pu that are undergoing radiolysis to form hydrogen. This subsystem is completely independent of the normal bubbling air for the Instrument Air System. Each train of Scavenging Air contains sufficient air to maintain the hydrogen concentration in the vapor spaces of supplied vessels ≤ 1% Hydrogen for seven days.

The Emergency Scavenging Air System is the portion of the Instrument Air System that is identified as a principal SSC. The Emergency Scavenging Air System supplies air to vessels containing plutonium to prevent radiolysis-related hydrogen buildup following a seismic event, loss of normal instrument air, or loss of power. See section 11.9.5 for a description of the design basis for this system.

Instrument and process air is produced by passing service air through air dryers prior to being stored in an instrument air receiver tank. The instrument air will have a dew point equal to, or lower than, -40°F (-40°C). The capacity of the instrument air receiver tank will be based on operation of selected equipment in the event of a loss of power to the compressors. Distribution piping supplies compressed air at a steady pressure to the required services within the facility. The design of the instrument air system and the structures, systems and components that rely on the instrument air system take into account lessons learned from industry experience (such as

NRC IN letters 95-53, 92-67, 88-24, 88-43 and 87-28). A portion of the -40°F (-40°C) instrument air will be dried further to obtain super dry process air with a dew point of less than -80°C. The super dry process air is used for various instruments and for all air being supplied directly to the process stream in the AP Area. The air is also used for glovebox applications.

11.9.1.10.2 Description

The Instrument Air System receives air supplied by the Service Air System at 7 bars (101.5 psia) and dries and filters it to a dew point of -40°C at 1 bar (-40°F at 14.5 psia) and 1 μ, respectively, for instrument and process functions. Instrument air is further dried to a dew point of -80°C at 1 bar (-112°F at 14.5 psia) and supplied at up to 4 bars (58 psia) and 1 μ filtration for scavenging AP gloveboxes and miscellaneous equipment, such as air lift pumps used for vessel mixing and material transport and to the air ejectors used for vessel vapor space evacuation.

The bubbling air that is used for level measurement in vessels also provides normal scavenging air to vessels containing compounds that undergo radiolysis to form hydrogen. If the normal bubbling air is lost, an Emergency Scavenging Air System is used. Although the Emergency Scavenging Air System is used to replace the normal scavenging air supply, it is not physically connected to the normal scavenging air supply (i.e., it has a separate nozzle to supply the vessel/tank).

An emergency seven-day supply of scavenging air for vessels requiring scavenging is supplied by redundant banks of compressed air cylinders, separate from the normal instrument air supply. Seven days is considered a reasonable period for restoration of the normal bubbling air supply for use in vessel scavenging following failure of the instrument air system. The emergency scavenging air system provides air to prevent radiolysis-related hydrogen buildup following a loss of the normal air supply.

The receiver buffer tanks provide air to facilitate a normal process shutdown following loss of the instrument air system.

The emergency scavenging air supply is automatically activated following a loss of the normal instrument air supply by opening one of two parallel, fail open, air operated valves. When the emergency scavenging air supply is in operation, the scavenging air header supply valve is automatically switched to the backup bank of cylinders upon low pressure at the outlet of the operating bank of cylinders. HEPA filters are provided in gas lines penetrating primary and secondary confinements, and the emergency scavenging air supply is seismically designed. Figure 11.9-10 provides a schematic of the Instrument Air System.

11.9.1.10.3 Major Components

The major components of the Instrument Air System are as follows:

- **Filters** – Particulates greater than 25 μ will be removed from miscellaneous service air and greater than 1 μ for column pulsation and instrument air.

- **Receivers/Buffer Tanks** – The Instrument Air System has a one hour capacity of the Receiver Tanks, which provide sufficient air for an orderly shutdown of process operations.
- **Air Dryers** – Air dryers receive air supplied by the Service Air System and dry it to a dew point of -40°C at 1 bar (-40°F at 14.5 psia) for instrument and process functions and then to -80°C at 1 bar (-112°F at 14.5 psia) for scavenging AP gloveboxes and miscellaneous equipment*.

*Miscellaneous equipment refers to the air lift pumps used for vessel mixing and material transport and to the air ejectors used for vessel vapor space evacuation.

11.9.1.10.4 Control Concepts

The control concepts for the Instrument Air System are as follows:

- **Instrument Air System Emergency Scavenging Air Pressure Control** – The Instrument Air System provides emergency scavenging air (from multiple, parallel bottle banks) for plutonium vessels to prevent radiolysis-related hydrogen buildup following an earthquake, loss of normal instrument air, or loss of power. Air supply reliability is ensured by providing each bank header with pressure instrumentation that will control a transfer valve to switch the air supply to the other header in case of low pressure.
- **MOX Fuel Fabrication Building Isolation** – The Instrument Air penetrations into the MOX Fuel Fabrication Building are provided with seismically operated redundant isolating valves to isolate the MOX Fuel Fabrication Building during a seismic event.

11.9.1.10.5 System Interfaces

The Instrument Air System interfaces with the following:

- Service Air System – The Instrument Air System receives makeup air from the Service Air System.
- Seismic Detectors – Provide a signal to automatically isolate the Instrument Air penetrations into the MOX Fuel Fabrication Building during a seismic event.
- Very High Depressurization (VHD) Exhaust System: IAS provides instrument quality air for ventilation and cooling air for 16 AP and two MP gloveboxes and the MP pelletizing press bellows.
- Very High Depressurization (VHD) Exhaust System: Super dry air (-80°C dew pt.) is used for ventilation and cooling of the AP powder and electrolyzer gloveboxes.
- The I&C system uses bubbling air in all AP process units to measure level and density.

11.9.1.11 Breathing Air System

11.9.1.11.1 Function

The function of the Breathing Air System is to supply clean, dry breathing air to the MOX Fuel Fabrication Building breathing air headers for operational and emergency usage.

The Breathing Air System is an independent air supply system that is used to provide air for personnel breathing in an emergency. It is not connected to any other system so that no cross-contamination can occur. The breathing air has a dew point equal to or lower than +40°F (+4.4°C).

Each Breathing Air System consists of a skid-mounted compressor system, a breathing air purifier system (including a coalescing filter, a dual alternating desiccant dryer, a catalytic converter for oxidizing carbon monoxide to carbon dioxide, an activated carbon filter for removal of odor and unpleasant odors and tastes, and a final particulate filter), the breathing air receiving tank inside the MOX Fuel Fabrication Building, and the piping distribution system. Auxiliary breathing air gas bottles are used to supplement the breathing air in an emergency when there is a failure of the compressors and air in the receivers has been used. The breathing air is then distributed to the various locations in the MP and AP Areas. At each use point, a final filter and a pressure regulator are provided to supply low-pressure breathing air to the user.

The breathing air receiver tank will have a minimum capacity of 45 minutes of operation for users in the event of a loss of power to the compressors. All air-operated valves and dampers in this system have fail-safe positions and/or individual buffer air storage. Breathing air supplied to system users will meet the requirements for Grade D air in accordance with CGA G-7.1. The breathing air design will use the ANSI Z88.2-92 standard for respiratory protection for guidance.

11.9.1.11.2 Description

The Breathing Air System consists of two parallel service air compressors, two breathing air purifiers, a receiving tank, and the breathing air header to store and supply breathing air for operational and emergency usage. Breathing air is supplied at 101.5 psig with a dew point of +40°F (at 14.5 psig) and is filtered to remove particulates greater than 0.01 µm. Emergency breathing air cylinders are also provided in the breathing air header for backup.

Figure 11.9-11 provides a schematic of the Breathing Air System.

11.9.1.11.3 Major Components

The major components of the Breathing Air System are as follows:

- **Breathing Air Compressors** – At least two, non-lubricated type air compressors receive, compress, and dry outside air to be stored in the breathing air receivers. The standby diesel generators are used as an alternate power source for the compressors in the event of a power loss.

- **Breathing Air Purifier** – The purifier is used to remove mists, water, carbon monoxide, and all particulates larger than 0.01 μm. The resulting breathing air will have a dew point of +40°F or less at 14.5 psig.
- **Receivers** – Buffer tanks for the MP and AP Areas store pressurized breathing air.

11.9.1.11.4 Control Concepts

The control concepts for the Breathing Air System are as follows:

- **Breathing Air Compressor Operation and Load Control** – The compressors are placed in service and loaded, as needed, by automatic load controllers sensing header and receiver pressure.

11.9.1.11.4.1 System Interfaces

The Breathing Air System does not connect to any other systems. It interfaces with the Normal and Standby Power Supplies.

11.9.1.12 Vacuum Radiation Monitoring System

11.9.1.12.1 Function

The function of the Vacuum Radiation Monitoring System is to provide the motive force to draw air from each enclosed, monitored space through its associated continuous air monitor detector assembly and to exhaust it into the High Depressurization Exhaust System via a common vacuum header and pumps.

11.9.1.12.2 Description

The Vacuum Radiation Monitoring System consists of a common vacuum header and associated piping connected to the outlet of parallel continuous air monitors and samplers designed to sample and evaluate airborne radioactivity throughout the MOX Fuel Fabrication Building. It will also provide vacuum for an additional 10% to 15% connection points for portable monitors and air samplers. The motive force (vacuum) is provided by multiple, parallel vacuum pumps in continuous service with at least one spare. The vacuum pumps discharge into the High Depressurization Exhaust System. The system is sized to provide vacuum based on airflow requirements.

Figure 11.9-12 provides a schematic of the Vacuum Radiation Monitoring System.

11.9.1.12.3 Major Components

The major components of the Vacuum Radiation Monitoring System are as follows:

- **Vacuum Pumps** – The system utilizes multiple, parallel full-capacity vacuum pumps with a design margin to achieve the required vacuum and airflow conditions.

- **Bypass Valve** – To allow precise vacuum control and to let the pumps operate near optimum efficiency, makeup flow is provided to the pump suction. The bypass valve for makeup flow is controlled by suction header pressure.

11.9.1.12.4 Control Concepts

The primary control requirement for the Vacuum Radiation Monitoring System is to control the vacuum header pressure and allow the pump to operate at or near its optimum efficiency point. To achieve this, makeup flow is provided to the pump suction. The bypass valve for makeup flow is controlled by suction header pressure.

11.9.1.12.5 System Interfaces

The Vacuum Radiation Monitoring System interfaces with the continuous air monitors and air samplers, High Depressurization Exhaust System, and normal and standby power supplies.

11.9.2 Bulk Gas Systems

The Bulk Gas Systems within the MOX Fuel Fabrication Building are as follows:

- Nitrogen System
- Argon/Hydrogen System
- Helium System
- Oxygen System.

There are no bulk gas systems with a safety function, thus none are designated as a PSSC. See Chapter 5 for additional information regarding the designation of PSSC.

11.9.2.1 Nitrogen System

11.9.2.1.1 Function

The Nitrogen System normally supplies gaseous nitrogen for the following:

- Once-through ventilation of gloveboxes
- Atmosphere changes for the sintering furnace airlocks
- Scavenging of the calcination furnace bearings (to extend the life of the bearings)
- Hydrazine and hydroxylamine nitrate tanks
- Other miscellaneous process users.

The system also provides gaseous nitrogen as the backup supply for dried instrument air ventilation of gloveboxes, equipment, and the pelletizing press bellows. In addition, nitrogen serves as a third backup for the sintering furnace in the event that the furnace loses its main argon/hydrogen supply, its backup supply (argon/hydrogen mixed gas cylinders), and its secondary backup supply (argon supply).

In addition, the system supplies liquid nitrogen for cooling gamma spectrometry detectors in the counting room and miscellaneous laboratory users. The liquid nitrogen supply, when vaporized, also serves as the backup supply for gaseous nitrogen.

It should be noted that none of these functions are credited in the safety analysis to satisfy the requirements of 10 CFR §70.61; thus, this system is not designated as a PSSC.

11.9.2.1.2 Description

Gaseous nitrogen is supplied by an onsite nitrogen production system in which nitrogen is separated and dried from ambient air. Liquid nitrogen storage and an ambient air vaporizer provide backup for the onsite gaseous nitrogen production unit. A line upstream of the nitrogen vaporizer provides liquid nitrogen for counting room detectors via a buffer tank.

A nitrogen buffer tank is provided in the Gas Storage Area to supply users in the MP Area. A nitrogen buffer tank located in the Reagent Processing Building serves the users in the AP Area and the Reagent Processing Building. Pressure-reducing valves are provided downstream of the buffer tanks. Nitrogen is also stored in a buffer tank in the MP Area to supply the germanium detectors. Both the operating and reserve detectors are provided with nitrogen cooling. Nitrogen for laboratory uses is supplied from local bottles.

Figure 11.9-13 provides a schematic of the Nitrogen System.

11.9.2.1.3 Major Components

The major components of the Nitrogen System are as follows:

- **Nitrogen Production Unit** – The nitrogen production unit produces nitrogen by air liquefaction.
- **Liquid Nitrogen Storage** – Onsite liquid nitrogen storage is used as a backup to the nitrogen production unit. An atmospheric vaporizer provides a reliable means of vaporizing the liquid nitrogen.

11.9.2.1.4 Control Concepts

The instrumentation and control features in the Nitrogen System are concerned with monitoring and regulating the nitrogen pressure in the system. Pressure regulators and control valves in the Nitrogen System regulate system pressure. Pressure transmitters and pressure gauges are used to monitor system pressure and to alert operators to any abnormal conditions that require operator intervention.

The nitrogen generation and vaporization system is vendor-packaged and, as a consequence, alarms from the vendor-packaged units alert operators to system conditions that require operator intervention.

The Nitrogen System penetrations into the MOX Fuel Fabrication Building are provided with double isolating valves to automatically isolate the MOX Fuel Fabrication Building during a seismic event.

11.9.2.1.5 System Interfaces

The Nitrogen System interfaces with the following:

- Gloveboxes
- Sintering furnace (atmospheric scavenging and tertiary backup)
- Calcining Furnace (Scavenging for Bearings)
- Oxalic Precipitation and Oxidation Unit
- Hydrazine and Hydroxylamine Units in the Reagent Processing Building
- Germanium detectors in the MP Area
- Normal Power Supply
- Seismic detectors, which provide a signal to automatically isolate the nitrogen line penetrations into and out of the MOX Fuel Fabrication Building during a seismic event.

11.9.2.2 Argon/Hydrogen System

11.9.2.2.1 Function

The Argon/Hydrogen System provides an argon/hydrogen gas mixture for the operating electric sintering furnace and sintering furnace airlocks and for general laboratory use. Pure argon is supplied to the standby sintering furnace and is used in the laboratory.

The Argon/Hydrogen System mixes gaseous argon and hydrogen to form a 95% Argon/5% Hydrogen gas mixture that is used in scavenging the operating electric sintering furnace and sintering furnace airlocks in the MP Area. It is also used in the laboratory. A standby system, consisting of premixed argon/hydrogen cylinders, will be provided as primary backup. Argon provides secondary backup and nitrogen provides tertiary backup.

11.9.2.2.2 Description

The argon is supplied from two argon vaporizing packages consisting of bulk liquid argon storage tanks, ambient temperature vaporizers, and associated instrument and piping components. It is stored in the Gas Storage area. Gaseous argon from the vaporizers is mixed with hydrogen before being placed into one of two buffer tanks. Some argon bypasses the mixers and buffer tanks and goes directly to the sintering furnaces as required for argon scavenging, or to the laboratory.

The argon and hydrogen systems have automatic isolation valves. The argon system has isolation valves in multiple locations so that the system can be partially isolated when necessary. The hydrogen system has redundant isolation valves.

Normally one static mixer and one buffer tank will be in use and the other in standby mode.

The nominal mixture is maintained at a minimum of 95% argon and a maximum of 5 % hydrogen.

The homogeneous argon/hydrogen mixture is received in a buffer tank.

A low-pressure signal in the buffer tank, indicating an argon system upset, opens the valve to the buffer tank on standby. If that is ineffective, the back-up cycle starts. The argon/hydrogen pressure is reduced downstream of the buffer tanks. Once the argon/hydrogen gas enters the MOX Fuel Fabrication Building, the hydrogen content is again measured. A high level detected by this monitor causes the automatic isolation of the hydrogen system. There are three levels of backup for the Argon/Hydrogen System: primary backup is provided by a multiple tube trailer of premixed argon/hydrogen gas; secondary backup is provided by 100% argon; and tertiary backup is provided by nitrogen. Local bottles of argon and hydrogen are also available for laboratory use. Argon/Hydrogen System lines and vessels are provided with nitrogen scavenging.

Figure 11.9-14 provides a schematic of the Argon/Hydrogen System.

11.9.2.2.3 Major Components

The major components of the Argon/Hydrogen System are as follows:

- **Liquid Argon Bulk Storage System** – The skids include a liquid argon storage tank, an ambient temperature vaporizer, pressure control valves, and other associated instrumentation and piping.
- **Hydrogen Tube Trailer** – The package includes hydrogen tube trailer storage, pressure control valves, other associated instrumentation, and piping.
- **Backup Argon/Hydrogen Cylinders**- Tube trailer of premixed Ar/H_2 cylinders (maximum 5% H_2).
- **In-line Mixing Stations** – Redundant in-line mixing stations, each consisting of proportioning valves and static mixers, are dedicated to a separate buffer tank. The mixers are used to combine the argon and hydrogen before they are stored in the buffer tanks. The mixers have stationary intersecting elements that combine the argon and hydrogen streams to form one homogeneous stream.
- **Buffer Tanks** – There are two buffer tanks. Each buffer tank can supply the argon/hydrogen mix to either sintering furnace.

11.9.2.2.4 Control Concepts

- Argon and hydrogen levels are monitored after mixing. A high level of hydrogen causes automatic Hydrogen System isolation.
- Switching from normal to pre-mixed backup supply of argon/hydrogen is done automatically, or on furnace operator request.
- Both the argon and hydrogen flows are metered using flow control valves.
- Pressure control valves are used throughout the system to ensure the proper pressure for the argon/hydrogen mix is delivered to the sintering furnaces and that of argon is delivered to the laboratory and sintering furnaces for scavenging.
- Redundant hydrogen monitors are used to cause automatic isolation of the hydrogen system in the event of high hydrogen concentration in the argon/hydrogen mixture.
- MOX Fuel Fabrication Building Isolation – The argon/hydrogen penetration into the MOX Fuel Fabrication Building is provided with double isolating valves to automatically isolate during a seismic event.

Process Safety Controls for hydrogen/argon gas mixtures are as follows:

The Argon/H_2 mixture will be controlled to contain a maximum of 5% H_2 by weight.

In addition:

[This mixing is controlled to maintain a minimum of 95% argon and a maximum of 5 % hydrogen .

The hydrogen distribution system will be designed and operated following the recommendations of NFPA 50A, "Standard for Gaseous Hydrogen Systems at Consumer Sites."

The design of the sintering furnace, including the electrical heating system, gas supply, mixing system, and flow controls and piping system will comply with the requirements of NFPA 86C, "Standard for Industrial Furnaces Using a Special Processing Atmosphere."

[ ]

The sintering furnace is operated slightly above atmospheric pressure to prevent ingress of air into the furnace.]

Each process room containing a sintering furnace is equipped with hydrogen detectors, which terminate argon/hydrogen flow (and initiate 100% argon flow) if hydrogen is detected in the room

11.9.2.2.5 System Interfaces

The Argon/Hydrogen System interfaces with the following:

- Sintering furnaces
- Normal Power Supply
- Standby Power Supply
- Nitrogen System
- Instrument Air

11.9.2.3 Helium System

11.9.2.3.1 Function

The Helium System provides helium for rod pressurization, scavenging for rod plug welding and rod seal welding, and miscellaneous laboratory usage.

11.9.2.3.2 Description

Helium is supplied from tube trailers at 200 bar (2,900 psia). The helium distribution line for rod pressurization is at 34 bars (493 psia). The welding scavenging line is at 3 bars (43.5 psia). Each fresh cylinder is emptied from 200 to 38 bars (2,901 to 551 psia) for supplying rod pressurization. When the cylinder pressure drops to 38 bars (551 psia), it is switched over to the supply scavenging line. A cross connection is provided to lower the pressure from 38 bar to 3 bar. Local bottles provide helium for laboratory use.

Figure 11.9-15 provides a schematic of the Helium System.

11.9.2.3.3 Major Components

The major components of the Helium System are as follows:

- **Tube Trailer** – The Helium System contains a tube trailer that is the source of high- and low-pressure helium.
- **Piping and Switchover Circuit** – The external piping and switchover circuit provide the means to regulate pressure to the users and the ability to switch to low-pressure users once the helium supply for high-pressure users has been exhausted.

11.9.2.3.4 Control Concepts

The instrumentation and control features in the Helium System primarily deal with monitoring and regulating pressure. Pressure regulators in the system maintain system pressure. Pressure

transmitters are used to monitor system pressure and to switch from the high- to the low-pressure circuit. The pressure alarms and pressure gauges alert operators to any abnormal conditions that require operator intervention.

The Helium System penetrations into the MOX Fuel Fabrication Building are provided with double isolating valves to automatically isolate the MOX Fuel Fabrication Building during a seismic event.

11.9.2.3.5 System Interfaces

The Helium System interfaces with the following:

- Rod Cladding and Decontamination Units (for rod pressurization)
- Rod welding scavenging
- Laboratory (for miscellaneous usage)
- Seismic detectors, which provide a signal to automatically isolate the helium line penetrations into and out of the MOX Fuel Fabrication Building during a seismic event.

11.9.2.4 Oxygen System

11.9.2.4.1 Function

The Oxygen System provides oxygen for the calcination furnace in the Homogenization Unit in the AP process and for MP Area laboratory use.

11.9.2.4.2 Description

Oxygen cylinders are stored in the Gas Storage Area for use in the calcination furnace. One cylinder is used for normal operation, and a second is used for backup. The backup oxygen cylinder is connected automatically in case of low pressure. The oxygen requirements for MP Area laboratory use are supplied from local cylinders.

Figure 11.9-16 provides a schematic of the Oxygen System.

11.9.2.4.3 Major Components

The major components of the Oxygen System are as follows:

- **Cylinders and Instrumentation** – The only components of the Oxygen System are two cylinders, piping, and associated instrumentation. One of the cylinders is operating and the other is in standby mode. When the system pressure drops, the pressure controller actuates a three-way valve that switches cylinders.

11.9.2.4.4 Control Concepts

The oxygen supply consists of two cylinders. While one of the cylinders is operating, the other is in standby mode. When the system pressure falls, a controller, based on a signal from the

pressure transmitter in the system, switches the supply source from one cylinder to the other by actuating a three-way valve. Pressure in the oxygen supply lines is monitored using pressure transmitters and pressure gauges. A pressure regulator in the supply line reduces the oxygen supply pressure to that required by the users.

The oxygen supply, regulation, and pressure monitoring system is a vendor-packaged unit with appropriate external alarms to alert the operators to any abnormal operating conditions requiring operator intervention.

The Oxygen System penetrations into the MOX Fuel Fabrication Building are provided with double isolating valves to automatically isolate during a seismic event.

11.9.2.4.5 System Interfaces

The Oxygen System interfaces with the following:

- Calcination furnace in the Oxalic Precipitation and Oxidation Unit
- MP Area laboratory
- Seismic detectors, which provide a signal to automatically isolate the oxygen line penetrations into and out of the MOX Fuel Fabrication Building during a seismic event.

11.9.2.5 Methane/Argon (GMA) System

11.9.2.5.1 Function

The function of the Methane/Argon (P-10) GMA System is to provide a 90% Argon/10% Methane (P-10) gas mixture as a quenching gas for the various personnel radiation monitors.

The GMA System consists of a multiple tube supply trailer that is located in the Gas Storage Area, parallel pressure regulators and pressure relief valves, pressure indicators, shut off and check valves. Within the building, distribution headers route the gas mixture to connections for the various personnel radiation monitoring devices in several rooms throughout the facility.

11.9.2.5.2 Description

The 90% Argon/10% Methane (P-10) gas mixture is required as a reference quenching gas for the various personnel radiation monitors throughout the BMP, Shipping and Receiving Area (BSR), and BAP buildings.

The multi-tube trailers have one supply line with an alternate connection for change outs, valves, controls, indicators and associated piping. The supply line is equipped with an air-operated outlet valve, two parallel pressure control valves, and pressure relief valves. The pressure control valves in the supply line, designated for the personnel radiation monitors, are designed to reduce the pressure for initial distribution. The pressure is further reduced by additional pressure control valves in the headers distributing the gas mixture to the personnel radiation monitor tie-ins.

The multi-tube trailers are designed for refilling or replacement at a gas supplier's site. Based on the usage and time constraints for replacement, the supplier is notified to allow adequate time for a continuous operating supply of the P-10 gas mixture. The multi-tube trailer of gas mixture normally requires change out approximately every 6 weeks. An alternate connection is furnished in order to connect the replacement supply and allow for transfer to the new supply without shutting down the GMA System. The replacement trailer is added before the existing one is shut off, disconnected and removed. That way the supply is not interrupted for trailer replacement. Any supply interruption may cause the associated radiation monitoring instruments to require recalibration.

Figure 11.9-32 provides a schematic of the Methane/Argon (P-10) System.

11.9.2.5.3 Major Components

The major components of the GMA System are as follows:

- **Trailers and Instrumentation** – The only components of the 90% Argon/10% Methane (P-10) System are a multiple tube trailer, piping, and associated instrumentation. One trailer is operating with a spare connection to permit periodic change out as required.

11.9.2.5.4 Control Concepts

Normally an operator will operate the GMA system from a monitor (HSI) in the Utilities Control Room. The system can also be operated from local controls in the process area. The local operator has limited capabilities to perform operations (i.e., loading, control of manual valves, start stop equipment in maintenance mode, etc.).
The GMA system can operate in any of the following modes:

- Automatic mode
- Manual mode (used at operator discretion, including operation during maintenance)

Only the operator of the GMA system in the Utilities Control Room can select the operating mode. During normal operation, the GMA system runs in the automatic mode. During maintenance, the GMA system can run in the manual mode.

11.9.2.5.5 System Interfaces

Personnel Radiation Monitors

The 90% Argon/10% Methane System interfaces with the various Personnel Radiation Monitors throughout the MOX Facility. Tie-in connections are available as follows:

- BAP Levels 1 through 5
- BMP Levels 1 through 3
- BSR Levels 1 and 3

Electrical and I&C

The power for the GMA System controls and monitoring is provided from a 120-volt UPS utilities panel. The seismic isolation valves are also powered by 120-volt UPS utilities panel.

Instrument Air Supply (IAS)

The Instrument Air System supplies motive air to the GMA air-operated valves. For each GMA AOV, the GMA to IAS boundary is air inlet side of the first root valve upstream of the air operator.

11.9.3 Reagent Systems

The Reagent Systems within the MOX Fuel Fabrication Building are as follows:

- Nitric Acid System
- Silver Nitrate System
- Tributyl Phosphate System
- Hydroxylamine Nitrate System
- Sodium Hydroxide System
- Oxalic Acid System
- Diluent System
- Sodium Carbonate System
- Hydrogen Peroxide System
- Hydrazine System
- Manganese Nitrate System
- Decontamination System
- Nitrogen Oxide System.
- Aluminum Nitrate System
- Zirconium Nitrate System

There are no safety functions associated with reagent systems, thus none are designated as a PSSC. See chapter 5 for additional information regarding the designation of PSSCs.

11.9.3.1 Nitric Acid System

11.9.3.1.1 Function

The Nitric Acid System provides nitric acid to the AP process for the following:

- Dissolving PuO_2 in the Dissolution Unit and Dechlorination Dissolution Unit
- Plutonium stripping and acid scrubbing in the Purification Cycle
- Acidification in the Solvent Recovery Cycle and Oxalic Precipitation and Oxidation Unit
- Oxalic mother liquor adjustment in the Oxalic Precipitation and Oxidation Unit
- Oxalic mother liquor concentration in the Oxalic Mother Liquor Recovery Unit.

The Nitric Acid System also provides nitric acid for the preparation of hydrazine, oxalic acid, manganese nitrate, uranium nitrate, decontamination solution, zirconium nitrate, and silver nitrate reagents.

11.9.3.1.2 Description

The 13.6N nitric acid is stored in totes in the Reagent Processing Building. It is transferred into the 13.6N fresh nitric acid storage tank in the Reagent Processing Building and then pumped into the fresh acid break pot to supply Hydrazine System users in the Reagent Processing Building. Nitric acid is also pumped to a 13.6N fresh nitric acid storage tank in the AP Area to supply users in that area. In the Reagent Processing Building a nitric acid drain tank is used to capture spills and drains from the 13.6N fresh nitric acid storage tank and transfer pumps in the Reagent Processing Building. Nitric acid is pumped from the 13.6N fresh nitric acid storage tank in the AP area to two break pots: one to supply process users (6N nitric acid preparation tank) and the other to supply preparation tanks for 1.5N nitric acid, 0.05M oxalic acid, manganese nitrate, and silver nitrate.

The 6N nitric acid is prepared in a tank in the AP Area by mixing 13.6N nitric acid with demineralized water. The tank is pressurized with compressed air. During normal operation of the AP process, the use of high pressure 6 N nitric acid is not required as the nitric acid is fed to the electrolyzers from atmospheric tanks by gravity. However, if one of the electrolyzers in the Dissolution or Dechlorination Dissolution units must be emptied for maintenance or repair (a very exceptional condition), the contents are temporarily manually transferred to the corresponding downstream geometrically safe slab tank, bypassing the filter that usually removes minute amounts of undissolved PuO_2. If the liquid were processed through the filter to remove the particulates, the undissolved PuO_2 particulates in the liquid could blind the filter and make the transfer impossible.

The electrolyzer is designed and tested to prevent settling out of the particulates as they are dissolved; however, the slab tank is unable to maintain the particulates in suspension because of its required geometry and lack of mixing equipment. As a result, when the solution is returned back to the electrolyzer, many particulates may remain as residue in the bottom and on the sides of the slab tank. These must be resuspended in the smallest volume possible and transferred back to the electrolyzer so that the particulate PuO_2 can be redissolved through normal process at the electrolyzer.

Resuspending the particulate PuO_2 requires the use of pressurized nitric acid to dislodge the particulates from the walls and bottom of the slab tank. Compressed air will be used to supply nitric acid from a dedicated nitric acid pot (see Figure 11.9-33). The pot and all connecting components will be designed for the 7 barg (100 psig) pressure condition, safely isolating the rest of the nitric acid system from the high pressure. The piping is rated for 150 psig.

During the resuspensioning stage, the 100 psig nitric acid would be introduced into the tank in small amounts until, after two or three cycles of rinsing, the particulates are resuspended and returned to the electrolyzer. The wash volume is restricted to the volume of the electrolyzer.

The slab tank is unaffected by the pressure of the nitric acid as the pressure drops to system pressure (-2" W.C.) immediately on exiting from the inlet nozzle. The tank is vented directly to the offgas system that is maintained at an even more negative pressure. Thus, the only part of the system affected by the high pressure is the standby tank, the isolation valves, and piping.

The 1.5N nitric acid is prepared in a tank in the AP Area by mixing 13.6N nitric acid with demineralized water. The mixture is transferred to a buffer tank. A dosing pump is used to feed the process from the buffer tank.

The vents from all the nitric acid tanks in the Reagent Processing Building are collected in a vent scrubber where the nitric acid vapors are scrubbed with demineralized water to remove suspended acidic droplets prior to being vented to the atmosphere. The vents from the nitric acid tanks in the AP Area are directed to a second vent scrubber for polishing prior to being vented to the atmosphere.

Vessels and components are segregated/separated from incompatible chemicals. The chemical makeup of the reagents introduced into the cells or AP Area reagent rooms is controlled to prevent explosions caused by chemical reactions. All chemicals, piping, tanks, and other components in the Nitric Acid System are clearly labeled to prevent reagent preparation errors.

Figure 11.9-17 provides a schematic of the Nitric Acid System.

11.9.3.1.3 Major Components

The major components of the Nitric Acid System with wetted surfaces are fabricated from Type 304L stainless steel for corrosion resistance. These components include the following:

- Reagent Processing Building fresh nitric acid storage tank
- Nitric acid drain tank
- Nitric acid distribution and transfer pumps
- Fresh nitric acid pumps
- AP Area fresh nitric acid storage tank
- AP Area fresh nitric acid pumps
- 6N nitric acid preparation tank
- Reagent Processing Building column for nitric acid vent washing
- AP Area column for nitric acid vent washing
- AP Area Gas Stripping Column
- 1.5N Nitric acid preparation tank
- 1.5N nitric acid buffer tank
- 1.5N nitric acid distribution pumps.

11.9.3.1.4 Control Concepts

The control concepts for the Nitric Acid System are as follows:

- **13.6N Nitric Acid Tank in the Reagent Processing Building** – When low level is reached in this tank, the transfer pumps and distribution pumps are stopped and the control room operator is notified. The control room operator asks the local operator to transfer 13.6N nitric acid from a tote tank. The tank level is monitored at the tote emptying station. When a preset amount of nitric acid is transferred to the tank, the control room operator is notified. The control room operator validates the "tank ready" signal, enabling the transfer of nitric acid to users.

- **13.6N Nitric Acid Tank in the AP Area** – When this tank reaches a low level, the AP Area fresh nitric acid pumps are stopped and the fresh nitric acid pumps in the Reagent Processing Building are started to fill up this tank.
- **6N Nitric Acid Tank** – When this tank reaches a low level, the control room operator is notified. The control room operator asks the local operator to start a new preparation cycle. The local operator opens the demineralized water valve and introduces a preset amount of water. After the demineralized water valve is fully closed, the nitric acid valve opens. A preset quantity of nitric acid is introduced and the nitric acid valve is closed. The local operator then checks the level and checks the sample. If the sample is satisfactory, the local operator notifies the control room operator that the tank is ready. The control room operator then validates the "tank ready" signal, enabling supply of 6N nitric acid to users by pressurization of the tank with instrument air.
- **1.5N Nitric Acid Preparation Tank** – When this tank reaches a low level, the draw-off valve on the outlet is closed and the control room operator is notified. The control room operator asks the local operator to start a new preparation cycle. The local operator opens the demineralized water valve and introduces a preset amount of water. After the demineralized water valve is fully closed, the 13.6N nitric acid valve opens. A preset quantity of nitric acid is introduced from the control room and the nitric acid valve is closed. The local operator then checks the level and checks the sample. If the sample is satisfactory, the local operator notifies the control room operator that the tank is ready. The control room operator then validates the "tank ready" signal, enabling supply of 1.5N nitric acid to process users by the dosing pump.
- **1.5N Nitric Acid Buffer Tank** – The level in this tank is monitored by the control room operator. The control valve on the inlet line is opened on low level in this tank. The control valve on the inlet line is closed on high level in this tank to prevent overfilling. The distribution pumps are stopped on low-low level in this tank.
- **Nitric Acid Drain Tank** – This tank accepts spills and drains from the nitric acid system in the Reagent Processing Building. The tank has a level controller to warn the local operator that a high level has been reached and also stops the transfer of nitric acid into the tank. On tank pump out, the level controller warns the operator of low level and stops the pump used to transfer the waste nitric to a waste hauler truck.
- **Column for Nitric Acid Vent Washing in Reagent Processing Building** – This water jet venturi scrubber operates continuously and scrubs nitric acid vapors from the Reagent Processing Building fresh nitric acid storage tank, the Reagent Processing Building fresh nitric acid break pots, and other user tank vents. A level controller on the scrubber sump maintains the sump water level and a manual butterfly valve controls the draft on the suction side of the water jet venturi. Once set, the draft will remain stable since the vents are static (no flow from the vents).
- **Column for Nitric Acid Vent Washing in AP Area** – This water jet venturi scrubber operates continuously and scrubs nitric acid vapors from the Aqueous Polishing Area tank vents, break pot vents, other user tank vents. A level controller on the scrubber sump maintains the sump water level within preset limits and a manual butterfly valve controls

the draft on the suction side of the water jet venturi. Once set, the draft will remain stable since the vents are static (no flow from the vents).

- **Gas Stripping Column for AP Area-** This packed self regulating column operates continuously. Fresh demineralized water is used to scrub the entering vapors via flow control. The flow is sufficient to cause the recirculating scrubber water to overflow the column continuously to the Liquid Waste Reception Unit. Draft in the column is controlled by manually adjusting a regulating butterfly valve which introduces outside air into the column suction intake. Scrubber vapors exiting the column are demisted, pass through two sets of filters in series for filtration prior to entering two exhaust fans which provide the motive force to draw the vapors through the column. A manual balancing butterfly valve redirects some of the fan exhaust to the intake to modulate the fan flow capacity.
- **MOX Fuel Fabrication Building Isolation** – The nitric acid penetrations into the MOX Fuel Fabrication Building are provided with double isolating valves to automatically isolate during a seismic event.

11.9.3.1.5 System Interfaces

The Nitric Acid System interfaces with the following:

- Normal Power Supply
- Standby Power Supply
- Seismic detectors, which provide a signal to automatically isolate fluid penetrations into the MOX Fuel Fabrication Building during a seismic event.

The AP process interfaces for the Nitric Acid System include the following:

- Dissolution Unit
- Dechlorination Dissolution Unit
- Purification Cycle
- Oxalic Precipitation and Oxidation Unit
- Acid Recovery Unit
- Solvent Recovery Cycle
- Oxalic Mother Liquor Recovery Unit
- Liquid Waste Reception Unit
- Uranium Dissolution
- Off Gas Treatment.

The Reagent System interfaces for the Nitric Acid System include the following:

- Oxalic Acid System

- Manganese Nitrate System
- Silver Nitrate System
- Demineralized Water System
- Decontamination system
- Sodium Carbonate
- Sodium Hydroxide
- Hydroxylamine Nitrate
- Diluent
- Hydrazine
- Aluminum Nitrate
- Zirconium Nitrate.

11.9.3.2 Silver Nitrate System

11.9.3.2.1 Function

The Silver Nitrate System provides silver nitrate to the electrolyzers in the Dechlorination Dissolution and Dissolution Unit.

11.9.3.2.2 Description

A prepared 10N silver nitrate solution is added to demineralized water and 13.6N nitric acid in a preparation tank in the AP Area and is then mixed for homogeneity. After sampling to assure solution strength, the solution is fed to process users by a dosing pump.

Figure 11.9-18 provides a schematic of the Silver Nitrate System.

11.9.3.2.3 Major Components

The major components of the Silver Nitrate System are the silver nitrate preparation tank and the silver nitrate pump, both located within the AP Area. The material of construction for all wettable surfaces is Type 304L stainless steel for corrosion resistance.

11.9.3.2.4 Control Concepts

The control concepts for the Silver Nitrate System are as follows:

- The operator in the control room verifies the level of fluid in the silver nitrate preparation tank.
- The operator in the control room issues a command to open the water inlet valve to add a preset quantity of demineralized water into the silver nitrate preparation tank. When the required amount of demineralized water has been added, the demineralized water inlet

valve is closed. After the demineralized water inlet valve is fully closed, the acid inlet valve automatically opens and a preset quantity of 13.6N nitric acid is added. After the required amount of nitric acid has been added to the tank, the nitric acid inlet valve is closed.

- When the nitric acid inlet valve is closed, an "add silver nitrate" message is sent to the local control station and the main control room. The local operator first verifies that the tank has been filled to the correct level. The local operator then manually adds the silver nitrate solution to the tank. The local operator then starts the mixer, which runs for a preset length of time. After the preset time necessary to assure homogeneity has elapsed, the mixer stops and a "tank ready for sampling" message is sent to the control room and the local control station. The local operator then takes a sample and sends it to the laboratory for analysis.
- If the results of analysis of the sample are found to be correct, the operator in the control room is notified by the laboratory. The operator then validates the mixture, which allows the automation to continue.
- The silver nitrate pump is shut down on low-low level in the preparation tank.

11.9.3.2.5 System Interfaces

The Silver Nitrate System interfaces with the Dissolution Unit and Dechlorination Dissolution Unit.

11.9.3.3 Tributyl Phosphate System

11.9.3.3.1 Function

The Tributyl Phosphate System provides TBP for solvent extraction in the Purification Cycle and for solvent washing in the Solvent Recovery Cycle.

11.9.3.3.2 Description

TBP is transferred from totes into the 100% TBP preparation tank in the Reagent Processing Building. TBP is transferred by pump from the 100% TBP preparation tank to a distribution tank located in the AP Area. TBP from the distribution tank is pumped to a break pot and pumped by dosing pump to the Solvent Recovery Unit. The break pot feeds a 30% TBP preparation tank, wherein TBP is mixed with diluent and is used to prepare a 30% TBP solution (solvent). The 30% TBP is fed to the Solvent Recovery Tank.

Figure 11.9-19 provides a schematic of the Tributyl Phosphate System.

11.9.3.3.3 Major Components

The major components of the Tributyl Phosphate System are the 100% TBP preparation tank, 100% TBP transfer pumps, 100% TBP distribution tank, 100% TBP pump, 100% TBP dosing pumps, and 30% TBP preparation tank.

11.9.3.3.4 Control Concepts

The control concepts for the Tributyl Phosphate System are as follows:

- The 100% TBP preparation tank is equipped with a low-level alarm to alert the operator to prepare a new batch. The transfer pump is turned off on low-low level in this tank.
- The 100% TBP distribution tank is equipped with a low-level switch, which starts the transfer pump to fill up this tank. A high level in this tank stops the transfer pump. Low-low level in this tank stops the distribution pump to prevent this tank from emptying.
- TBP is mixed with diluent to prepare 30% TBP in the 30% TBP preparation tank. When the level in this tank is low, the control valve at the outlet of the tank is closed and the control room operator is notified. The control room operator issues a command to open the diluent valve. After a preset amount of diluent is added to the tank, the diluent valve closes. The TBP valve opens after the diluent valve is fully closed. A preset amount of TBP is added. The local operator takes a sample from the tank. If the results of laboratory sample analysis are found to be correct, the local operator notifies the control room operator. The control room operator then allows the automation process to continue to send the 30% TBP solution to users.
- MOX Fuel Fabrication Building Isolation – The TBP penetrations into the MOX Fuel Fabrication Building are provided with double isolating valves to automatically isolate during a seismic event.

11.9.3.3.5 System Interfaces

The Tributyl Phosphate System interfaces with the following AP systems:

- Diluent System
- Nitric Acid System
- Solvent Recovery
- Normal and Standby Power Supply
- Seismic detectors, which provide a signal to automatically isolate the TBP fluid penetrations into the MOX Fuel Fabrication Building during a seismic event.

11.9.3.4 Hydroxylamine Nitrate System

11.9.3.4.1 Function

The Hydroxylamine Nitrate System provides hydroxylamine nitrate for plutonium stripping in the Purification Cycle.

11.9.3.4.2 Description

Hydroxylamine nitrate (HAN) is pumped from a tote tank to the 1.9M hydroxylamine nitrate storage tank in the Reagent Processing Building. From the 1.9M hydroxylamine nitrate storage tank, it is pumped by the transfer pumps to the 1.9M buffer tank in the AP Area and to the 0.15M

hydroxylamine nitrate preparation tank in the Reagent Processing Building. Hydroxylamine nitrate from the 1.9M buffer tank is supplied to the Purification Cycle users.

In the 0.15M hydroxylamine nitrate preparation tank, the 1.9M hydroxylamine nitrate is mixed with 13.6N nitric acid, 4M hydrazine nitrate, 1M nitric acid, and demineralized water to form a solution of 0.15M hydroxylamine nitrate, 0.14M hydrazine nitrate, and 0.1N nitric acid. The 0.15M hydroxylamine nitrate solution is pumped by the 0.15M hydroxylamine nitrate transfer pumps to the 0.15M hydroxylamine nitrate buffer tank in the AP Area. The 0.15M hydroxylamine nitrate distribution pumps supply the solution to a break pot from where it is supplied to the Purification Cycle users.

Figure 11.9-20 provides a schematic of the Hydroxylamine Nitrate System.

11.9.3.4.3 Major Components

The major components of the Hydroxylamine Nitrate System are the 1.9M hydroxylamine nitrate storage tank, 1.9M hydroxylamine nitrate buffer tank, 0.15M hydroxylamine nitrate preparation tank, 0.15M hydroxylamine nitrate buffer tank, hydroxylamine nitrate stripping column, hydrazine and HAN effluents storage tank, and 0.15M hydroxylamine nitrate distribution pumps.

11.9.3.4.4 Control Concepts

The control concepts for the Hydroxylamine Nitrate System are as follows:

- **1.9M Hydroxylamine Nitrate Storage Tank** – A low level in this tank stops the 1.9M hydroxylamine nitrate pumps. A high level stops the HAN drum pump from overfilling the tank. A nitrogen purge is provided under flow control. The tank vents to hydrazine column CLMN1000.
- **1.9M Hydroxylamine Nitrate Buffer Tank** – The totalizer control valve feeding the buffer tank is closed on volumetric batch control. The HAN pump feeding the tank is stopped on high tank level.
- **0.15M Hydroxylamine Nitrate Preparation Tank** – When the 0.15M hydroxylamine nitrate preparation tank reaches low level, the 0.15M hydroxylamine nitrate transfer pumps are stopped and the control room operator is notified. The demineralized water valves are opened, and a predetermined amount of demineralized water is added to the tank. After the water valve is fully closed, a preset quantity of 1.9M hydroxylamine nitrate is added. After the 1.9M hydroxylamine nitrate valve is fully closed, hydrazine nitrate is added. After the hydrazine nitrate valve closes, nitric acid is added. The operator checks the level and takes a sample for laboratory analysis. If the sample is found to be satisfactory, the operator then notifies the control room operator, who validates the "tank ready" signal. The 0.15M hydroxylamine nitrate is then pumped to users.
- **0.15M Hydroxylamine Nitrate Buffer Tank** – A high level in the buffer tank closes the 0.15M hydroxylamine nitrate feed valve to prevent overfilling the tank. A low level in this tank stops the 0.15M hydroxylamine nitrate distribution pumps. A nitrogen purge is provided under flow control. The tank vents to hydroxylamine nitrate stripping column.

- **Hydoxylamine Nitrate Stripping Column** – Circulating fluid is provided for scrubbing the vents from the 0.15 hydroxlamine buffer tank, the 1.9M HAN buffer tank, and the HAN drain tank. The tower is fed with a 5% hydrogen peroxide fresh makeup from a bottle. The vents are drawn through the column via the HAN stripping column fan under manual butterfly valve draft control. The column blowdown is periodically routed to the HAN drain tank.

- **HAN Drain Tank** – The drain tank is used to store the Hydroxyl Amine Stripping Column blowdown before being pumped to drums for disposal. The HAN tank vents to the Hydroxyl Amine Stripping Column. This tank is located in the Aqueous Polishing building.

- **Hydrazine and HAN Effluents Storage Tank** – The hydrazine and HAN effluents storage tank is used to collect all of the drip tray collected drips, piping low point drains, and any equipment overflows that may occur from the HAN and hydrazine tanks, pumps, piping, and vessels located in the Reagents building. A tank high level alarm notifies the local operator that the tank is full. The tank is emptied to a lorry for disposal via the hydrazine and HAN drain pump. A rinsing solution (composition to be determined) is used to rinse the drip trays, piping and hydrazine and HAN effluents storage tank after use.

- **MOX Fuel Fabrication Building Isolation** – The hydroxylamine nitrate fluid penetrations into the MOX Fuel Fabrication Building are provided with double isolating valves to automatically isolate during a seismic event.

11.9.3.4.5 System Interfaces

The Hydroxylamine Nitrate System interfaces with the following:

- Purification Cycle
- Nitrogen system
- Nitric acid system
- Demineralized water system
- Hydrazine system
- Normal and Standby Power Supply
- Seismic detectors, which provide a signal to automatically isolate the hydroxylamine nitrate fluid penetrations into and out of the MOX Fuel Fabrication Building during a seismic event.

11.9.3.5 Sodium Hydroxide System

11.9.3.5.1 Function

The Sodium Hydroxide System provides 10N sodium hydroxide for mixing with hydrazine, for pH control Liquid Waste Reception Unit, for scrubbing liquor in the Dechlorination Dissolution Unit, and 0.1N sodium hydroxide for Solvent Recovery Unit washing.

11.9.3.5.2 Description

Sodium hydroxide is stored in a tote tank in the Reagent Processing Building at a concentration 10N. It is pumped to the 10N Sodium Hydroxide Preparation tank. From the 10N Preparation tank it is pumped to the Hydrazine System, Liquid Waste Reception Unit, and the 0.1N Sodium Hydroxide Preparation Tank. In the 0.1N Sodium Hydroxide Preparation Tank, sodium hydroxide is mixed with demineralized water to prepare 0.1N solution. This tank is equipped with a mixer. The 0.1N solution is then transferred to the distribution tank and pumped to a break pot where it is fed to the Solvent Recovery Cycle.

All vessels in Sodium Hydroxide System are made of 316L stainless steel.

Figure 11.9-21 provides a schematic of the Sodium Hydroxide System.

11.9.3.5.3 Major Components

The major components of the Sodium Hydroxide System are the 10N sodium hydroxide preparation tank, which is located in the Reagents Process building, the 0.1N sodium hydroxide preparation tank, and the 0.1N sodium hydroxide distribution tank, both are located within the AP Area.

11.9.3.5.4 Control Concepts

The control concepts for the Sodium Hydroxide System are as follows:

- **10 N Sodium Hydroxide Preparation Tank** – When the 10N sodium hydroxide preparation tank is nearly empty, the control room operator is warned and manually pumps 10N sodium hydroxide solution from totes to the 10N NaOH Preparation Tank via a drum pump. The drum pump stops on tank high level. On low low level in the 10N NaOH Preparation Tank, the transfer of 10N NaOH stops to the 0.1N NaOH Preparation Tank, the Hydrazine System Tank, and the Liquid Waste Treatment tanks.

- **0.1N Sodium Hydroxide Preparation Tank** – When the 0.1N Sodium Hydroxide Preparation Tank reaches a low level, the draw-off valve on the outlet closes and the control room operator is warned. The operator in the control room issues a command to open the water inlet valve to add a preset quantity of demineralized water into the sodium hydroxide preparation tank. When the required amount of demineralized water has been added, the demineralized water inlet valve is closed. After the demineralized water inlet valve is fully closed, the 10N sodium hydroxide solution control valve is opened and the sodium hydroxide is added. The operator then starts the mixer. After the preset time

necessary for homogeneity has elapsed, the mixer stops and a "tank ready for sampling" message is sent to the control room and the local control station. The local operator then takes a sample and sends it to the laboratory for analysis.

If the results of analysis of the sample are found to be correct, the control room operator validates the "tank ready" signal, which allows the operation of the sodium hydroxide transfer pump to transfer from the 0.1N NaOH Preparation Tank to the 0.1N Distribution Tank. A low-low level in 0.1N NaOH Preparation tank stops the transfer.

- **0.1N Distribution Tank** – when the 0.1N NaOH Distribution Tank reaches high level the 0.1N NaOH transfer valve is closed. On low low level the 0.1N distribution pump stops.
- **MOX Fuel Fabrication Building Isolation** – The fluid penetrations into the MOX Fuel Fabrication Building are provided with double isolation valves to automatically isolate during a seismic event.

11.9.3.5.5 System Interfaces

The Sodium Hydroxide System interfaces with the following:

- Hydrazine System (RHZ)
- Nitric Acid System (RNA)
- Sodium Carbonate System (RSC)
- Solvent Recovery Unit (KPB)
- Liquid Waste Reception Unit (KWD)
- Demineralized Water System (DMW)
- Normal and Standby Power Supply
- Service Air System (SAS)
- Seismic detectors, which provide a signal to automatically isolate the sodium hydroxide fluid penetrations into the MOX Fuel Fabrication Building during a seismic event.

11.9.3.6 Oxalic Acid System

11.9.3.6.1 Function

The Oxalic Acid System provides oxalic acid for converting plutonium nitrate to plutonium oxalate in the Oxalic Precipitation and Oxidation Unit.

11.9.3.6.2 Description

Solid oxalic acid is stored in bags in the Reagent Processing Building. The bags are fed to a bag-opening feeder provided with a vibrator that is coupled with the preparation tank. The

feeder is equipped with an exhaust fan and an on-off valve on the outlet. The on-off valve can be opened and closed, as required, to transfer a premeasured amount to the preparation tank.

The oxalic acid is dissolved in demineralized water in a preparation tank in the Reagent Processing Building to make a 0.7M solution. The 0.7M preparation tank is electrically heated to 122°F (50°C). The tank is equipped with an agitator to provide mixing. Oxalic acid transfer pumps transfer the solution to a buffer tank in the AP Area.

From the buffer tank, the solution is pumped to a break pot and fed to the process users. The same pump also transfers the solution to the 0.05M preparation tank. This tank is equipped with an agitator. Demineralized water and 13.6N nitric acid solution are mixed with the 0.7M oxalic acid solution to form a solution of 0.05M oxalic acid and 2N nitric acid. The resultant solution is then pumped to the 0.05M oxalic acid break pots where it is fed to the process users.

Figure 11.9-22 provides a schematic of the Oxalic Acid System.

11.9.3.6.3 Major Components

The major components of the Oxalic Acid System are as follows:

- **Oxalic Acid Feeder** – This vibratory feeder is equipped with an exhaust fan. The purpose of the feeder is to charge a predetermined amount of oxalic acid to the preparation tank. The fan exhausts the particulate emissions from the powder loading operation through a filter.
- **Preparation Tank** – A preparation tank receives the oxalic acid powder and mixes it with demineralized water to prepare a 0.7M oxalic acid solution. The tank is equipped with an agitator for mixing and an electric heater to maintain the temperature necessary for preparing the solution.
- **Oxalic Acid Transfer Pumps** – The transfer pumps send the 0.7M oxalic acid solution from the preparation tank to the buffer tank inside the AP Area.
- **Buffer Tank** – The buffer tank receives 0.7M oxalic acid from the preparation tank and provides oxalic acid storage capacity in the AP Area.
- **0.7M Oxalic Acid Distribution Pumps** – The pumps are used to send part of the oxalic acid to the break pot that supplies the end users. The transfer pumps also send the remaining portion to the 0.05M oxalic acid preparation tank.
- **0.05M Oxalic Acid Preparation Tank** – The tank receives 0.7M oxalic acid from the buffer tank. Demineralized water and 13.6N nitric acid are added to the tank to dilute the oxalic acid concentration to 0.05M before it is transferred to the end users via a break pot.
- **0.05M Oxalic Acid Pumps** – The 0.05M oxalic acid pumps transfer the dilute oxalic acid to the break pot.
- **Break Pots** – Break pots for 0.7M and 0.05M oxalic acid receive the acid from the 0.7M and the 0.05M oxalic acid pumps, respectively, and supply the end users.

11.9.3.6.4 Control Concepts

The control concepts for the Oxalic Acid System are as follows:

- When the level in the 0.7M oxalic acid preparation tank is low, the draw-off valve is automatically closed and the operator is notified via alarm of a low level condition in the vessel that starts a new preparation cycle.
- At the beginning of a new preparation cycle, demineralized water is transferred to the preparation tank. When the demineralized water fills the tank to the correct level, the demineralized water transfer stops, which provides permission to begin the transfer of oxalic acid powder to the preparation tank.
- Next, the operator begins transferring oxalic acid powder to the preparation tank. When a predetermined number of bags have been added to the preparation tank, the operator stops the transfer process with an "end of transfer" message.
- The "end of transfer" message disables the powder transfer valve and starts electric heating of the preparation tank. It takes approximately two hours to reach the desired temperature of 122°F (50°C). The preparation tank cycles between 104°F (40°C) and 122°F (50°F) for a predetermined time. Once appropriate homogenization and tank temperature have been achieved, a "tank ready" indication is provided.
- The operator takes a sample and verifies that the preparation is correct. Once the sample is verified correct, the operator acknowledges the "tank ready" indication, which disables heating to the preparation tank, stops agitation in the tank, and enables the tank drain valve.
- The preparation tank transfer pumps are shut off on low-low level in the 0.7M preparation tank.
- The preparation tank transfer pumps are started on low level in the buffer tank. The transfer pumps are stopped on high level in the buffer tank to prevent overfilling. The buffer tank distribution pumps are stopped on low-low level in the buffer tank.
- When the 0.05M oxalic acid preparation tank is empty, the 0.05M pumps are stopped. This condition notifies the operator via an alarm that a new preparation cycle should begin.
- At the beginning of the new cycle, the demineralized water valve opens to introduce a predetermined fixed quantity of water to the 0.05M preparation tank. A predetermined fixed quantity of 0.7M oxalic acid is then introduced to the preparation tank. In the next step, 13.6N nitric acid is added to the preparation tank. The agitator is operated for a predetermined amount of time. The tank is sampled to verify concentration. If the tank concentration meets specifications, the operator acknowledges the "tank ready" signal.
- Once the "tank ready" permissive is received, the 0.05M oxalic acid recirculation pumps recirculate the oxalic acid through the oxalic acid break pot.
- MOX Fuel Fabrication Building Isolation – The oxalic acid penetrations into the MOX Fuel Fabrication Building are provided with double isolating valves to automatically isolate the MOX Fuel Fabrication Building during a seismic event.

11.9.3.6.5 System Interfaces

The Oxalic Acid System interfaces with the following:

- Demineralized Water System
- Nitric Acid System
- Oxalic Precipitation and Oxidation Unit
- Normal Power Supply
- Seismic detectors, which provide a signal to automatically isolate the oxalic acid fluid penetrations into the MOX Fuel Fabrication Building during a seismic event.

11.9.3.7 Diluent System

11.9.3.7.1 Function

The Diluent System provides diluent (C_{10}-C_{13} isoalkanes) for washing in the Purification and Solvent Recovery Unit, as well as diluent makeup for preparation of the 30% TBP "solvent" solution.

11.9.3.7.2 Description

Fresh diluent is stored in tote tanks in the Reagent Processing Building and is transferred into a storage tank in the Reagent Processing Building prior to usage. It is pumped to a diluent distribution tank and to a 30% TBP preparation tank located in the AP Area. All the tanks are vented to the a Nitric Acid Scrubbing Column. A dosing pump is used to supply diluent to various process users.

Figure 11.9-23 provides a schematic of the Diluent System.

11.9.3.7.3 Major Components

The major components of the Diluent System are as follows:

- Fresh diluent preparation tank
- Fresh diluent transfer pump
- Fresh diluent distribution tank
- Dosing pump.

11.9.3.7.4 Control Concepts

The control concepts for the Diluent System are as follows:

- The fresh diluent tank is equipped with a low-level alarm to alert the operator to prepare a new batch. The fresh diluent transfer pump is turned off on low-low level in the fresh diluent tank.
- The transfer pump is turned off on high level in the fresh diluent distribution tank or the 30% TBP preparation tank. The metering pump is turned on and off as various users demand diluent flow. This tank also has a low level, which starts the transfer pump to fill up this tank.
- MOX Fuel Fabrication Building Isolation – The Diluent fluid penetrations into the MOX Fuel Fabrication Building are provided with double isolating valves to automatically isolate during a seismic event.

11.9.3.7.5 System Interfaces

The Diluent System interfaces with the following:

- Purification Cycle
- Nitric Acid System
- Solvent Recovery Unit
- Tributyl Phosphate System
- Normal and Standby Power System
- Seismic detectors, which provide a signal to automatically isolate diluent fluid penetrations into the MOX Fuel Fabrication Building during a seismic event.

11.9.3.8 Sodium Carbonate System

11.9.3.8.1 Function

Sodium carbonate is used in the Solvent Recovery Unit for sodium carbonate wash.

11.9.3.8.2 Description

Solid sodium carbonate is stored in bags in the Reagent Processing Building. It is dissolved in demineralized water to prepare a 0.3M solution in the preparation tank. The preparation tank is equipped with an agitator. The solution is then pumped to the distribution tank in the AP Area. From the distribution tank, the solution is supplied to the process user using dosing pumps. Sodium carbonate is used for washing in the mixer-settler in the Solvent Recovery Unit.

Figure 11.9-24 provides a schematic of the Sodium Carbonate System.

11.9.3.8.3 Major Components

The major components of the Sodium Carbonate System are as follows:

- **Sodium Carbonate Feeder** – This is a manual feeder equipped with a dust hood.
- **Sodium Carbonate Preparation Tank** – The sodium carbonate preparation tank is used to prepare a 0.3M solution of sodium carbonate. Sodium carbonate powder is added to the preparation tank and mixed with demineralized water to prepare the desired concentration of material. The preparation tank is equipped with an agitator to enhance mixing.
- **Sodium Carbonate Transfer Pumps** – The preparation tank is equipped with two transfer pumps to transfer the sodium carbonate solution to the distribution tank.
- **Sodium Carbonate Distribution Tank** – The distribution tank is located inside the AP Area and receives sodium carbonate from the preparation tank. The distribution tank is used to supply the mixer-settler in the Solvent Recovery Unit.
- **Sodium Carbonate Dosing Pumps** – The sodium carbonate distribution tank is equipped with two dosing pumps that meter small quantities of sodium carbonate to the Solvent Recovery Unit as required.

11.9.3.8.4 Control Concepts

The control concepts for the Sodium Carbonate System are as follows:

- When the level in the sodium carbonate preparation tank is low, the draw-off valve is automatically closed and the operator is notified via alarm of a low-level condition in the vessel that starts a new preparation cycle.
- At the beginning of a new preparation cycle, the demineralized water is transferred to the preparation tank. When the demineralized water fills the tank to the correct level, the demineralized water transfer stops, which provides permission to begin transfer of sodium carbonate powder to the preparation tank.
- Next, the operator begins transferring the sodium carbonate powder to the preparation tank. When a predetermined number of bags have been added to the preparation tank, the operator stops the transfer process with an "end of transfer" message. The agitator is turned on and runs for a predetermined amount of time.
- The operator takes a sample and sends it to the laboratory for analysis. Once the sample is verified correct, the operator acknowledges the "tank ready" indication, which enables the tank drain valve.
- When the sodium carbonate distribution tank in the AP Area is empty, it provides a signal to operate the drain valve at the bottom of the sodium carbonate preparation tank. Sodium carbonate solution is transferred to the sodium carbonate tank in the AP Area using transfer pumps.

- MOX Fuel Fabrication Building Isolation – The sodium carbonate penetrations into the MOX Fuel Fabrication Building are provided with double isolating valves to automatically isolate during a seismic event.

11.9.3.8.5 System Interfaces

The Sodium Carbonate System interfaces with the following:

- Demineralized Water System
- Solvent Recovery Cycle
- Nitric Acid System
- Liquid Waste Reception Unit
- Normal and Standby Power Supply
- Seismic detectors, which provide a signal to automatically isolate the sodium carbonate fluid penetrations into the MOX Fuel Fabrication Building during a seismic event.

11.9.3.9 Hydrogen Peroxide System

11.9.3.9.1 Function

The Hydrogen Peroxide System provides hydrogen peroxide for valence adjustment of the dissolution solution in the Dechlorination Dissolution and Dissolution Units.

11.9.3.9.2 Description

Hydrogen peroxide is stored in drums in the Reagent Processing Building as a 35% solution. It is mixed with demineralized water in the hydrogen peroxide preparation tank to produce a 10% solution. The 10% solution is pumped to the distribution tank in the AP Area and distributed to all the users by a dosing pump.

Figure 11.9-25 provides a schematic of the Hydrogen Peroxide System.

11.9.3.9.3 Major Components

The major components of the Hydrogen Peroxide System are as follows:

- Hydrogen peroxide preparation tank
- Transfer pumps
- Distribution tank
- Drain tank
- Dosing pump.

11.9.3.9.4 Control Concepts

The control concepts for the Hydrogen Peroxide System are as follows:

- **Hydrogen Peroxide Preparation Tank** – A low-low level in this tank alerts the control room operator and also stops the transfer pumps. A new preparation cycle is started. A preset amount of demineralized water is added to this tank. After the demineralized water valve is fully closed, a preset amount of 35% hydrogen peroxide is added by starting the drum pump. The tank level is monitored at the drum emptying station. The local operator checks the level and checks a sample. If the results of analysis of the sample are found to be correct, the operator in the control room validates the "tank ready" signal, which allows the transfer pump to pump hydrogen peroxide to the distribution tank.
- **Hydrogen Peroxide Distribution Tank** – A low level in the distribution tank starts the transfer pumps to fill this tank. A high level in the distribution tank stops the transfer pumps to prevent overfilling. A low-low level in the distribution tank stops the dosing pump and starts the transfer pump to fill up this tank. After a sufficient amount is transferred, the transfer pump is stopped. The level is monitored in the control room.
- **Hydrogen Peroxide Drain Tank** – The drain tank collects piping low point drains and leaks and any leaks to the Hydrogen Peroxide Preparation tank drip pan. A high level warning notifies the operator when the Drain Tank is full. It is emptied to waste drums for disposal.
- **MOX Fuel Fabrication Building Isolation** – The Hydrogen Peroxide penetrations into the MOX Fuel Fabrication Building are provided with double isolating valves to automatically isolate during a seismic event.

11.9.3.9.5 System Interfaces

The Hydrogen Peroxide System interfaces with the following:

- Dechlorination Dissolution and Dissolution Units
- Demineralized Water System
- Hydroxlamine Nitrate Unit
- Normal and Standby Power Supply
- Seismic detectors, which provide a signal to automatically isolate the hydrogen peroxide fluid penetrations into the MOX Fuel Fabrication Building during a seismic event.

11.9.3.10 Hydrazine System

11.9.3.10.1 Function

The Hydrazine System supplies hydrazine hydrate for the preparation of hydrazine nitrate. Hydrazine nitrate is mixed with hydroxylamine nitrate and used in the Purification Cycle.

Hydrazine is also mixed with sodium hydroxide to scrub chlorine containing offgases from Dechlorination Dissolution Unit.

11.9.3.10.2 Description

Hydrazine is stored as 35% hydrazine hydrate in totes in the Reagent Processing Building. It is pumped to a storage tank from the tote. From the storage tank, it is pumped to hydrazine nitrate reactors and to the hydrazine/NaOH preparation tank. The two hydrazine nitrate reactors are used in parallel. In the reactors, hydrazine hydrate reacts with a 13.6N nitric acid to form hydrazine nitrate. The reactors are cooled with process chilled water to remove the heat of reaction. The hydrazine nitrate overflows to the hydrazine nitrate mixing reactor, where it is mixed with 13.6N nitric acid and demineralized water to produce a solution of 4M hydrazine nitrate and 1N nitric acid. The solution is pumped to the 0.15M hydroxylamine nitrate preparation tank. In the hydrazine/NaOH tank, hydrazine is mixed with 10N NaOH to generate a mixture of 0.165M hydrazine and 0.7 M NaOH solution. This solution is pumped to the nitrogen blanketed hydrazine/NaOH buffer tank located in the AP area and is distributed to Dechlorination Dissolution users by pump. All the vessels, with the exception of the hydrazine/NaOH buffer tank, are located in the Reagent Processing Building. The Reagent Building hydrazine vessels are provided with nitrogen blanketing for inerting purposes and the vapors from the vessels are sent to hydrazine vapor stripping column CLMN1000, where they are scrubbed with hydrogen peroxide and routed to the main stack for atmospheric venting. The hydrazine/NaOH buffer tank is vented to hydroxylamine nitrate column CLMN 084.

Figure 11.9-26 provides a schematic of the Hydrazine System.

11.9.3.10.3 Major Components

The major components of the Hydrazine System are as follows:

- Hydrazine hydrate storage tank
- Hydrazine hydrate pumps
- Hydrazine nitrate preparation reactors
- Hydrazine nitrate mixing reactor
- Hydrazine nitrate pumps
- Hydrazine/NaOH preparation tank
- Hydrazine/NaOH buffer tank
- Hydrazine vapor stripping column

11.9.3.10.4 Control Concepts

The control concepts for the Hydrazine System are as follows:

- When low level is reached in the hydrazine hydrate storage tank, the 35% hydrazine hydrate pumps are turned off and the control room operator is notified. The control room operator asks the local operator to transfer 35% hydrazine hydrate from the tote into the storage tank. The storage tank level is monitored locally at the tote emptying station.

- Hydrazine nitrate is prepared by mixing 35% hydrazine hydrate and 13.6N nitric acid. This process is carried out in two reactors. The local operator starts the pumps supplying nitric acid and hydrazine hydrate and then opens the inlet valves. The hydrazine nitrate formed overflows into the mixing reactor. The temperature in the reactors is monitored. The reactors are cooled with chilled water.
- The hydrazine nitrate mixing reactor receives hydrazine nitrate from two reactors. The local operator sends a sample to the laboratory for analysis. Based on the results he then determines the quantities of water and nitric acid to be added to the solution to obtain the desired concentration. The local operator starts the mixer, adds the reagents, and takes a final sample and sends this to the laboratory. When the analysis confirms the mix, the local operator then notifies the control room operator, who validates the "tank ready" signal, enabling the transfer to the Hydroxylamine Nitrate System.
- When low level is reached in the hydrazine/NaOH storage tank, the hydrazine/NaOH pumps are turned off and the control room operator is notified. The control room operator adds a premeasured amount of demineralized water, by opening the control valve. After the demineralized water valve closes, the hydrazine hydrate pump is started to transfer 35% hydrazine hydrate from the hydrazine hydrate storage tank. The storage tank level is monitored by level control and stops the transfer pump on high level. Similarly the hydrazine/NaOH buffer tank is instrumented with level controls to notify the operator that the tank level is low ,whereupon he transfers the pre-mixed hydrazine/NaOH solution to the hydrazine/NaOH buffer tank. A high level in the hydrazine/NaOH buffer tank stops the hydrazine/NaOH transfer pump.
- The hydrazine vapor stripping column is provided for scrubbing the vents from all the hydrazine system tanks and reactors in the Reagent Building. The tower is periodically fed with a 5% hydrogen peroxide fresh makeup from a bottle. The vents are drawn through the column via the HAN stripping column fan under manual butterfly valve draft control. The column blowdown is periodically routed to the hydrazine and HAN effluents storage tank TK-1110. Samples of the column scrubbing liquor are taken periodically and sent to the laboratory for analysis. The results of the analysis determine the hydrogen peroxide make-up and scrubber blowdown frequencies.
- **MOX Fuel Fabrication Building Isolation** – The hydrazine penetrations into the MOX Fuel Fabrication Building are provided with double isolation valves to automatically isolate during a seismic event.

11.9.3.10.5 System Interfaces

The Hydrazine System interfaces with the following:

- Hydroxylamine Nitrate System
- Sodium Hydroxide System
- Demineralized Water System
- Dechlorination Dissolution Unit

- Nitric Acid System
- Nitrogen System
- Normal and Standby Power Supply
- Seismic detectors, which provide a signal to automatically isolate the hydrazine fluid penetrations into the MOX Fuel Fabrication Building during a seismic event.

11.9.3.11 Manganese Nitrate System

11.9.3.11.1 Function

The Manganese Nitrate System provides manganese nitrate to be used as a catalyst in the Oxalic Precipitation and Oxidation Cycle Unit.

11.9.3.11.2 Description

Concentrated solution of manganese nitrate is stored in cans in the AP Area. The concentrated manganese nitrate solution is mixed with 13.6N nitric acid in a preparation tank equipped with an agitator to form a 0.02M manganese nitrate solution. Manganese nitrate from the preparation tank is transferred to a buffer pot that feeds the Oxalic Precipitation and Oxidation Cycle Unit. The Manganese Nitrate system is located in the AP Area.

Figure 11.9-27 provides a schematic of the Manganese Nitrate System.

11.9.3.11.3 Major Components

The major components of the Manganese Nitrate System are as follows:

- **Preparation Tank** – Concentrated manganese nitrate solution stored in cans is mixed with 13.6N nitric acid in the preparation tank to form 0.02M manganese nitrate. The preparation tank is equipped with an agitator to assist in mixing.
- **Buffer Pot** – 0.02M manganese nitrate is transferred to the Oxalic Precipitation and Oxidation Unit from the buffer pot for use as a catalyst in recovery of the oxalic mother liquors.

11.9.3.11.4 Control Concepts

The control concepts for the Manganese Nitrate System are as follows:

- When the manganese nitrate preparation tank is nearly empty, the supply to the buffer pot is automatically closed and the operator in the control room is warned. This starts a new preparation cycle.
- At the start of the new preparation cycle, the operator opens the valve in the 13.6N nitric acid line. When the preparation tank fills up to a predetermined level with nitric acid, the valve closes automatically and the operator receives indication that nitric acid addition to the vessel has ceased.

- The operator then adds concentrated manganese nitrate solution to the vessel. The operator monitors the level in the preparation tank and stops manganese nitrate addition when the appropriate quantity has been added. The operator starts the preparation tank stirrer that runs for a preset duration and then stops. The tank is sampled to verify that the desired material concentration has been prepared. When the sample is verified correct, the operator validates a "tank ready" signal, which disables the stirrer and opens the feed to the buffer pot.

11.9.3.11.5 System Interfaces

The Manganese Nitrate System interfaces with the following:

- Nitric Acid System
- Oxalic Precipitation and Oxidation Unit
- Normal and Standby Power Supply.

11.9.3.12 Decontamination System

11.9.3.12.1 Function

The Decontamination System supplies a nitric acid solution for the decontamination of process equipment in the AP process.

11.9.3.12.2 Description

The decontamination solution is prepared by mixing 13.6N nitric acid and demineralized water in the decontamination solution tank in the AP Area. The decontamination solution is pumped by transfer pumps to supply the process users. For ease of distribution, some gloveboxes may be fed from local buffer vessels installed above the gloveboxes.

Figure 11.9-28 provides a schematic of the Decontamination System.

11.9.3.12.3 Major Components

The major components of the Decontamination System are as follows:

- Decontamination solution preparation tank
- Transfer pumps

11.9.3.12.4 Control Concepts

The control concepts for the Decontamination System are as follows:

- **Decontamination Solution Preparation Tank** – The demineralized water and nitric acid valves are closed on high level. On low level, the transfer pumps are shut down and the mixer is stopped. The tank is protected with an overflow to Acid Recovery Unit Tank and is vented to the Nitric Acid Unit gas stripping column.

- **MOX Fuel Fabrication Building Isolation** – The decontamination fluid penetrations into the MOX Fuel Fabrication Building are provided with double isolation valves to automatically isolate during a seismic event.

11.9.3.12.5 System Interfaces

The Decontamination System interfaces with the following:

- Dissolution Unit
- Dechlorination Dissolution Unit
- Purification Cycle
- Solvent Recovery Unit
- Homogenization Unit
- Oxalic Mother Liquor Recovery Unit
- Oxalic Precipitation and Oxidation Unit
- Uranium Dissolution Unit
- Acid Recovery Unit
- Nitric Acid System
- Demineralized Water System
- Liquid Waste Reception Unit
- Offgas Treatment Unit
- Normal and Standby Power Supply
- Seismic detectors, which provide a signal to automatically isolate the fluid penetrations into the MOX Fuel Fabrication Building during a seismic event.

11.9.3.13 Nitrogen Oxide System

11.9.3.13.1 Function

The Nitrogen Oxide System provides nitrous fumes (nitrogen dioxide + nitrogen tetroxide) for the AP process to remove hydrazine and hydroxylamine nitrate from the plutonium nitrate stream via an oxidation reaction in the Purification Cycle.

11.9.3.13.2 Description

Dinitrogen tetroxide (N_2O_4) liquid is stored in two 1-ton cylinders. One cylinder is in operation, and the second cylinder is a spare. Instrument air is injected into the cylinder to transfer the liquid into an electric boiler where it is vaporized.

The vapor is mixed with instrument air and heated by electric tracing to 122°F (50°C) to avoid problems associated with condensation of NO_x from the boiler.

Vessels/components are segregated/separated from incompatible chemicals. Since nitrogen oxide is an oxidizer and is incompatible with hydrazine, nitrogen oxide is segregated from hydrazine. NO_x detectors are installed in rooms where nitrous fumes could be present. The presence of workers in these rooms is occasional, and access should be authorized after checking the NO_x concentration in the room.

Figure 11.9-29 provides a schematic of the Nitrogen Oxide System.

11.9.3.13.3 Major Components

The major components of the Nitrogen Oxide System are as follows:

- Nitrogen oxide storage tanks
- Electric boiler for nitrogen oxide.

11.9.3.13.4 Control Concepts

The control concepts for the Nitrogen Oxide System are as follows:

- **Nitrogen Oxide Storage Tanks** –The bulk liquid nitrogen oxide storage tanks are provided with weight indication and alarms. When one tank is empty, an alarm sounds to switch tanks. The switching is done manually by the local operator. The liquid level in the cylinder controls instrument air supply pressure to the cylinder. Service air pressure is increased as liquid level decreases.
- **Electric Boiler for Nitrogen Oxide** – The electric boiler feed is controlled by level. The boiler is provided with high- and low-level alarms to avoid flooding or overheating. Controlling the heat input controls the boiler pressure.
- **Nitrogen Oxide Distribution** – The nitrogen oxide is mixed with equal volumes of instrument air for distribution. The electrical tracing (downstream of the boiler) is provided with automatic temperature controls and high and low temperature alarms.
- **MOX Fuel Fabrication Building Isolation** – The Nitrogen Oxide fluid penetrations into the MOX Fuel Fabrication Building are provided with double isolating valves to automatically isolate during a seismic event.

11.9.3.13.5 System Interfaces

The Nitrogen Oxide System interfaces with the following:

- Purification Cycle
- Instrument Air System
- Normal and Standby Power Supply
- Seismic detectors, which provide a signal to automatically isolate the fluid system penetrations into and out of the MOX Fuel Fabrication Building during a seismic event.

11.9.3.14 Aluminum Nitrate System

11.9.3.14.1 Function

Aluminum nitrate added to the Purification Unit to prevent fluorine leakage in the solvent phase to the Pu stripping column PULS 3000.

11.9.3.14.2 Description

A mixture of 1.5 N nitric acid and aluminum nitrate are mixed in the laboratory resulting in a solution with 1.2 g/l aluminum content. The mixture is added to the aluminum nitrate buffer tank TK-1450. Aluminum nitrate consumption is about 5 gallons per week. The aluminum nitrate solution is transferred by dosing pump to Purification Cycle seal pot KPA-TK-1042

11.9.3.14.3 Major Components

The major components of the Aluminum Nitrate System are as follows:

- Aluminum Nitrate Buffer Tank
- Aluminum Nitrate Dosing Pump

11.9.3.14.4 Control Concepts

The control concepts for the aluminum nitrate system are as follows:

- Aluminum nitrate solution is prepared in the laboratory and analyzed for correct composition. It is transferred manually to KPA-TK-1450 where the operator monitors the filling operation using the local level indicators. A low level alarm notifies the lab operator when a new batch is required.
- Aluminum nitrate flow to KPA-TK-1042 is controlled by dosing pump. The aluminate nitrate is fed for 10 seconds each minute into the seal pot which is continually fed with 1.5 N nitric acid.

11.9.3.14.5 System Interfaces

The Aluminum Nitrate System Interfaces with the following:

- Normal Power Supply
- Nitric Acid System
- Purification Cycle

11.9.3.15 Zirconium Nitrate System

11.9.3.15.1 Function

Zirconium nitrate is added to the process to avoid fluoride corrosion of titanium vessels in the Purification Cycle and Acid Recovery unit by complexing the fluoride with zirconium.

11.9.3.15.2 Description

The zirconium nitrate solution is pump from drums to a zirconium preparation tank where the zirconium nitrate is prepared as a 10 g/l zirconium concentration in a 3.5 N nitric acid solution. The tank is a nominal 40 gallon tank located in the Reagents Processing Building. The tank includes a stirrer and sampling nozzles to confirm concentrations. The solution is then pumped to a 40 gallon zirconium nitrate buffer tank in the Aqueous Polishing Building. Usage of zirconium nitrate solution is about 30 gallons per week..

The zirconium solution is supplied to the KPA raffinates TK9000 and to the KPC system where it is further in line diluted with demineralized water to form a very dilute (150 mg/l) solution that is fed to the Acid Recovery Unit evaporator EV2000.

11.9.3.15.3 Major Components

The major components of the Zirconium Nitrate System are as follows:

- Zirconium Nitrate Preparation Tank
- Zirconium Nitrate Buffer Tank
- Zirconium Nitrate Transfer Pump

11.9.3.15.4 Control Concepts

The control concepts for the Zirconium Nitrate System are as follows:

- The zirconium nitrate buffer tank is equipped with a low-level alarm to alert the operator to prepare a new batch. The dosing pump is turned off on low-low level in this tank.
- The zirconium nitrate buffer tank is equipped with a low-level switch, which starts the transfer pump to fill up this tank. A high level in this tank stops the transfer pump.
- Zirconium nitrate/nitric acid solutions may be available in drums in a 20 wt% solution zirconium in nitric acid concentration or available in 10g/l zirconium that will require no further adjustment. The following concept is based on the 20 wt% solution zirconium in nitric acid but may change as the availability of the reagent becomes clear.
- When the level in the zirconium nitrate preparation tank is low, the control valve at the outlet of the tank is closed and the control room operator is notified. The control room operator issues a command to open the demineralized water valve. After a preset amount of demineralized water is added to the tank, the valve closes. The nitric acid valve opens

after the demineralized valve is fully closed. A preset amount of acid is added. The acid addition valve closes and a preset amount of zirconium nitrate solution is pumped to the preparation tank. The mixer is on during this operation. The local operator takes a sample from the tank and sends it to the laboratory for analysis. If the results of sample analysis are found to be correct, the local operator notifies the control room operator. The control room operator then allows the automation process to continue to send the zirconium nitrate solution to users.

- MOX Fuel Fabrication Building Isolation – The zirconium nitrate penetrations into the MOX Fuel Fabrication Building are provided with double isolation valves to automatically isolate during a seismic event.

11.9.3.15.5 System Interfaces

The major components of the Zirconium Nitrate System are as follows:

- Normal and standby Power Supply
- Demineralized Water System
- Acid Recovery
- Nitric Acid System
- Purification Cycle
- Seismic detectors, which provide a signal to automatically isolate the fluid system penetrations into the MOX Fuel Fabrication Building during a seismic event

11.9.4 Design Basis for Non-Principal SSCs

The design basis for non-principal SSCs is a combination of implementation of the design basis parameters provided in Table 11.8-2, FTS Categories 3 and 4 and the codes and standards which are applicable to components in the Mechanical Utility Systems, Bulk Gas Systems, and Reagent Systems.

The following codes and standards will be used in the design of non-principal SSCs

<u>Vessels</u>

- ASME VIII, "Boiler and Pressure Vessel Code, Rules for Construction of Pressure Vessels"
- UL 142, "Steel Aboveground Tanks for Flammable and Combustible Liquids"
- API RP 520, "Sizing, Selection and Installation of Pressure Relieving Devices in Refineries"
- API RP 521, "Guide for Pressure Relieving and Depressurizing Systems."

Pumps

- ANSI /ASME B73.1M, "Specification for Horizontal End Suction Centrifugal Pumps for Chemical Process."

Piping

- ANSI/ASME B31.3, "Process Piping."

Storage Tanks (0-15 psig)

- API 620 (1998), "Design & Construction of Large, Welded, Low Pressure Storage Tanks."

Gases

- CGA G-4, "Oxygen"
- CGA G-5, "Hydrogen"
- CGA G-7, "Compressed Air for Human Respiration"
- CGA G-9 (1998), "Helium"
- CGA G-10 (1997), "Nitrogen"
- CGA G-11 (1998), "Argon"
- CGA P-1, "Safe Handling of Compressed Gases in Containers"
- CGA P-9 (1992), "The Inert Gases Argon, Nitrogen, and Helium"
- CGA S-1.1, "Pressure Relief Device Standards – Part 1 – Cylinders for Compressed Gases"
- CGA S-1.3, "Pressure Relief Device Standards – Part 3 – Cargo and Portable Tanks for Compressed Gases"
- ANSI/ISA S7.0.01-1996, "Quality Standard for Instrument Air"
- NFPA 30, "Flammable and Combustible Liquids Code"
- NFPA 50, "Standard for Bulk Oxygen Systems at Consumer Sites"
- NFPA 50A, "Standard for Gaseous Hydrogen Systems at Consumer Sites"
- NFPA 55 (1998), "Standard for the Storage, Use and Handling of Compressed and Liquefied Gases in Portable Cylinders"
- NFPA 86C, "Standard for Industrial Furnaces Using a Special Processing Atmosphere."

Oxidizers

- NFPA 430, "Code for Storage of Liquid and Solid Oxidizers."

Diesel Generator Fuel Oil

- ANSI/ANS 59.51-1997, "American Nuclear Society Fuel Oil Systems for Safety Related Emergency Diesel Generators"
- API 620 (1998), "Design & Construction of Large, Welded, Low Pressure Storage Tanks"
- NFPA 30 (1996), "Flammable and Combustible Liquids Code"
- NFPA 37 (1998), "Standards for the Installation and Use of Stationary Combustion Engines and Gas Turbines"
- UL 142, "Steel Aboveground Tanks for Flammable and Combustible Liquids."
- NFPA 110, "Standard for Emergency and Standby Power Systems"

Seismic

Conventional seismic CS or SC-2 as applicable

11.9.5 Design Basis for Principal SSCs

The design basis for principal SSCs are as defined by design basis parameters listed in Table 11.8.2 and the design basis codes and standards as defined by FTS categories 1 and 2.

11.9.5.1 Scavenging Air

Normal Operation

Equipment containing high plutonium concentration solutions such as the electrolyzers, and tanks upstream and downstream from the Purification Cycle can generate hydrogen vapor via radiolysis.

During normal operation, the Instrument Air System (-40°C dew point) provides bubbling air to level instrumentation in process vessels (including those that contain Pu). So that during normal operation, this level instrumentation bubbling air also functions as the scavenging air to keep the vessel vapor space hydrogen composition to less than or equal to 1.0 vol%.

Loss of Instrument Air

During an emergency or loss of normal Instrument Air, the Emergency Scavenging Air subsystem portion of the Instrument Air System fulfills the scavenging air function to those vessels that radiolysis hydrogen generation can produce enough hydrogen to reach more than 4 vol% hydrogen in the vessel's vapor space in seven days or less.

For the vessels that can reach more than 4 vol% hydrogen in seven days or less sufficient air is provided such that an explosive condition does not occur. The system consists of two independent trains. Each train of the emergency scavenging bottled air system contains sufficient air to dilute the hydrogen concentration in the vapor spaces of supplied vessels to ≤ 1% hydrogen

for seven days. A seven day period allows the necessary steps to be taken to restore the dilution air supply to all items of equipment subject to radiolysis risk.

The emergency pressurized air supply tanks and piping are seismically qualified in accordance with Section 11.

11.9.5.2 Pressure Vessel Controls

Pressure vessels for mechanical utility systems, reagent systems, bulk gas systems, breathing air systems, service air and instrument air systems which may be subject to overpressurization events and impact primary confinements, are designed such that their location in the facility is located away from principal SSCs or are otherwise protected such that failure of the non-principal SSC's will have no impact on the principal SSCs and ensure that primary confinements are protected.

11.9.5.3 Emergency Diesel Generator Fuel Oil System

The Design Basis for the Emergency Diesel Generator Fuel Oil System is described in Section 11.5.7.

This page intentionally left blank

Figures

This page intentionally left blank.

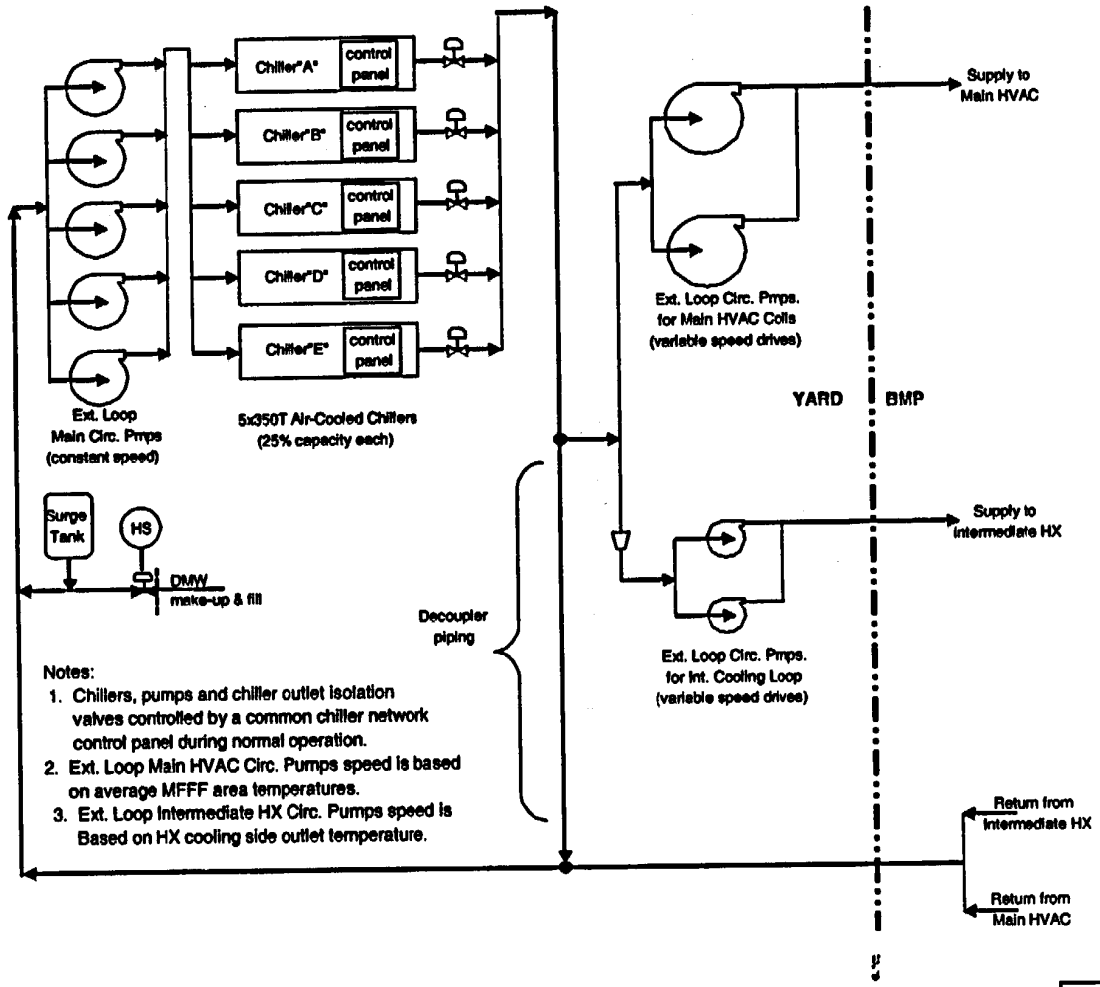

Building and System Designations are found in Table 11.0-1

Figure 11.9-1. HVAC Chilled Water System Sheet 1

This page intentionally left blank.

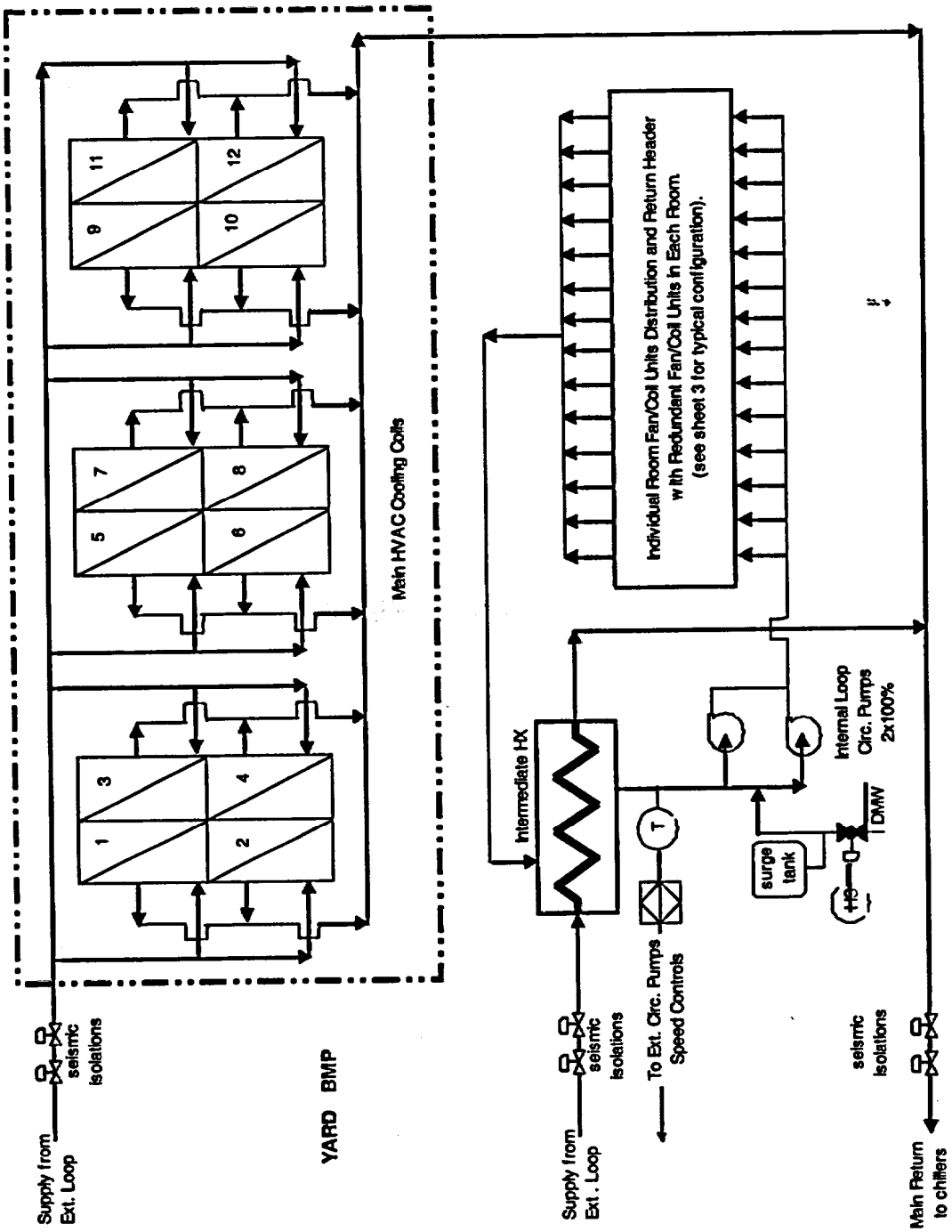

Figure 11.9-1. HVAC Chilled Water System Sheet 2

This page intentionally left blank.

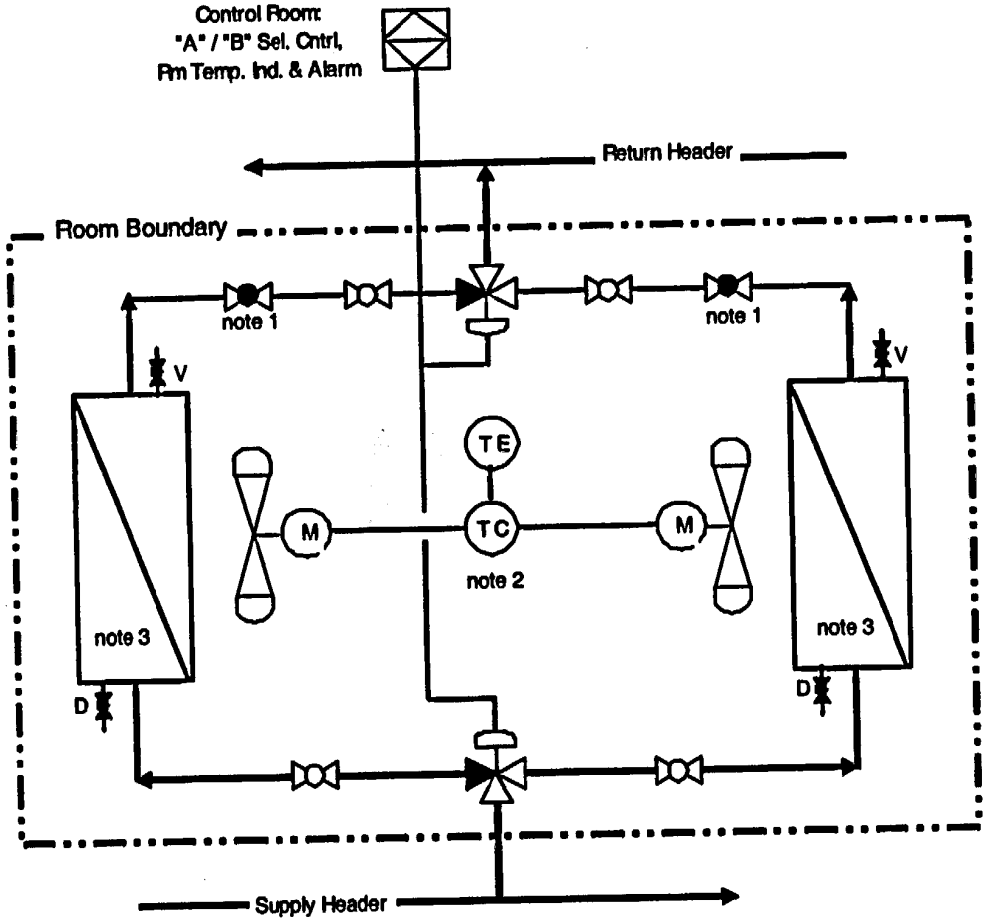

Notes: 1. Throttled to fan coil flow requirements.
2. Local room thermostat & fan controller
3. Fan/Coil Units arw 2x100% capacity.

Building and System Designations are found in Table 11.0-1

Figure 11.9-1. HVAC Chilled Water System Sheet 3

This page intentionally left blank.

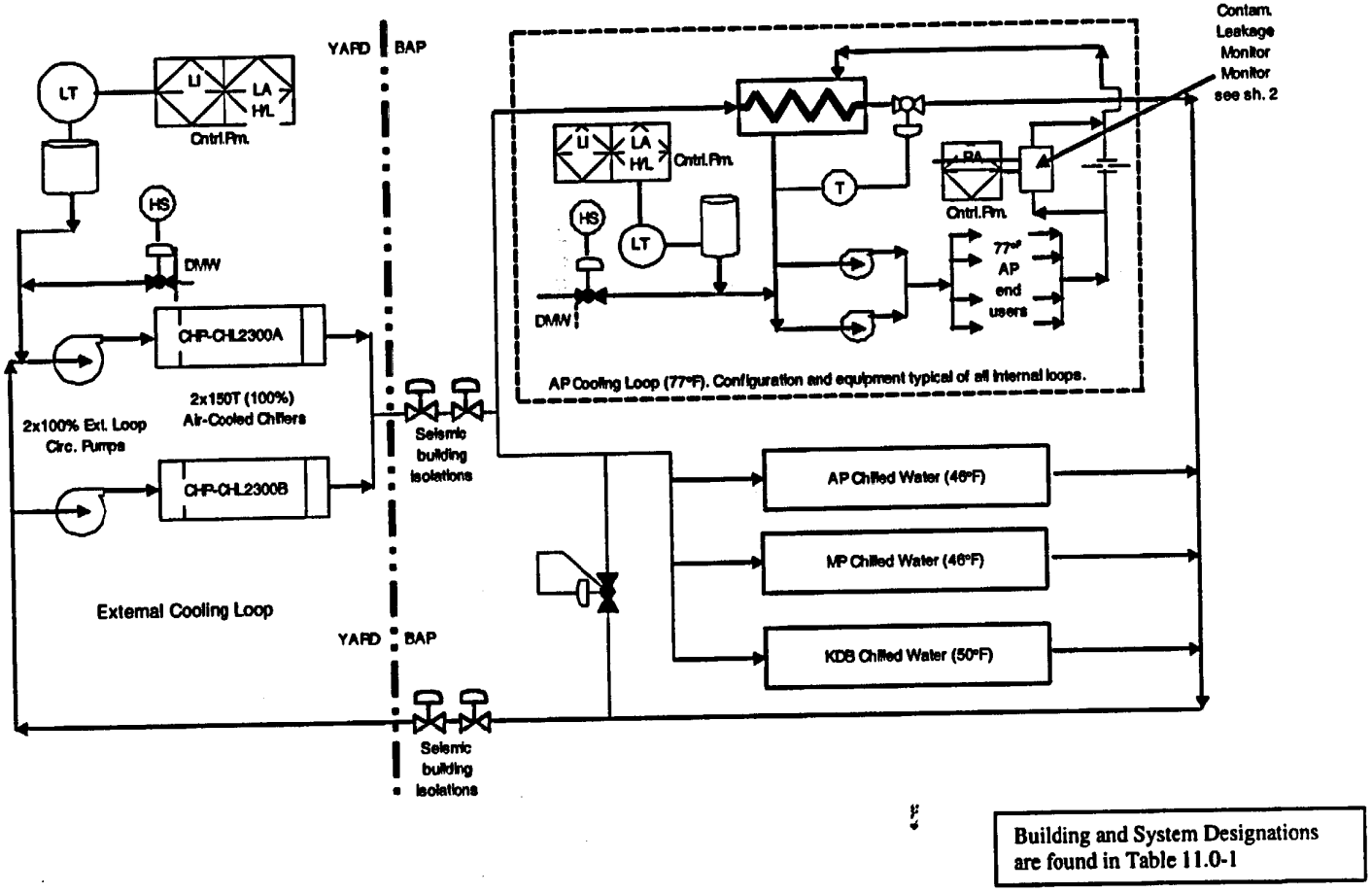

Building and System Designations are found in Table 11.0-1

Figure 11.9-2. Process Chilled Water System Sheet 1

This page intentionally left blank.

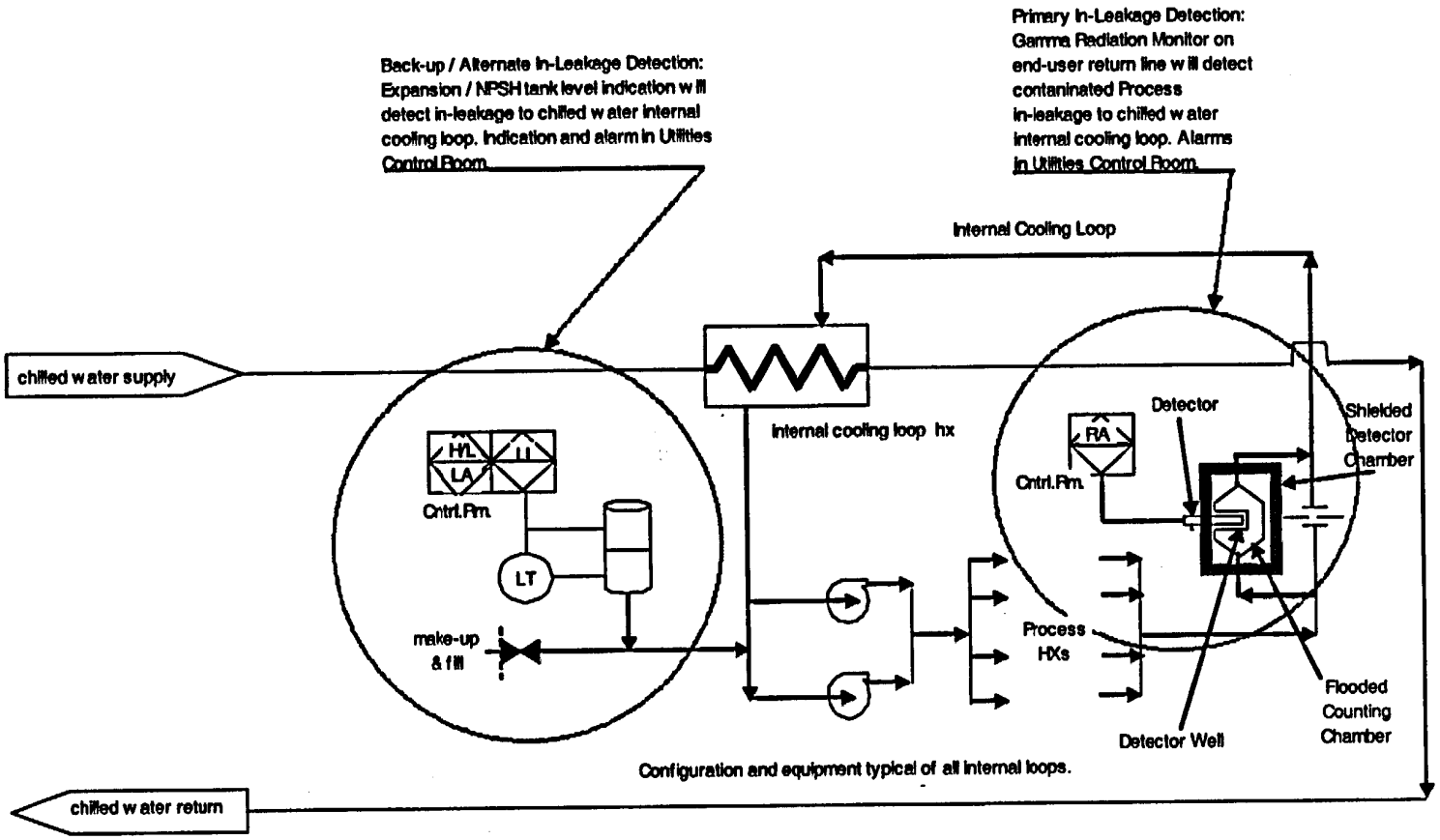

Figure 11.9-2. Process Chilled Water System Sheet 2

Building and System Designations are found in Table 11.0-1

This page intentionally left blank.

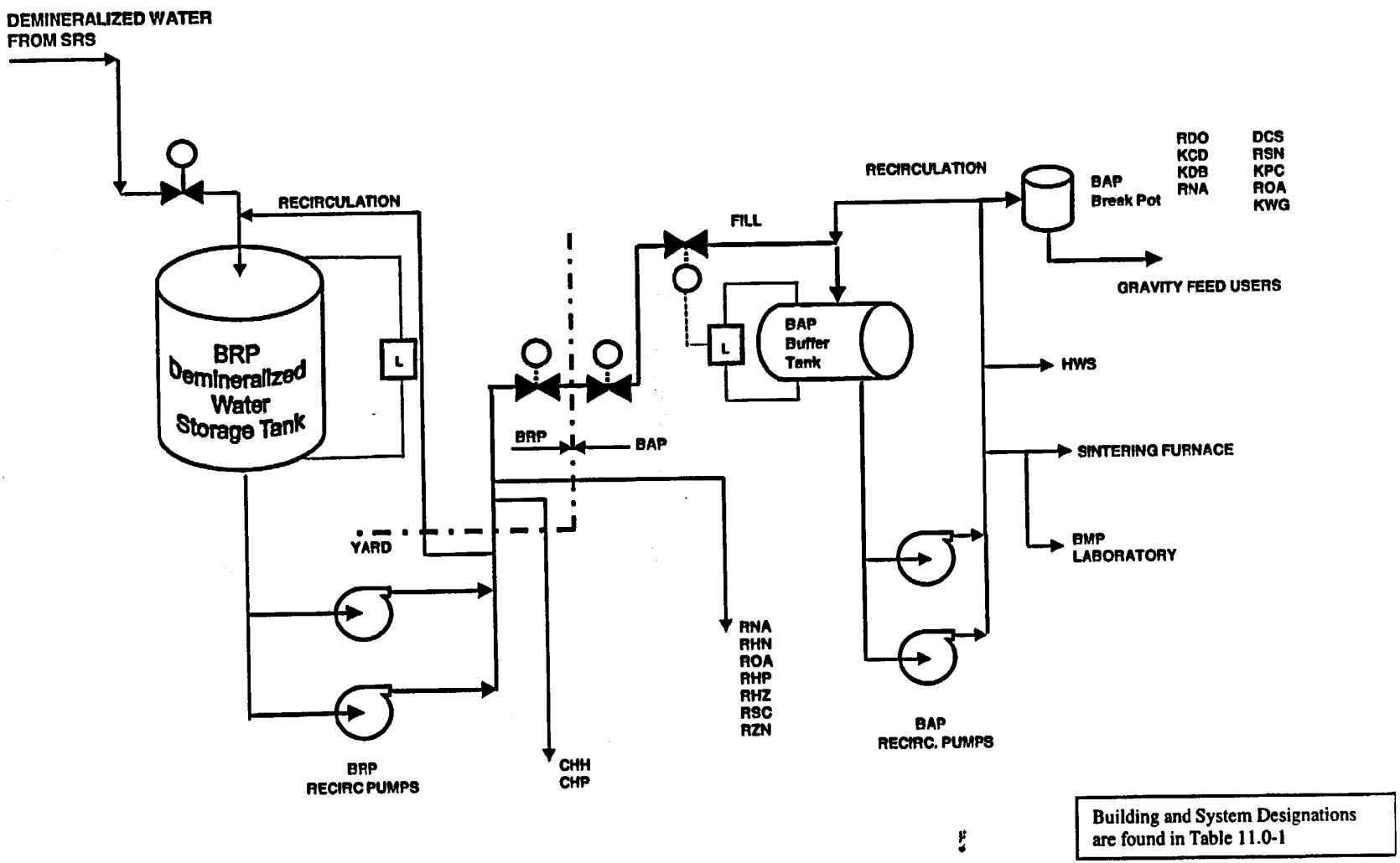

Figure 11.9-3. Demineralized Water System

This page intentionally left blank.

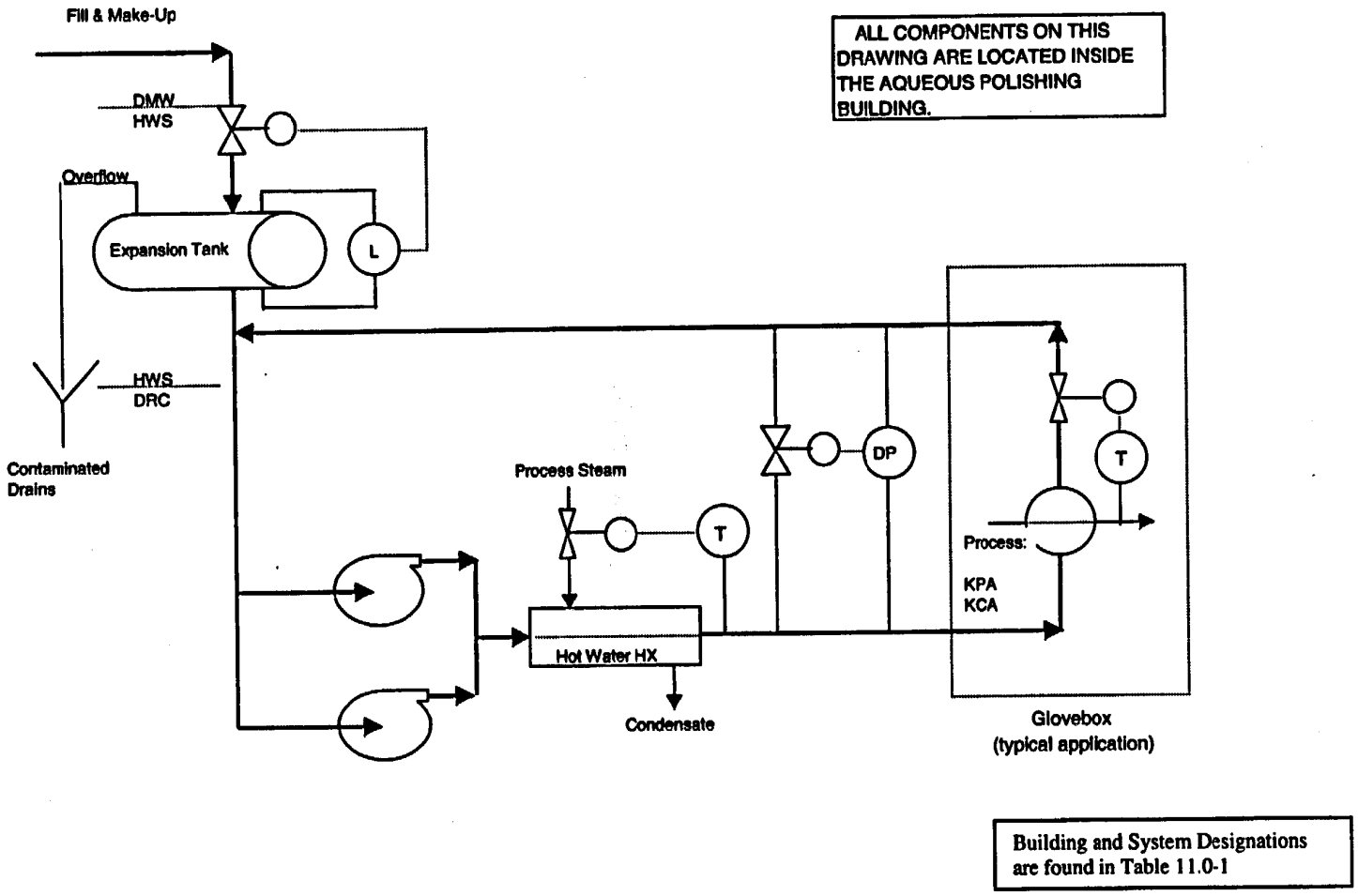

Figure 11.9-4. Process Hot Water System

This page intentionally left blank.

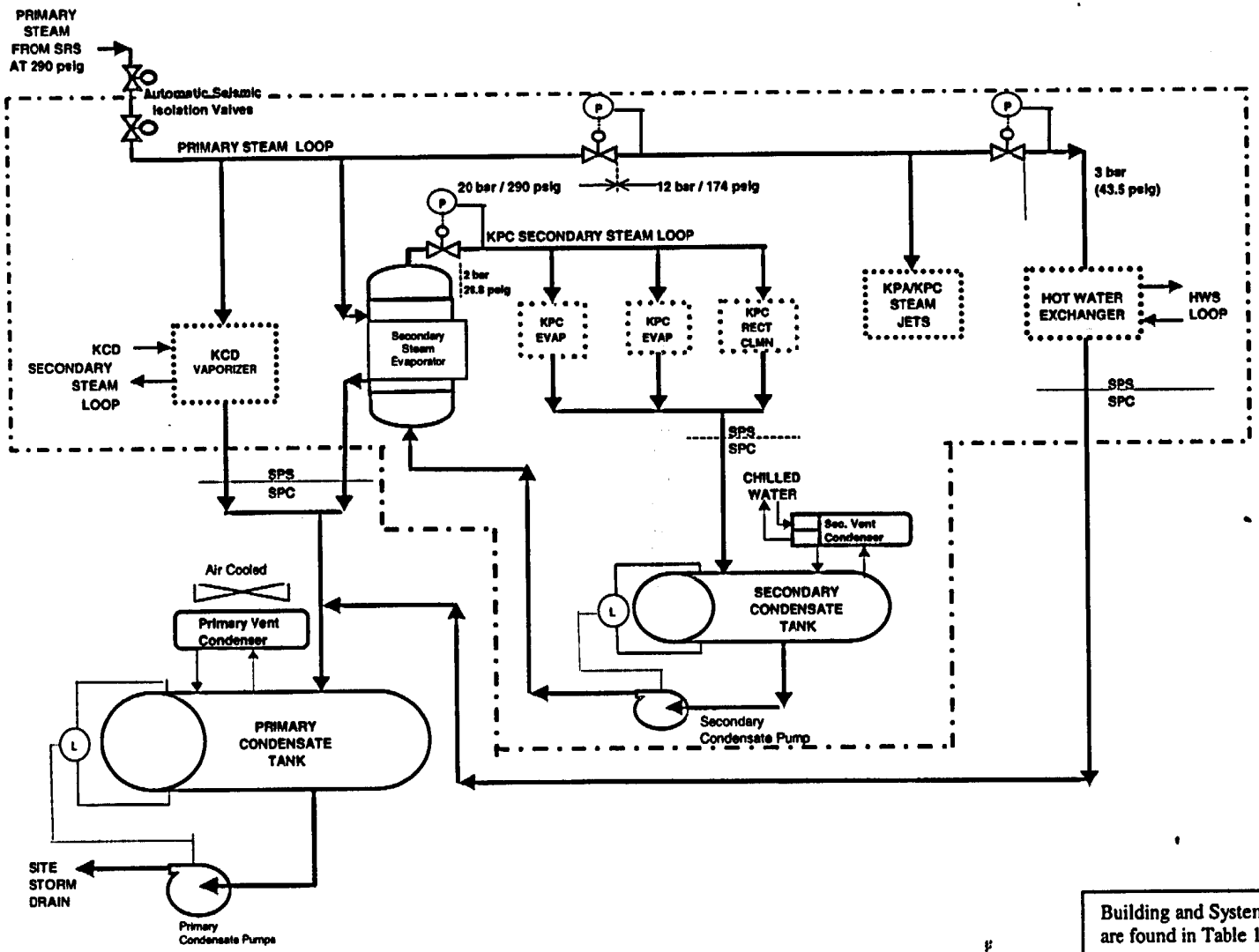

Building and System Designations are found in Table 11.0-1

Figure 11.9-5. Process Steam and Process Condensate Systems

This page intentionally left blank.

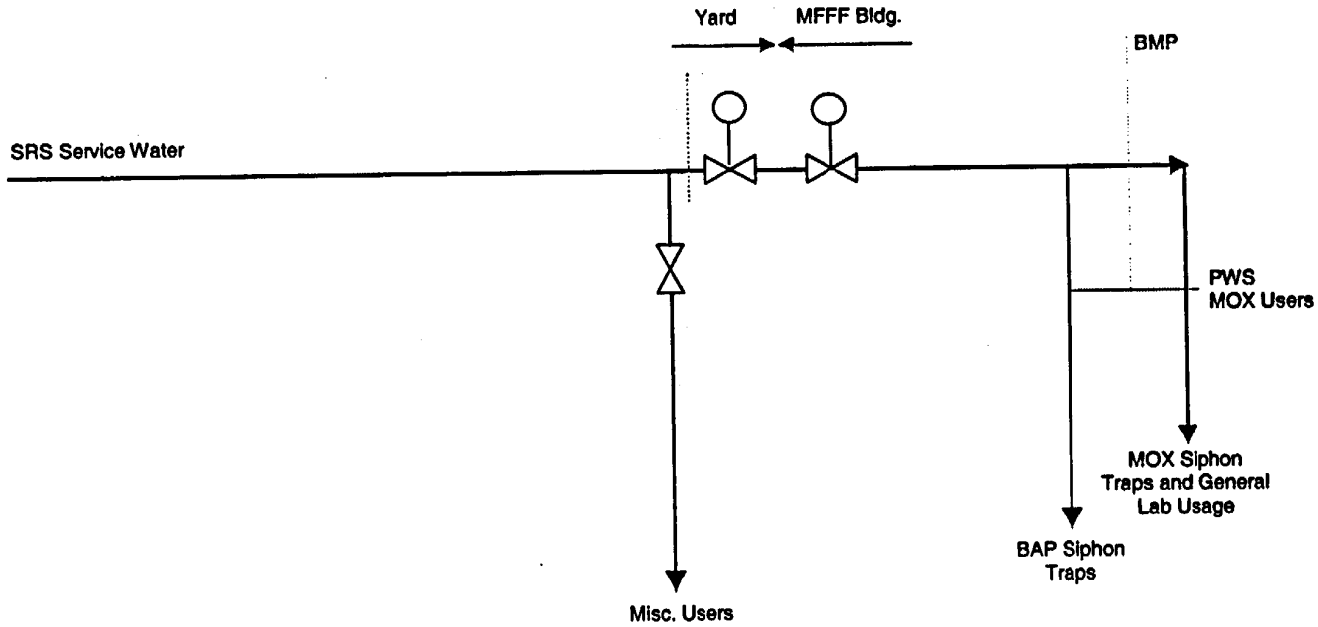

Building and System Designations are found in Table 11.0-1

Figure 11.9-6. Plant Water System

This page intentionally left blank.

[THIS PAGE INTENTIONALLY LEFT BLANK.]

This page intentionally left blank.

[THIS PAGE INTENTIONALLY LEFT BLANK.]

This page intentionally left blank.

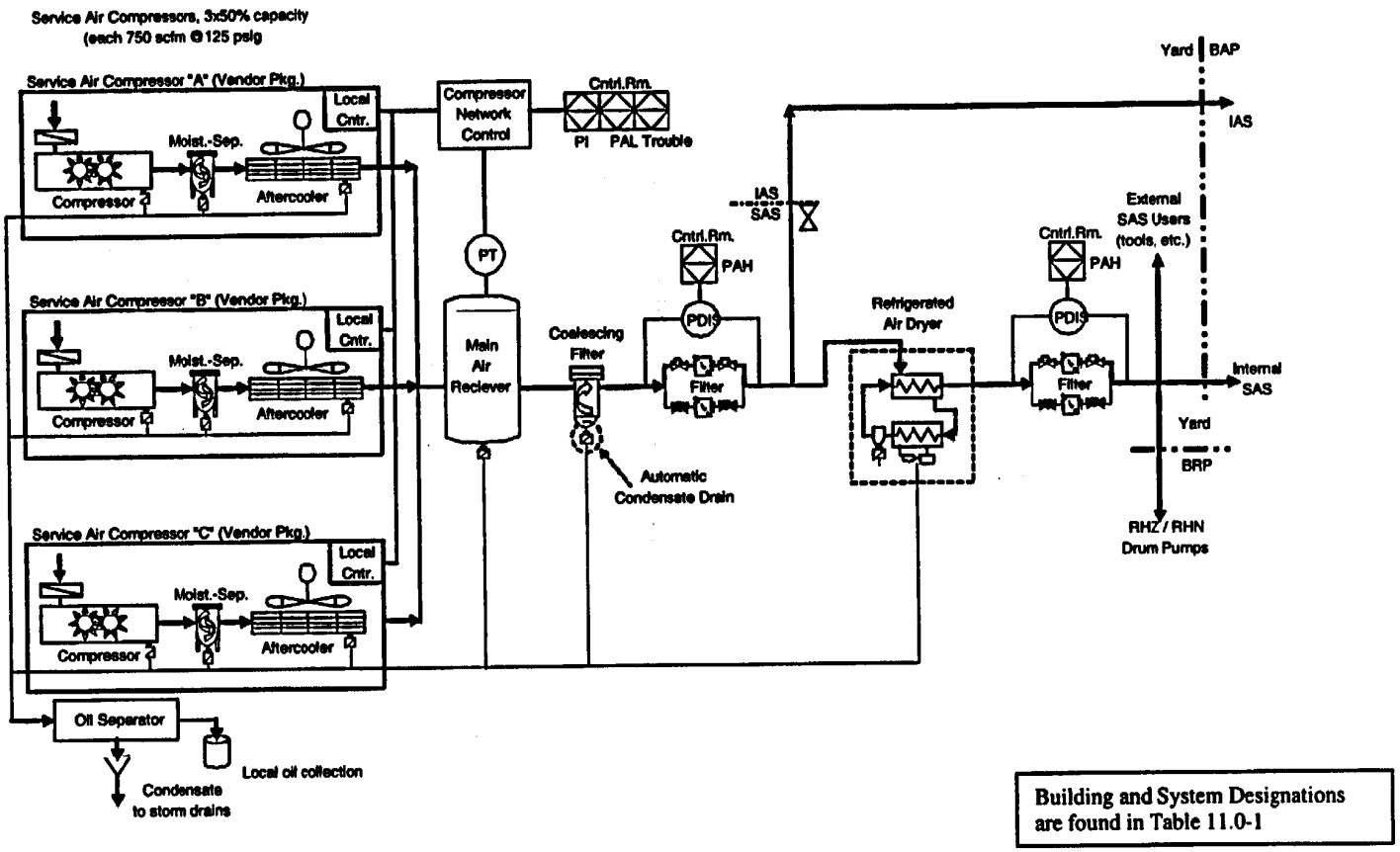

Figure 11.9-9. Service Air System Sheet 1

This page intentionally left blank.

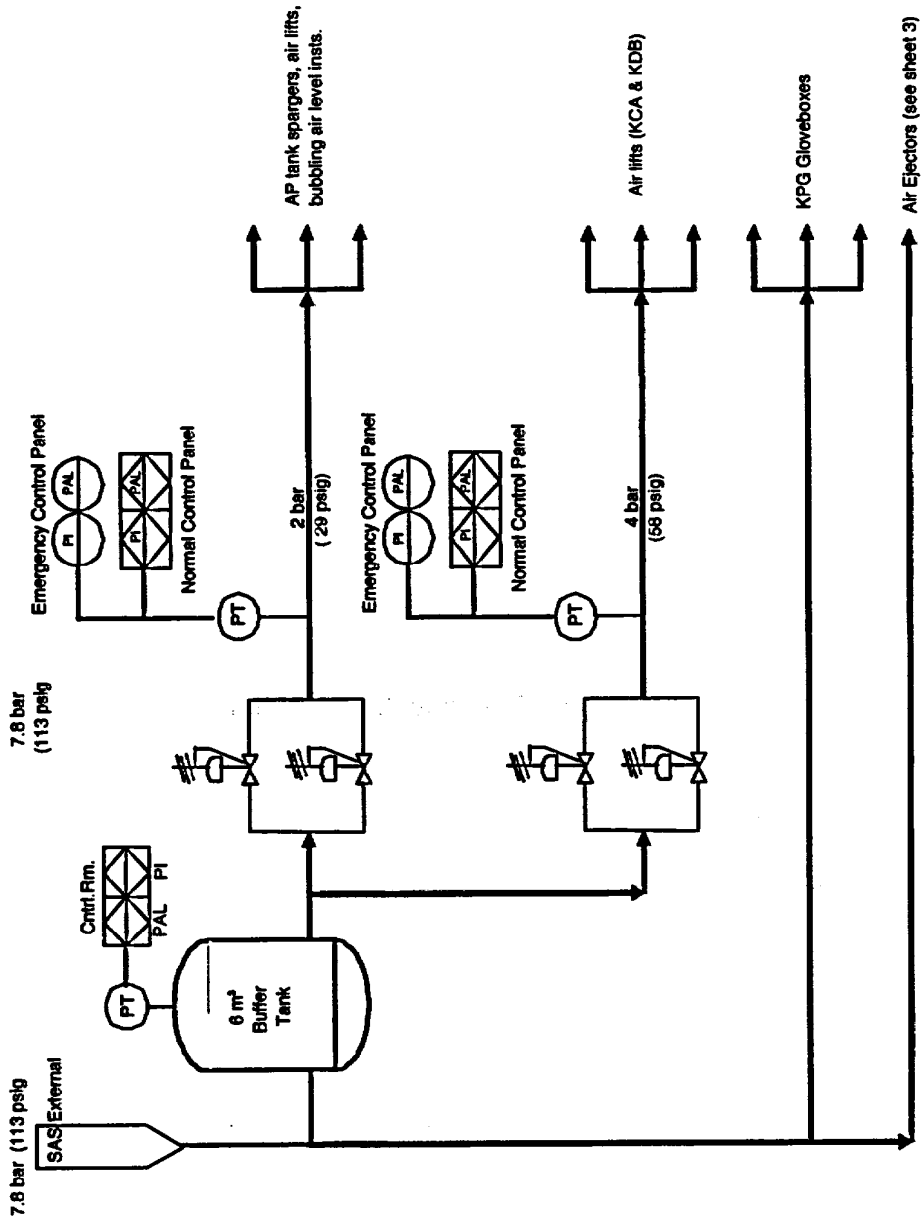

Figure 11.9-9. Service Air System Sheet 2

This page intentionally left blank.

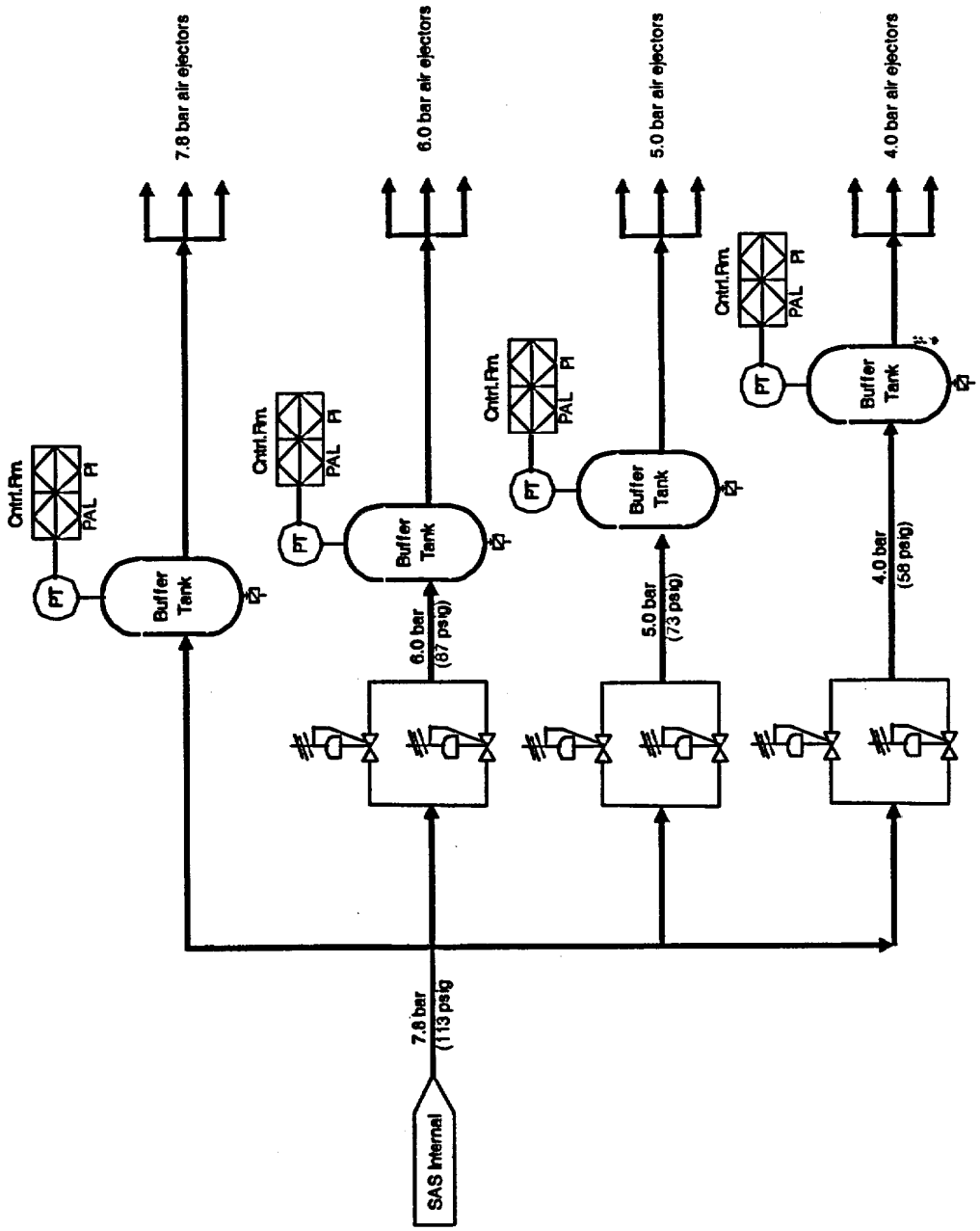

Figure 11.9-9. Service Air System Sheet 3

This page intentionally left blank.

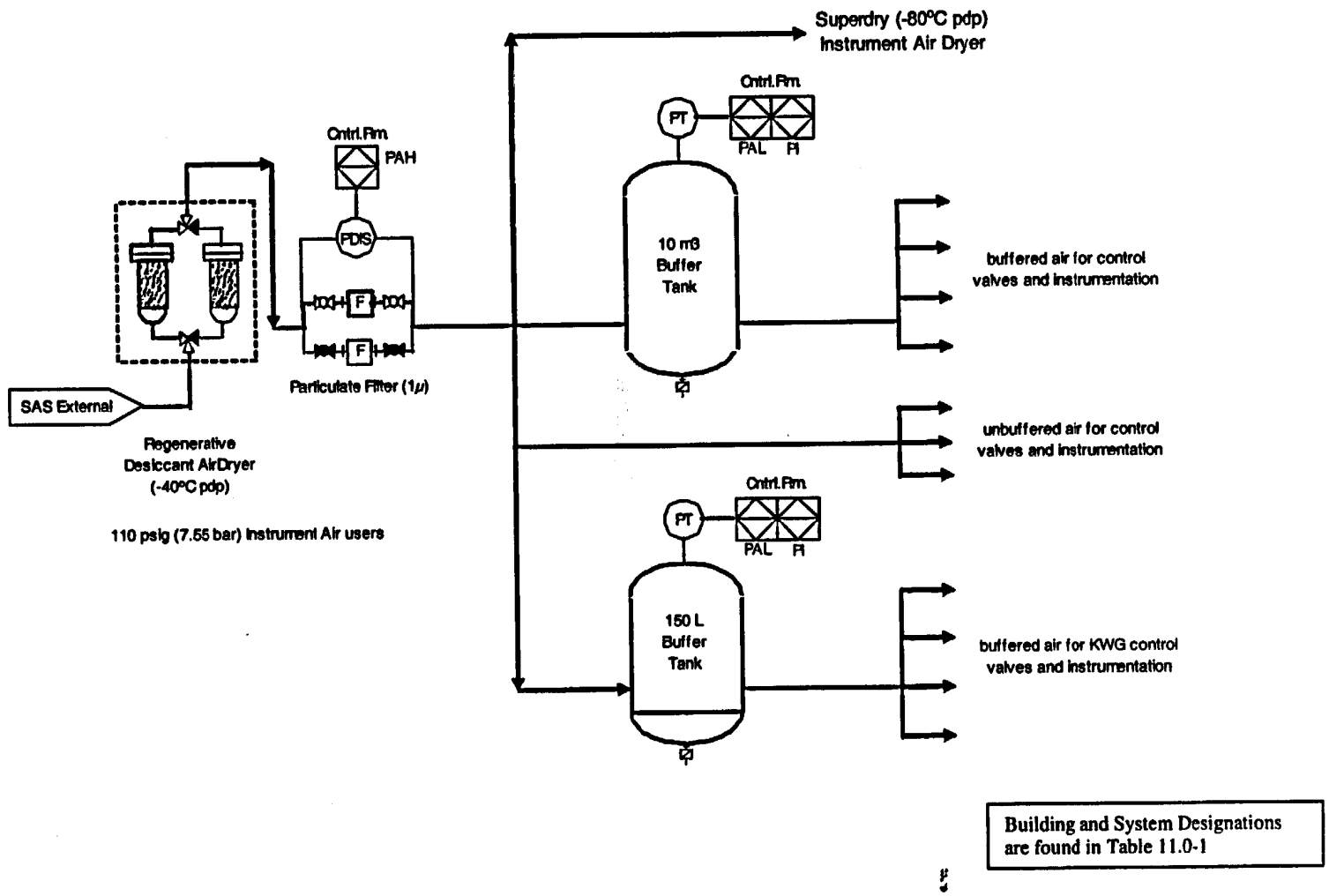

Figure 11.9-10. Instrument Air System Sheet 1

This page intentionally left blank.

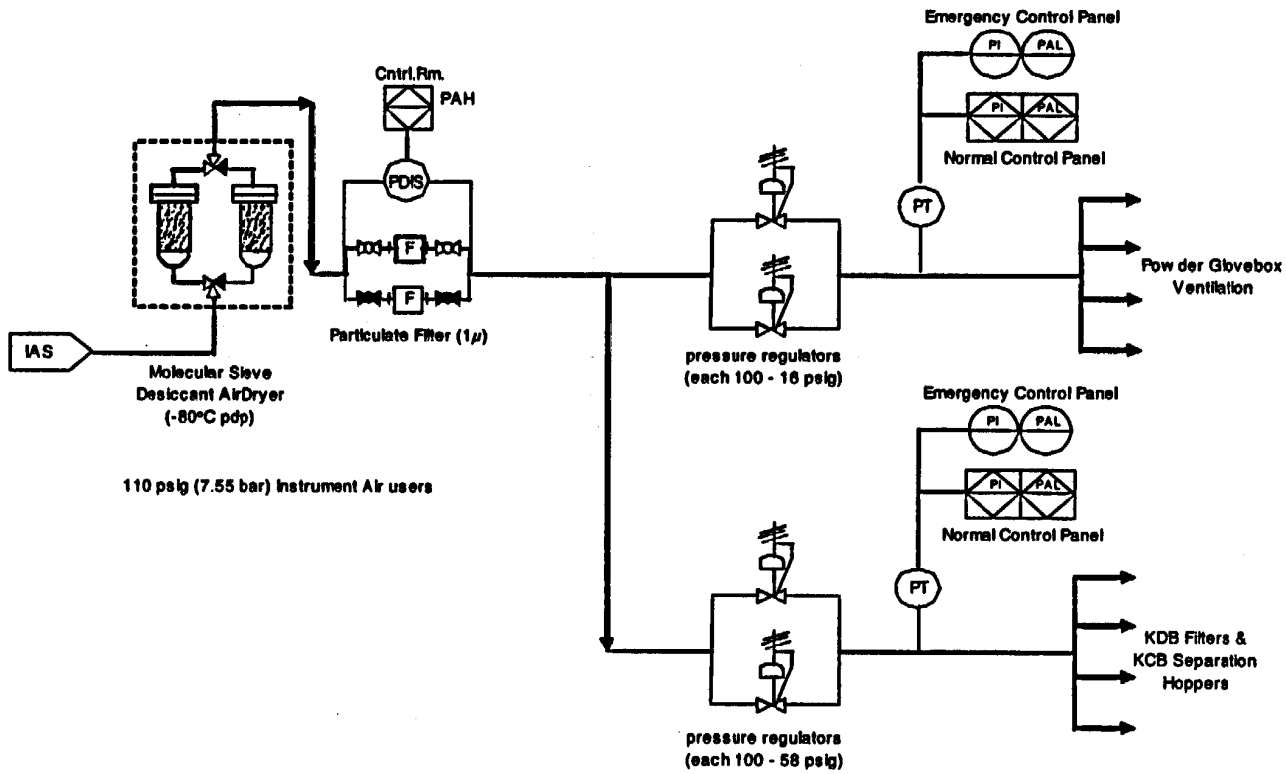

Figure 11.9-10. Instrument Air System Sheet 2

This page intentionally left blank.

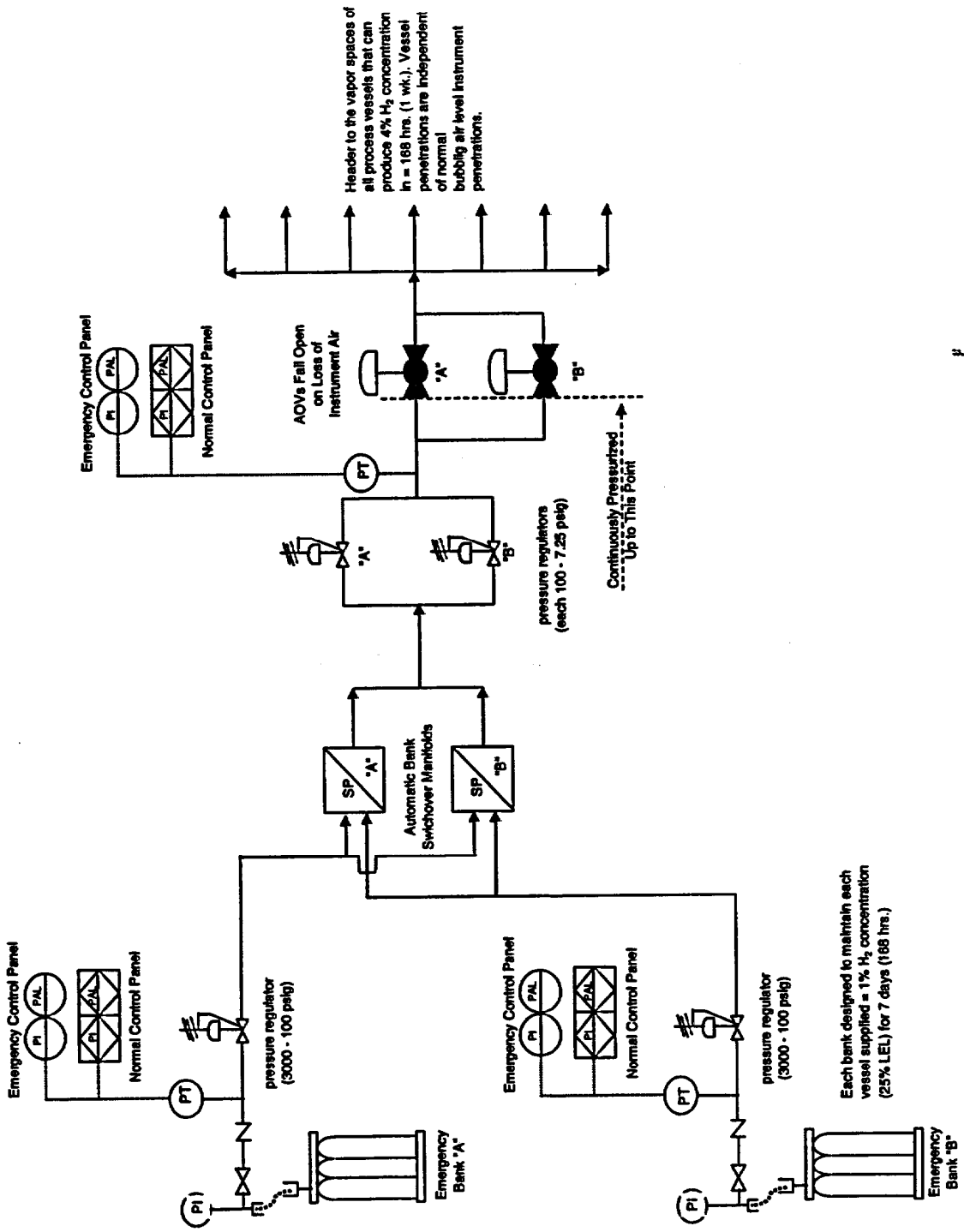

Figure 11.9-10. Instrument Air System Sheet 3

This page intentionally left blank.

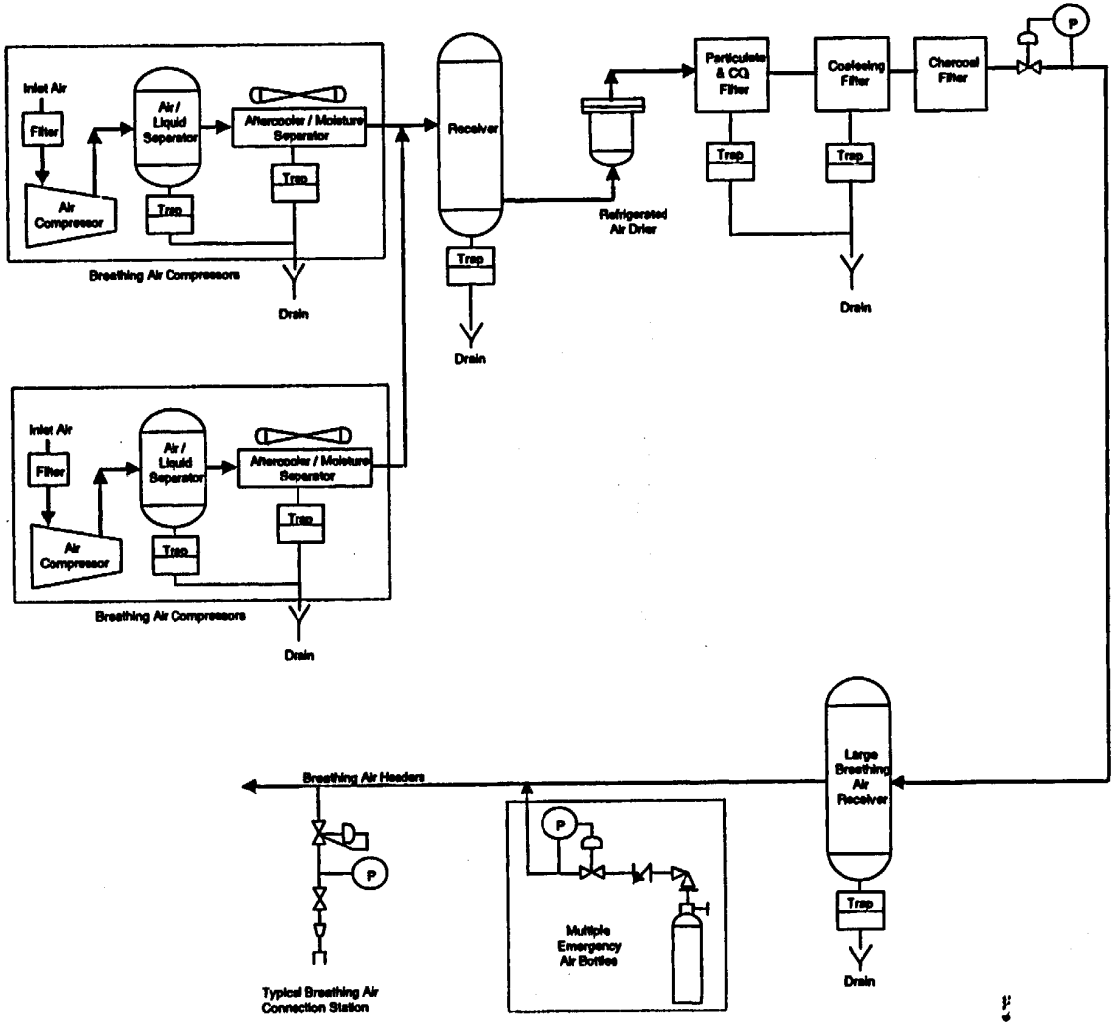

All components on this drawing are located in the BAP

Building and System Designations are found in Table 11.0-1

Figure 11.9-11. Breathing Air System

This page intentionally left blank.

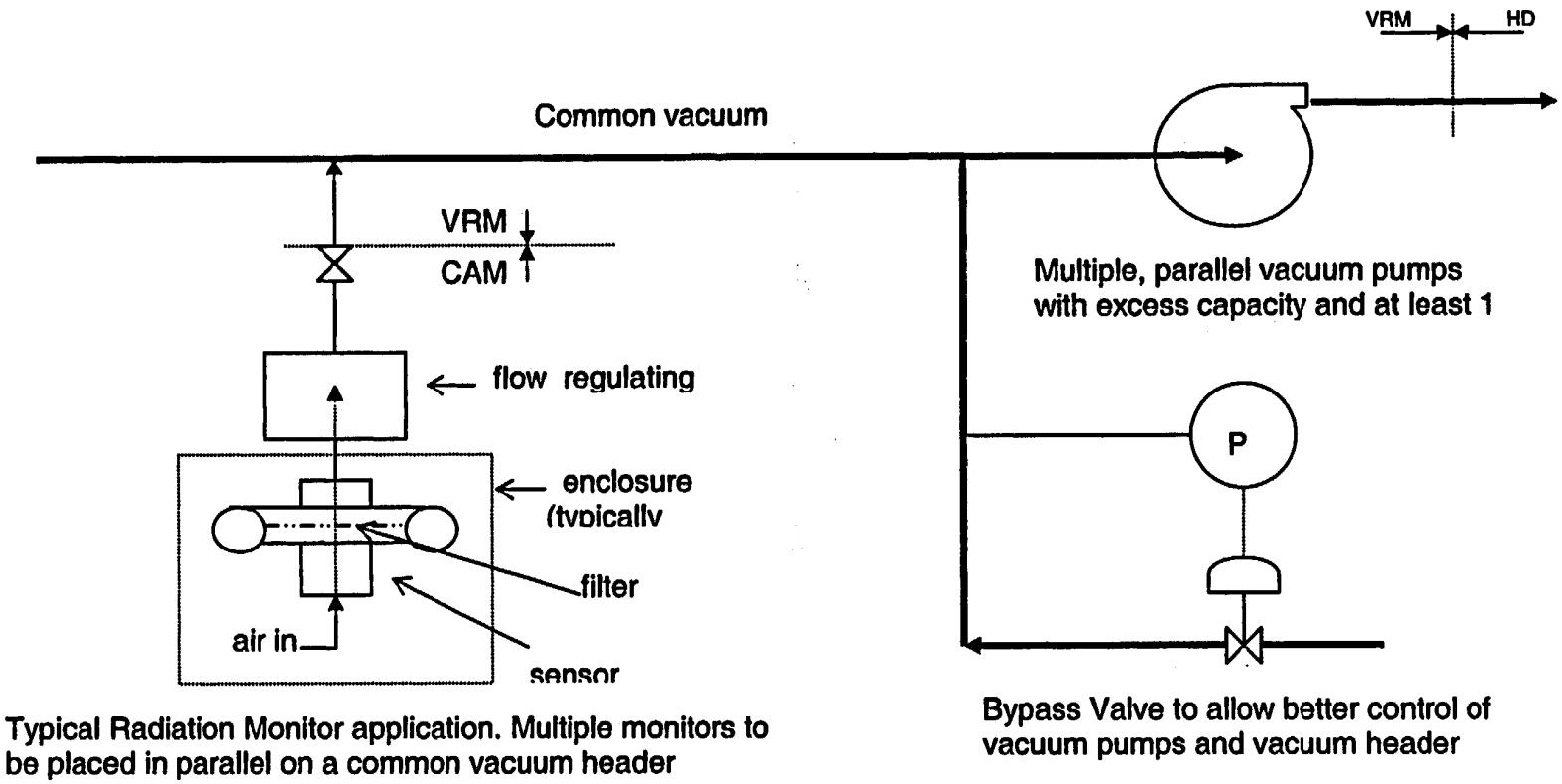

Building and System Designations are found in Table 11.0-1

Figure 11.9-12. Radiation Monitoring Vacuum System

This page intentionally left blank.

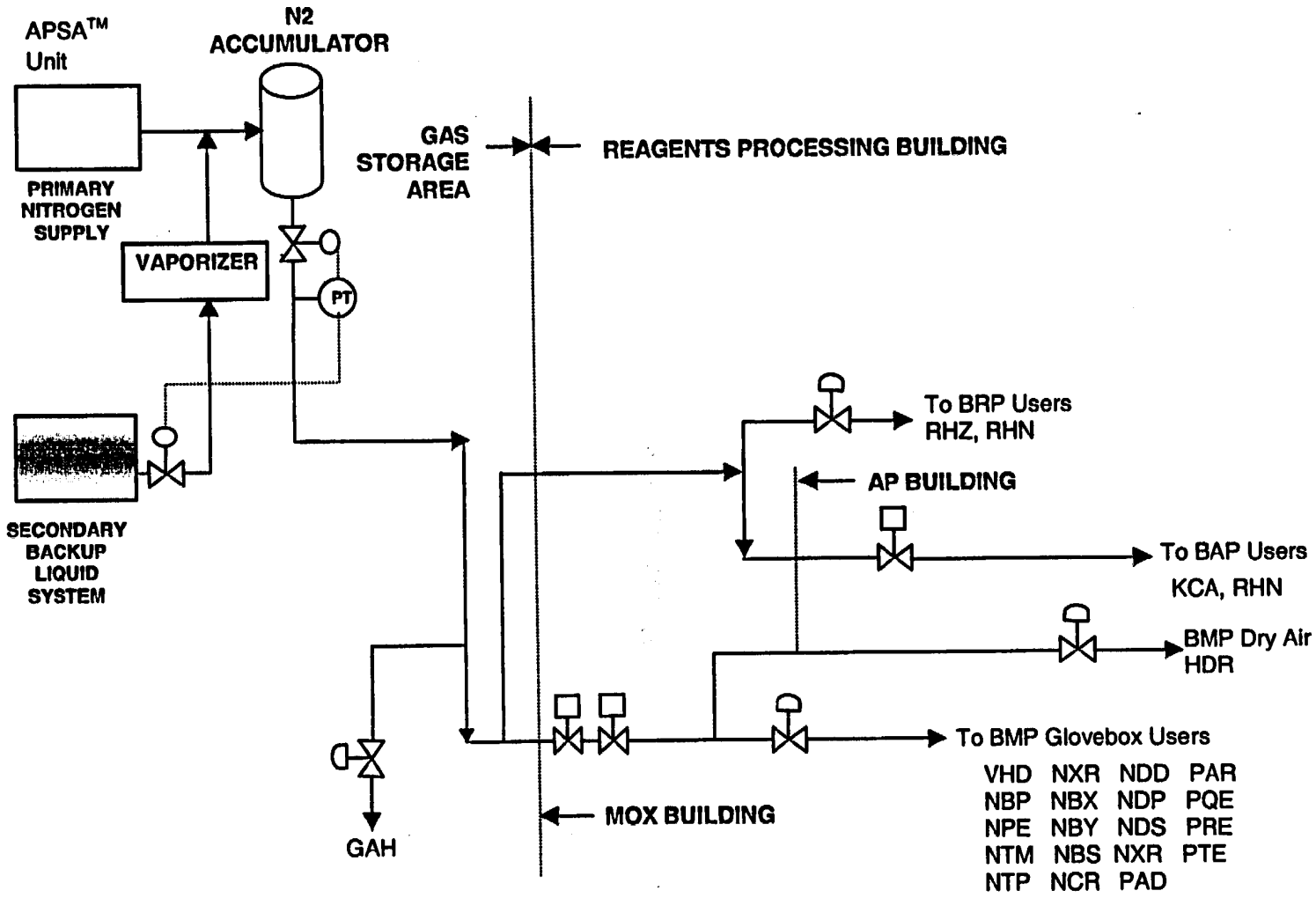

Figure 11.9-13. Nitrogen System

Building and System Designations are found in Table 11.0-1

This page intentionally left blank.

[THIS PAGE INTENTIONALLY LEFT BLANK.]

This page intentionally left blank.

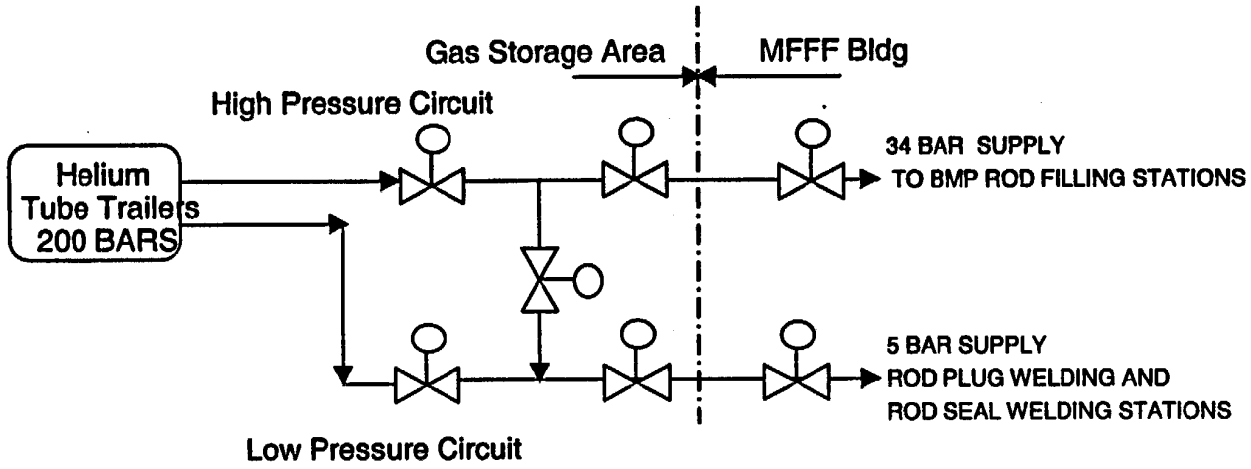

Building and System Designations are found in Table 11.0-1

Figure 11.9-15. Helium System

This page intentionally left blank.

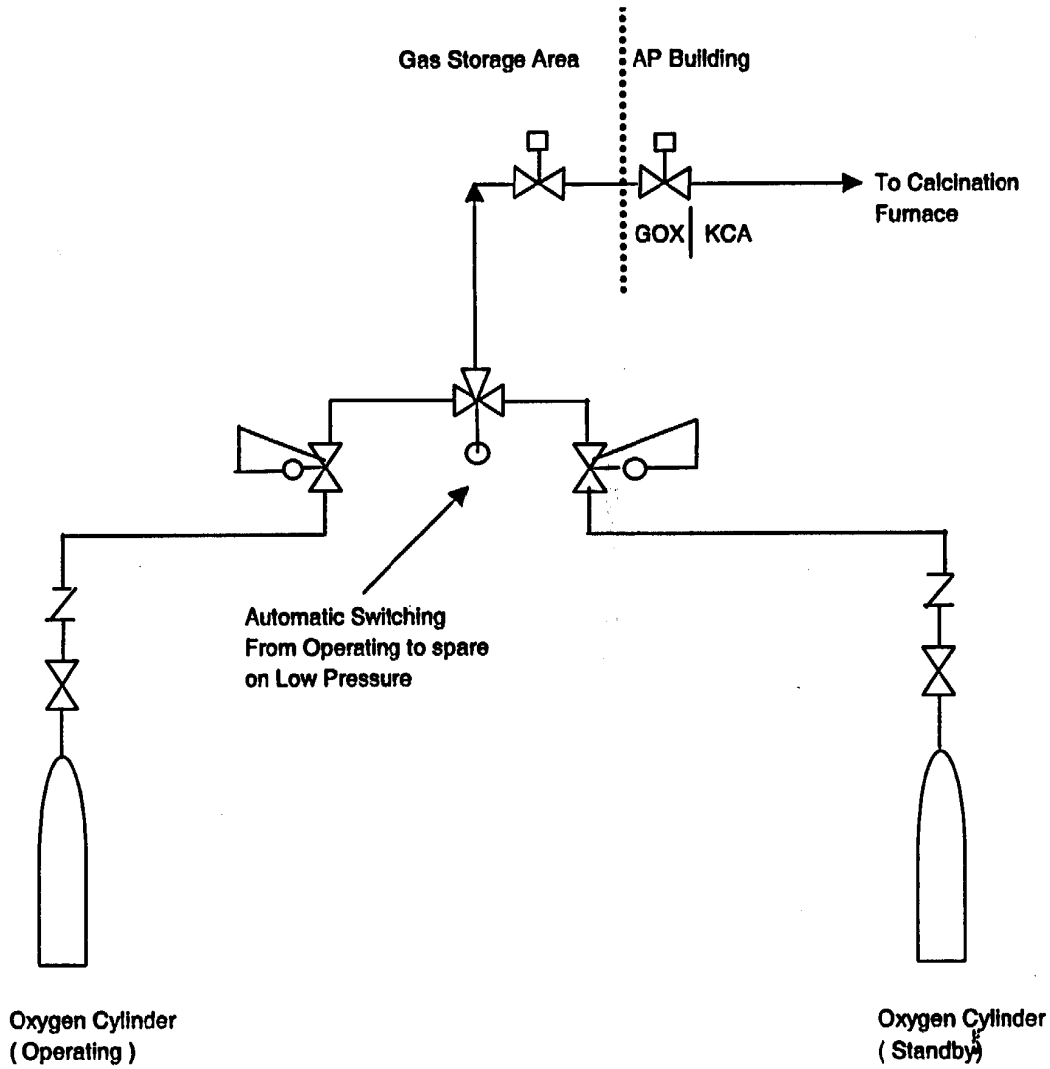

Building and System Designations are found in Table 11.0-1

Figure 11.9-16. Oxygen System

This page intentionally left blank.

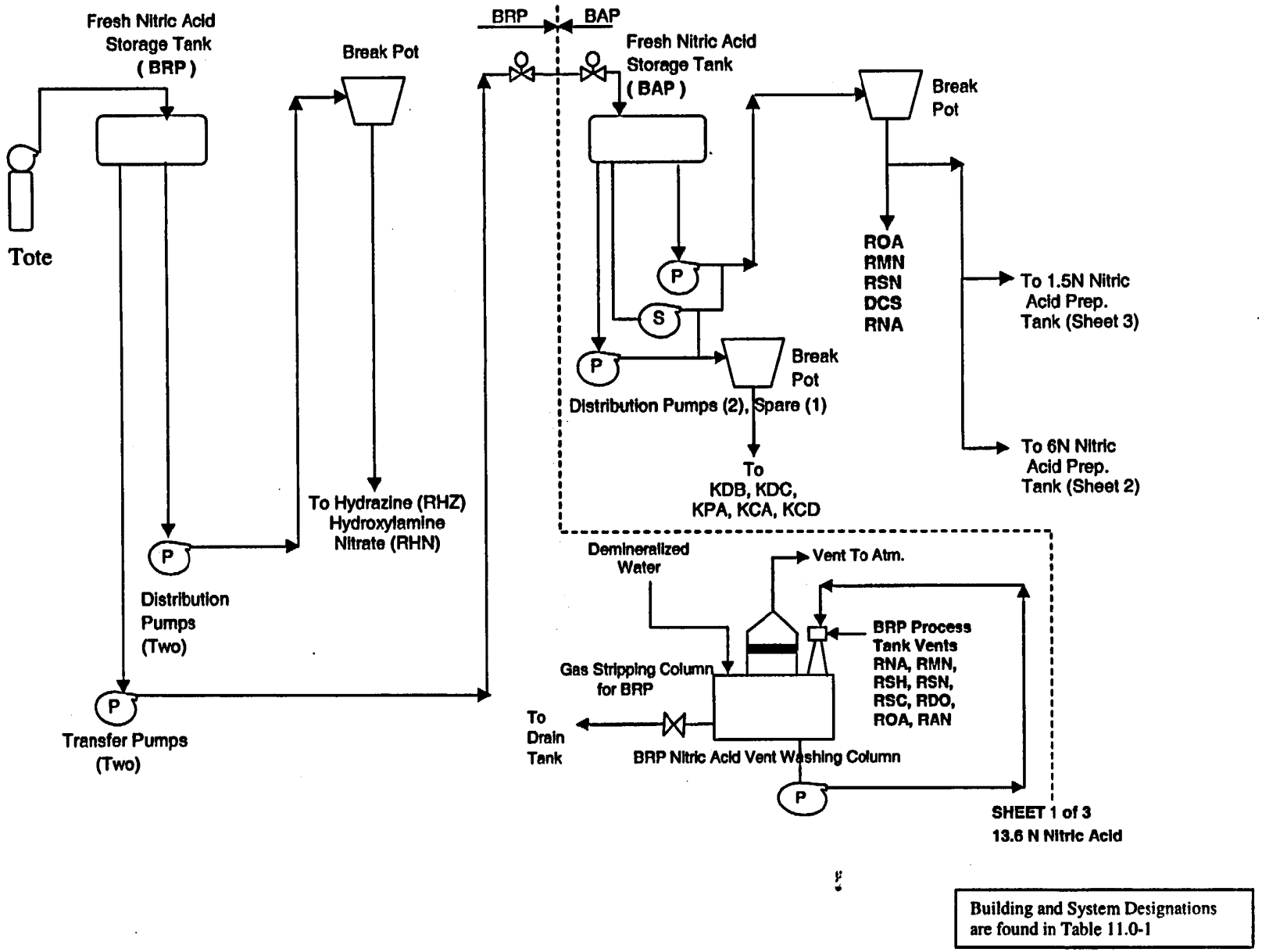

Figure 11.9-17. Nitric Acid System

This page intentionally left blank.

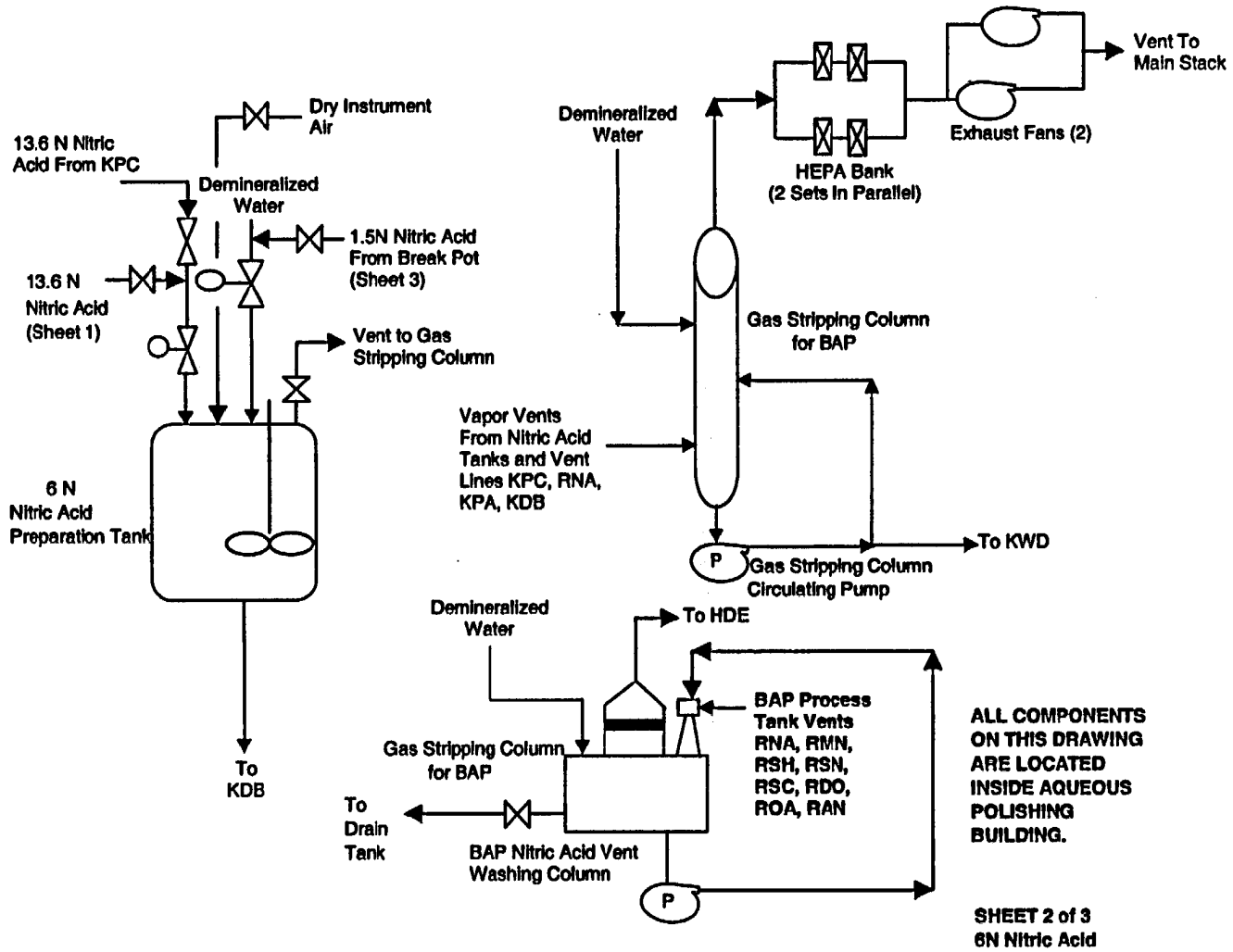

Building and System Designations are found in Table 11.0-1

Figure 11.9-17. Nitric Acid System (continued)

This page intentionally left blank.

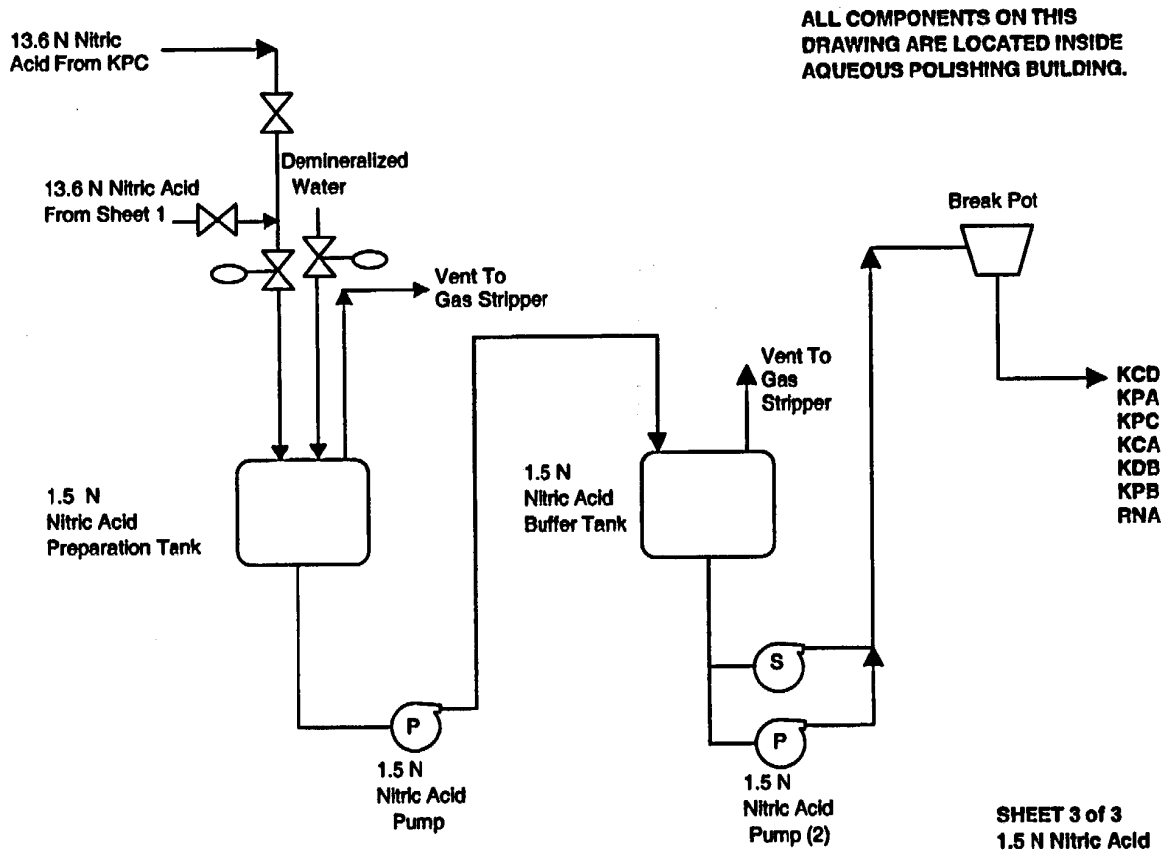

Building and System Designations are found in Table 11.0-1

Figure 11.9-17. Nitric Acid System (continued)

This page intentionally left blank.

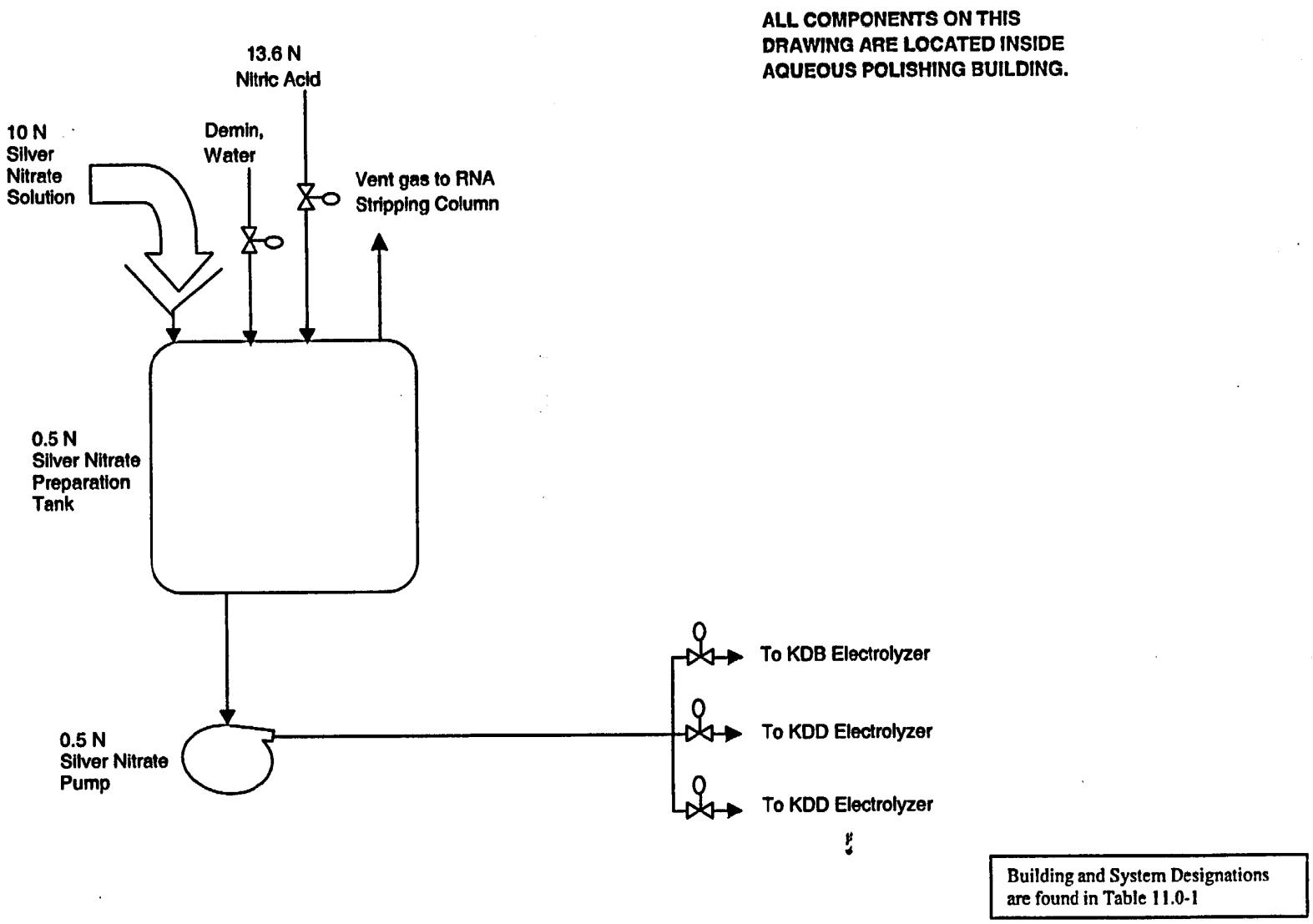

Figure 11.9-18. Silver Nitrate System

This page intentionally left blank.

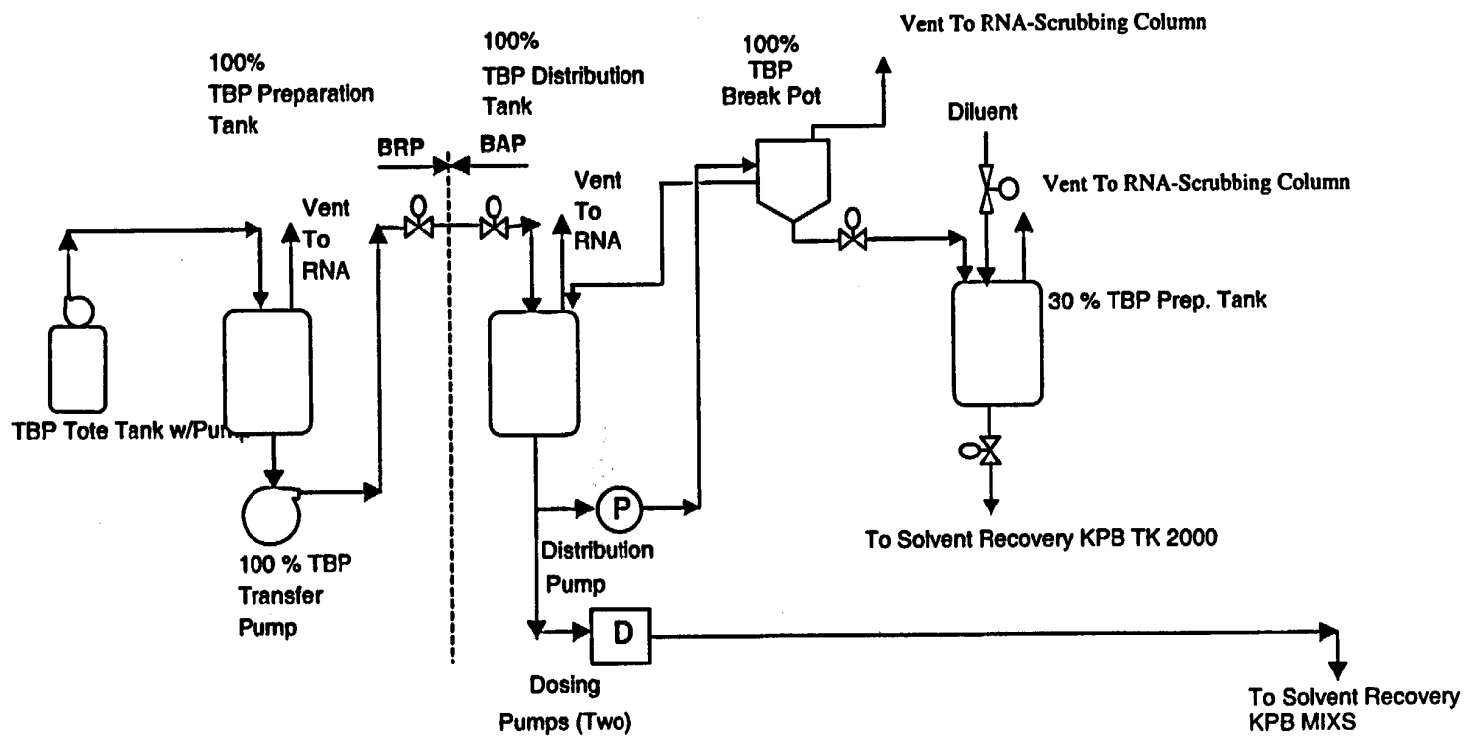

Building and System Designations are found in Table 11.0-1

Figure 11.9-19. Tributyl Phosphate System

This page intentionally left blank.

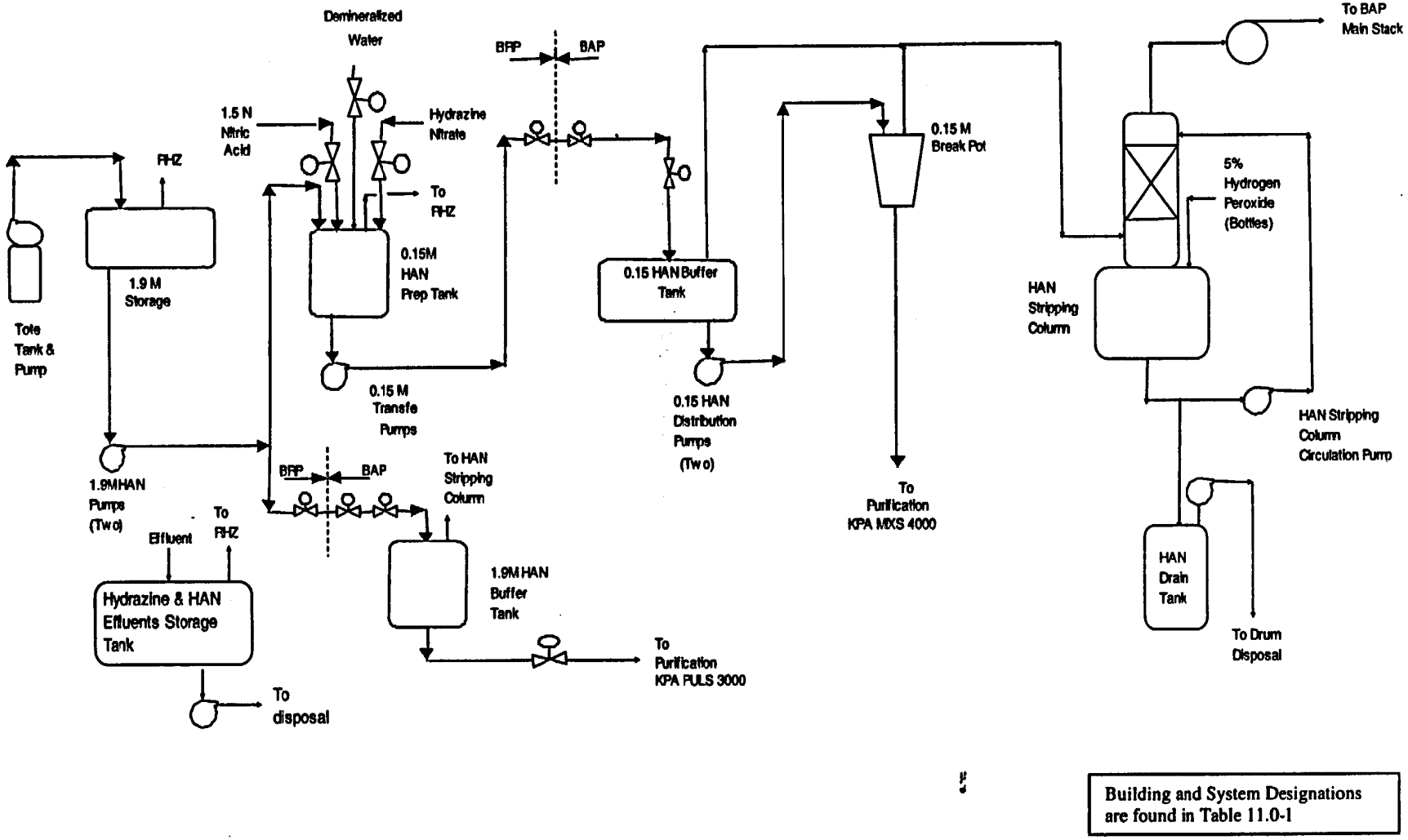

Figure 11.9-20. Hydroxylamine Nitrate System

This page intentionally left blank.

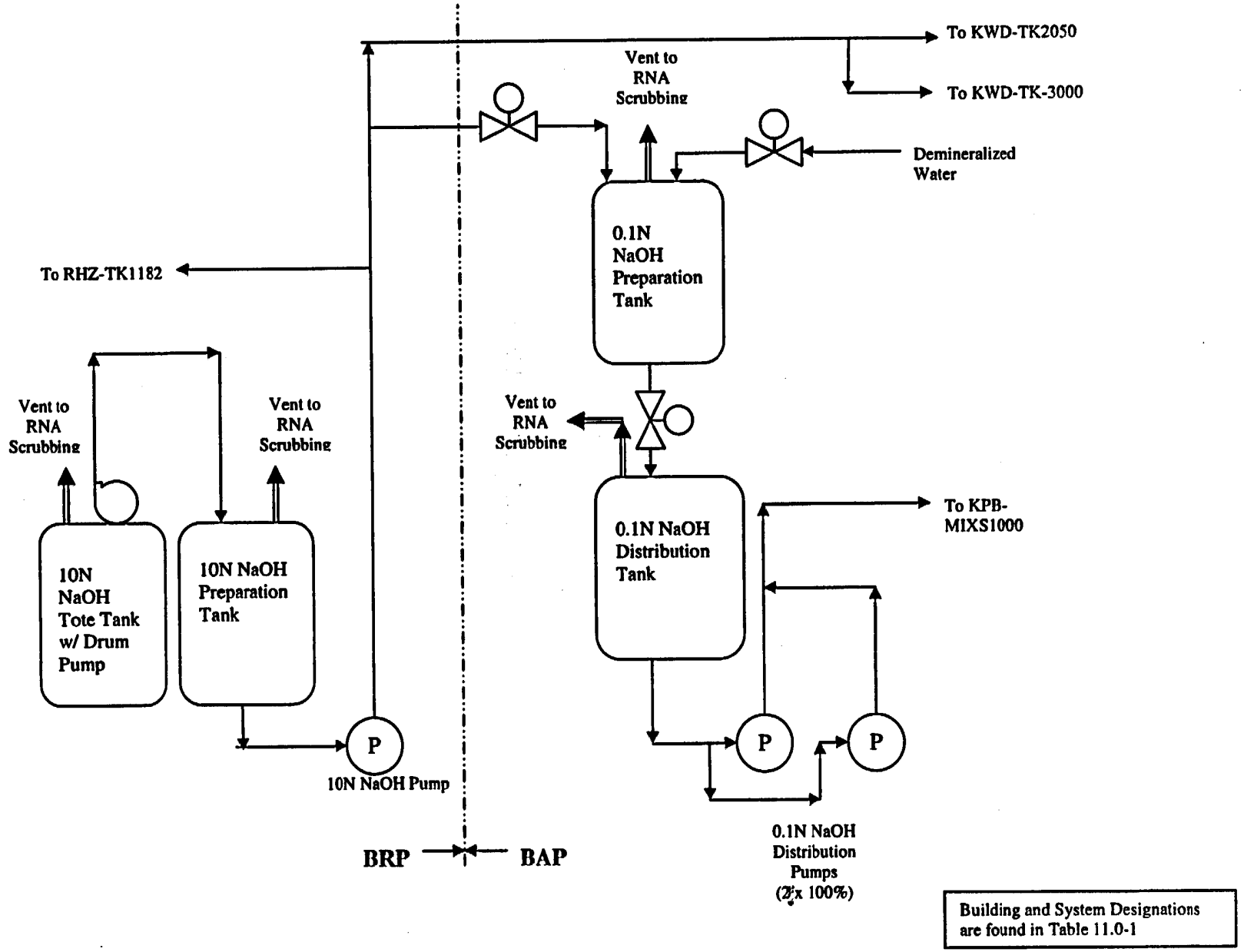

Figure 11.9-21. Sodium Hydroxide System

This page intentionally left blank.

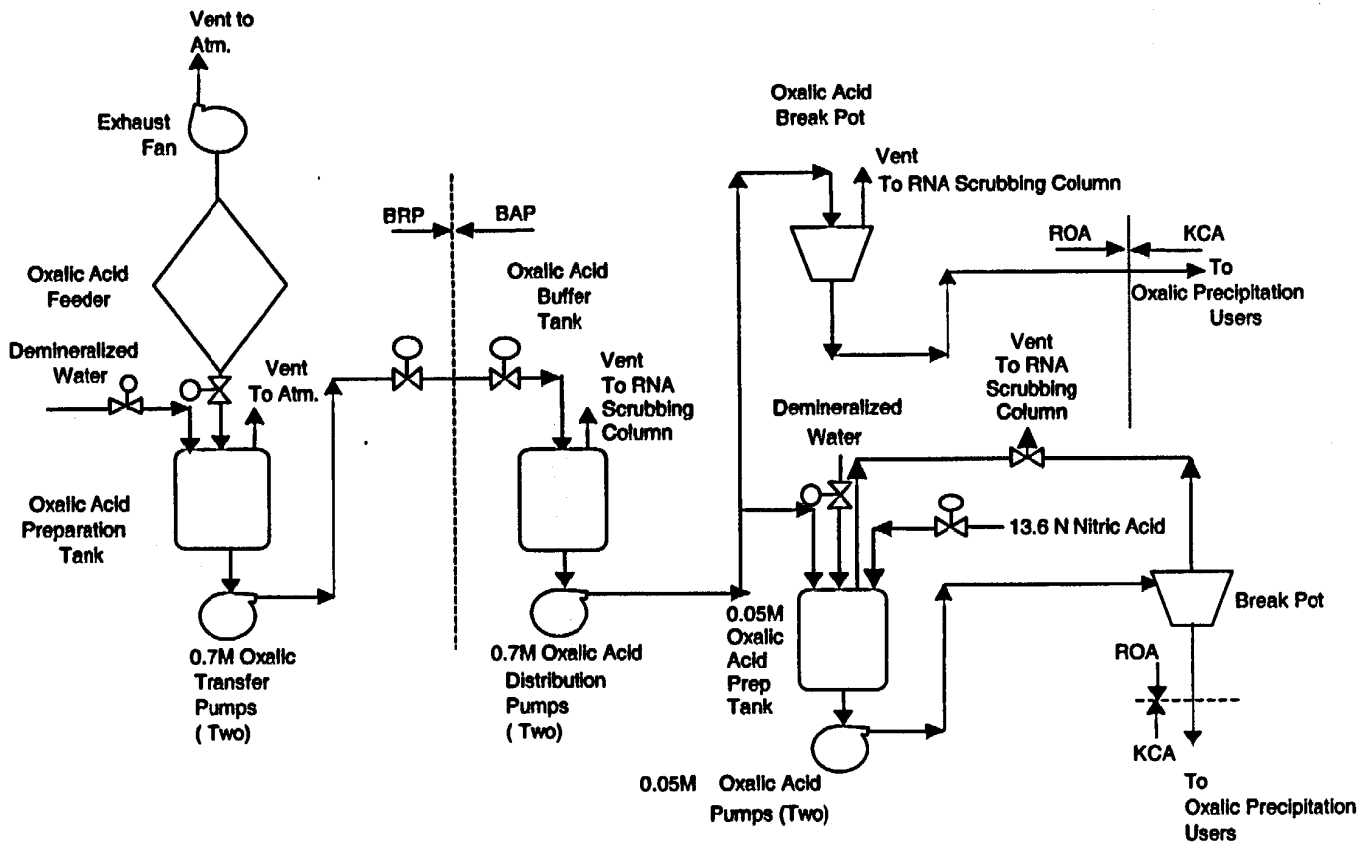

Building and System Designations are found in Table 11.0-1

Figure 11.9-22. Oxalic Acid System

This page intentionally left blank.

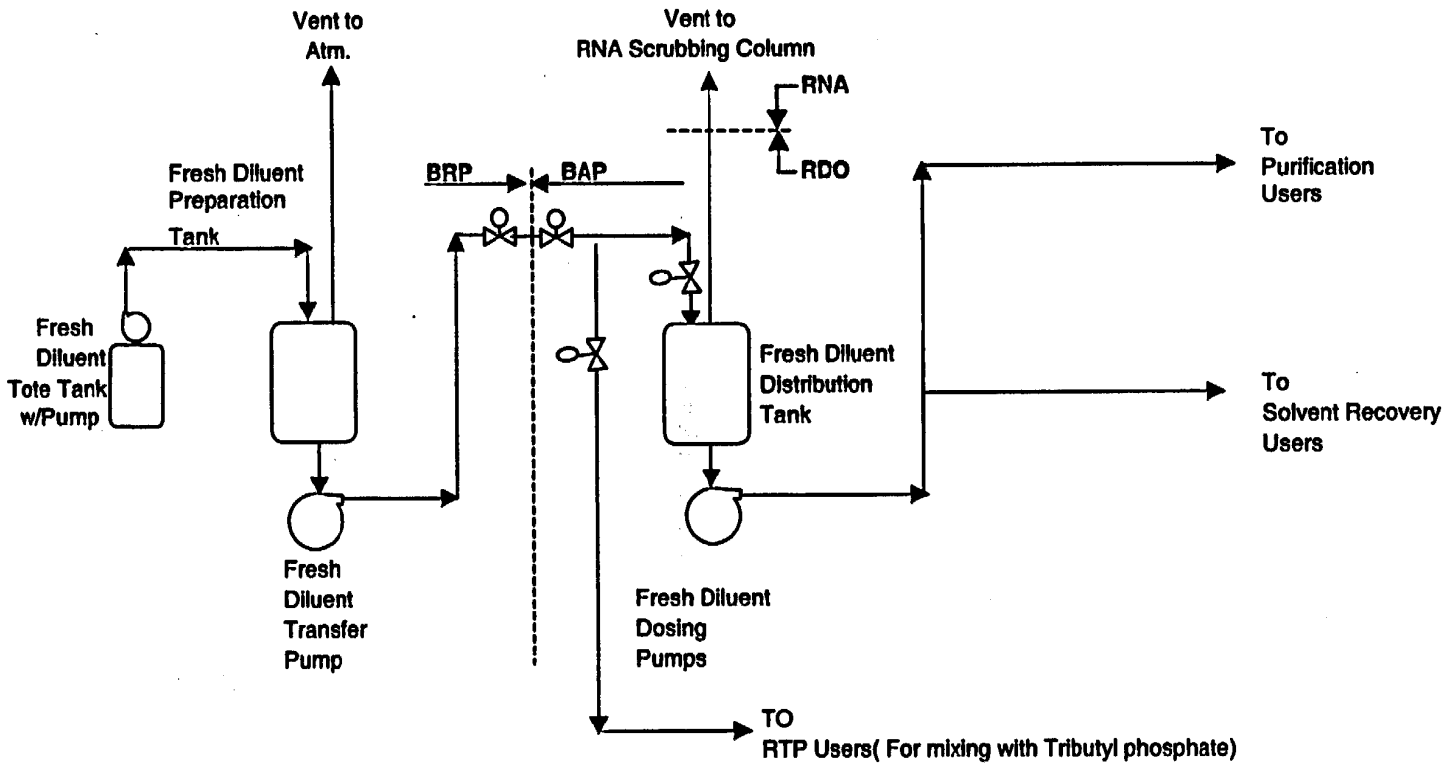

Building and System Designations are found in Table 11.0-1

Figure 11.9-23. Diluent System

This page intentionally left blank.

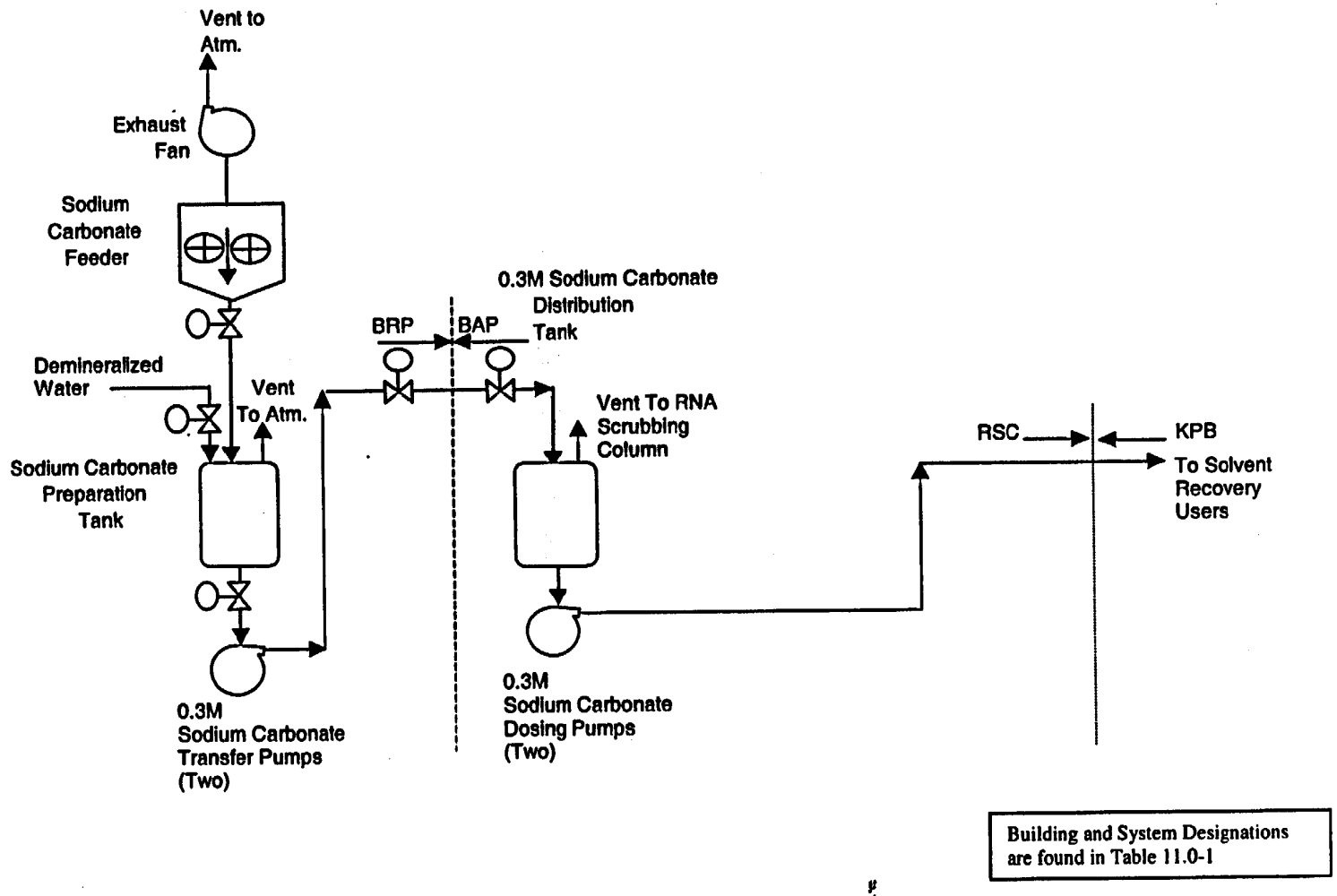

Figure 11.9-24. Sodium Carbonate System

This page intentionally left blank.

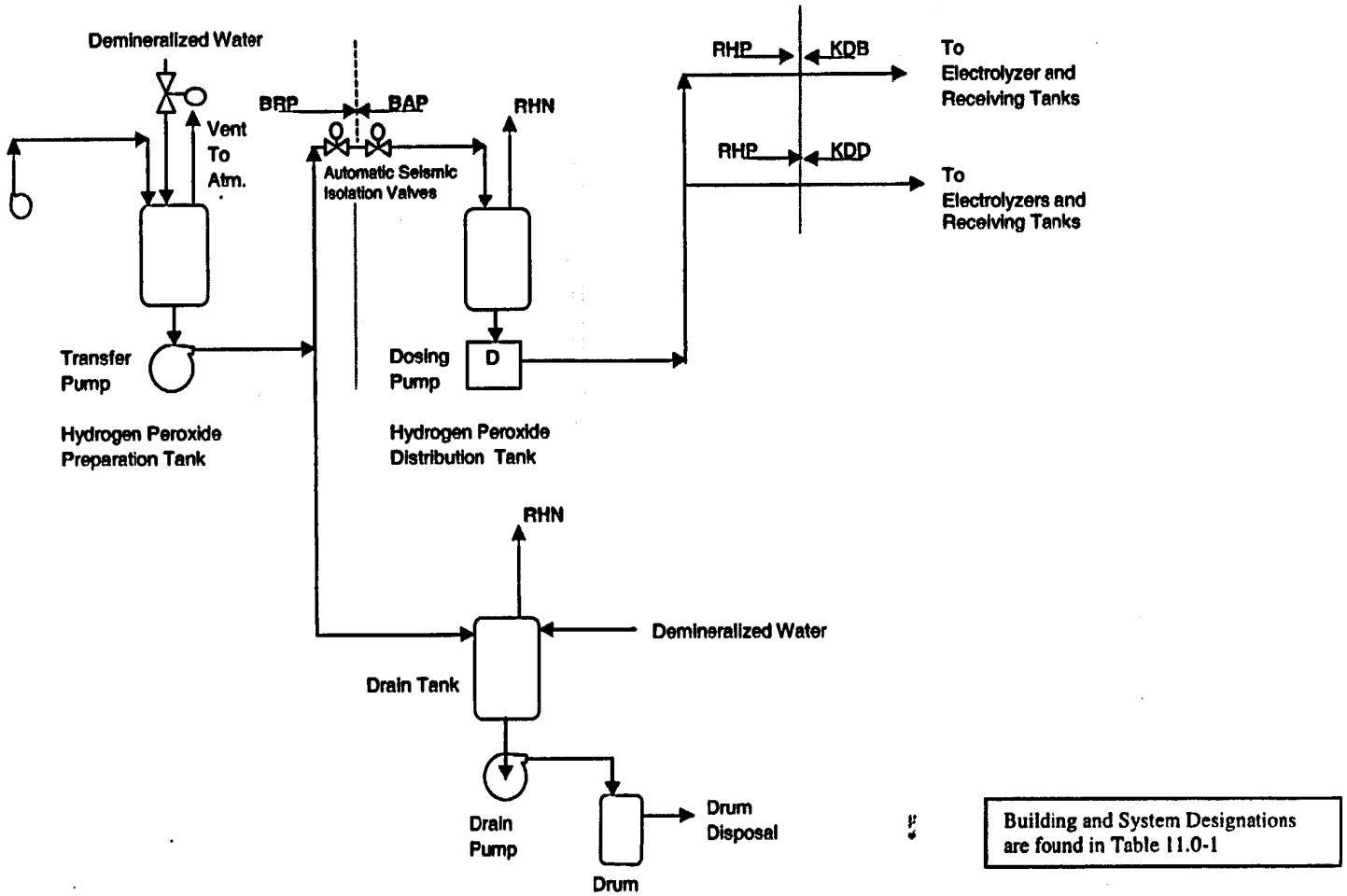

Figure 11.9-25. Hydrogen Peroxide System

This page intentionally left blank.

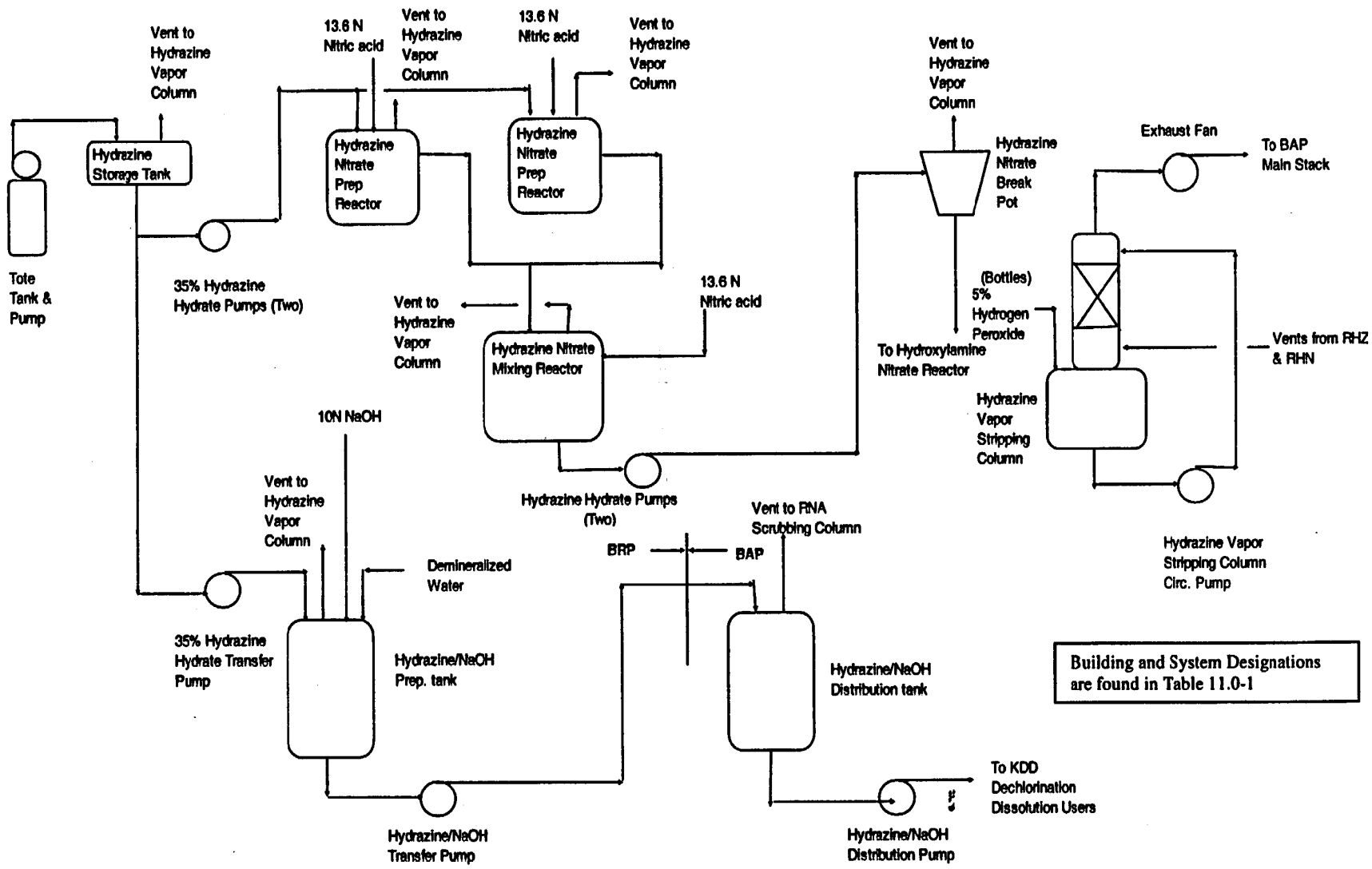

Figure 11.9-26. Hydrazine System

This page intentionally left blank.

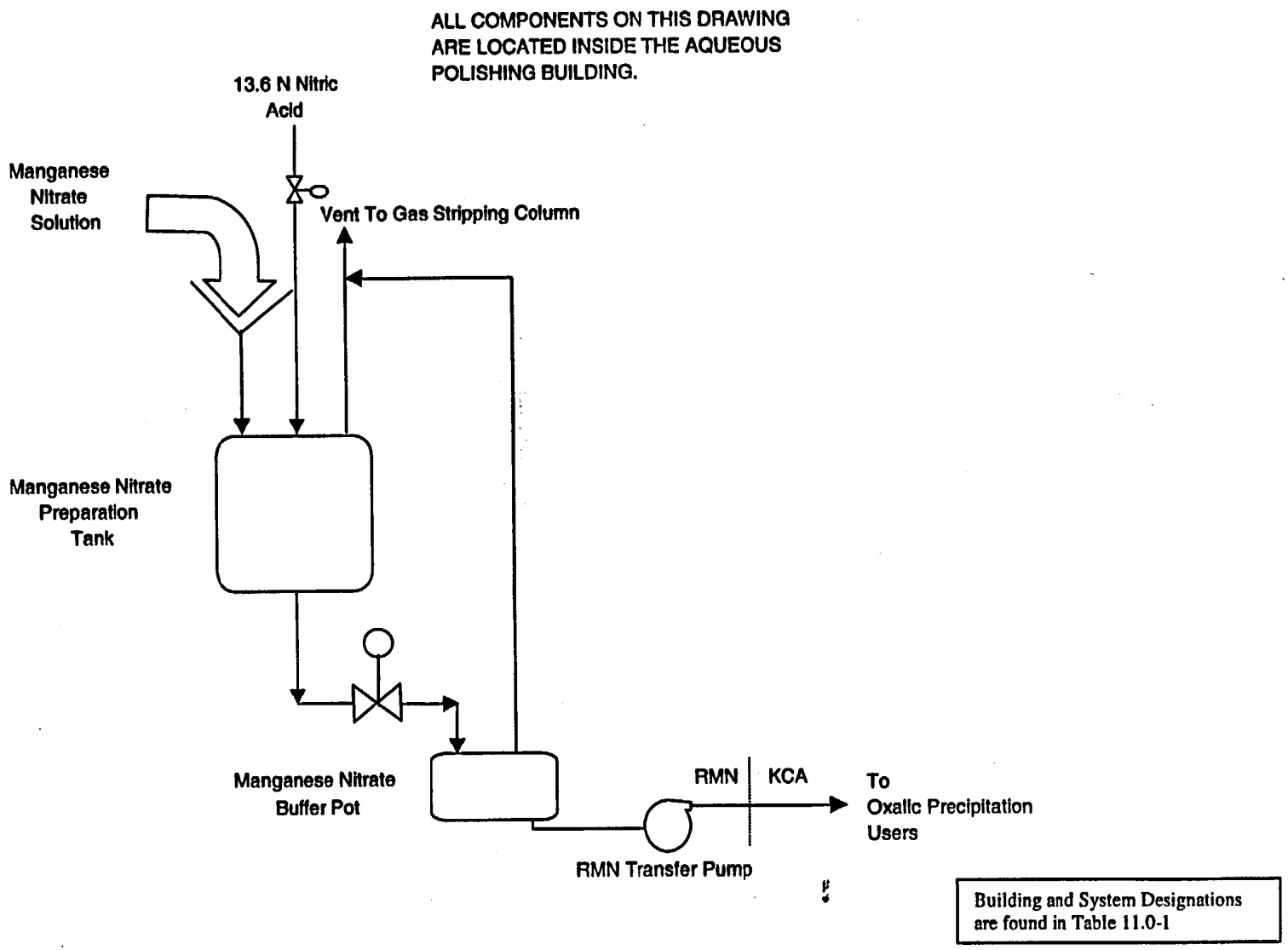

Figure 11.9-27. Manganese Nitrate System

This page intentionally left blank.

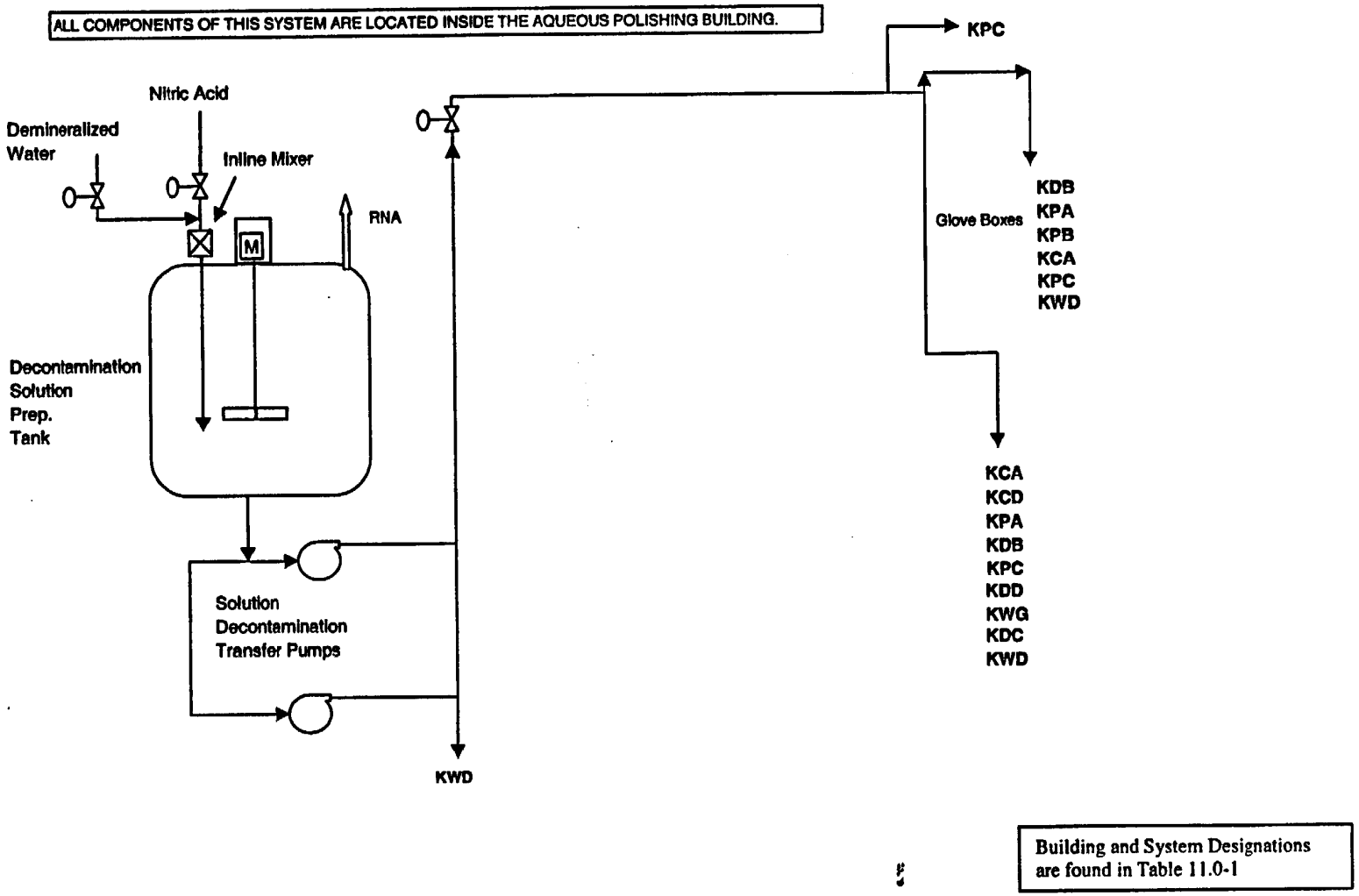

Figure 11.9-28. Decontamination System

This page intentionally left blank.

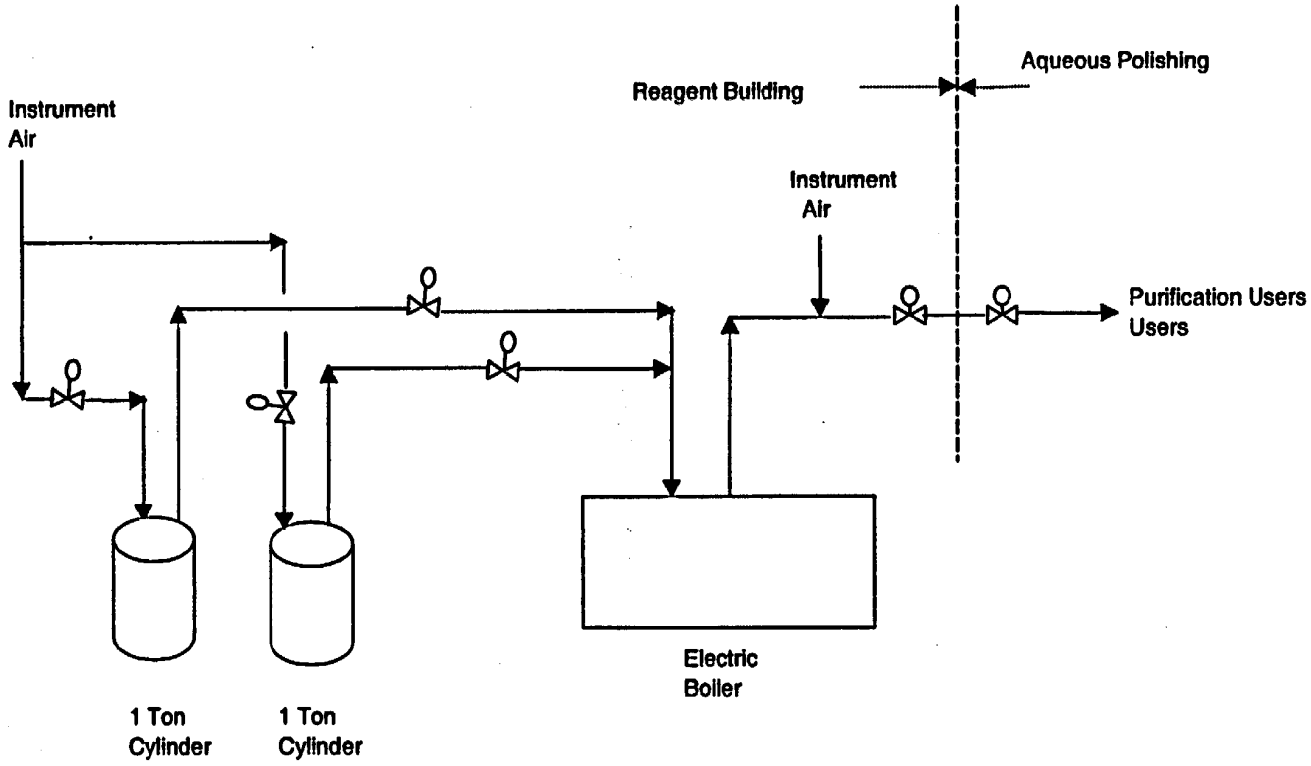

Building and System Designations are found in Table 11.0-1

Figure 11.9-29. Nitrogen Oxide System

This page intentionally left blank.

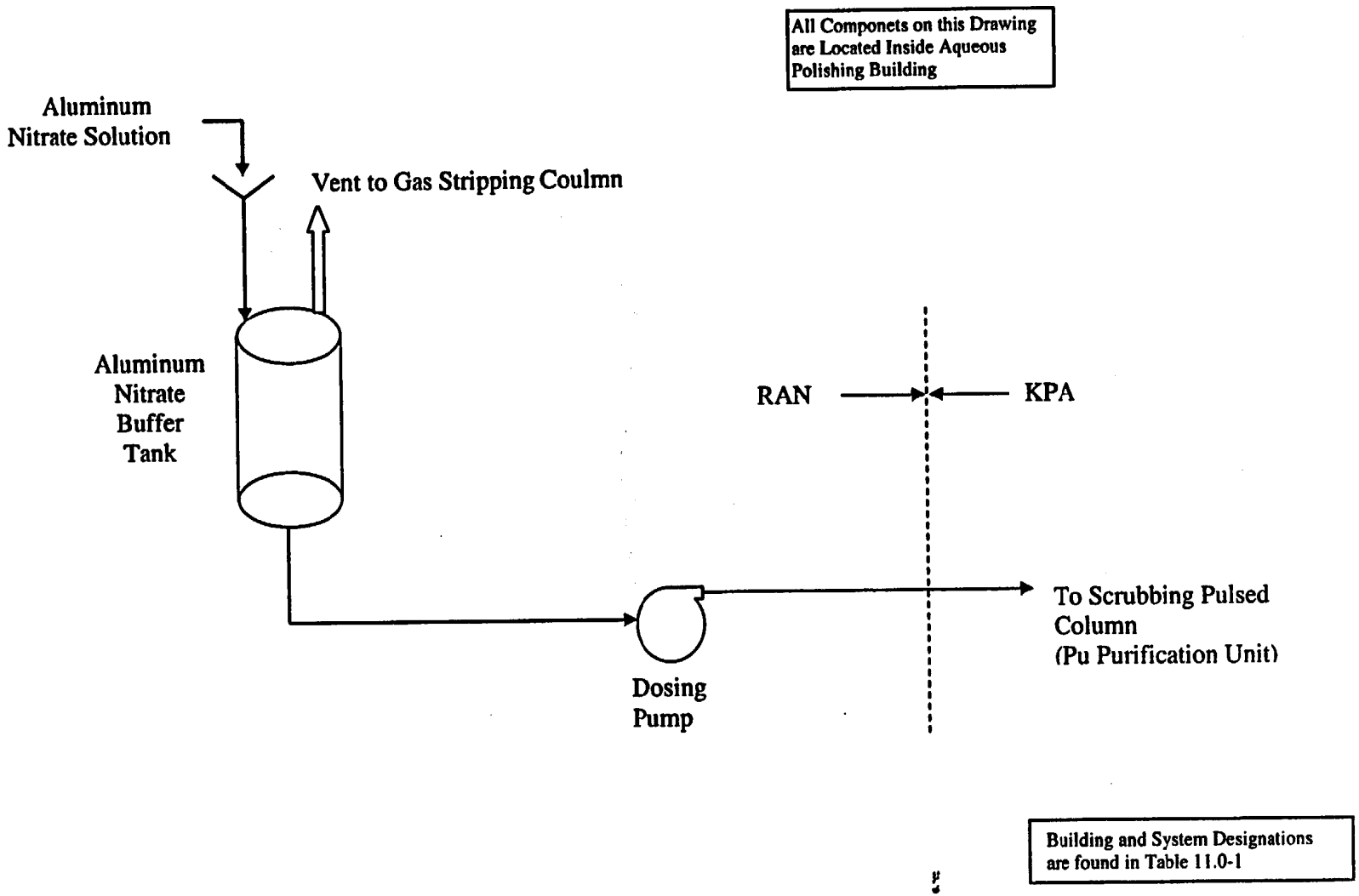

Figure 11.9-30. Aluminum Nitrate System

This page intentionally left blank.

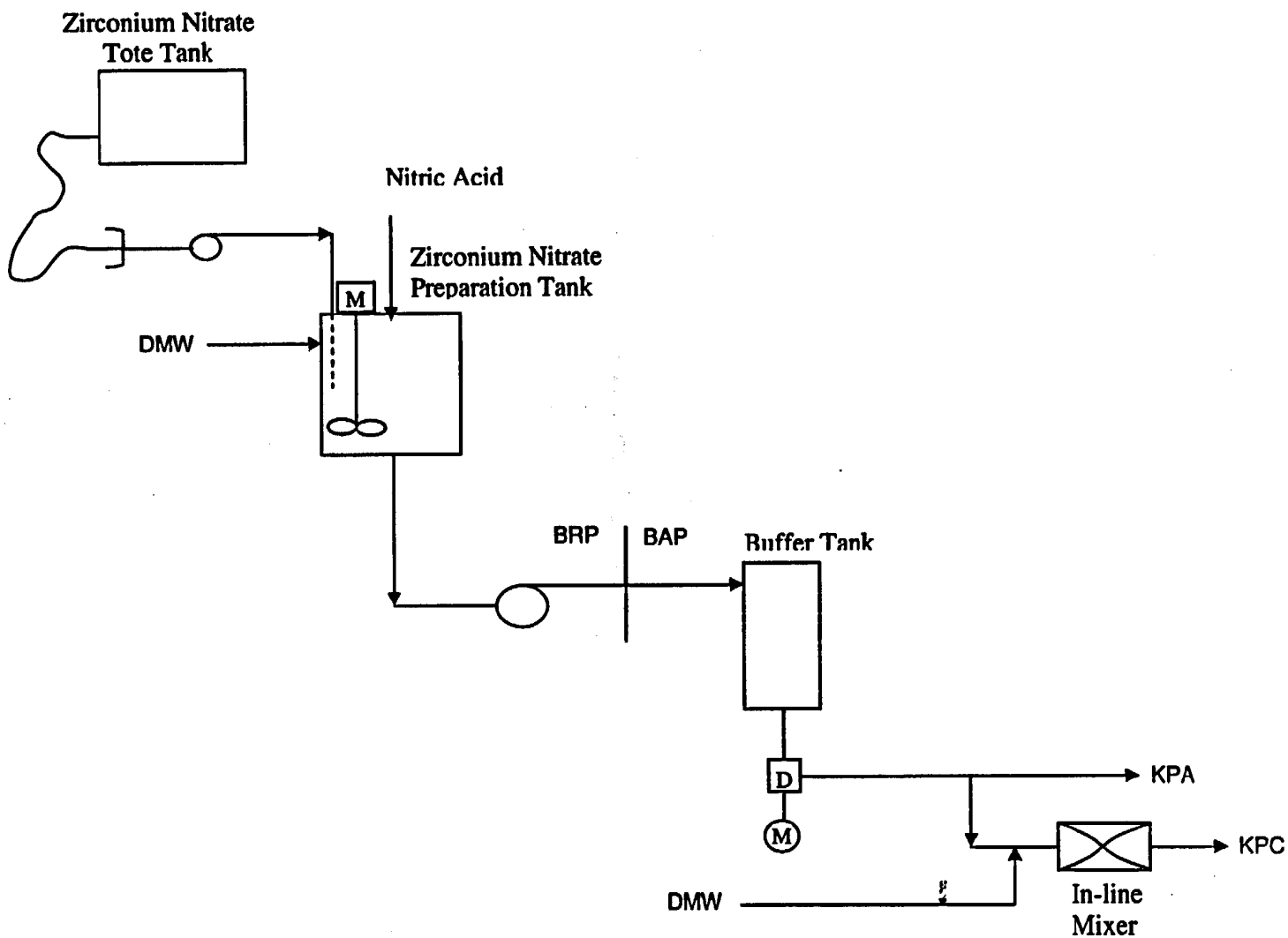

Figure 11.9-31. Zirconium Nitrate System

Building and System Designations are found in Table 11.0-1

This page intentionally left blank.

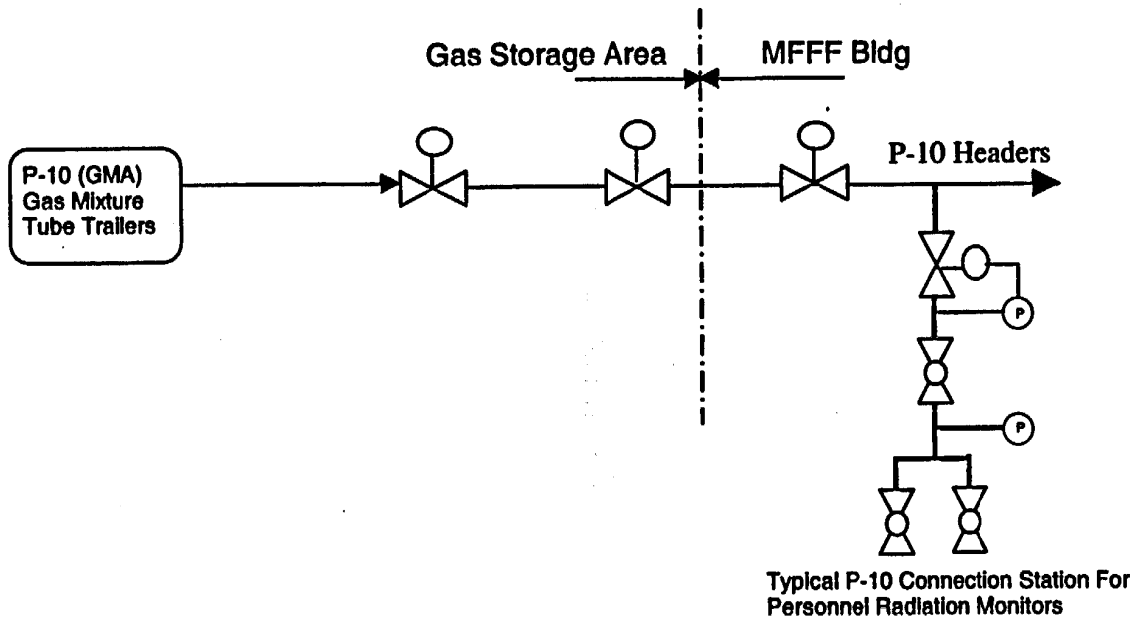

Building and System Designations are found in Table 11.0-1

Figure 11.9-32. Methane-Argon (P-10) System

This page intentionally left blank.

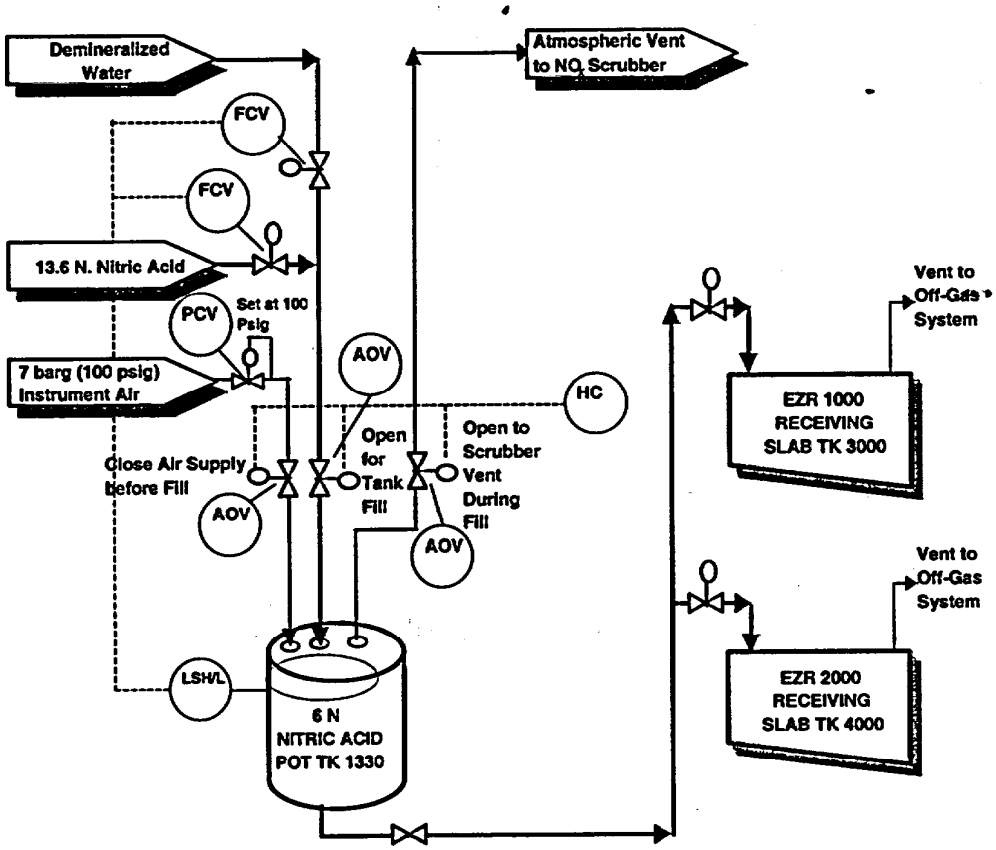

Figure 11.9-33. 6N Nitric Acid Preparation and Distribution in Aqueous Polishing Building

This page intentionally left blank.