Official Transcript of Proceedings

NUCLEAR REGULATORY COMMISSION

Title: Advisory Committee on Reactor Safeguards

Docket Number: (n/a)

Location: teleconference

Date: Thursday, March 3, 2022

Work Order No.: NRC-1869 Pages 1-115

NEAL R. GROSS AND CO., INC.
Court Reporters and Transcribers
1716 14th Street, N.W.
Washington, D.C. 20009
(202) 234-4433

1
2
3
4 DISCLAIMER
5
6
7 UNITED STATES NUCLEAR REGULATORY COMMISSION'S
8 ADVISORY COMMITTEE ON REACTOR SAFEGUARDS
9
10
11 The contents of this transcript of the
12 proceeding of the United States Nuclear Regulatory
13 Commission Advisory Committee on Reactor Safeguards,
14 as reported herein, is a record of the discussions
15 recorded at the meeting.
16
17 This transcript has not been reviewed,
18 corrected, and edited, and it may contain
19 inaccuracies.
20
21
22
23

UNITED STATES OF AMERICA

NUCLEAR REGULATORY COMMISSION

+ + + + +

693RD MEETING

ADVISORY COMMITTEE ON REACTOR SAFEGUARDS

(ACRS)

+ + + + +

THURSDAY

MARCH 3, 2022

+ + + + +

The Advisory Committee met via teleconference at 8:30 a.m., Joy L. Rempe, Chairman, presiding.

COMMITTEE MEMBERS:

JOY L. REMPE, Chairman

WALTER L. KIRCHNER, Vice Chairman

DAVID A. PETTI, Member-at-Large

RONALD G. BALLINGER, Member

VICKI M. BIER, Member

CHARLES H. BROWN, JR., Member

VESNA B. DIMITRIJEVIC, Member

GREGORY H. HALNON, Member

JOSE A. MARCH-LEUBA, Member

MATTHEW W. SUNSERI, Member

ACRS CONSULTANTS:

DENNIS BLEY

STEPHEN SCHULTZ

DESIGNATED FEDERAL OFFICIAL:

KENT HOWARD

CONTENTS

Page

NIST Event Briefing (Open)

7.1) Remarks from Subcommittee Chairman 4

7.2) Presentations from the NIST and NRC staff

Joshua Borromeo 8

Thomas Newton, NIST 11

Patrick Boyle, NRC 73

P-R-O-C-E-E-D-I-N-G-S

8:30 a.m.

CHAIRMAN REMPE: So good morning, this meeting will now come to order. This is the second day of the 693rd meeting of the Advisory Committee on reactor Safeguards.

Because of the COVID-19 outbreak and current health precautions, this Committee meeting is being conducted remotely.

I'm Joy Rempe, the Chairman of the ACRS. I'm now going to call roll to verify a quorum. And that clear communications exist.

Members in attendance are Ron Ballinger?

MEMBER BALLINGER: Yes.

CHAIRMAN REMPE: Vicki Bier?

MEMBER BIER: Yes.

CHAIRMAN REMPE: Charles Brown?

MEMBER BROWN: Yes.

CHAIRMAN REMPE: Vesna Dimitrijevic?

MEMBER DIMITRIJEVIC: Yes.

CHAIRMAN REMPE: Great.

MEMBER DIMITRIJEVIC: Sorry. I forget how to use my microphone.

CHAIRMAN REMPE: Charlie, I think we need you to mute yourself now because I'm hearing a little

bit of an echo. Greg Halnon?

MEMBER HALNON: Yes, I'm here.

CHAIRMAN REMPE: Walt Kirchner?

VICE CHAIRMAN KIRCHNER: Here.

CHAIRMAN REMPE: Jose March-Leuba? We'll come back to Jose. Dave Petti? Dave, I can't hear you although you --

MEMBER PETTI: Oh. Here.

CHAIRMAN REMPE: Oh now I hear you. Okay. Thank you. Okay, Jose, are you there because, since we had a little bit of trouble with Dave?

MEMBER MARCH-LEUBA: Yes. I had to change speakers. My headphones are still working.

CHAIRMAN REMPE: Okay. Okay, thanks. And then Matthew Sunseri, are you here?

MEMBER SUNSERI: Here.

CHAIRMAN REMPE: Great. So we have a quorum. The ACRS was established by the Atomic Energy Act and is govern by the Federal Advisory Committee Act.

The federal notice announcing this meeting was published on February 14th, 2022. This announcement, as well as an agenda and instructions for interested parties to submit written documents or to request opportunities -- this announcement included

an agenda and instructions for interested parties to submit written documents or request opportunities to address the Committee.

The designated federal officer for this meeting is Kent Howard.

A communications channel has been open to allow members of the public to monitor the open portions of this meeting.

The ACRS has just started inviting members of the public to use the MS Teams link to view slides and other discussion materials during these open sessions.

If you're a member of the public who does not yet have this link, please email Lawrence Burkhart at lawrence.burkhart@nrc.gov. And I'll say it again just so you can write it down. lawrence.burkhart@nrc.gov.

In the future, the MS Teams link information will be placed in the federal notice, register notice. And agendas on the ACRS public website.

We've received no written comments or requests to make oral statements from members of the public regarding today's session. Periodically the meeting will be opened to accept comments from

participants listening to our meetings.

Written comments may be forward to Mr. Kent Howard, the designated federal officer.

During today's meeting the Committee will an information briefing on the National Institute of Standards and Technology, or NIST, reactor event.

A transcript of the open portions of the meeting is being kept. And it's requested that the speakers identify themselves and speak with sufficient clarity and volumes so that they can be readily heard. Additionally, participants should mute themselves when not speaking.

At this time I'd like to ask other members if they have any opening remarks. Hearing none, I'd then like to ask Member Sunseri to lead us through the information briefing for today. Matt.

MEMBER SUNSERI: Thank you, Chair Rempe. Good morning, Members. Members, this is the much awaited briefing by NIST and NRC Staff on the event that occurred at the NIST Reactor a little over one year ago.

Our plant operations subcommittee has been following the review and have provided the committee earlier reports from Staff to help you keep updated. We have been waiting for NIST and Staff to complete

their reviews so that we can get a complete understanding of what happened and what NIST is doing about it.

We reached that point in time. And I look forward to today's briefings and interactions. And I'd also like to thank the folks at NIST and Staff for meeting with us today.

Josh Borromeo, branch chief of the NPUF licensing branch will introduce NIST and the Staff. And before we get started I want to let everyone know that we do have a hard stop at 11:30 due to another activity that requires the attention of several members.

So, are there any questions from Members before we get started? All right. I will now turn to Joshua for the introductions and presentations. Joshua?

MR. BORROMEO: Thank you, Member Sunseri. Like said, I'm Josh Borromeo and I'm chief of the Non-power Production and Utilization Facility, or NPUF, licensing branch. My branch is responsible for the licensing of NPUFs, including the National Institute of Standards and Technology, NIST, center for neutron research.

We are happy to have the opportunity to

provide the ACRS with an overview of the fuel failure event that occurred on February 3rd, 2021 at the test reactor at NIST. Today you'll hear from both the licensee and the staff with a primary focus on the event sequence and the technical analysis of the event.

Now, there are two areas that I want to highlight before I turn over to NIST. First, while this was a fuel failure event and there was a release of radioactive material to the environment, the reactor safety systems functioned properly and the offsite dose to the public was near background levels and well below the NRC's regulatory limits.

The NRC remains satisfied that public health and safety was protected. And that the surrounding community remains safe. The reactor remains safely shut down and is being continuously monitored for fission product release.

The second is that this event exceeded a safety limit. And exceeding a safety limit requires the reactor to be shut down and cannot be restarted without NRC authorization. The NRC is actively reviewing the NIST request to restart the reactor and perform an inspection and enforcement activities.

Given that the NRC has not completed all

of these reviews there may be areas that we cannot discuss with you today. And while the NRC is prioritizing the review, the Agency will not authorize restart of the facility until it is determined that the restart will be protected of public health and safety.

Presenting today for the staff will be Patrick Boyle, who is the project manager for NIST. And Tom Newton will be presenting for the Licensee.

I look forward to the discussion today and hope that we can provide you with valuable insights on this event. Thank you again. And I'll turn it over to NIST if there aren't any questions.

MR. NEWTON: Thank you, Joshua. I would first of all like to introduce my colleagues from NIST. So I'm Tom Newton, a deputy director of NCNR and the chief of reactor operations and engineering. And I'd like to have my colleagues introduce themselves as well.

MR. DIMEO: My name is Rob Dimeo. I'm the director for the NIST Center for neutron research.

MR. DEWEY: I am Steve Dewey. I'm the chief of health physics at the NCNR.

MR. BRAND: I'm Paul Brand. I'm the chief of reactor engineering.

MR. STRADER: And I'm Randy Strader. I'm chief reactor operations.

MR. NEWTON: Thank you, gentlemen. I will now start the sharing of the slides here. I trust you can all see that.

So what we're going to talk about today is, first of all, we're going to talk about the reactor and describe the reactor and the fuel. Then talk about the February event in some detail. Followed by corrective actions and, well, root causes and corrective actions.

So first of all, the NCNR, the NIST Center for Neutron Research, is one of three major neutron science centers in the United States. The other two are at Oak Ridge National Laboratory, the spallation neutron source and the high flux isotope reactor.

We have a total of 30 neutron instruments that are supplied neutrons from the reactor. The ones over here on the right are all in our guide hall that are supplied, that are focused on our liquid hydrogen cold source. Our large liquid hydrogen cold source. So these are all cold neutron instruments.

The ones that are sort of the center here are mostly thermal neutron instruments, with the exception of the BT9 instrument, which it has its own

liquid hydrogen cold source.

So all of these beams are oversubscribed by a factor of at least two. So there is a high demand for our neutrons. And we support greater than 3,000 research participants at the NCNR every year.

As I mentioned though, the neutrons are supplied by the 20 megawatt reactor, the NBSR. And the reactor operates on a 38 day fuel cycle.

This is a view of the reactor. A cutaway view of the reactor. We have 30 fuel elements in the reactor. Each of these elements have a hat on top that we use for moving.

These elements are inserted into the lower grid plate, which is where the nozzle meets up with the flow of heavy water through the reactor. And then they're latched in the upper grid plate here.

We have a split core with a flux trap in the middle. So there are upper and lower fuel sections with a gap in the middle for a peak of thermal neutrons and to lower the amount of gamma rays that go out to the beam tubes and the liquid hydrogen cold source.

The reactor is controlled by four shim safety arms, which are made of cadmium. They are rotated by the shaft outside the reactor so it's a

shim a four motion that the elements, the shim arms are moved. Total travel is about 40 degrees from full in to full out. Criticality is roughly half way or so when we startup a fuel cycle. There is also a small regulating rod here we use for fine tune control.

As I mentioned, it's a heavy water reactor. So it's heavy water cooled, moderated and reflected. We have two plenum of inlet from the primary pumps. So the heavy water flows through the reactor at a flow rate of about 9,000 gallons a minute. And during full power operation that results in about a 15 degree Fahrenheit temperature change across the reactor.

The fuel itself is HEU fuel. Uranium oxide U308. It's a dispersion fuel with aluminum dispersant. And it's clad and aluminum.

We have an interior of the reactor, there are 17 fuel plates. There are actually 34 since there are upper and lower sections. The outer plates here are just aluminum, there is no fuel there. So all the fuel, of course, is in the center. We have a total loading of about 350 grams of uranium-235 per fuel element.

The way we do our refueling. We have four new elements that we added at the outside of the core.

And every other fuel element is moved during the refueling to a different position wherein that the more burnt elements are in the center and the less burnt elements are on the outside. And that runs for 38 days until we run out of reactivity and start the process over again.

Each element is in for either seven or eight cycles. So when we put those four new elements in we discharge four. Two of which have been in for eight cycles and two of which have been in for seven cycles.

And because it's heavy water coolant, the refueling is done by feel and by hand. We can't mix the heavy water with the air because it could, first of all, degrade the heavy water. And second of all, you could expose the personnel to triuranium from the heavy water. So everything is done by feel.

This is a picture over here on the right of a refueling we done a number of years ago. This is a new element that's getting ready to be put into the core. They're going to hook it up to this extension rod, lower it into this hole here, and then use these transfer arms to transfer the element across the core to the position it needs to go into.

We have a refueling tool that's dedicated

to each position. So once the element is in position, the refueling is hooked up to that element and then lowered down into the core. And then lastly, the position into the upper grid plate.

And to make that a little clearer, I've got a little video here that I'll show you. This is the refueling tool that's hooked up to the top element head. The element right here suspended above the upper and lower grid plates. And you'll seen in the video, it's going to get lowered into the section. And then we'll zoom in a little bit and you'll see how the latching mechanism works.

(Whereupon, the video was played.)

MR. NEWTON: So here is the element lowering into position. Now it's in the lower grid plate. And now the tool will be pushing the element against the spring. The hat against the spring.

You can see this is the latching mechanism that runs underneath the reactor and then it's then rotated over and then brought into a notch underneath the upper grid plate. And then it's latched into place and the tool is removed.

So, moving now to the event. On January 4th, about a month before, we did a refueling in preparation for a re-startup. It was a relative

routine refueling. Latching and latch checks were done after the refueling was completed.

After the event was done, and we used video surveillance to find out what the heck happened here, we found that the latch checks were not done correctly. As a result of that, an element that had been in for one cycle, a second cycle element was not latched into position.

And I want to emphasize this diagram we see here. It's the way we found it after the event. So there is a little speculation as to what it looked like before all that happened.

One other factor is that we delayed startup about a month because of COVID concerns. And so we decided to start the reactor on February the 3rd instead.

As part of that procedure, since it was January, we needed to keep the primary system cool and the secondary system warm so about every day we would start and stop the primary pumps. And the speculation here is that the starting and stopping of the pumps pushed this element out of position away from the flow. So then it became resting on the lower grid plate without any flow to it.

Even though this out of position flow and

pressure instruments didn't show any anomalies so there was no detection that this was out of position.

MEMBER SUNSERI: Hey, Tom, this is Matt.

MR. NEWTON: Yes.

MEMBER SUNSERI: Just a quick question here. How much do those fuel elements weigh?

And have you thought about, is the reactor coolant pumps, is there sufficient flow to cause a lift, enough lift force to move it?

MR. NEWTON: Yes, there is. There's definitely, we've actually seen this before. The elements weigh, I think about 1 kilogram. Randy, is that right? Twenty pounds maybe.

MR. STRADER: Yes. It's about 40 pounds.

MR. NEWTON: Forty pounds, okay.

MR. STRADER: Yes.

MR. NEWTON: Yes, so 20 kilograms. So yes, there is definitely sufficient force to move the element out. And that's one of the reasons we have it latched in the grid.

MEMBER SUNSERI: Yes. No, I understand. Okay, great. And just so it will help out the members a little bit, if you can pause every now and then and let members interject questions or comments as they go.

MR. NEWTON: Okay.

MEMBER SUNSERI: Thank you.

MR. NEWTON: Feel free to interrupt also.

MEMBER SUNSERI: Yes, no problem.

MEMBER HALNON: Hey, Tom, this is Greg Halnon.

MEMBER PETTI: Hey, Tom?

MEMBER HALNON: Dave, you want to go ahead? I can wait.

MEMBER PETTI: I just wondered, the last bullet. Do you guess have flex source range monitors and --

MR. NEWTON: Yes.

MEMBER PETTI: And they didn't see anything?

MR. NEWTON: Well, we didn't start up the reactor until February 3rd so we didn't, the neutron instruments are not seeing anything --

MEMBER PETTI: Ah.

MR. NEWTON: -- up until the startup. And I'll kind of go over that --

MEMBER PETTI: Okay, thanks.

MEMBER HALNON: Okay. Yes, this is Greg. Just a couple of questions from a dimensions perspective.

The bottom pin that was supposed to be in the hole, it's moved over how far? What is that dimension?

MR. NEWTON: I would guess maybe about four or five inches.

MEMBER HALNON: Four or five inches. Okay. I was just trying to get some context.

MR. NEWTON: Okay.

MEMBER HALNON: And then in the upper portion, where the fuel plate sticks through the upper tube sheet, or upper plate, is there clearance there that you have in your mind or is there, how big is the square hole and how big is the plate going in?

MR. NEWTON: It's about four-by-four or something. Randy, maybe you could, do you know the dimensions of that?

MR. STRADER: I don't know the dimensions exactly --

MEMBER HALNON: Okay.

MR. STRADER: -- but there is about a half inch to three quarter inch gap total around.

MEMBER HALNON: Okay. So there is not a tight clearance there?

MR. STRADER: No. It's not a tight clearance, no.

MEMBER HALNON: Okay. All right, thanks.

MEMBER SUNSERI: And Ron Ballinger has his hand up. Ron?

MEMBER BALLINGER: Yes, thanks. With respect to the 1, 2, 3, third bullet, the second element was not latched. Is there a checklist similar to, for lack of a better word, a pilot's checklist where you have a procedure where more than one person has to sign off or verify that something is done?

MR. NEWTON: Yes.

MEMBER BALLINGER: Or was there?

MR. NEWTON: Yes, there was a checklist. The folks that did the check actually thought they did it correctly and signed off on it. And then we found out later they didn't do it correctly. So all the paperwork was in order but it was not correct.

MEMBER BALLINGER: Thanks.

MR. NEWTON: Sure. Other questions? Okay, I'll proceed then.

So the event on February 3rd. We did a, what we thought was a routine startup. We began the startup at 8:16 in the morning. We leveled off at ten megawatts, as we do per procedure, at 9 o'clock. At 9:06 we begin at essentially full power. And at 9:07, before we reached full power, there was a sudden drop

to about seven megawatts or so followed very shortly thereafter by a release of fission products in our, that was detected in our fission product monitor with the cover gas that leaves the reactor.

Right after that the fission products reached the stack radiation monitor which reached the set point of 50,000 counts per minute, which resulted in what we call a major scram. A major scram not only scrams the reactor but also seals the confinement building to limit any releases.

At 9:16 we declared an alert. At 9:21 we had to evacuate the control room. Got a high radiation levels. And the control room is located just outside the reactor top area, which is fairly typical in research reactors. And at 9:29 we notified the NRC.

I've got a graph here of the event. This is from a program that we call the reactor to a desktop, which take a takes a sampling of data. So it's good for trending but it's not necessarily great for seeing all the peak numbers and stuff.

So just to orient you here. The green line here is the shim arm position. The black line is reactor power. The red line is the stack radiation monitor. And the blue line is the fission product

monitor. This is the monitor that is the first to see the fission products leave the reactor.

So we leveled off the reactor power level at about a megawatt early on in the morning. And then we --

MEMBER BROWN: Excuse me, what was the green line again?

MR. NEWTON: The green line is the shim arm position. This is basically control --

MEMBER BROWN: Oh, okay. I got it. All right. Then I missed it. Thank you.

MR. NEWTON: Okay. And then we raised power, as I said, about 9 o'clock and leveled off at ten megawatts. And you can see there is some oscillations here. We believe these oscillations are due to departure from nuclear boiling in that element.

This was found in the nuclear instrument somewhat, but it didn't reach a threshold by which the operator thought it was sufficiently abnormal to take action.

Then we raised power up to, close to full power. Here is the sudden drop at seven megawatts down to seven megawatts or so. We calculated this later to be about 35 stents of negative reactivity.

You can see right as it drops. And then

we have sharp increase in the fission product monitor. And once the fission products reached the stack, the stack monitor went up precipitously as well causing the major scram. You can see the scram happening here.

And once the confinement building is sealed then the stack monitor drops off due to lack of airflow.

VICE CHAIRMAN KIRCHNER: Tom?

MR. NEWTON: Yes.

VICE CHAIRMAN KIRCHNER: This is Walt Kirchner. The primary coolant system, it's the heavy water cooled system. Did the pressure boundary leak? Why did you see things in the stack?

MR. NEWTON: Oh, no. This is not pressure boundary leak this is a normal, the helium above the reactor is not a sealed system, it is part of our ventilation system that, that we would normally expect to see that.

Randy, do you want to comment --

VICE CHAIRMAN KIRCHNER: So the primary coolant system is not a fission product barrier?

MR. NEWTON: It is. Maybe I've --

(Pause.)

MR. NEWTON: I guess that's a good

question. Well it's not sealed but it is a fission product barrier.

MR. STRADER: It still contains --

(Simultaneous speaking.)

MR. STRADER: It still contains most of the fission products in an event like this. Some of the fission products, like the noble gases, come out in the helium.

And there are, it's not a sealed system on top. So they --

VICE CHAIRMAN KIRCHNER: So it's a cover gas --

MR. STRADER: Yes.

VICE CHAIRMAN KIRCHNER: -- like system --

MR. STRADER: Yes.

VICE CHAIRMAN KIRCHNER: -- and that's the path of escape for the gaseous fission products?

MR. STRADER: That's correct.

VICE CHAIRMAN KIRCHNER: Thank you.

MEMBER HALNON: Tom, this is Greg Halnon. Can you just briefly tell me what the operators were seeing real-time during this oscillation of the power? I mean, did they notice it?

MR. NEWTON: Yes. Well actually, I've got a backup slide here. I guess I could stop sharing and

go down to, maybe just scroll down to that and it will probably help you a little bit better.

Let me see, how do I do this. So there it is. Okay.

This is what the reactor operator saw. And of course we have the benefit of not only 20/20 hindsight but comparing a normal startup with the startup on February 3rd. So you can see normally we level off at ten megawatts. And there is a little bit of oscillation used in a normal nuclear instrument noise.

And then you can see ten megawatt is significantly higher. One of the things we looked at when we started looking at this event in detail is the training on folks as to what is abnormal was a little informal I guess I should say.

We had a couple of earlier events back in the '80s and '90s where we started up the reactor with a loose fuel element, and they saw significantly higher oscillations due to what we think is attributed to elements kind of bumping around in the flow with probably some boiling going on at the same time.

And that was informally told to the operators it's five to seven percent of oscillations. And if you really crunch the numbers here you see

these oscillations are about four percent or something.

Clearly it's not normal, but it didn't really reach the threshold to alert the operator. And this was an experienced operator.

MEMBER HALNON: Okay. So the previous issue from back when you said you had the oscillations, the fatter lines just didn't peak their interest about what was going on in there, they just assumed something was normal with it?

MR. NEWTON: Yes. There was a couple of other contributing factors there, that we just replaced the controller, the cycle four. And there was some uncertainty there.

MEMBER HALNON: Okay. All right, thanks.

MR. NEWTON: All right. Let me run back to where I was before. Let's see, where was I. Okay. Any other questions on the graph? Okay.

In that response. As Joshua mentioned, all systems operated like they were designed to do, as expected. We of course test these before startup.

The operators and health physics staff did effective response. They did what they were supposed to do and what they were trained to do.

As I mentioned, the radiation levels in

the control room necessitated evacuation. The emergency instruction criterion is that we evacuate if projected exposure to anybody in the control room is going to exceed 300 millirem.

The two operators stayed briefly behind to start some shutdown activities. And then we had a reentry later that day into the building to complete those shutdown activities.

And as a result of all this we had about ten staff members that were contaminated due to the event. They were successfully decontaminated and then sent home later that day.

MEMBER HALNON: Tom, real quick, Greg.

MR. NEWTON: Yes.

MEMBER HALNON: This is Greg again. When we talk operators, are we talking licensed operators, senior or reactor operators?

MR. NEWTON: Yes. I believe there was some trainees there as well, but most of them are licensed operators.

MEMBER HALNON: Okay.

MR. NEWTON: Is that correct, Randy?

MR. STRADER: Yes, that's correct.

MR. NEWTON: Okay.

MEMBER BROWN: Can I ask a, this is

Charlie Brown, can I ask a question also?

MR. NEWTON: Sure.

MEMBER BROWN: You noted that two operators briefly stayed behind to start shutdown actions. There is no, obviously they were still in the radiation area, in the control room, to do that. Is that the assumption that's correct?

MR. NEWTON: Yes.

MEMBER BROWN: Okay. So there is no remote station where these similar actions can be taken?

MR. NEWTON: We have a remote monitoring station that we can monitor things. There is some ventilation controls there but they don't have enough controls to do things like start and stop pumps and things like that.

MEMBER BROWN: Okay.

MR. NEWTON: But we do have a remote station but it's not a complete remote --

MEMBER BROWN: It can't shut down and control stuff after the event is, once you've got a radiation problem in the control room.

MR. NEWTON: Yes. And keep in mind that once the reactor scram we don't have decay heat problems. As long as the pumps stay on we're good to

go there.

So they stayed behind, first of all, because they're projected exposure was really probably not going to exceed 300 millirem if they're there for a couple more minutes. Just to take care of a few actions that they thought were necessary.

MEMBER BROWN: Well, if those actions weren't taken, even though it's scram, is that a problem?

MR. NEWTON: No.

MEMBER BROWN: So if they hadn't stayed, my question is, if they hadn't stayed behind, the plant scrammed --

MR. NEWTON: Yes.

MEMBER BROWN: -- would there have been a problem if they hadn't been able to take those subsequent shutdown actions?

MR. NEWTON: No. Randy, you want to comment on that further?

MR. STRADER: No. Because we still have forced flow. The shutdown pumps come on. And so that would take care of all that. There were some actions if we wanted to take the plant, a better situation so when we're in our emergency control station we're able to monitor things more accurately.

MEMBER BROWN: Okay, thank you.

MR. NEWTON: Okay. Personnel doses. We had a recorded total maximum dose of the maximum personnel of about, a little over a rem.

And you can see the table here, all this is a deep dose from the dosimeter. Of course the annual limit from NRC is five rem, so it's well below that.

We believe the doses are overestimated because the dosimeters, as part of the event, got contaminated. And it was a while before they were decontaminated. And so we think the contamination of the dosimeters itself contributed to that dose.

But to be conservative, we assign that dose anyway. The EPD actually only shows 182 milligrams to the maximum exposed person.

We also did internal monitoring to see if there were any uptake of fission products. The only thing we saw was tritium, which is what we typically see in reactor operators as they do get some internal tritium dose. But there was no internal dose due to the event itself we believe.

MEMBER SUNSERI: So that was my question on that slide. So it is retained for operators to receive internal dose from tritium?

MR. NEWTON: Somewhat, yes. As part of the refueling process you do get a little tritium exposure just from moving things in and out of the heavy water.

MEMBER BROWN: You noted that the dosimeters were contaminated. Is that a normal circumstance?

MR. NEWTON: Well no. I mean this was a lesson learn we have that we collected their dosimeters as folks existed the control room as part of the decontamination, the personnel decontamination process. And they were collected and put in a bag. And it was a while before we got the bags sorted out and decontaminated.

Steve, do you want to say anything else about that?

MR. DEWEY: You got it exactly right. It is abnormal for dosimeters to get contaminated. We do on occasion, when work is going on in high contamination areas, we usually try to take precautions in that case. But in this case this was an unusual event, obviously. And the dosimeters getting contaminated was not anything routine.

MEMBER BROWN: So that was --

MR. DEWEY: And -- okay.

MEMBER BROWN: That was due to being in the control room then?

MR. DEWEY: Correct. Correct. So when the event occurred from the reactor vessel, the top of the reactor vessel is not complete sealed. So when the noble gases came out of the top of the reactor into the area of above the reactor, they also entered the control room.

So the short, the decay product from the noble gases deposited on the dosimeters and on the personnel as well too. So that's where the source of that dose came from.

MEMBER BROWN: And also the control systems, right? I mean, the panels and everything else --

MR. DEWEY: Correct.

MEMBER BROWN: -- you stated. Okay, thank you.

MR. NEWTON: Now we'll kind of shift into why we declared an alert. This is from the emergency classification criteria for the environmental emergency instructions.

Initial criteria for an alert is RD-401, which is a stack monitor, reaching set point of 50,000 counts per minute. Then you drop down the action

level criteria as to whether or not you declare it. And on 2.2.2 here, evidence of fuel cladding failure by the high helium sweep activity, and that was the blue line I showed you on the graph, reaches 50,000 counts per minute.

So clearly we had a fuel cladding failure which lead us into the alert situation. So that's when we declared it.

Now the kind of hard part is now determining what the effluent doses and levels are at the site boundary, which is what I'll discuss next. On the boundary we have a 400 meter radius boundary around the reactor as our emergency planning zone. This is all within the NIST campus so there was no overlap of offsite properties.

During the event, right after the event we took multiple air and particulate samples. Both at the site boundary and at the stack. The level that the site boundary were either low or none detectable and so it led to a lot of uncertainty as to what, taking those measurements as to how that, how we can quantify that.

So we eventually used the stack samples, which there was a lot more data from. And dilution factors, which is allowed in the emergency plan, to

determine what the offsite, the 400 meter site boundary doses are.

So as a result of those determinations we downgraded to a notification of unusual event at 1532. And then terminated the emergency at 1935. These were the points at which we had made definite determination that those samples were indicated at the levels were, that level or below.

MEMBER HALNON: Tom, this is Greg. What was the weather that day?

MR. NEWTON: It was fairly clear I think. And it was a bit windy out. Steve, do you know? Did you do a determination on atmospheric conditions?

MR. DEWEY: I'm not sure off the top of my head. I certainly can get that but I don't remember.

MR. NEWTON: Okay.

MEMBER HALNON: Okay. Do your sampling procedures take that into consideration, that site and boundary depending on air, wind direction --

MR. NEWTON: Yes.

MEMBER HALNON: -- time of day, inversions, other things that may be occurring?

MR. NEWTON: Correct. Yes, everything was taken down wind and at the appropriate locations as best we can determine.

MEMBER HALNON: Okay, thanks.

MR. NEWTON: We'll now talk about isotopes a little bit. As you can see, the majority of the release activities were as expected for fission product noble gases, xenons and kryptons.

We had a total release during the event was of about 30 curies of those noble gases. Again, these are based on the stack samples. The boundary samples show many isotopes of xenon and they were very, very low so it was hard to quantify.

Initially we estimated the dose to the public to be less than .5 millirem. NRC and DOE independently confirmed that. And DOE later on did a full dose estimate and turned out to be about eight microrem at the boundary level.

You can also after the event we returned to normal ventilation on February 6th. And over the next six three months released about another 15 curies or so. Resulting in about six microrem or something of activity.

And you can see the differences in activity levels between the event and three months afterwards.

We didn't see any iodine at all in the release initially for two reasons. One, it stayed

mostly in the primary coolant system. And secondly, our emergency ventilation has charcoal filters which would absorb any remaining iodine.

Once we restarted normal ventilation those charcoal filters are no longer in service and so we saw just a smidgen of iodine-131 over the next few days.

We had a little bit of cobalt-60 also in one of the samples that we think was cross contamination.

Effective, the 10 CFR 20, annual release limits, is 10 millirem a year for a facility. Typically we run about quite a bit less than that. Our normal releases are argon-41 and tritium with an annual boundary of about .8 millirem. Something like that.

As I mentioned before, the event total boundary dose was about 14 microrem, which is two percent of what we normally release.

Now we have in our safety analysis report the maximum hypothetical accident, which is a complete melting of maximum activity fuel element. Which results in a calculated dose of 6.4 millirem. And we were orders of magnitude below that. So we're well bounded by the MHA.

Okay, shifting a little bit. On the 23rd of February we were able to get a video camera and start video surveillance of the core itself.

One of the first things we saw out of normal was this element out of position. You can see a normal element next to it, H-6, is in position. This one is clearly up.

The other thing to look at is this latch. This is the latch you saw in the video. This latch is not over where it should be. Obviously it's in the element window. And so this is clearly out of position and clearly unlatched.

Then once we were able to get down to the lower grid plate we took a look at this nozzle of the element that was out of position. And you can see we also have evidence of previously molten material that's sitting on the lower grid plate.

CHAIRMAN REMPE: So do you know, or have any idea or suspect what that material is?

MR. NEWTON: Well, it's at least aluminum.

CHAIRMAN REMPE: Yes.

MR. NEWTON: And we're sure --

CHAIRMAN REMPE: Do they think that it's got anything else besides aluminum in it?

MR. NEWTON: We --

(Simultaneous speaking.)

MR. NEWTON: We haven't done a complete PIE of all this material yet. We were speculating it's mixed fuel and aluminum.

CHAIRMAN REMPE: Thanks.

MR. NEWTON: And of course there is also fission products in the system that we have seen. So clearly those fuel, or at least fission products, have escaped.

As a result --

MEMBER SUNSERI: Excuse me, I think Ron has a --

MR. NEWTON: Oh, he does. Okay.

MEMBER SUNSERI: Ron has another question.

MEMBER BALLINGER: Yes. I'm looking at this picture and then I'm looking back, I'm remember back at the cartoon of the latching thing. And I'm also remembering the statement that the operators believe that they had done the procedure right.

And that's awful hard for me to reconcile given what I'm seeing. So I'm assuming that we'll hear a bit later about corrective actions related to this.

It's just hard to see how this could be signed off on.

MEMBER HALNON: Well this is not visible, right?

MEMBER BALLINGER: Well, it may not be visible but you're turning a wrench at the top effectively. And that wrench isn't going to move, that thing is not going to latch and you're not going to be able to move that.

But again, I'm looking at a cartoon plus a video so I could be completely wrong.

MEMBER SUNSERI: This is Matt. Ron, I think you're getting ahead of them a little bit. They will talk, I'm sure they'll talk about this. I looked ahead in the presentation.

MR. NEWTON: Well, just to kind of put a little bit of emphasis on that, the latch check that was done after the fact, one of the things we found is they turned it in the wrong direction. And so that was a lot of confusion. Clearly some training issues and procedural compliance issues that I will talk about in a bit.

MEMBER BALLINGER: Thanks.

MR. NEWTON: Sure. So as a result of the video surveillance, and other things, we made a conclusion on March 5th that we exceeded the 450 degree fuel safety limit and reported that to NRC in

accordance with our tech specs. And as was mentioned earlier, that the reactor was shut down, obviously, and operations are not going to be resumed until NRC authorizes restart.

(Telephonic interference) on the failed fuel element and identified it was element number 1175. It was originally introduced into the core on October. The previous October. It ran a full cycle no issues, no problems there.

We also looked at, took a good hard look at the QA records and manufacturing and inspection and all that sort of stuff and identified there was no anomalies. So this was a normal element that was clearly out of position.

Sometime last summer we began procedures to remove the failed fuel element. Here is another picture of this element sort of from the side. You can see the nozzle and previously molten material on the lower grid plate. The nozzle, the hole here where it would normally go is over here. You can't really see it that well.

And then once we pulled the element up you can see all of the molten, the previously molten material stayed with the element. Which is good news there. It didn't abnormally effect the lower grid

plate in any way.

Then we moved the element. We had a debris cap here sitting on where the element would normally go to catch any debris that might come off the element. And we eventually removed these pieces here prior to removal. Removal.

And then over here on the right here you see, looking up at the bottom of the fuel element you can see all of this previously molten material pretty much accumulated all in the nozzle area. Again, we haven't done any PIE to know the exact amount of fuel that as melted, but clearly significant.

CHAIRMAN REMPE: So just to make sure I understand, the nozzle itself is probably stainless or something else?

MR. NEWTON: It's aluminum.

CHAIRMAN REMPE: The nozzle itself that looks pretty nice and undamaged at the bottom is aluminum. So this is stuff coming from above that's dribbled down is what you're thinking?

MR. NEWTON: Correct.

CHAIRMAN REMPE: Okay.

MR. NEWTON: Paul, Randy, do you want to comment on this at all?

MR. STRADER: Yes.

MR. BRAND: The nozzle was, I'm sorry, this is Paul Brand. You want to answer, Randy, that's fine.

MR. STRADER: All I was going to say is that the fuel is located well above the nozzle. So it's traveling through the moderator after it melts. And the fuel is about, it's about, I'm doing the math in my head, it's about five inches away.

CHAIRMAN REMPE: So I get the fact that it's hotter up in the middle of the core than down at the bottom, but it's interesting it didn't freeze and it got all the way down there and accumulated. Any, it will be interesting to see the photos as they come out.

MR. BRAND: Yes. I would, let me add, which is partly speculation. But let's assume that the inside of the fuel element was sort of evacuated by steam so the melt was capable of moving down.

And this nozzle that you're looking at was constantly being cooled by the water that's standing around it. So it becomes a cooled form over the aluminum for the fuel melt to solidify in.

CHAIRMAN REMPE: Yes. And just, again, I look at lots of pictures of other fuel that has degraded in melt and usually it dribbles and candles

down. And even, anyway, it will be interesting to see how this behaves in a different way.

VICE CHAIRMAN KIRCHNER: Well, with the, Joy, with the nozzle not in the correct position the force flow is not there. There is probably substantial, if not complete voiding, inside the fuel element because it's canned.

CHAIRMAN REMPE: Yes. Well, you've seen the curved plates and so yes, I get it that there is a gap between the plates. But it's just interesting that it made it down in such a mass.

But it would be interesting to see if there is any sort of hold up or it just always falls straight down. But anyway, it will be interesting is all. Thank you.

VICE CHAIRMAN KIRCHNER: But this picture on the right shows clearly though that the nozzle is all clogged up, right?

MR. BRAND: Yes.

VICE CHAIRMAN KIRCHNER: All the melted material sealed off the bottom, you know, it pooled right there. Right?

CHAIRMAN REMPE: Yes.

MR. BRAND: Yes. Right above the, the inside of that nozzle is cylindrical up to the point

where you see on the outside this conical structure that leads with a bar like structure. The inside is the same. There is no conical structure.

The presumption is, the assumption is that the amount of liquid that is in there exceeds the height of the cylindrical structure and actually plugs into the conical structure on the inside. That's why it's trapped in there. It can't get out.

MEMBER PETTI: Just a question. The grid plate, is that aluminum as well or is it steel?

MR. BRAND: It's aluminum.

MEMBER PETTI: Aluminum.

MR. BRAND: Right, Randy? Is that correct?

MR. STRADER: Yes, it's aluminum.

MR. BRAND: Okay.

MEMBER PETTI: Okay, thanks.

MR. STRADER: It's about, I think about three inches. Three to four inches. I can't remember exactly the dimensions.

MR. NEWTON: Okay. I'm going to kind of shift now to root causes and corrective actions if there is no more questions about the event or the fuel or anything. Okay.

MEMBER SUNSERI: Please go ahead. Thank

you.

MR. NEWTON: All right. Okay, so shortly after the event we formed a technical working group to look at root causes of the event. It took us a couple of months to talk to everybody and get everything together.

And we found there were inadequacies, clearly inadequacies in training and procedures of fuel action. The procedures were not written well enough and the training clearly was inadequate.

Procedure compliance was also inadequate. And management oversight of the process was also inadequate. So we reported that to NRC in May.

June we of course completed, continued to investigate. We found that there was a possibility that by lowering the element that the fuel handling tool onto the element with sufficient force you could actually inadvertently unlatch the element without meaning to.

And the reason this is important is, part of the thing we did was the height check. The height latch check, which we don't do anymore, but we did do. You could, in the process of doing that height check, inadvertently unlatch the element. And there is some speculation that this is actually what happened.

Our reactor oversight committee, the safety evaluation committee formed an investigation after the first one was done to verify root causes, to look at the response. And to review all of that and look at corrective, possible corrective actions. This was both internal and external folks that formed this committee.

They completed the report in August. They agreed with all of the root causes that were originally found and they added two additional root causes. A lack of change management program and a culture of complacency and the reactor operations group. They also recommended 24 corrective actions and program improvements, all of which we have agreed to do.

And amongst --

MEMBER SUNSERI: And I think that, excuse me, Ron, I think this points to some of your questions or concerns.

MEMBER BALLINGER: Yes, it does. I'm glad that they tagged what they called a culture of complacency because that's a very hard thing to deal with if you have, or to understand the impact on that because if nothing has happened at a plant for a very, very long time, it's just natural human nature.

And that trends, that kind of cascades down to a situation where you have difficulty in determining what's not normal. And generally speaking, for one of these plants, at any of these plants, I was operating a plant, and a wrench turner for a long time, if something is not normal, it isn't normal.

And the problem has always been, what isn't normal. If you're in the plant and you know something is odd, at what point do you say that it's too odd. And this complacency, which is human nature, I mean, goodness, really hurts in that respect.

MR. NEWTON: Couldn't agree more.

MEMBER BALLINGER: I mean, by the way, it's complacency on the term of, on the point of, on the part of management as well as the technical staff.

MR. NEWTON: That is correct.

CHAIRMAN REMPE: So out of curiosity, were the persons involved in installing the fuel, you mentioned you had some interns or trainees as well as licensed staff or something. Were they experienced employees or young learning employees?

MR. NEWTON: Well that was one of the issues we had with this event is the folks that did the latch checks were very junior. A couple of them

had never done it before. And the one that had done it before had only done it a couple of times. And so clearly we had some training issues that we didn't foresee.

CHAIRMAN REMPE: Thank you.

MEMBER BALLINGER: This is Ron again. You know as well as I do that I don't believe that this kind of misplacement could happen at the MITR, am I right?

MR. NEWTON: Well, it's a different latching mechanism.

MEMBER BALLINGER: That's what I mean. The latching mechanism. The ring that has to be rotated --

MR. NEWTON: Yes.

MEMBER BALLINGER: -- simply, this simply can't happen.

MR. NEWTON: Correct.

MEMBER HALNON: Tom, this is Greg. Are you going to go through the corrective actions in more detail or is this --

MR. NEWTON: No, I've got several slides on corrective action.

MEMBER HALNON: Okay. Because I got some questions that I want to kind of run through on the

complacency relative to the actual fuel latching and fuel changing process versus backing up into the management culture, into the industry culture.

MR. NEWTON: Yes.

MEMBER HALNON: So I'll wait and see.

MR. NEWTON: Okay.

MEMBER HALNON: All right.

MR. NEWTON: Yes, I should be able to address those I think. Okay.

First of all, management corrective actions. We are doing a top to bottom change management program of improvements. We have elevated the aging reactor management program to include tracking of overall big tracking of things that could not only effective nuclear safety but other things that they could, they put in their purview.

Organizational realignment, including requiring all operators to go through a training shift. This will be about a, roughly once a month rotation. And all they'll be doing in that rotation is training.

We are overhauling every single one of our procedures. More than 500 procedures. And doing audits of compliance to make sure folks are following those new procedures. And we're vastly expanding our

corrective action program to manage all these changes.

We are also establishing continuous improvement program. We have required all staff, this is all staff from reactor operations, reactor engineering, health physics and safety to participate in detailed corrective action implementation and recovery tasks. They've been doing that now for a year. Almost a year.

And it's not going to stop when we start the reactor back up. Every time we identify a corrective actions as part of this change management program these folks will be involved in that.

We are instituting safety culture changes throughout the organization. And that's got to be integrated in our training and our procedures and everything else. And we talk about that on at least a weekly basis about the safety culture practices and things.

And finally, we're benchmarking ourselves with other facilities. Not only in the U.S. but also around the world.

MEMBER PETTI: Tom?

MR. NEWTON: Yes.

MEMBER PETTI: How often was training? You said you're now implementing additional shift of

training. What was the baseline before?

MR. NEWTON: Well we had, of course a biennial re-qualification training which was clearly inadequate. And most of the other training was on the job. I'll talk about that here in a little bit about how we're going to fix out training program.

But it was a bit, say, call it an apprentice program maybe that clearly didn't cover all the details that were needed to cover in training. And so with that, maybe I'll move on to the next slide.

But we are now --

MEMBER BROWN: Before you do that?

MR. NEWTON: Yes.

MEMBER BROWN: This is Charlie Brown again.

MR. NEWTON: Okay.

MEMBER BROWN: You said the training is biennial. Is that every two years you're talking about?

MR. NEWTON: Yes. That's the NRC requirement.

MEMBER BROWN: Okay.

MR. NEWTON: That's the minimum.

MEMBER BROWN: But in that interval, new

people come in and out so --

MR. NEWTON: So that's a different program.

MEMBER BROWN: -- training maybe for a year before, I mean, how do new people get introduced without going through a training program?

MR. NEWTON: We have a training, have and have had a training program for new individuals that's parts of, and we've implemented qualification cards and stuff recently. And that will be implemented further in our new training program.

But yes, it's a different program training versus folks that are already licensed. And it was a mix of both of those during the event.

MEMBER BROWN: Okay, thank you.

DR. SCHULTZ: Tom --

(Simultaneous speaking.)

MEMBER HALNON: Tom, this is Greg again.

MEMBER SUNSERI: Wait. Hold on, Greg, Steve Schultz has got his hand up first.

MEMBER HALNON: Oh, sorry.

MEMBER SUNSERI: Then we'll go to you. Steve?

DR. SCHULTZ: Tom, this is Steve Schultz. The presentation here, associated with continuous

improvement, it mentions safety culture and benchmarking with other facilities. These types of programmatic features have been in the nuclear industry now for over 20 years and are continuously practiced at nuclear facilities.

Why is this coming out as an improvement that needs to be done at the facility? In other words, it seems like this is a new thing for the facility and would suggest that you have not been, or the facility, not you particularly, but the facility has not been up to speed with what has been happening in reactor safety practices.

MR. NEWTON: Well, right. Well, as Ron mentioned, we have a culture, we identified a culture of complacency. And you really have to step it up a notch, or more than a notch, to implement all these programs.

We did have some safety culture training but it clearly was not adequate. And we weren't practicing what we preached. And so we're going to make sure that that is taken care of in everything we do.

DR. SCHULTZ: Thank you.

MEMBER SUNSERI: Okay. Go ahead, Greg.

MEMBER HALNON: Yes, kind of along the

same lines. In the commercial industry, where I came from, we have a gold standard that we go to get our baseline safety culture requirements, safety culture stuff. And we use the INPO, Institute of Nuclear Power Operators.

What do you guys go to? What is your standard that you go to when you say, okay, I got to rewrite this procedure or I got to change this culture, I got to do this, where do you go to get what the A+ looks like?

MR. NEWTON: Well we're now implementing INPO 11-003, I think, in our procedures. And so we're looking in the INPO guidance for safety culture and procedures and things.

MEMBER HALNON: Okay. And you probably got that through the NRC I assume.

MR. NEWTON: Yes.

MEMBER HALNON: Are you members of INPO?

MR. NEWTON: No, but we've gotten the, we have --

MEMBER HALNON: Okay.

MR. NEWTON: -- all the documentation.

MEMBER HALNON: Yes. Well that's a public document, that's not a problem. But I was just curious.

So from that perspective, the industry itself has plenty of corrective action program improvements and other things. And along the same line that Steve was talking about, it seems like there is plenty of information out there that would have, I guess already been established in many nuclear programs. I'm just not as familiar with these types of reactors from the standpoint of that interaction.

And I guess just for the, when you say benchmarking other facilities, what, can you give me an example of what other facilities you'll be benchmarking?

MR. NEWTON: Well, we talked to several research reactors, including Dow Chemical, which has a, of course, an overall safety program. We've talked to ANSTO in Australia, which is also a 20 megawatt reactor, about how they do things.

And we've reached out to a few people here in there to look, and Oak Ridge National Laboratory, to see how they do DOE versus DOC versus all the other programs that are out there. And we're trying to do what, find out what is good and strive to get there.

MEMBER HALNON: Okay. Have you reached out to the commercial industry?

MR. NEWTON: Not yet. But that's also on

our to-do list.

MEMBER HALNON: Okay. Thanks.

MEMBER SUNSERI: Ron has his hand up again.

MEMBER BALLINGER: Yes, thanks. Have you folks taken a look at the two reports that were produced as a result of the Davis-Besse vessel head incident?

Most people look at the Davis-Besse technical root cause report with horror. But the management at Davis-Besse, at the time, also did a management root cause document. And it exists. You got to go find it.

But that document might be very instructive in issues of, dealing with issues of complacency and operational, what do you want to call it, feedback between management and the technical staff. It probably is worth a read.

MR. NEWTON: Okay, we'll take a look at that.

MEMBER SUNSERI: Go ahead, Tom.

MR. NEWTON: Okay. All right, now moving on to training. We are requiring proficiency training for all folks that move fuel. And that includes full qualification with a qualification card. Basically

what they have to know, what they have to demonstrate. And then it has to be documented before they're allowed to move fuel.

We are rewriting all of our training program for better knowledge transfers. I mentioned it was previously an apprentice program which is not really very effective. And so this is going to be detailed training program to put in to place to capture everything that people need to know.

Also we are, our supervisors were a bit inconsistent in how they trained folks. We are now developing standards for those to qualify them for supervision. And also how to oversee folks.

And in addition to that, we're now implementing periodic management reviews of the effectiveness of this training program.

As I mentioned --

DR. SCHULTZ: Tom? Tom, excuse me. This is Steve Schultz.

In reviewing the root cause report, it seemed clear from the evaluations that there was a substantial, or the management that was in place was changing often before this event occurred. And also, there were several interim positions as it was named.

Has that been stabilized as a part of

this? Is there, it seems from your introductions that there has been a focus on stabilizing the management systems within the organization.

MR. NEWTON: Absolutely. Randy Strader here is now permanently our chief of reactor operations. And hopefully he'll be there for some time.

DR. SCHULTZ: Thank you.

MR. NEWTON: Okay. Procedures. As I mentioned, we are revamping all of our procedures to integrate safety into them. We're revising them to the INPO standard for procedures.

In particular we are rewriting our refueling procedures. Of course we're doing all of them. But the refueling procedures are much more detailed now. It used to be, move fuel from A to B. And now it is each detailed movement of what you have to do in order to move, latch and latch check the element.

And other part of that procedure, we're rewriting the tab on reader/worker program where it is a picture of the reader who is sitting outside, or standing outside the reactor top area with folks inside doing the refueling. So he reads the step, they repeat back the step what they're going to do,

they do the step and verify they've done that step. And then they go back and forth and he checks off the things that are all captured and done and documented.

MEMBER HALNON: So, Tom, this is Greg. This is where I think a benchmark with the commercial industry may be useful.

When we move fuel and latch it to pick it up, there are many different measurements that are taken. Weight checks, spring depression checks, height checks, location. Everything that's done. And if something, one little thing doesn't agree, then it's all stopped.

And I think that the cross verification of things, it looks like you're trying to build that into it. You might get some really good ideas on how they do that and how the communication goes with refueling SROs and other people who are there for self-purpose of making sure that everything agrees before anything is done.

MR. NEWTON: That's great. Great idea. We're also changing the refueling procedures to require latch checks not done until the final pump restart. And in addition to rotation check with a verification of fiduciary art. We're also having a redundant person make sure the rotation check is done

properly.

And the new thing we're doing is we're requiring a visual check after all the refueling is done and the latches are in place. We're going to be rolling the camera into the reactor vessel, moving it around to every single fuel element position. So we document that on the video.

We then download the video and do an analysis on the video to verify that each element is in the latch position. That's redundantly checked by another person.

And then after that they, during and after that a video check is done there is no contact allowed to the element. So we have clearly made a verification that the elements are properly latched prior to getting the reactor started up.

And equipment. This is a picture of the visual checks here. This is the camera that goes into the reactor. We have tested this quite satisfactorily. And we're in the process of finishing up the procedures that are going to put this in place for the analysis and such that we're going to be implementing in the next few weeks or so.

We're also assessing the refueling tools. One of the things that, if you read the report one of

the refueling tools that we would replace with were just a little bit different than the old tools. Which created some uncertainty on the height check, the height latch check.

We're also not going to be doing the height checks anymore. So we're going to only do things that completely verify the element is in a latch position.

And one other thing we're going to be implementing is the noise getting in the nuclear instrument channels to take all the subjectivity about whether or not a signal is normal or abnormal. This is going to do a signal analysis to make sure, that alerts the operator if it detects something that's abnormal.

So now I'm going to move on to finish up with our interactions with the NRC. And you're going to --

MEMBER SUNSERI: Tom?

MR. NEWTON: Yes, sir.

VICE CHAIRMAN KIRCHNER: This is Walt Kirchner. May I ask a question about, have you considered any other changes to the actual reactor core systems or design?

The first one that comes to me is that

you're using d, heavy water for moderator. Have you thought of going to light water, so to speak? You give up some neutron production but you wouldn't have all the tritium exposure.

MR. NEWTON: We can't maintain criticality with light water in our current core configuration so it would be a complete reactor --

VICE CHAIRMAN KIRCHNER: I see. Okay. Thank you.

MR. NEWTON: Yes.

MEMBER SUNSERI: Steve?

DR. SCHULTZ: Yes. With regard to the noise gate that you're developing, what do you feel you can achieve with that?

In other words, what capability is feasible that you didn't have before?

MR. NEWTON: Well before, as I showed what the operator saw, the theory, and hopefully in practice this noise gate would detect that and detect that this is not a normal signal coming off of a nuclear instrument. I mean, there is kind of statistical noise you see on the nuclear instruments but there is also things that force a different signal coming out.

And I probably don't have, given the

details here about how that all works. That's beyond my expertise. But the folks that are doing this are designing it to where it analyses the signal to detect that something is not right.

Paul, do you want to try to help me out on that one at all?

MR. BRAND: Sure, Tom. Paul Brand here. One of the things that happens when you get a nuclear signal there is just a normal proscenium statistics when everything is fine.

If there is noise above and beyond that it can do two things. First you can see that the statistics is not proscenium. But there is more to it. You can also do an entire Fourier analysis of that signal. And look for things that are not supposed to be there.

And you can put a trip level on that and say, hey, you know right there is information of noise that is not supposed to be there, give a warning to the operator and force them to run down. By procedure.

DR. SCHULTZ: Thank you. Another question, Tom. Have you gone into, as a result of this event, what if exercises to evaluate other types of events that could happen to make sure that the

systems instrumentation and the draining that you got ongoing part of a safety culture program, but to examine, so this event happened, what else could happen and what are we not well protected for?

MR. NEWTON: Yes. We've been thinking pretty hard about that for, well, the better part of the year, about extent of conditions. Not just unless the elements but whatever else. So yes, we're taking a pretty hard look at that.

And not only that we're, I didn't really mention this, but you're going to implement a lot more drills and things for our operators to respond to. Events that we didn't think we possible before.

DR. SCHULTZ: And that look is involving the organization?

In other words, in safety culture training it is really good to have everyone involved in these investigations in the what if evaluations.

MR. NEWTON: Agreed.

DR. SCHULTZ: Thank you.

MR. NEWTON: Yes.

MEMBER SUNSERI: Tom, I have one question and then we'll go to Walk next. So just to comment on the noise gate. I don't know how this system works, but just be cautious that any attenuation of the NI

signal doesn't affect its safety function.

MR. NEWTON: Yes, absolutely. It's going to be completely independent.

MEMBER SUNSERI: Okay. Walk?

VICE CHAIRMAN KIRCHNER: Yes, thank you, Matt. I was thinking the same thing. I was also, I presume, Tom, you have like a loose parts procedures or, when you do your refueling and everything else you've got procedures in place that, I'm just thinking of other things that like your, the event that you had, anything that would lead to a flow block that obviously would be the kind of thing that could result in the same consequences in terms of a fuel melt and such.

Though I would presume that there are programs in place, and you're looking at your reactor systems, your coolant systems to ensure that there is no possibility of loose parts and other blockage. Anything that could lead to a potential blockage, that would be of concern.

MR. NEWTON: Yes. I assume you're talking to me about FME, foreign material exclusion? We have, yes, we have a program for that whenever we're doing things on the reactor top.

And of course, the primary system is, for

the most part, a closed system. Unless we have some sort of gasket or something that gets loose.

And we do have a filter in the system that takes up any big debris before it can actually get to the core.

MEMBER SUNSERI: That FME becomes an important question. Especially when you decide to intentionally start sticking things into the reactor vessel. Like cameras and stuff.

MR. NEWTON: Yes. We have, matter of fact, I'll talk about the cleanup effort we have in a minute, but we had a big FME documentation program that we make sure that we're not getting things too close to the reactor. Yes.

Okay, Greg, your hand is up?

MEMBER HALNON: Yes, just a couple of questions. You mentioned extended condition. Did you guys look back at previous corrective action program items to see if there are any low events that could have been an indicator that this cultural issue, complacency, even equipment issues, may be something that manifested itself in the past in a low level event that you just didn't quite catch too because of the complacency issue?

MR. NEWTON: Well, I guess I could say

there are a couple of events that we had an unlatched element way back in the day. And again, we had this sort of apprenticeship program to where the folks that were in charge there were, it seems the folks that were the experts on this system and so things were not really put into place for the more junior folks. And that's what we're trying to fix now. So clearly it's an issue and we need to address it.

MEMBER HALNON: Okay. The second is on a concept called extent of cause. Have you looked at this root cause and the contributing causes and applied it across your other programmatic aspects of nuclear operations to see if there is anything else that you may need to dive into to ensure that the problems don't exist there?

MR. NEWTON: Yes. I mean, this is continually, we continually look at the extent of conditions of everything we have going on. And as I mentioned, it's not, we're not just focused on refueling we're focused on everything we do here to make sure we're capturing any complacency issues and things that we might identify later on as a problem.

MEMBER HALNON: Okay, thanks.

MEMBER SUNSERI: Okay, I see no questions so go ahead, Tom.

MR. NEWTON: All right. So again, you'll hear more about this in a little bit, but the NRC started their special inspection team on the 8th of February last year. And they've been pretty much present here daily.

At least we have daily stand up meetings and they're either physically or virtually present for that. And they're also here of course for special evolutions. And so they've been a continuous presence here.

In February through May we had several written reports, which you probably have all seen about exceeding the safety limit and the adequacies we found.

In July we have started weekly phone calls with the NRC management to help and exchange information back and forth between what they need for their programs and what we need.

October 1st we submitted a report of root causes, plant corrective actions. And we also submitted a request for permission to restart. Contingent on having our corrective actions done.

And since then we have been working with NRC with supplemental reports and furnishing information for their audit process. Which they'll

talk about.

And on December 23rd we submitted our license amendment request, which will codify and put in concrete that we're requiring not only rotation but also visual latch checks. And also the requirements you don't touch anything after the visual checks are done. That's going to be in the tech spec so it will be a requirement from here on out.

Any questions on that? You'll get more information for that from the NRC.

Just to finish up on the reactor status. Currently right now 27 of the 30 fuel elements have been removed from the core, including 1175, the damaged element. We left three in there, two of which we left in there to make sure that no debris fell down to below the lower grid plate. So we're going to be, probably in the next couple of weeks, removing the final three as we now have finished the vessel cleanup.

This was done late last month. There are some contractors here in the picture here that are using their tools to remove debris from the core. And so we were able to complete that and verify the vessel is clean. Which will then now start us to start the primary system cleanup.

And the way we're going to be doing that is taking 30 out, three filter elements. Instead of fuel they're going to be filters. And then we're going to put them in the core into position and start the primary pumps and see how that works in terms of getting all the primary system, all the fission product material and such in the primary system cleaned out.

MEMBER HALNON: Tom, this is Greg. This picture intrigues me. Are those lead aprons they have on?

MR. NEWTON: I think they're just containment issue aprons. I don't think they're lead. I think they're, but since you're moving tools up and down that have heavy water in them, you got to be really careful you don't get anything on your anti-seize.

MEMBER HALNON: Okay. I don't see any shielding under their feet. That was what I was curious about. Is there not a very high dose rate right there?

MR. NEWTON: Well one thing I want to point out here, there is heavy water above the reactor here. And since we're concerned about tritium exposure and degradation of heavy water, Paul Brand

had a great idea to put some balls in here, some plastic balls, that serve as a layer to prevent interaction between the two. And they work extremely well.

MEMBER HALNON: Okay.

MR. NEWTON: So I have to kudos to him for that idea.

MEMBER HALNON: Okay, thanks.

MR. NEWTON: And one thing we're doing in parallel is, the elements that were in the reactor at the time, the undamaged elements we need to evaluate for possible reuse. And the way we're going to do that is we're going to reverse the flow through the element and basically fill from the top to the bottom to flush out any material that might be in there. And then do a visual inspection and re-certification before we are able to reuse the elements.

And then my last slide, conclusion. February 3rd, as we know, was an unprecedented event in U.S. research reactor history. NIST is committed to get the reactor restarted when all necessary corrective actions are done and the NRC agrees with that and allows us to restate.

NIST public affairs folks have been real great in terms of communication all across the board.

External reviews found that the response on the day of the event was appropriate, so folks did what they were supposed to do.

And the last bullet I want to leave with is, frequent open communication with NRC we believe is the key to recovery and restart. So any other questions for us?

MEMBER SUNSERI: Ron has his hand up.

MR. NEWTON: Okay.

MEMBER BALLINGER: Yes. With respect to the visual inspection I guess are you assuming that you can look down the element and see any blockage that might be between elements, is that correct?

MR. NEWTON: Oh, for the reuse, yes.

MEMBER BALLINGER: Yes.

MR. NEWTON: They would actually, they've got a video system set up in our spent fuel pool where they can actually see all the way through the element, or the channel.

MEMBER BALLINGER: Okay. Yes, good. Thank you.

MEMBER SUNSERI: Members, any other questions?

(No audible response.)

MEMBER SUNSERI: Well that was an

excellent presentation. Thank you so much. And I think you see that we had great interest and then a lot of good questions and a lot of good answers, too. Thank you.

Okay. At this point, Joshua, I guess we transition over to the Staff.

MR. BORROMEO: Yes. And presenting for the Staff will be Patrick Boyle, who is the Project Manager for NIST.

MEMBER SUNSERI: Morning, Patrick.

MR. BOYLE: Good morning. Yes, I am going to start sharing my screen here. Okay. So as Joshua said I am Patrick Boyle and I am the Project Manager for the NIST Facility.

I am in the Non-Power Production and Utilization Facility Licensing Branch. My slides this morning are going to cover the NRC response to an event.

Once again it is going to be caveated by the fact that the NRC response is still ongoing and we don't have final statements for a number of the areas, but I will cover as much as we have at this point.

So key messages, focusing on the safety of the event. The NIST reactor is currently at safe shutdown condition. As mentioned earlier, it will not

restart until authorized by the Commission.

Also, as Tom mentioned, most of the fuel has been removed from the reactor. Three elements remain in place. During the event the offsite dose to the public was near background levels. The radiation dose to the workers during the event was also well below regulatory limits.

The NRC did an independent evaluation of the consequence event and reached the same conclusions and the NRC is currently reviewing the license request to restart the reactor. In addition, inspection and follow-up activities are continuing.

So initial reaction to the NRC response event, a special inspection team was assembled and dispatched to the site. Shortly thereafter a technical review team was assembled, and I will go into more details of the functions of each one of these teams in the following slides.

The results from the technical review will inform the restart decision. So the current status, the special inspection team has completed its inspection activities. They are finalizing the report, which is going through the concurrence process.

The technical team has looked at the

corrective actions, cleanup activities, and is currently working to obtain additional information as to inform the restart review decision and then additional inspection activities will continue, including onsite inspections prior to and following any authorized restart.

So the event itself, NIST reported to the NRC partial melting of one element. The safety limit in the technical specifications at NIST indicates the fuel cladding temperature not exceed 842 degrees and since the melting occurred that fuel temperature was clearly exceeded.

The NIST reported very limited radiological release during the event. The NRC compared the event to the radiological dose consequence to the accident analysis in a safety analysis report and specifically we looked at the maximum hypothetical accident.

So I'll take a minute and explain what that is for research reactors, because this is not something that you would experience in the power reactor environment.

So NUREG-1537, Part 2, which provides the Standard Review Plan and acceptance criteria for licensing non-power reactors, within that we have

Chapter 13 which discusses the different accident scenarios included with the maximum hypothetical accident.

That is done as a bonding worst case scenario. And so you look at what can possibly go wrong. You don't necessarily find any credible initiating event so that's why we call it maximum hypothetical accident.

So for NIST the maximum hypothetical accident within their safety analysis report is complete blockage of flow to one fuel element by unspecified means and then certain assumptions are made related to what the potential dose consequence could be, including that all the noble gas fission products are assumed to be released in primary coolant and quickly go into that helium space that we talked about earlier.

So that's that cover gas but then that transmits into the exhaust system and then the exhaust system itself will isolate, which Tom had mentioned earlier.

Looking at that performing analysis for the license of the facility, the maximum expected dose to the public with all the limiting assumptions in place would be 6.4 millirem.

So what actually happened? There was flow blocked to one element. There was at least some partial melting of the fuel as evidenced by the visual inspections that Tom showed earlier.

Also identified in the fission product stack monitor was noble gases, specifically the presence of krypton, and there was also the dose calculation performed by NIST and confirmed by the NRC Staff that they were well below the potential release limits for the maximum hypothetical accident.

So the maximum hypothetical accident in the license and the safety analysis report bounds the actual event that occurred. So we also --

(Simultaneous speaking.)

MEMBER SUNSERI: Patrick, we have a comment or a question from Ron Ballinger.

MR. BOYLE: Okay. Sorry. Yes, I'm sorry I can't see --

(Simultaneous speaking.)

MEMBER BALLINGER: Yes, sorry.

MEMBER SUNSERI: Yes, no, that's okay. I am the air traffic controller for this so I'll keep you on.

MR. BOYLE: Thank you. Okay.

MEMBER BALLINGER: It appears to me that

you now have a benchmark where you can compare the dose rate from the actual maximum hypothetical accident to what actually happened.

Have you thought about doing that scaling to see what the dose would actually be for a complete melting to see how close you would have been to the artificial limit?

MR. BOYLE: Yes, that's a good question, and there are a number of aspects to consider for that while looking at theoretical versus an actual measurement.

First of all, we don't know how much of the fuel actually melted. That may not be determined for a number of years because we have to find a way to transport and then basically do some type of PIE on that to determine how much actually melted and then we could ratio from there.

The other assumptions, and the reason why the dose consequence is actually much lower than the theoretical is we take all the limiting conditions, we assume full power operation for extended time, we assume a maximum burned element, we assumed the highest power location.

So all of those factors do create a bounding condition versus an actual and if we were

trying to make this an accident that is, you would have an initiating event and make it a maximum credible accident then we would be trying to do some kind of closer alignment to the actual consequence from this event versus what is analyzed.

But the fact that it's a hypothetical accident there is a lot of margin and the intention is to maintain that because that's kind of the licensing philosophy for further research reactors.

MEMBER BALLINGER: Yes, it just seems like you've dodged a bullet and you've got a data point which you don't often get.

MR. BOYLE: That's correct, yes. Really, personally, I'd rather not have this data point.

MEMBER BALLINGER: Some days chickens, some days feathers.

MR. BOYLE: Yes, there we go.

MEMBER SUNSERI: Okay. We have Walt has a question. Go ahead, Walt.

VICE CHAIRMAN KIRCHNER: Yes. Patrick, as a result of this, obviously, the offsite dose was kept quite low because the ventilation system isolated it.

Have you looked at that system and to what extent is that as in a power reactor system and accident sequences where you make an assumption of a

single failure, what if that ventilation system didn't isolate, what would the dose have been offsite?

MR. BOYLE: Yes. And that's -- You're right. That's one of the other assumptions within the safety analysis for the facility.

We only take credit for the systems that are required to be operational at the facility. So once again you have the items you put in place to reduce the release during the event, but you only take credit for the items that you require in technical specification.

So the intention is to really build a lot of margin into the non-credited systems so that you are not challenging your release limits.

MEMBER SUNSERI: Okay. You okay, Walt?

VICE CHAIRMAN KIRCHNER: Yes. Thank you. I will think further about that aspect of the system, you know.

MR. BOYLE: Yes. Right. Right. Right, and that's part of the non-power licensing approach.

MEMBER SUNSERI: All right, I don't see other hands. Go ahead.

MR. BOYLE: Are we good with questions here? I'm sorry, I'm going to have to keep pausing.

MEMBER SUNSERI: Yes.

MR. BOYLE: When you present you don't really see the rest of the Teams stuff, so --

MEMBER SUNSERI: Yes, yes. No, no, that's fine. Just when you go from slide to slide just briefly pause between slides and that will help.

MR. BOYLE: Okay. No problem. So it was mentioned earlier NIST cannot restart until authorized by the Commission.

So these are the regulations that are in place that relate to that. So we have 10 CFR 50.36 which identifies the technical specifications and the requirement to have a safety limit, and then within 50.36 if the safety limit is exceeded the reactor must be shut down, licensee shall notify the Commission, review the event, including the causing condition, root cause, you know, extent of corrective actions, take the precluding recurrence, and then operation must not resume until authorized by the Commission. So that is right in the regulations.

So to review, the request that came in by NIST, actually even before that, we put a team in place to look at the event in great detail and then this team has continued to work with looking at the event itself, the cleanup evolution, the corrective actions, and proposed restart activities.

And we have pulled from a number of divisions, including the non-power division, the safety system. These are all within the Office of Nuclear Reactor Regulation.

The additional review in the areas we were kind of primarily focused on is like the reactor vessel internals. We are taking a good look at what that cleanup means.

We are looking at, you know, things potentially involved with, you know, what happens when the hot aluminum hit the lower grid and is there any other potential damages, so things of that nature.

We are looking at the potential impacts to the coolant system. We are looking at, you know, what about the fuel that was in the reactor that is going to be re-used.

So we are looking at NIST has to evaluate this, provide their review and their acceptance of the results, and then the NRC Staff will review that. Questions?

MEMBER SUNSERI: Yes. Jose March-Leuba has a question.

MR. BOYLE: Okay, go ahead.

MEMBER MARCH-LEUBA: Thank you. Yes, I agree that it's really good that, one, the public was

never at risk, I mean the dose outside, the boundary was really low, but the control room had to be evacuated.

Is there anything in the regulations or anything that you can see there to improve the ventilation of the control room? Because I mean all of the reactors we have seen are designed to have input for the ventilation system from the outside and they have two, one in the north and one in the south, and they pick the one that is cleaner. So can you talk about that?

MR. BOYLE: Yes, I can actually talk about that, just about non-power reactors in general. It is very common for the control room to be in a common environment with the reactor itself.

I can speak specifically, I worked at the Penn State Research Reactor for a number of years as a senior operator there and the entry to the control room was through the reactor bay.

So if you got a high radiation alarm and you needed to exit the facility you did have a short pathway through that and you would have access to a remote readout looking at the radiation and nuclear instrumentations at a remote panel.

But that's a common design for the

research reactors and the potential exposure to the operator is included in the safety analysis and you have to demonstrate that you make assumptions related to the amount of time it takes to exit the facility and what the personnel exposure looks like.

So I agree if you are used a power plant where you have an isolated control room with habitability requirements. Those do not exist for research reactors and the reason is the very low source term and the ability to properly exit without consequence to the safety and recovery of the event.

MEMBER SUNSERI: And Greg has his hand up.

MR. BOYLE: Okay, go on.

MEMBER HALNON: Yes.

MEMBER SUNSERI: One more question. Greg.

MEMBER HALNON: Yes, a couple. I wanted to talk a little bit about, and I think it might be more appropriate down the road here, but I'll ask this question first.

You know, the corresponding, if you had a corresponding event in the commercial reactor world we would be in a huge, huge programmatic aspect to get that solved throughout the industry, to take a look at it. IMPO would be going crazy with their industry documents and inspections or assessments and whatnot.

And I understand that this has got a very low consequence to the public and relatively straightforward, but does the NRC feel that the industry response, the research reactor industry, is taking this serious enough to look at their own programs throughout the country to make sure that they don't have the same types of problems going on?

MR. BOYLE: I think the bigger picture related to the cultures that can develop at a small facility and the problems associated with turnover of facilities who have, you know, not a large number of personnel and they are there for a long period of time and then they transition away and you have new people coming in that don't necessarily have that depth of experience.

So that is definitely a good area for the remaining of the research reactor community to focus upon. I do believe we do have some information we are going to share with that coming out of this event, but just in general looking at trend within the other research reactors and looking at the challenges to maintaining staff.

I mean I know this discussion is primarily focused on NIST, but we do have a couple other facilities that are going through personnel changes

where they actually don't have any current license reactor operators and they have their cold license.

And if the facility has been in place for 30 years but they had a transition of the two or three people that were responsible for operating the reactor and ended up getting in a situation where they don't have anybody currently licensed for that facility it is -- So that is a unique aspect to the community and that is definitely an area of focus going forward.

MEMBER HALNON: Okay. Have you guys put any generic communications out on this at all?

MR. BOYLE: Not at this point.

MEMBER HALNON: All right. Do you have any plans to?

MR. BOYLE: Josh? Lifeline.

MR. BORROMEO: This is Josh Borromeo, Chief of the NPUF Licensing Branch. So taking a look at a generic communication is something that we have built into our project, our restart action plan project plan, right.

But at this time we are still completing our SIT inspection and out of that, right, I think the community, the research test reactor community, is going to become more aware of the issues that happened at NIST, right, but we haven't yet released that

report.

It's coming soon, but we haven't released that publicly yet. So a short answer is we are still evaluating whether or not a generic communication is appropriate for this type of event.

MEMBER HALNON: Okay. Thanks, Josh.

MEMBER SUNSERI: We have a couple of questions that have prompted up. We will go with Charles Brown first.

MR. BOYLE: Okay.

MEMBER BROWN: I went back and looked at the backup slide from NIST, the number, I think it was the last slide on the operator experience.

MR. BOYLE: Yes, I have seen that.

MEMBER BROWN: It looks to me like there was a lot of clues five years ago of significance, you had a significant start of reduction of experienced SROs and fairly less than half have maybe experience as of the last, when this occurred.

I mean there was a significant falloff. If you look at the other graph on the left-hand side -- I don't know whether you can put that one back up or not so that the other --

MR. BOYLE: Yes. If I stop sharing I can let Tom put that one up. So we can go ahead and do

that.

MEMBER BROWN: Their 32nd slide, Number 32.

MR. NEWTON: I'm on it. I'll get it right in a minute.

MR. BOYLE: Okay. Thanks, Tom.

MR. NEWTON: Okay. Oh, of course, it went to the wrong spot. Oh, crap. All right, I'll try this again. Okay. Do you see -- Maybe I forgot to share it. Can you see that or not?

MEMBER BROWN: No, not yet.

MR. NEWTON: Okay. Let me try this again.

MEMBER SUNSERI: I think Patrick may have to un-share his screen to allow you to share.

MEMBER BROWN: Oh, there it is.

MR. BOYLE: Yes, I think I already did.

MR. NEWTON: Yes. You got it now?

MEMBER BROWN: I don't know. Maybe, you know, I am not Greg, I am not Matt, I don't have their commercial experience, but just looking at the trend in the right-hand slide and then you compare that also with the data that you have, does NRC ever look at or evaluate periodically how these plants and test reactors are being staffed?

That's terrible when you look at what

happened on the 4th, that the level of experience, supervisor's experience, number of -- I mean it seems to me that there was a precursor somewhere along here and that indicates something and it's before COVID even had started.

MR. NEWTON: Well that's not true, but --

MEMBER BROWN: Well that's what it looks like. Tell me why it's not true.

MR. NEWTON: Well, I mean COVID started actually in Fiscal '20, but the point here and on the 4th of February, this is the crew that actually did the last checks. This isn't the entire crew, so it's a little bit misleading here.

But, yes, we clearly had a drop off of experience starting about 2018/2019 that we didn't -- We had a lot of people that retired so the experience level went quite a bit down.

MEMBER BROWN: You all actively recruit Navy experience people? I kind of gathered that if you look over from FY, for Fiscal Year '09 through about '15 and then you started looking, seeing a gradual decreasing of people that actually ran real power reactors.

MR. NEWTON: Yes, we do active recruitment of Navy folks. Unfortunately, they can earn more

money elsewhere and so that's a big factor. We struggle to get qualified folks.

(Simultaneous speaking.)

MEMBER SUNSERI: I think, Charlie, your point here is is that, you know, this is the part of the management complacency, right, looking at all this stuff and making sure that you take mitigation actions in shrinking your safety culture and procedures and to -- There is all kinds of tools that offset various experience levels, but this was like the perfect storm, everything converged together on these guys, so --

MEMBER BROWN: Yes.

DR. BLEY: Yes, this is Dennis. You know, Charlie, well you guys didn't tell us, but the number of people who are part of the operating crew for small research reactors is pretty small and they tend to stay there a very long time. I think that's what you see here, they drop off.

But even in an organization as big as the nuclear Navy was, I remember back in the '70s the Navy prevented, which the research folks can't do, prevented a significant number of senior lieutenant commanders from leaving their program in the Navy for several years because the same thing kind of was going

to happen there.

But when you have a very small number of people and they all kind of started at the same time and stayed around this sort of thing can happen. I'm not sure it's complacency. I think it's probably just aging of the crews probably, and supervisors.

MEMBER SUNSERI: Yes. I mean the -- My point was that the attrition is not due to complacency, but the response to the attrition could be. That's all I was suggesting.

MEMBER BROWN: Can I make one observation, Matt, and I'll be quiet?

MEMBER SUNSERI: Yes.

MEMBER BROWN: I got in the naval nuclear program in 1965 and back in those days we had fewer plants operationally and the headquarters actually conducted crew examinations periodically.

And in that timeframe as the plants increased we had to change that, that's why we implemented, I have forgotten what they are called now, but it's a Navy-run examination crew that comes through periodically and examines all the crews, because we just couldn't handle it from headquarters.

The only time we were able to do it after that was before an initial startup after a refueling.

So the operator attention and people checking their status and qualifications and their knowledge is a pretty important item to me.

So, Dennis, I don't know whether that -- You were on the Enterprise, what, in the '70s?

DR. BLEY: I went in in '69 and I was there in the early '70s.

MEMBER BROWN: Do you remember when the Propulsion Plan Examining Board started?

DR. BLEY: No, that was after me. We still had you guys coming out.

MEMBER BROWN: Yes, that's -- Exactly. And we recognized that. I am just wondering if NRC -- I don't know how many test reactors are out there. I am just -- Operator experience is very important.

We recognized it at -- Rickover went non-linear when we had to start giving that up somewhat. I won't -- When I say "non-linear," he was very attentive, let's put it that way. I got that from personal experience, but much later.

So, anyway, it's just a clue. That's all I am looking -- I am just trying to give NRC an idea that maybe there is something else that people need to look at for these plants to see if there is a trend that we may be able to try to catch some of this stuff

in advance, that's all, from a training qualification complacency.

It's just another factor when you look at something like this happening on those two graphs relative to experience and the number, put aside the 1-4 thing, but the numbers back in FY '20 and '21.

That's a pretty significant degradation of experience. So, anyway, I'll stop now. It's just something to think about.

MEMBER SUNSERI: Ron, you have a question?

MEMBER BALLINGER: Yes. Charlie will probably remember what happened when the Admiral instituted what he called verbatim compliance, but that's another story.

My comment is that has this incident been discussed at the other facilities? Because a plant like HFIR, if they lose cooling for even a second they are in big trouble with their fuel.

It seemed to me like this fuel got into trouble in a pretty short period of time. Like Walt was concerned about flow restrictions and things like that are probably doubly or triply important for something like HFIR.

MEMBER SUNSERI: Is that a question or just a comment?

MEMBER BALLINGER: Well, I guess it's just a comment.

MEMBER SUNSERI: Okay.

DR. BLEY: We did some work with HFIR, Ron. I don't know if you know it, but the designers expected a core melt every three or four years so they designed for that.

MEMBER BALLINGER: That's what I understand.

MEMBER SUNSERI: Okay.

MR. BORROMEO: So this is Josh Borromeo again. Maybe Tom can correct me if I am wrong, but we did present this event, or at least some aspects of it, at the Research and Test Reactor Annual Conference back in October of this year.

I believe there was an ANS conference as well where we discussed this. Actually, next week at the RIC we have another presentation on the NIST event where NIST will be presenting as well as the NRC Staff.

So there are upcoming engagements where we are going to be discussing this event. Also, once we release the SIT report we will have a public meeting regarding that.

So there is going to be opportunities to

socialize this external to the Agency that the RTR community can participate in.

MEMBER BROWN: Is the Agency going to do -- This is Charlie again. I guess in my old job years and years ago if we had had like Ron talked about the one plant, do you anticipate now going back to all the other research reactors that are run by all the universities and checking to see, doing kind of a retrench or are just only focused on this and everybody else keeps on operating?

MR. BORROMEO: Yes, so I think this kind of gets back to the other question before, right. So right now we are focused on NIST, right, what happened, understanding the root causes, understanding the corrective actions.

But as part of our plan we are going to take a look and see if there is any sort of generic implications that need to be shared with the community to ensure, right, that any sort of similarities between the event, you know, between the facilities, are repeated at other reactors.

MR. BOYLE: Yes. And this is Patrick again. I do want to focus on two aspects of this potential impact for other non-power facilities.

You did mention the DOE facilities, which

the NRC doesn't license, but we do share information with them related to safety and operation of the facilities.

The other thing to bear in mind is this is the highest power research reactor currently operating, well, I'm sorry, test reactor technically, the highest power non-power facility operating in the United States at this time.

The bulk of the other facilities don't even have coolant pumps, they run on natural circulation. We have about, I can't remember off the top of my head, I think four that use force flow and only RMIT, NIST are the high power reactors, meaning greater than one megawatt.

Most facilities are one megawatt or less and they run on natural convection and cooling can occur in air with the fuel at equilibrium conditions. So that is -- It does create some perspective for the other facilities, but also recognize the questions being asked are related to management and that applies to all facilities. Greg, I see you have a question.

MEMBER HALNON: Yes. Since we're just kind of freewheeling it here, I'm not sure exactly where this was going to fit, but from an NRC routine inspection perspective what in the inspection program

allowed this facility to establish a culture of complacency, inadequate safety culture, inadequate training, inadequate procedures.

Did you look back at your own inspection program to see how this -- And I go back to earlier Ron mentioned Davis-Besse and since I worked there after the accident there I was very intimately involved with the management aspect of the root cause and whatnot and the NRC also did a root cause looking at their own programs to figure out what they missed. Did you do that here as well?

MR. BOYLE: I'm going to ask Travis to speak to that. He is the Branch Chief for the Oversight Branch of non-power facilities.

MR. TATE: Yes. So this is, as Patrick said, this is Travis Tate. I am the Branch Chief that has the inspections for the RTR facilities.

To answer your question, we are focused currently on NIST but we are taking a look and plan to take a look at our programs and, you know, after the end and after we get through the NIST evaluation.

We want to make sure that we have a holistic look at everything before we engage in that. I say that, but we are, you know, starting to collect things that we need to look at as part of our program

to evaluate if there are any changes that we need to make.

MEMBER HALNON: Okay. Do you even -- Travis, do you -- And I appreciate that. I think that's the right thing to do. It's been a year since the event. Have you guys looked back to see what you missed?

I mean these are pretty significant cultural management issues that just didn't happen overnight. Did you look back at your previous inspection results from a routine inspection perspective and see if there was something that was indicating it that you missed or that maybe the program was clearly inadequate to inspect or anything around those types of questions?

MR. TATE: Yes, you're right on, and that's what I was kind of alluding to in my response is one of the things that I have asked the Staff to do is to pull, look at prior inspections to see if there was anything there.

MEMBER HALNON: Okay. So that introspective look is still to be done then?

MR. TATE: That's correct.

MEMBER HALNON: Okay.

MEMBER SUNSERI: Please continue, Patrick.

Thank you.

MR. BOYLE: Okay. I'm going to show our slides again here. Okay. So I was up to the identifying of the different, just the breadth of the restart review team looking at aspects associated with the restart request, the corrective actions.

So at this point, you know, as Tom indicated earlier back in back in October NIST submitted a restart request to the NRC but they had a big IOU with that.

So it's actually very helpful in the fact that the NRC Staff is able to see what NIST plans to inspect and confirm and evaluate and it provides us, meaning the NRC Staff, the time to look at those results in real time and determine if there will be enough information to help us support a restart decision.

So if there are any areas where we need additional information we have an audit process that is open, it allows us to ask questions, and then the NIST can share detailed responses to us and when we determine information that is necessary for the restart decision we will ask NIST to place that specifically on the docket so it's publicly available to everyone to understand what the NRC Staff reviewed

and how that information was used to make the restart decision.

So the next steps, we are continuing with looking at the inspection results that NIST is performing, all of the fuel and components and the analyses and looking at the results that NIST is receiving and seeing if it is consistent with our understanding of the materials involved.

And, also, the oversight process is continuing, so we are wrapping up the SIT currently, but we are going to continue with additional inspections and have follow-up inspections and potentially a restart inspection team.

So in summary, NIST and event recovery still proceeding with the cleanup activities, inspection activities are planned, and they are inspecting the materials that they have.

NRC approval is required for restart. Once again, as we discussed several times, the actual event release was a small fraction of regulatory limits and well within the safety analysis performed for the facility.

The NRC will continue its inspection activities prior to and following the restart, and, once again, the authorization to restart will not

occur until the NRC has determined that it will remain protective of the public health and safety, basically the reactor is restored to its design basis.

So that's my formal presentation. You've been pretty good about questions so far. Anymore at this point?

MEMBER REMPE: This is Joy. I apologize because I got distracted with another activity on ACRS, but I noticed in your presentation that you said, hey, there is visual evidence of what is molten material and I recall hearing during this presentation from either your or NIST about the fuel assemblies being reviewed.

Is there a document somewhere that shows some of the images that have been obtained of the assemblies that were damaged that way we can get some more idea of how the melt progression went?

MR. BOYLE: I'm trying to think how much of that has been released to date. We are still putting together the special inspection report and I think that might be a place where some of that could be included.

Also, we are developing the technical evaluation reports supporting the restart decision and if a visual item is useful for conveying the

information we would probably include it in that location.

But I don't know if there is any plan at this point to release the image it captures so far. So does anybody else on the team know that?

MEMBER REMPE: Or even from the NIST folks. Again, I just am wondering if some of that information could be sent to Kent Howard because of my personal interest and your inspection report, too, that includes any of these images I would like a copy.

MR. NEWTON: We can certainly share them. We have not put them on the docket from NRC. There may be some images from the ANS meeting or something, but we could certainly share them with the ACRS folks.

MEMBER REMPE: I would appreciate it. And just send it to Kent and he will forward it to us. Thank you.

MEMBER SUNSERI: All right. We have Stephen Schultz then Greg then Walt, in that order.

DR. SCHULTZ: Patrick, I didn't quite catch, have you established the restart inspection team? It seems like continuity would be important to have a team available that has been following, the whole team who has been following this carefully.

You definitely have a large organizational

setup to examine this in not much detail but in terms of the evaluation of corrective actions and the evaluation of what needs to be done before and during and after restart would be important to have a dedicated team associated with that.

(Simultaneous speaking.)

MR. BOYLE: Yes, I'll let Travis speak to that.

MR. TATE: Yes, this is Travis. You are absolutely correct. We are working at this moment trying to, looking at the corrective actions, looking at our inspection findings, and the various other sources of information to identify, you know, what are the corrective actions that we need to look at to inform the restart decision as well as any ongoing inspections that we maybe, you know, need to look at, you know, even after, you know, if we were to authorize restart, you know, what we would we need to look at from an inspection standpoint going forward.

Because I think you guys have kind of honed in on some of the issues that was raised by NIST are some issues that are long-term kind of fixes that need to be done with the management and the operations of the facility, and so we are putting that together now. We are putting together a team.

Our special inspection lead for NIST is the assigned NIST regular inspector of the facility so he will provide a lot of continuity between the special inspection and any future inspections.

DR. SCHULTZ: Thank you, Travis. I appreciate that evaluation. Also, I just wanted to comment I am pleased to see that this is going to be presented by both organizations at the Regulatory Information Conference.

I think that's an ideal way to communicate with industry on this issue/event and its recovery. Thank you.

MR. TATE: Yes. And I would add to that, as was mentioned, we also participated in an ANS conference where NIST spoke and I did a presentation on our activities as well.

That panel also included the DOE folks that were involved with the HFIR facility event that happened. So it was a good panel to share information for events like this.

DR. SCHULTZ: Very good. Thank you.

MEMBER SUNSERI: Okay. We'll go to Greg next.

MEMBER HALNON: Yes. This is sort of a tossup. First, Tom, if you would address it and then

maybe the NRC folks, either Joshua or Patrick.

How was the reaction from the public? Now understanding that it was somewhat squashed because of the pandemic, but what kind of feedback did you get from the public from the initiation of the alert through the next couple months after that?

MR. NEWTON: Well the NIST public affairs folks kind of handled all that. We had a town hall meeting I think a couple of weeks later, which was well attended by, at least for the neighbors, that the NIST director spoke at and an NRC representative was there as well to talk about the event.

So we have had a pretty good relationship with the public and we have been doing everything we can to put things out there for public dissemination.

MEMBER HALNON: Did you get a lot of reaction? I mean was there a concern of dose rates and issues, maybe things that didn't get communicated real well previous, prior to the event or anything like that?

MR. NEWTON: We had some early inquiries and stuff, which we answered kind of, you know, if we'd get an email or something we would answer through the Public Affairs Office, so there was some concern but it wasn't anything we couldn't handle.

MEMBER HALNON: Okay.

MR. NEWTON: Rob, was there anything else you would like to discuss on that?

MR. DIMEO: Obviously when this happened there was a NIST announcement that went public describing the event as all the facts were known on the day of it, on February 3rd, and that was followed up by subsequent public announcements.

There was quite a bit of public interest, especially by the surrounding communities. As Tom mentioned, we scheduled a town hall with the public. I think it was the following week.

The NIST acting director was present, myself, and the radiation safety officer from NIST was present as well, along with representatives from the NRC.

There were a lot of questions that came in and I believe we were able to effectively answer them. It was a huge help to have the NRC there from the regulatory perspective to provide their feedback as well.

And we have been tracking the public interest from the perspective of inquiries that have come in to NIST over time and when there has been a release, for example when we had notified the NRC of

exceeding the safety limit on the fuel element, when the interim NRC report was released, and other subsequent public announcements, when we made those there was renewed interest but not nearly the same that there was on the first, at the initial incident time. It has gradually -- It has subsided over time.

There don't seem to be any remaining questions other than there remains a public interest once we would get that authorization to restart the reactor to hold another public meeting with them, likely with the senior NIST leadership as well, to have a conversation with the public to address any concerns that they might have.

MEMBER HALNON: Good. Appreciate that. Anything from the NRC side that you guys have received from the public or otherwise relative to the public response?

MR. TATE: Yes, this is Travis.

(Simultaneous speaking.)

MR. TATE: Oh, Josh. Yes, I would say that what Rob said has been consistent with what we saw, a lot of initial public interest immediately after the event and a lot of communications.

We work closely with our Office of Public Affairs and, you know, issued, there were social media

tweets and things like that that we issued working with Public Affairs and Congressional Affairs.

There was a lot of interest, you know, throughout this past year. We have had a few briefings of congressional staff members as well. But, yes, there was a lot of initial -- And, you know, considering where NIST is located, as you can imagine, there was a lot of interest inside the NRC from employees as well.

MEMBER HALNON: Yes, I can imagine. Local government, did you get any interaction or any inquiries from the local government? Did they exercise their emergency plan annex for radiological emergencies or do you know of any details there?

MR. TATE: So most of that coordination with the local governments is done through our Region I office and I don't think, I'm not sure if anyone is on the call from our Region I.

The State Liaison Office in Region I does that coordination. I know that they were in contact with the State, but I am not aware if the State exercised in anything other than awareness of what was going on with the event.

MEMBER HALNON: Okay. I would appreciate any feedback that you might get, if you could check

with the Region I office.

I am interested if any portions of either the local or State plans were implemented in their radiological annex of their all hazards plans.

MR. TATE: Will do.

MEMBER HALNON: Thank you.

MEMBER SUNSERI: So we'll just ask Kent Howard, our BFO, to follow up with you on that, okay.

MR. TATE: Okay, great. Thanks.

MEMBER SUNSERI: And, Walt Kirchner.

VICE CHAIRMAN KIRCHNER: Yes. I have one question and then two observations if I might, Matt. The first, the question is given that the confinement system functioned and prevented a more serious event in terms of consequence and release, have you looked at, are there any design improvements in terms of resiliency, redundancy, or safety-related functions for the confinement system and the vent, such as hardening the vent or redundant measures to ensure the functionality of that in an event like this?

Is there anything along those lines in terms of design changes envisioned for the confinement system?

MR. NEWTON: Well not at this time. As I mentioned, as had been mentioned, everything

functioned like it was supposed to. We do have some redundancy built in to the confinement system and it all functioned quite well.

So we're not looking at any changes right now because we haven't identified any weaknesses.

VICE CHAIRMAN KIRCHNER: I am not familiar with the balance of plant and the layout and such. Does that confinement system have redundancy in the isolation valves?

MR. NEWTON: Randy, do you want to help me out here?

MR. STRADER: There is not a redundancy in the valves themselves, but there is, we test the confinement system, the leakage rate, so if anything were to fail we would understand what the system can handle, and so we test that annually and we also test all the --

MR. NEWTON: It looks like we lost you, Randy.

VICE CHAIRMAN KIRCHNER: Yes.

MR. NEWTON: I'm not sure what happened. He must have dropped off.

VICE CHAIRMAN KIRCHNER: Well, my concern is just --

MR. STRADER: Yes, I'm sorry. Yes, I'm

sorry, I dropped off. We also test all the valves and the motors that operate the fans.

So we have both DC and AC motors that operate each fan, and there is two fans, quarterly to ensure that they operate as intended.

VICE CHAIRMAN KIRCHNER: I am just thinking because you have an open-vented primary system is there -- Well, maybe this is too much detail, but it just seems to me you have only one line of defense, and so is that equipment designed like safety-related equipment for a power reactor?

MR. STRADER: I can't speak for a power reactor, but it's been analyzed through our safety analysis to be able to handle at RMHA.

VICE CHAIRMAN KIRCHNER: Okay. Okay, thank you. Matt, may I make two observations?

MEMBER SUNSERI: Yes, sir, go ahead.

VICE CHAIRMAN KIRCHNER: Well the first one is relevant to the Committee's deliberations during this meeting on another topic it seems to me that the approach that the NIST people took in defining their NHA is a good example that might be used by small reactors going forward in the licensing arena. Now I am talking about power reactors.

Then the other cautionary observation I

would make is we continue to hear that smaller reactors, the expectation is that somehow smaller reactors are safer and because the source term is smaller the consequences are less in the case of an accident.

That may be true, but it may not, and I just throw out that cautionary note that there is something also called frequency. So when you look at risk it's not just the source term, but the potential probability for an accident and advanced designs that haven't been proven.

And there are good examples of this, Fermi was one, it was a much smaller reactor, it wasn't necessarily more beautiful. So I am just a little concerned going forward when we look at small and advanced modular reactors that we just don't go in with the presumption that they are safer until demonstrated. That's just a personal note.

MEMBER SUNSERI: Yes. No, that's a good point, Walt, and that is exactly why I think we wanted to have this presentation so that we could glean any of those insights for our future work. We will go to Dave Petti next.

MEMBER PETTI: Yes. I just wanted to follow on from what Walt said. I looked at it from a

perspective of reactor training and our recent discussions and vis-a-vis a Part 53 licensed versus certified operators.

I think this is also a cautionary tale and I think supports our position in the letter we took, so --

MEMBER SUNSERI: Yes. No, very good without a doubt. Any other Members?

(No audible response.)

MEMBER SUNSERI: All right. Well those were great comments, great questions. So now we will open up the line for the public comments. If you are a member of the public listening in on the phone line you can unmute yourself using star six.

If you are a member of the public on the Teams just open your, unmute yourself and make your comment, state your name and make your comment. So the line is now open.

(No audible response.)

MEMBER SUNSERI: Okay. I am not hearing anything. We will close off those comments. Any other members or anyone in the Staff or NIST would like to make any comment before we close up?

(No audible response.)

MEMBER SUNSERI: All right. Well then I

will close this up. I really want to thank Patrick and Thomas and all of the folks on your teams that supported the presentations today.

They were excellent and informed us. I think I would say it met or maybe even exceeded my expectations on the level of detail and the comments here.

As Walt and Dave were saying, I think some of the important insights, at least I heard from the drawing out of this, is not necessarily around the technology because safety culture tends to be, I'll use a buzz word here, technology-inclusive, right, you know, safety culture crosses all venues.

I think we saw here clearly what could happen when complacency at either levels of management or workforce sets in, the importance of procedure use and adherence, the importance of training, being mindful of the level of experience of your staff and making sure that they procedures and training is sufficient to support the level of experience that you have, which is a management activity, and last but not least I will say respect for all things that could affect the integrity of nuclear feel, like the latching procedures, et cetera.

So I think those are all important

concepts that we could think about as we look forward to our future work. And as Walt was saying, it really doesn't matter what size the reactors are, these things all apply and you can have undesirable consequences if you don't take care of the safety culture.

So with that, Chair Rempe, I will turn the presentation back to you.

MEMBER REMPE: Thanks, Matt, and thanks to -- I would also like to thank on behalf of the Committee for the presentations we received from the staff at NIST as well as the NRC Staff.

At this time -- Oh, I also want to thank you, Matt, for your leadership in getting this arranged for us. At this time I would like to ask the court reporter to note that we are going to go off the record and then I would like to discuss with the Committee what they want to do for the next 45 minutes.

(Whereupon, the above-entitled matter went off the record at 10:43 a.m.)

NIST Center for Neutron Research

February 3, 2021, Fuel Failure Event at the NIST Center for Neutron Research (NCNR)

Rob Dimeo, Director

Tom Newton, Deputy Director/Chief of Reactor Operations and Engineering

Paul Brand, Chief of Reactor Engineering

Randy Strader, Chief of Reactor Operations

Steve Dewey, Chief of Health Physics

Andrew Gahan, Chief of Aging Reactor Management

NIST

NCNR

- One of Three Major Neutron Science Centers in the US
- Supports > 3000 research participants annually
- Neutrons supplied by 20 MW reactor, the NBSR
- Reactor operates on a 38 day fuel cycle

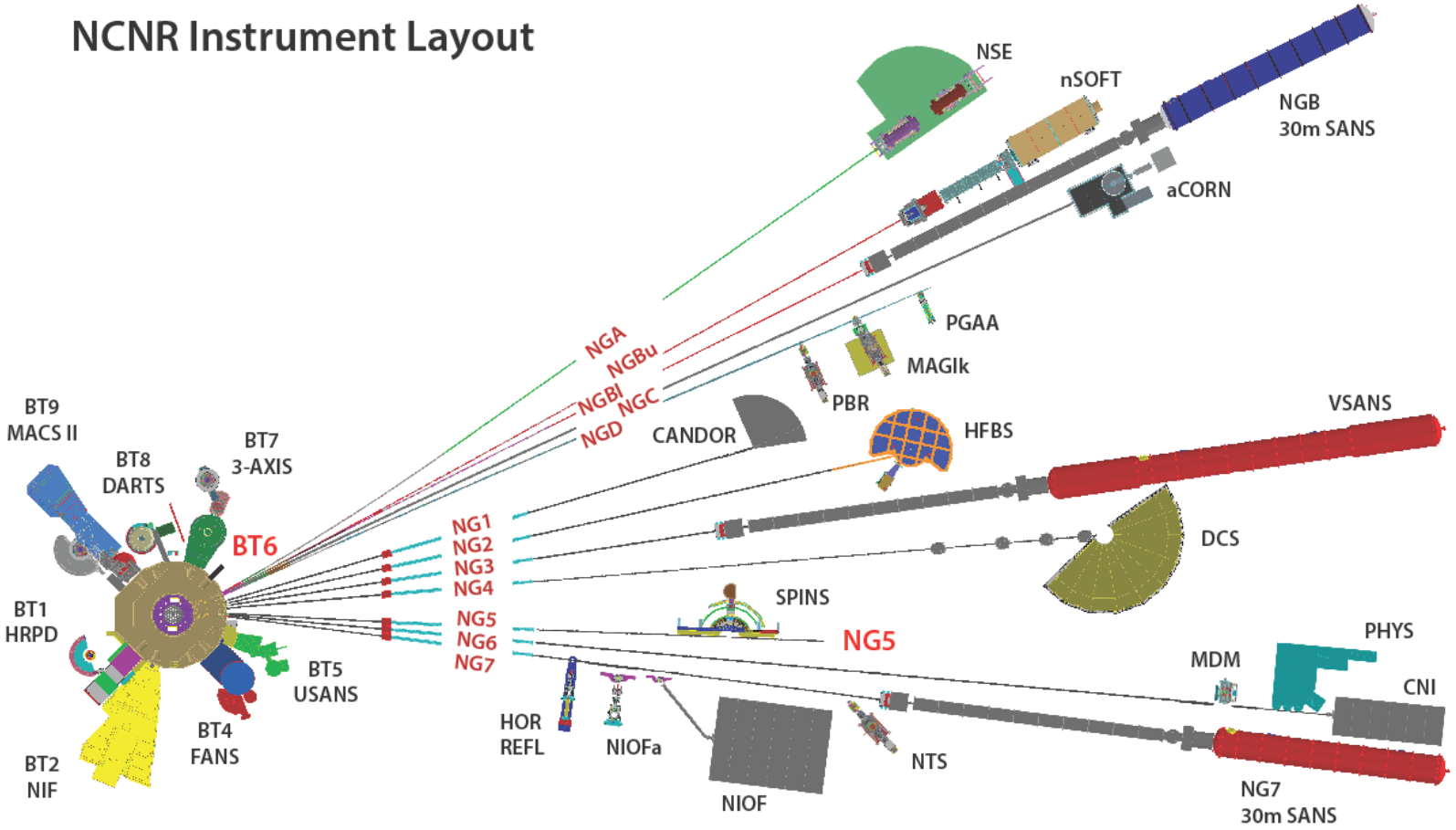

Cut-away View of the NBSR Core

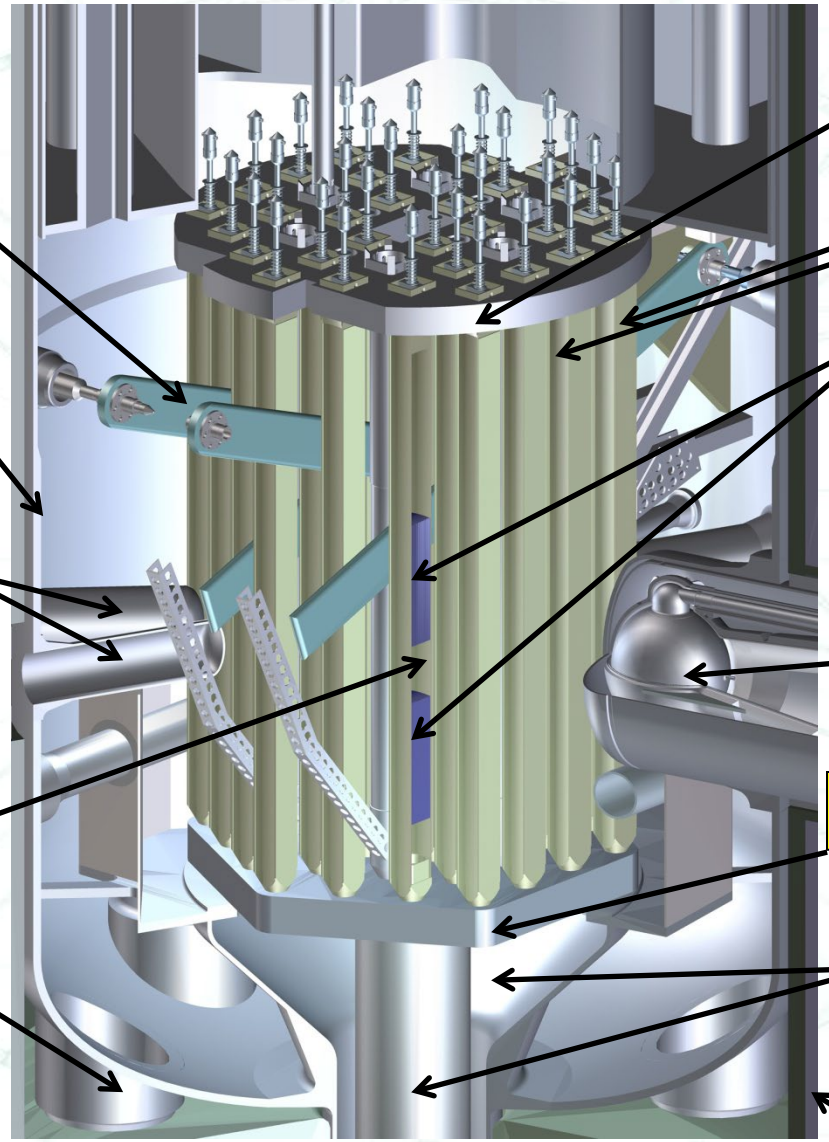

Fuel

- Highly enriched, U_3O_8 with Al dispersant, Aluminum clad
  - 34 (17x2) fueled plates
  - Total loading: ~350g U/element
  - Upper and lower fuel sections -- unfueled 18 cm gap to minimize high energy neutrons and gammas in cold neutron sources and beam tubes
- Four new fuel elements added after each 38-day cycle
- Elements in for 7 or 8 cycles

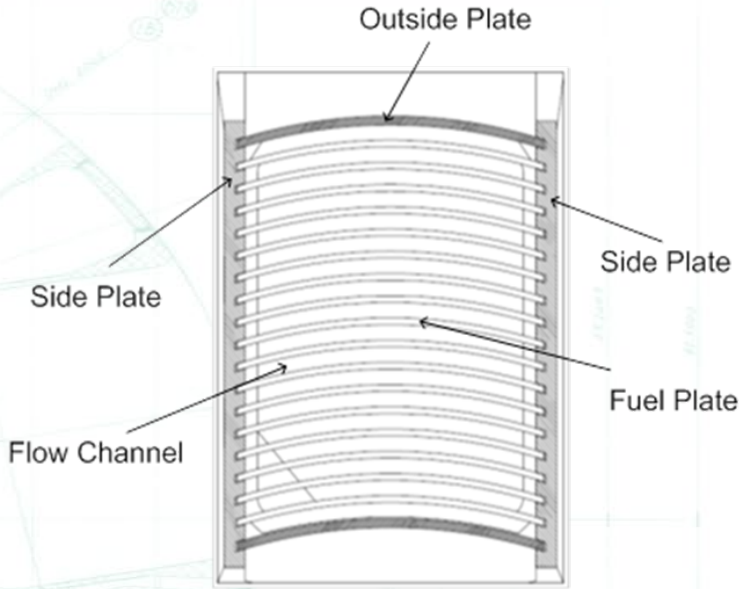

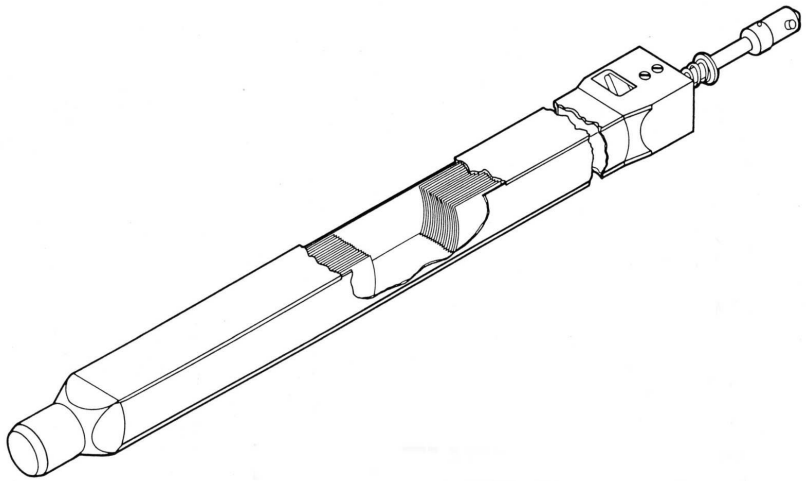

Refueling

- D_2O coolant: refueling is done blind
- All 30 elements are moved each refueling
  - Each core position has its own transfer tool
  - Elements are moved via transfer arms, lowered into core, then latched into position

Refueling the NBSR (2010)

Latching video

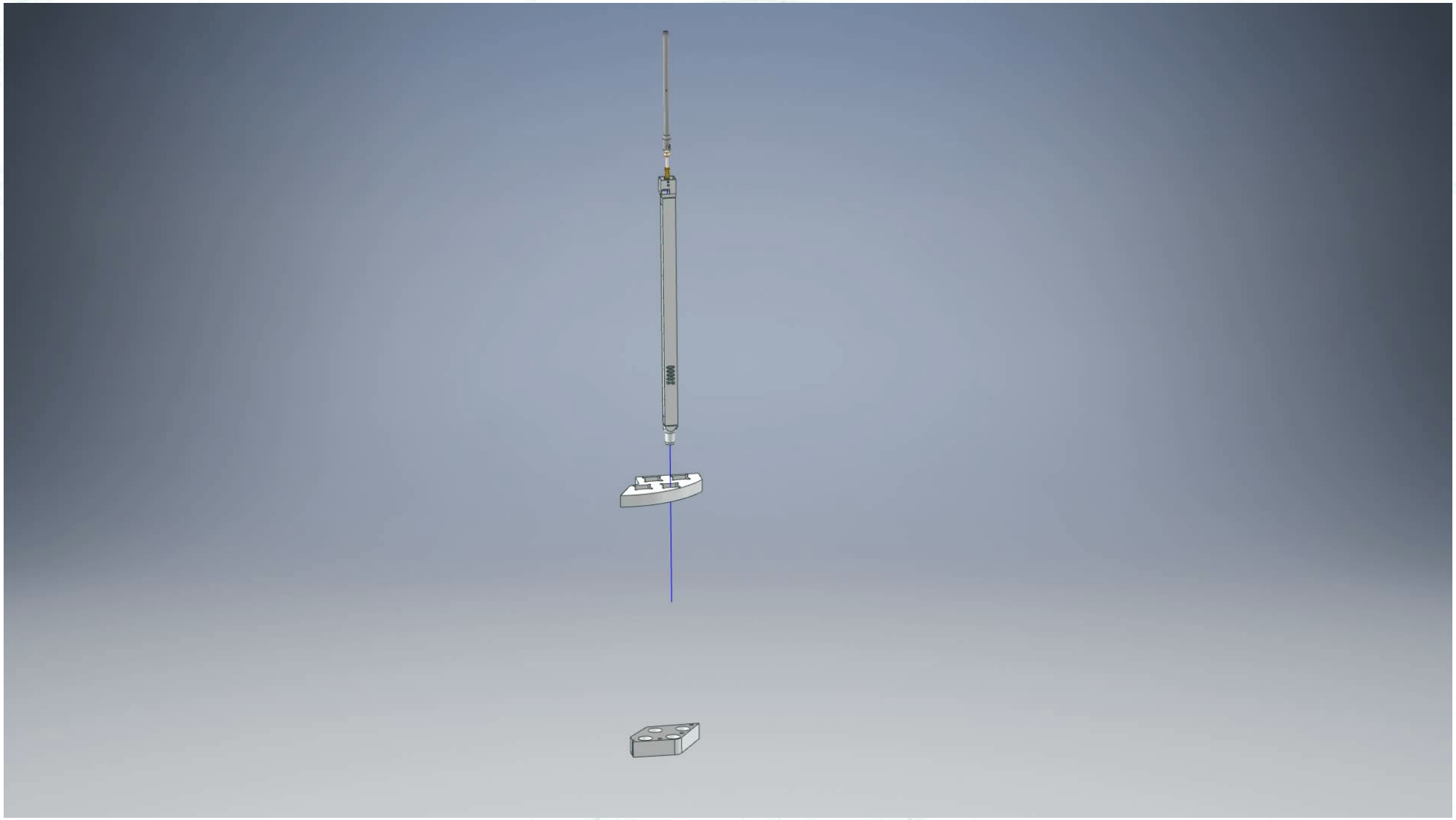

Refueling January 4, 2021

- Routine refueling performed, with latching and latch checks
- After-the-event review showed these checks were done incorrectly.
- 2nd cycle element was not latched.

- Startup was delayed ~1 month because of COVID concerns.
- Routine (daily) starting and stopping of primary pumps “pushed” the element into an area outside of flow.
- Not detected by any instruments prior to startup.

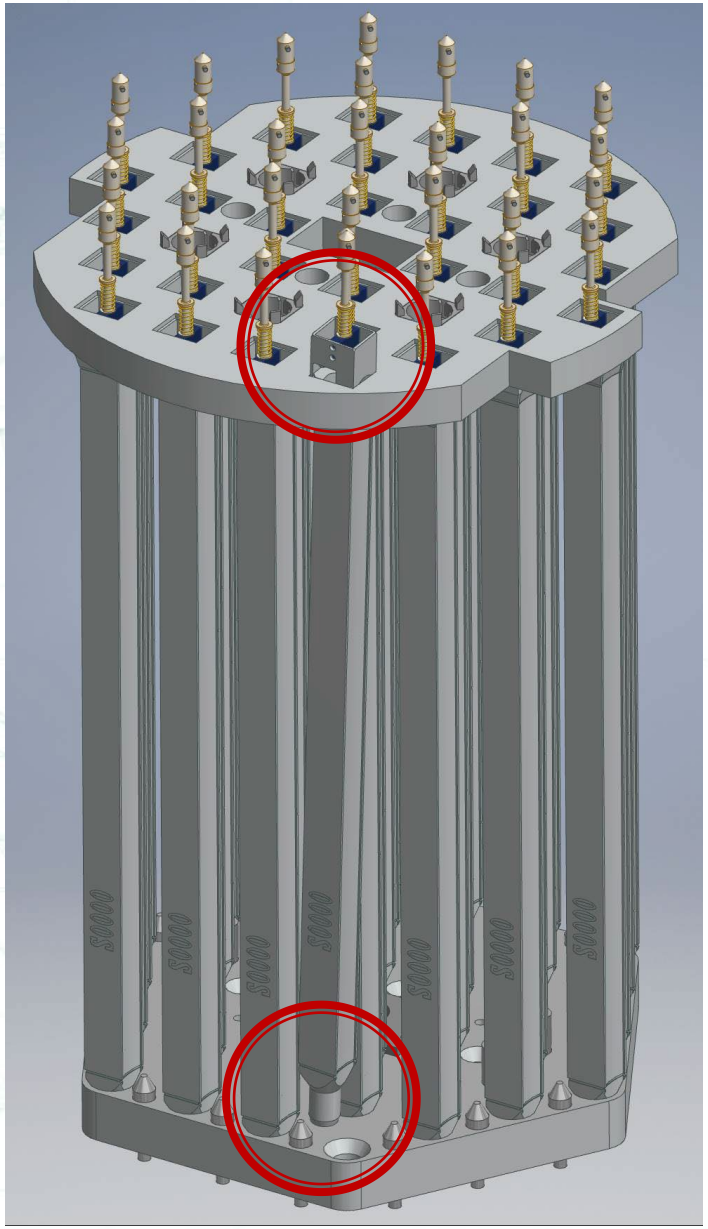

February 3 event

- 8:16 startup
- 9:00 approach to 10 MW
- 9:06 begin ascension to full power
- 9:07 sudden drop to about 7 MW
- 9:08 release of fission products
- 9:09 major scram via stack monitor reaching 50,000 cpm
- 9:16 alert declared
- 9:21 evacuation of control room due to high radiation levels
- 9:29 NRC notified

Reactor at your desktop!

nbsr.nist.gov/DataTrend.aspx?reactor

Home | Reactor | Secondary | Thermal Shield | Health Physics | Cold Source

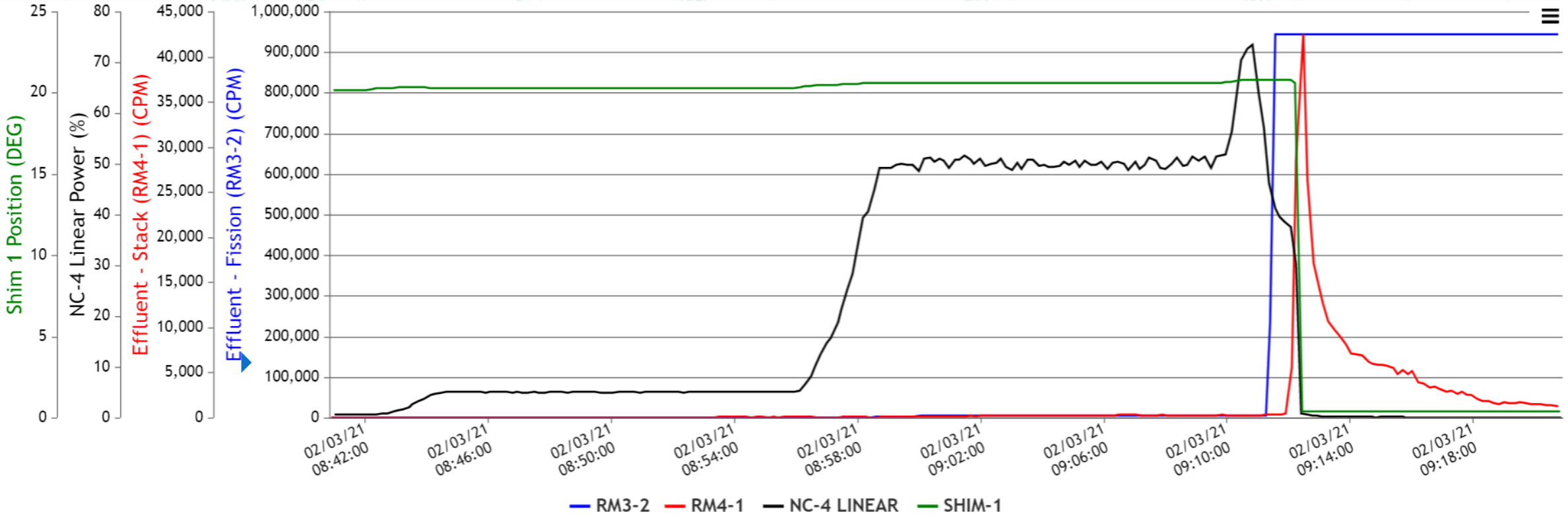

Date Format: dd/mm/YYYY HH:mm

Enter start date: 2021-02-03 8:40:53

Enter end date: 2021-02-03 9:20:53

☑Zoom X ☑Zoom Y ☐Log Y ☐Crosshair

Load | Download Excel

C2O Gas Holder Level
D2O Heat Exchanger HE-1A Outlet Temp
D2O Heat Exchanger HE-1B Outlet Temp
D2O Ion Exch Inlet Conductivity
D2O Ion Exch Outlet Conductivity
Effluent - Fission (RM3-2)
Effluent - Irradiated Air (RM3-4)
Effluent - N-16 (RM 3-1)
Effluent - N-16 (RM 3-3)

NIST Center for Neutron Research

NIST

Event response

- All systems operated as designed
- Good response by operators and health physics staff
- Radiation levels in control room necessitated evacuation shortly after event (Emergency Instruction: evacuate if projected exposure > 300 mrem)
  - Two operators briefly stayed behind to start shutdown actions
  - Three operators and one HP re-entered later that day to complete shutdown actions
- Total of 10 staff members were contaminated
  - Successfully decontaminated that day.

Personnel Doses

- Maximum total dose 1172 mrem
  - NRC annual limit: 5000 mrem
  - Doses were likely lower as dosimeters were contaminated.
  - Maximum Electronic Personal Dosimeter 182 mrem.
- Internal doses all from tritium
  - Likely not event related

Table 1: Maximum Doses by Exposure Group from the February 3, 2021 Reactor Event

Exposure Group	Maximum External Dose (mrem)		Maximum Internal Dose (mrem)	Maximum Total Dose (mrem)
	Deep Dose DDE	Shallow Dose SDE		
Operators in Control Room During Event	1172	2112	5.2	1172
Personnel Entering Confinement During the Event to Secure the Reactor	70	77	1.3	70.2
Individuals in the Building During the Event	37	38	NA	37

NOTE: The dose for the other individuals present during the event were typical and no additional doses were seen to these individuals as a result of the event.

NIST Center for Neutron Research	Document:	Emergency Instruction 0.3	
	Title:	Emergency Classification and Criteria	
	Revision:	A	Date: 12/14/15

2. Alert

2.1. Initial Criteria – any one of the following

2.1.1. RD 4-2 – Level 2

2.1.2. RD 4-1 – 50,000 CPM (FF-2 on)

2.2. Action Level Criteria

2.2.1. Actual or projected measurements at the Site Boundary which equal or exceed any of the following levels:

2.2.1.1. Radiological effluent dose: 75 mrem/24 hours

2.2.1.2. Radiation level: 20 mrem/ hour for 1 hour

2.2.1.3. 250 x Effluent Concentrations for Argon, Xenon, Krypton

2.2.1.4. 500 x Effluent Concentrations for other gases

2.2.1.5. Thyroid dose = 100 mrem

2.2.2. Fuel Cladding failure (High Helium Sweep Activity, RD 3-2 – 50,000 CPM) which is leading to the action levels listed in part 2.2.1 of this instruction.

2.2.3. Fuel handling accident outside the core with very high radiation/contamination release in accessible areas.

2.2.4. Security breach affecting the reactor confinement.

Boundary dose estimates

- Multiple air and particulate samples taken at stack and 400 m site boundary.
- Large uncertainties in site boundary measurements delayed downgrading of emergency. Eventually used stack samples and dilution factors.
- Feb. 3:
  - 1532: Downgraded to NOUE
  - 1935: Terminated emergency

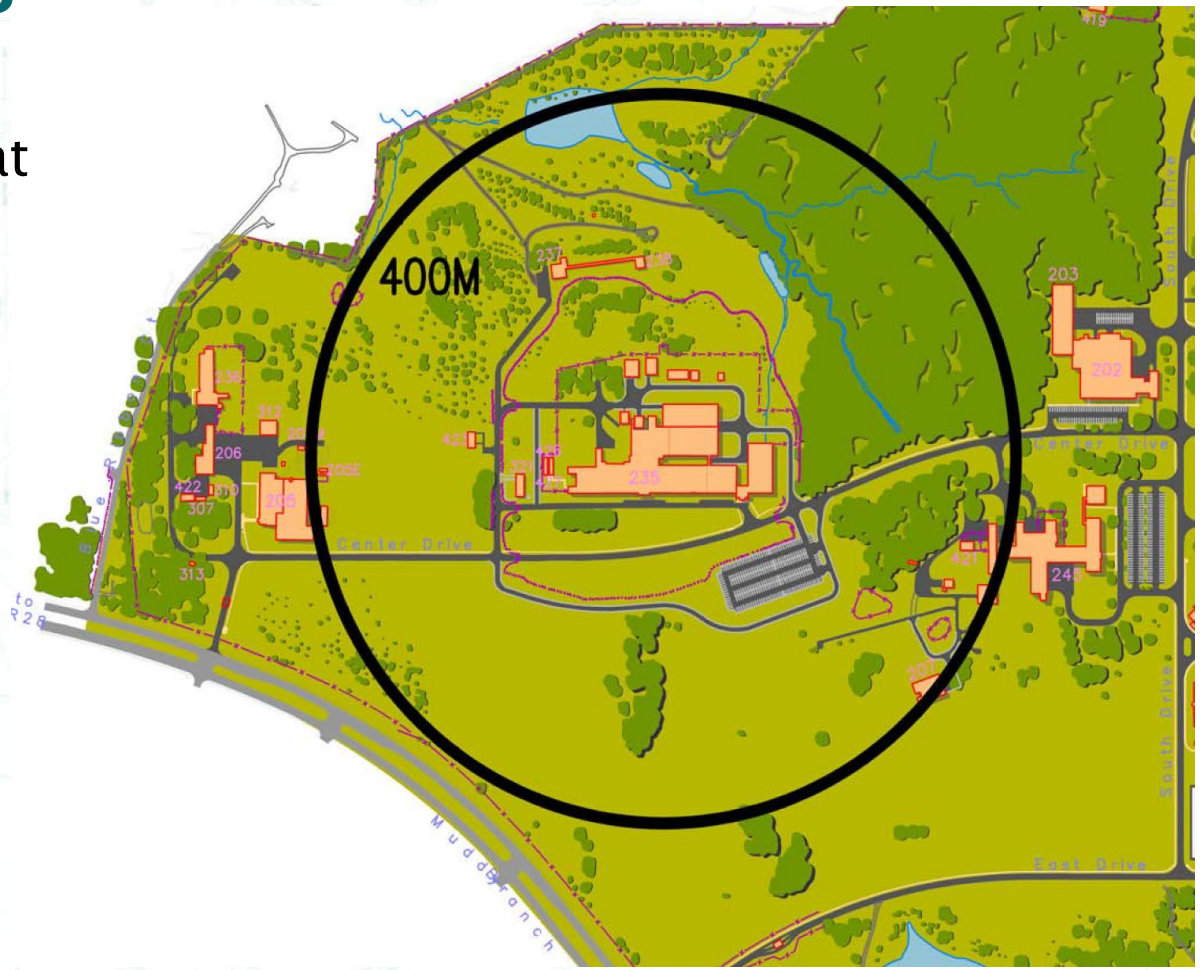

NBSR Emergency Planning Zone

Release Estimate

- Primary isotopes Xe-133, Xe-133m, Kr-83m
- Feb 3 – 6, 2021
  - Emergency ventilation
  - Total of 29.6 Ci released
- Results based upon stack samples
  - 400 m boundary samples had very low levels of Xe-138 (Cs-138), Xe-133, Xe-135
- Initial estimated dose to the public <0.5 mrem
  - Confirmed by NRC and DOE (CMHT)
  - DOE Dose Estimate 0.008 mrem (Feb 3-6)
- Feb 6 return to normal ventilation
  - Total of 15.4 Ci released Feb 7 thru April 30
  - Dose Estimate 0.006 mrem (NIST)
- Co-60 likely a result of cross contamination of sample equipment

Nuclide	Release Activity Feb 3-6, 2021 (Curies)	Release Activity Feb 7-April 30 (Curies)
Kr-83m	1.53E+00	
Kr-85m	5.16E-02	
Kr-87	9.03E-02	
Kr-88	1.14E-01	
Rb-88	9.35E-02	
Xe-137	4.91E-01	
Xe-138	5.10E-01	
Xe-131m	4.88E+00	3.04E+00
Xe-133	1.80E+01	1.05E+01
Xe-133m	9.70E-02	6.19E-02
Xe-135	1.30E+00	9.72E-02
Kr-85	2.49E+00	1.77E+00
Co-60	9.01E-13	
Cs-138	1.32E-12	
I-131		1.33E-4

Release Estimate (continued)

- Annual release limit 10 mrem / year
  - 10 CFR 20.1101(d)
- Annual Release (2020 Typical)
  - 1120 Ci Ar-41
  - 1273 Ci H-3
  - Annual Boundary Dose 0.8 mrem
- Event Total Boundary Dose
  - 0.014 mrem
  - 2% of normal annual release in terms of dose
- Maximum Hypothetical Accident (MHA)
  - 6.4 mrem offsite dose

Video Surveillance of Core

Began 2/23/21

Upper grid plate, positions H-6 and J-7

Lower grid plate, near position J-7

Safety Limit

- February 23: Video surveillance showed single element out of position with apparent fuel damage.
- March 5: Concluded that 450°C fuel safety limit had been exceeded, report to NRC in accordance with TS 6.6.1

6.6 Required Actions

6.6.1 Actions to Be Taken in the Event the Safety Limit is Exceeded

(1) The reactor shall be shutdown and reactor operations shall not be resumed until authorized by the NRC.

(2) An immediate notification of the occurrence shall be made to the Chief, Reactor Operations and Engineering and the Chief, Reactor Operations. The Chief, Reactor Operations and Engineering shall inform the NCNR director.

(3) Reports shall be made to the NRC in accordance with the specifications of Section 6.7.2. A written report shall include an analysis of the causes and extent of possible resultant damage, efficacy of corrective action, and recommendations for measures to prevent or reduce the probability of recurrence. The report shall be prepared by the Chief, Reactor Operations and Engineering and submitted to the SEC for review. The SEC shall review the report and submit it to the Director, NIST Center for Neutron Research director for approval. The Director shall then submit the report to the NRC.

Failed fuel element

- Element was identified as Element no. 1175, originally introduced into the core in October, 2020.
- Ran one cycle (38 days) with no issues.
- Review of QA records identified no anomalies in manufacturing or acceptance.

Video Surveillance of Core

Failed fuel element prior to moving from lower grid plate

Video still shot of failed fuel element as it was released from the lower grid plate

Video Surveillance of Core

Failed element resting on top of installed debris cap

Bottom of failed fuel element prior to removal from the core on August 5

Root Cause Investigation

- March 10: Internal Technical Working Group (TWG) formed to investigate root cause
- May 13: TWG report complete; letter to NRC reporting inadequacies in:
  - Training and procedures in fuel latching
  - Procedural compliance
  - Management oversight
- June 3 follow-up: finding that element could inadvertently be unlatched by use of refueling tool without rotational force

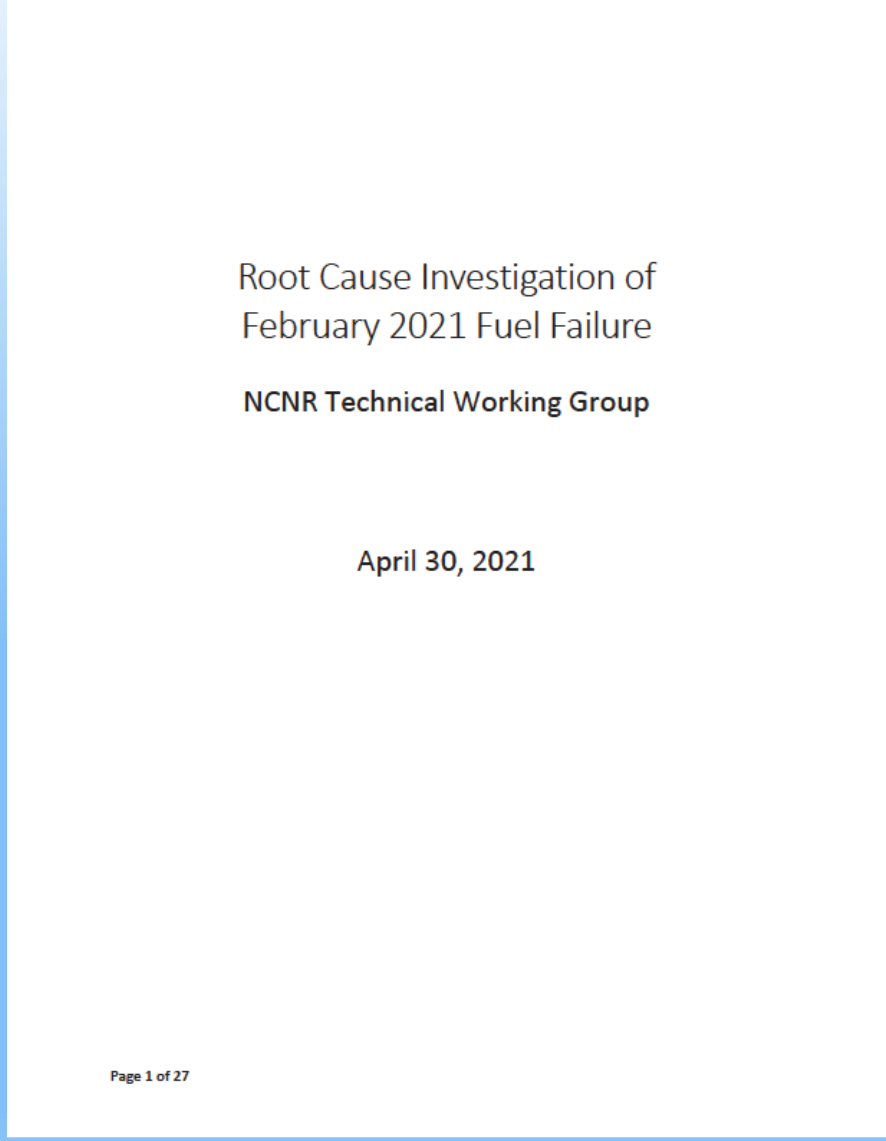

Root Cause Investigation of February 2021 Fuel Failure

NCNR Technical Working Group

April 30, 2021

Page 1 of 27

Safety Evaluation Committee (SEC) Investigation

- May 14: SEC Subcommittee formed to investigate response, root cause review and corrective actions
  - 5 people, NIST and external
- August 12: report complete
- Two additional root causes:
  - Lack of change management program
  - Culture of complacency
- 24 recommended corrective actions and program improvements

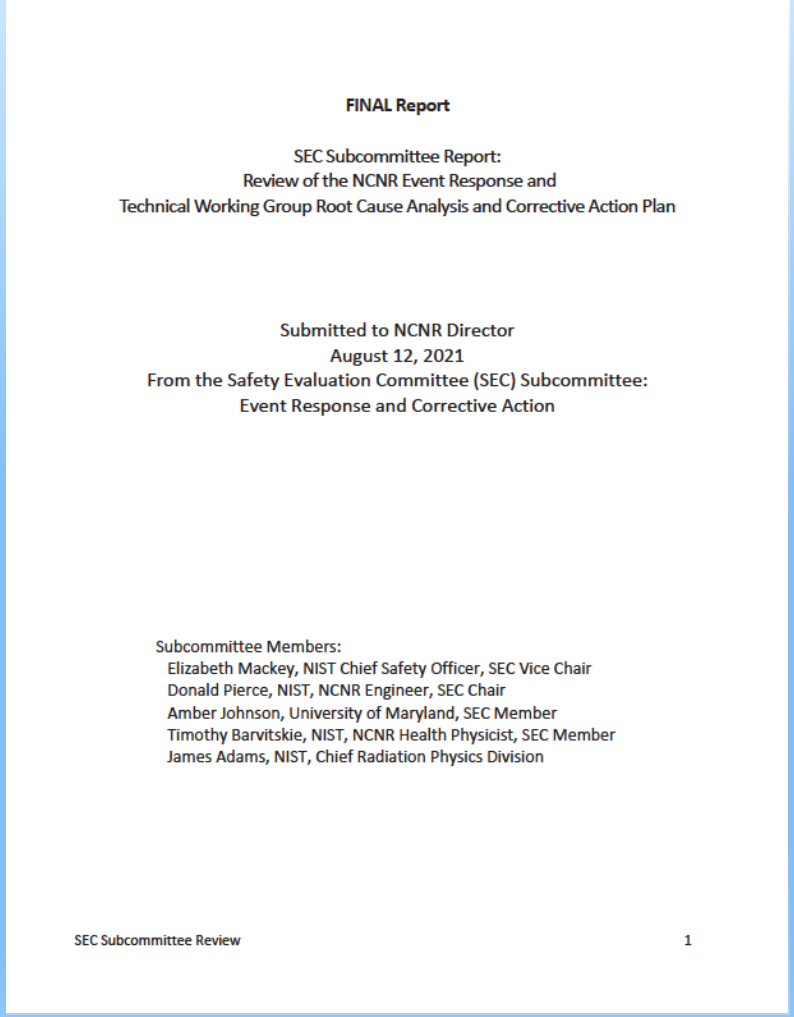

FINAL Report

SEC Subcommittee Report:
Review of the NCNR Event Response and
Technical Working Group Root Cause Analysis and Corrective Action Plan

Submitted to NCNR Director
August 12, 2021
From the Safety Evaluation Committee (SEC) Subcommittee:
Event Response and Corrective Action

Subcommittee Members:
Elizabeth Mackey, NIST Chief Safety Officer, SEC Vice Chair
Donald Pierce, NIST, NCNR Engineer, SEC Chair
Amber Johnson, University of Maryland, SEC Member
Timothy Barvitskie, NIST, NCNR Health Physicist, SEC Member
James Adams, NIST, Chief Radiation Physics Division

SEC Subcommittee Review 1

Corrective Actions -- Management

- Change management:
  - New Aging Reactor Management program
  - Organizational realignment, including additional training shift
  - Procedure overhaul with compliance audits
  - Managing changes via Corrective Action Program
- Continuous improvement
  - Extensive staff participation -- 19 teams of 56 NCNR staff formed to formulate detailed corrective actions implementation and recovery tasks.
  - Safety culture
  - Benchmarking with other facilities

Corrective Actions -- Training

- Proficiency training
- Qualification for fuel movements
- Programs rewritten for better knowledge transfer
- Development of standards for supervisors
  - Qualification and oversight training
- Periodic management reviews of program

Corrective Actions -- Procedures

- Personnel adherence
  - Safety more integrated into procedures
  - Revision to INPO 11-003
- Rewrite fueling procedures
  - Capture details
  - Latch checks done prior to final pump restart
  - Redundant rotation check
- New procedures
  - Visual checks
  - No contact with fuel head after visual check

Corrective Actions -- Equipment

- Visual Checks
  - Testing completed
- Tools assessment
- Discontinue use of height checks
- NI noise gate
  - To alert operator of abnormal signal

NCNR interactions with NRC

- NRC Special Inspection Team began 2/8/21
  - Physical or virtual presence at daily meetings, special evolutions
- February – May: Written reports on event, exceeding safety limit, and findings of inadequacies
- July: Start weekly calls with NRC management
- October 1: Root causes, planned corrective actions and request for permission to restart
- October–present:
  - Supplemental reports
  - Information furnished for NRC audit process
- December 23: LAR submitted to require both rotation and visual latch checks in technical specifications

Reactor Status

- 27 Fuel elements removed from core, including damaged element
  - Final three removal in progress
- Vessel cleanup complete
- Primary system cleanup using filter elements started late March
- Evaluation of remaining fuel elements for possible reuse: backflow and inspection

Vessel cleanup February 2022

Conclusion

- Feb. 3, 2021 event was unprecedented in recent U.S. research reactor history.
- NIST is committed to restart reactor when all necessary corrective actions are complete, and NRC allows.
- NIST Public Affairs has been invaluable in facilitating communications.
- External reviews found that response on the day of the event was appropriate.
- Frequent and open communications with NRC is key to recovery and restart.

Backup slides

Nuclear Instrument response during event

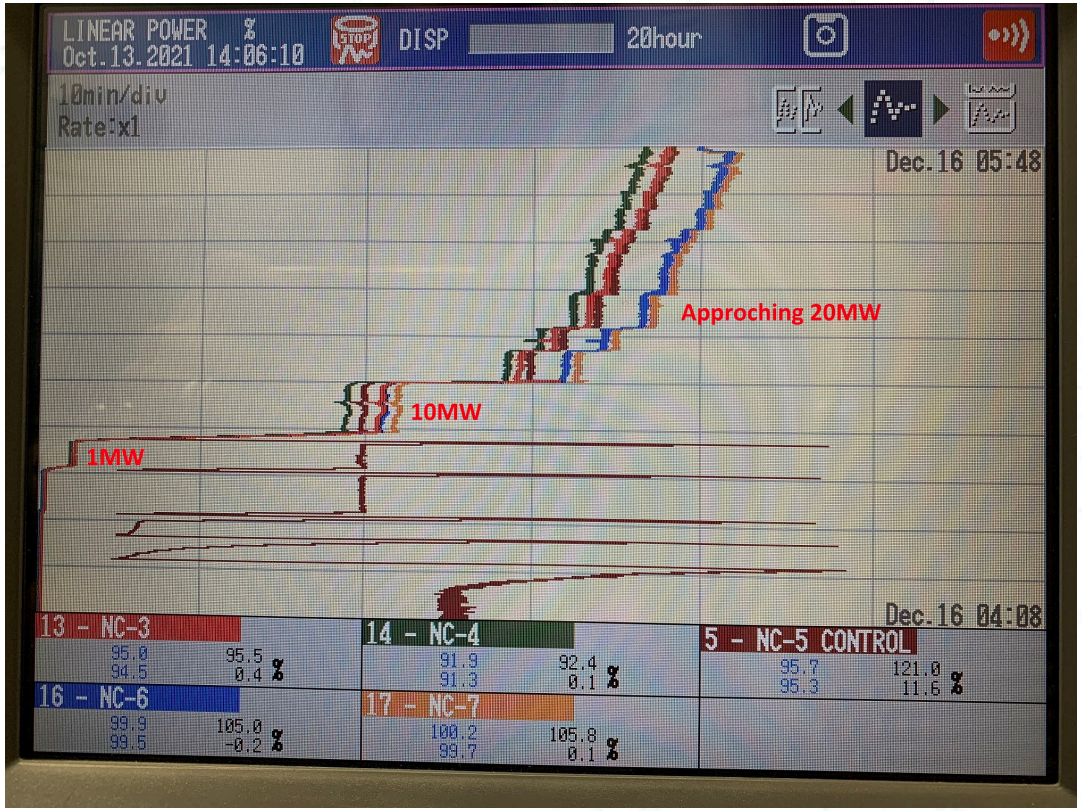

Normal Startup

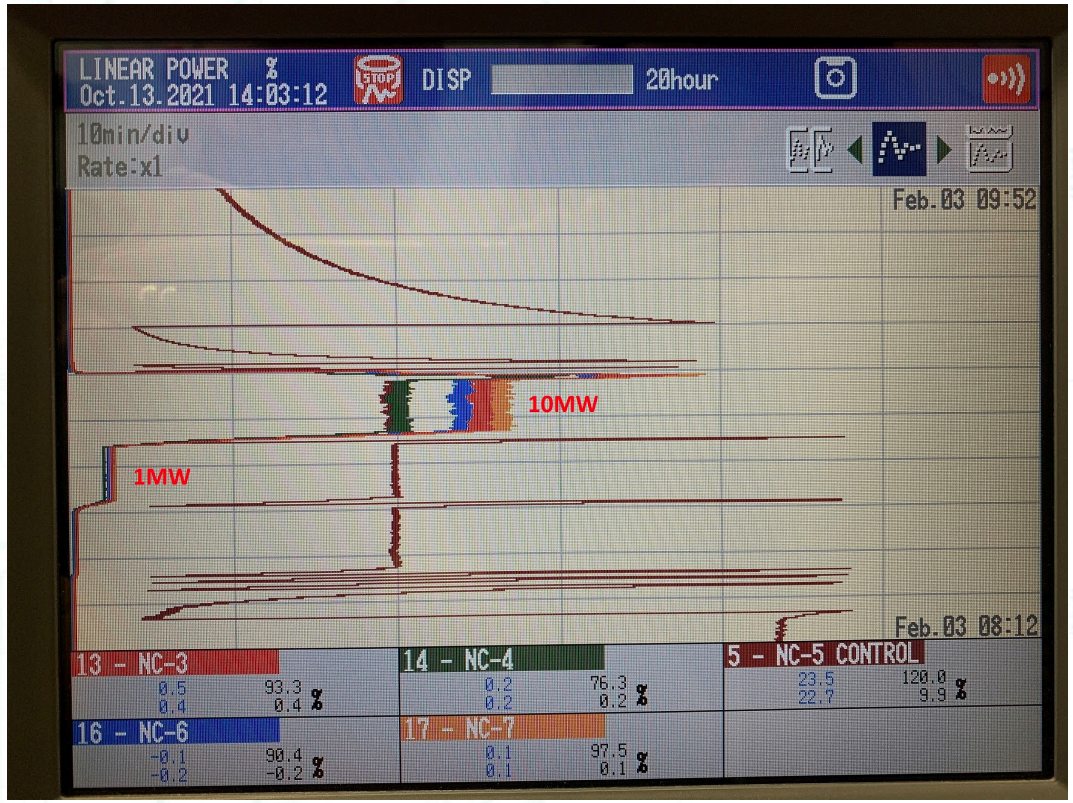

Startup February 3, 2021

Operator Experience

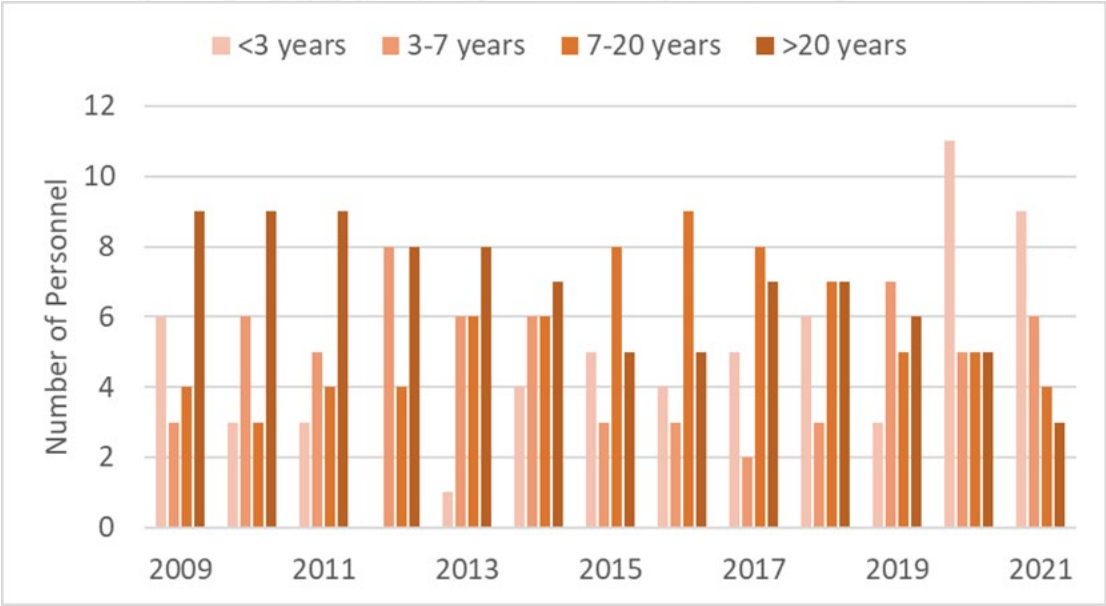

Experience of Reactor Operators

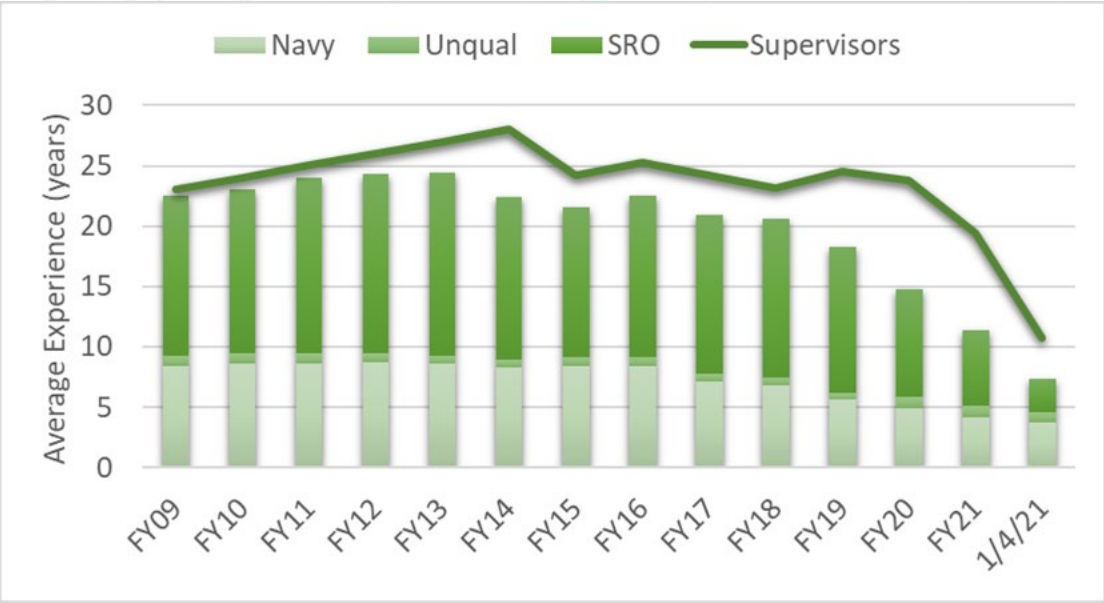

Average Experience of SROs and Supervisors

NIST Event

NRC Event Brief to ACRS

March 3, 2022

Key Messages

- The NIST reactor is in a safe shutdown condition and may not restart until authorized by the Commission
- Most of the fuel removed from the reactor vessel (3 of 30 elements remain) and recovery actions are underway
- Offsite dose to the public from the event was near background levels
- Radiation dose to the workers from the event was well below regulatory limits
- NRC independently evaluated the consequences of the event and is reviewing the licensee's request to restart the reactor
- NRC review and inspection activities are still ongoing

NRC Response – Executive Summary

- Special Inspection Team (SIT) Dispatched to Site
  - Team chartered to review the event and licensee response
- Technical Review Team Assembled
  - NRC technical experts to review NIST root cause results, corrective actions, and recovery activities
  - Results of technical review will inform restart decision
- Status of Teams
  - SIT report is going through concurrence
  - NRC technical review team initiated an audit to more closely review information from licensee
  - Additional inspection activities will continue prior to and following any authorized restart

NRC Review of Event

- NIST reported to the NRC that partial melting of one fuel element occurred providing indication that the safety limit was exceeded
- The safety limit as stated in the technical specifications is:
  - The reactor fuel cladding temperature shall not exceed 842°F (450°C) for any operating conditions of power and flow
- NIST reported very limited radiological release during and following the event
- NRC staff compared the event and radiological dose consequence to the accident analysis in the NIST safety analysis report
- NRC staff determined that the event was within the radiological release amount identified in the maximum hypothetical accident safety analysis

Maximum Hypothetical Accident

- NUREG-1537, Part 2 provides the standard review plan and acceptance criteria for licensing non-power reactors
- Chapter 13 discusses the maximum hypothetical accident (MHA) as a postulated accident scenario whose potential consequences are shown to exceed all credible accidents
- MHA at NIST in the safety analysis report
  - Complete blockage of flow to one fuel element by unspecified means
  - All the noble gas fission products are assumed to be released into the primary coolant and quickly collect in the helium space at the top of the reactor vessel
  - Maximum dose to the public, at the exclusion boundary, is calculated to be 7 mrem

MHA Compared to NIST Event

- Flow blocked to one element
- Partial fuel melting released fission products
  - Krypton was observed in the stack monitor
  - Visual evidence of “once molten material” that appears to be previously melted fuel that has since resolidified
  - NIST (as confirmed by the NRC staff) calculated the total dose to the public during the event as ranging from 0.00035 mrem to 0.0008 mrem, which is a small fraction of the theoretical dose consequence

Restart Requires Commission Authorization

- 10 CFR 50.36(c) requires technical specifications to include safety limits, which are defined as limits upon important process variables that are found to be necessary to reasonably protect the integrity of certain physical barriers that guard against the uncontrolled release of radioactivity

- 10 CFR 50.36(c) states that in the event of a safety limit exceedance:
  - The reactor must be shut down
  - The licensee shall notify the Commission
  - The licensee shall review the matter and record the results of the review, including the cause of the condition and the basis for corrective action taken to preclude recurrence
  - Operation must not be resumed until authorized by the Commission

Restart Request Review Team

- Primary Technical support from multiple divisions including:
  - Division of Advanced Reactors and Non-Power Production and Utilization Facilities (Project Manager and Inspectors)
  - Division of Safety Systems
  - Division of Engineering and External Hazards
  - Division of New and Renewed Licenses
  - Division of Radiation Protection and Accident Dose
- Main Review areas
  - Reactor Vessel Internals
  - Mechanical Engineering and Inservice Testing
  - Plant Systems
  - Nuclear Methods, Fuels, and Systems

NRC Restart Request Review

- NIST submitted a restart request to the NRC
- NRC staff has initiated an audit to perform a more detailed review of the following items:
  - Root cause corrective actions
  - Actions to prevent recurrence
  - Cleanup activities
  - Evaluation of structures, systems, and components potentially affected by the event

NRC Staff Next Actions

- NRC staff continue review of NIST inspection results, tests, and analyses to determine if a sound technical basis exists to authorize restart

- NRC oversight and inspection processes will continue as the SIT closes out and the restart/enhanced inspection process begins

Summary

- NIST reactor is in event recovery with cleanup activities proceeding and inspection activities planned
- NRC approval is required for restart
- Radiation release was a small fraction of regulatory limits and within the bounds of the NIST MHA
- The NRC will continue its inspection activities prior to and following any authorized reactor restart
- The NRC will not authorize restart until it has determined that restart will be protective of public health and safety.

Questions