Official Transcript of Proceedings

NUCLEAR REGULATORY COMMISSION

Title: Advisory Committee on Reactor Safeguards
Plant License Renewal Subcommittee

Docket Number: (n/a)

Location: Rockville, Maryland

Date: Thursday, April 23, 2015

Work Order No.: NRC-1534 Pages 1-272

NEAL R. GROSS AND CO., INC.
Court Reporters and Transcribers
1323 Rhode Island Avenue, N.W.
Washington, D.C. 20005
(202) 234-4433

1
2
3
4 DISCLAIMER
5
6
7 UNITED STATES NUCLEAR REGULATORY COMMISSION'S
8 ADVISORY COMMITTEE ON REACTOR SAFEGUARDS
9
10
11 The contents of this transcript of the
12 proceeding of the United States Nuclear Regulatory
13 Commission Advisory Committee on Reactor Safeguards,
14 as reported herein, is a record of the discussions
15 recorded at the meeting.
16
17 This transcript has not been reviewed,
18 corrected, and edited, and it may contain
19 inaccuracies.
20
21
22
23

UNITED STATES OF AMERICA

NUCLEAR REGULATORY COMMISSION

+ + + + +

ADVISORY COMMITTEE ON REACTOR SAFEGUARDS

(ACRS)

+ + + + +

PLANT LICENSE RENEWAL SUBCOMMITTEE

+ + + + +

THURSDAY

APRIL 23, 2015

+ + + + +

ROCKVILLE, MARYLAND

+ + + + +

The Subcommittee met at the Nuclear Regulatory Commission, Two White Flint North, Room T2B1, 11545 Rockville Pike, at 8:30 a.m., Gordon R. Skillman, Chairman, presiding.

COMMITTEE MEMBERS:

GORDON R. SKILLMAN, Subcommittee Chairman

RONALD G. BALLINGER, Member

SANJOY BANERJEE, Member

JOY L. REMPE, Member

PETER C. RICCARDELLA, Member

STEPHEN P. SCHULTZ, Member

JOHN W. STETKAR, Member

ACRS CONSULTANTS:

JOHN J. BARTON

WILLIAM J. SHACK

DESIGNATED FEDERAL OFFICIAL:

KENT L. HOWARD, SR.

ALSO PRESENT:

NELSON AZEVEDO, ENO

RICHARD BURRONI, ENO

ALAN COX, ENO

LARRY COYLE, ENO

FRED DACIMO, ENO

YOIRA DIAZ, NRR/DLR

ROBERT DOLANSKY, ENO

RICHARD DRAKE, ENO

WILLIAM GLEW, ENO

MEL GRAY, R-I

KIMBERLY GREEN, NRR/DORL

PETER GUGLIELMINO, ENO

ALLEN HISER, NRR/DLR

DAVE LACH, ENO

DON MAYER, ENO

CHRIS MILLER, NRR/DLR

MICHAEL C. MODES, R-I

DENNIS C. MOREY, NRR/DLR

DOUG PICKETT, NRR/DORL

JEFF POEHLER, NRR/DE

BOB WALPOLE, ENO

MIKE WENTZEL, NRR/DLR

WALTER WITTICH, ENO

GARRY YOUNG, ENO

T-A-B-L-E O-F C-O-N-T-E-N-T-S

Opening Remarks

Gordon Skillman.....5

Staff Introductions

Chris Miller.....8

Entergy Nuclear Operations, Inc. - Indian Point Nuclear Generating Units 2 and 3

Fred Dacimo.....10

Bob Dolansky.....66

Nelson Azevedo.....70

Alan Cox.....88

NRC Staff Presentation

Chris Miller.....118

Kimberly Green.....118

Mel Gray.....126

Public Comments.....217

Adjourn

1 P-R-O-C-E-E-D-I-N-G-S

2 8:29 a.m.

3 CHAIRMAN SKILLMAN: Good morning, ladies

4 and gentlemen. This meeting will come to order. I'm

5 Gordon Skillman. I'm the Chairman of the Plant License

6 Renewal Subcommittee.

7 Today we are here to review the 10 CFR Part

8 54 issues pertaining to the license renewal activities

9 by Entergy at the Indian Point Nuclear Generation

10 Station, Units 2 and 3. Our last meeting on this topic

11 was in 2009. We are interested in learning the current

12 status from both the licensee and from the NRC staff

13 on the license renewal activities. I would like to

14 reinforce that our focus will be on the 10 CFR Part 54

15 nuclear safety issues. Issues not regulated within

16 this specific part of Title 10 are not part of today's

17 agenda. The Subcommittee will review and discuss the

18 second supplement to NUREG-1930 Safety Evaluation

19 Report related to the license renewal of Indian Point

20 Nuclear Generating Units 2 and 3.

21 ACRS members in attendance are Dr. Peter

22 Riccardella, Dr. Stephen Schultz, the distinguished

23 John Stetkar, the current chairman of the ACRS, Dr. Joy

24 Rempe, Dr. Ron Ballinger. And I'm looking for our

25 distinguished John Barton, a former ACRS member. And

1 Dr. William Shack, consultant, former ACRS chairman.
2 Mr. Kent Howard of the ACRS is the designated federal
3 official for this meeting.
4 Now listen up, we're going to do something
5 different in this meeting. In order to respect the
6 time use of the public that are participating both on
7 the bridge line and in the meetings rooms, and to
8 respect the time of the staff, we're going to conduct
9 this meeting in two sessions. This morning we will
10 hear from Entergy Nuclear Operations regarding these
11 matters. And at the end of their presentation, or at
12 approximately 1100, whichever comes earlier, we will
13 open the microphones and bridge line to receive
14 comments from members of the public.
15 This afternoon we will hear from the Office
16 of Nuclear Reactor Regulation and Region I personnel
17 regarding these matters. Like in the morning, at the
18 end of these presentations, or at approximately 1600,
19 whichever is earlier, we will open the microphone and
20 the bridge line to receive comments from members of the
21 public.
22 The Subcommittee will gather information,
23 analyze relevant issues and facts and formulate
24 proposed positions and actions as appropriate for
25 deliberation by the Committee pertaining to 10 CFR Part

1 54 requirements for renewal of operating licenses for
2 nuclear power plants.
3 The rules for participating in today's
4 meeting have been announced as part of the notice of
5 this meeting previously published in the *Federal*
6 *Register*. We have not received written comments or
7 requests for time to make oral statements for members
8 of the public regarding today's meeting, and the entire
9 meeting will be open to the public.
10 As I stated earlier, there will be a phone
11 bridge line. To preclude interruption of the meeting,
12 the bridge line will be placed in a listen-in mode
13 during the presentations and the Committee discussion.
14 A transcript of this meeting is being kept
15 and will be made available as stated in the *Federal*
16 *Register* notice. Therefore, I request that
17 participants in this meeting use the microphones
18 located throughout the meeting room when addressing the
19 Subcommittee. Participants are requested to please
20 identify themselves and speak with sufficient clarity
21 and volume so that they can be readily heard. I
22 respectfully request that all in attendance please
23 silence your electronic devices.
24 I would like to note that Dr. Sanjoy
25 Banerjee has joined us.

1 As some have noticed, I have injured my eye
2 in an accident several days ago, and in the best
3 interests of the ACRS, the license and the staff, I will
4 be transferring the meeting leadership to Mr. John
5 Stetkar, ACRS chairman, after the meeting is underway.
6 We will now proceed with the meeting and
7 I call upon Chris Miller to begin the presentation.
8 MR. MILLER: Thank you, Mr. Skillman.
9 I'm Chris Miller, the director of the Division of
10 License Renewal. And seated with me are some of the
11 branch chiefs in our division, Yoira Diaz to my left,
12 Dennis Morey. We also have Mel Gray, branch chief from
13 Region I with us, and I believe we'll have Michael Modes
14 joining us shortly. And a number of other staff that
15 we'll introduce as we do our presentations in the
16 afternoon.
17 We appreciate the opportunity to present
18 to the ACRS the developments in the Indian Point license
19 renewal since the last time we briefed the ACRS
20 Subcommittee. It's been over five years, as you noted,
21 since our last meeting.
22 Since that time the staff issued two
23 supplements to the Safety Evaluation Report to reflect
24 the update on Indian Point's license renewal
25 application. As was indicated in the opening remarks,

1 the purpose of today's meeting is focused on changes
2 relevant to license renewal safety review. Today's
3 presentations will provide a historical overview of the
4 license renewal safety review and activities relevant
5 to the implementation of the Aging Management Programs.
6 In addition one of the topics we want to
7 mention is the concept of timely renewal and
8 specifically how it applies to Indian Point. As I'm
9 sure you're aware, the operating license for Indian
10 Point 2 was originally due to expire in September of
11 2013 and the operating license for -- the expiration
12 date for Indian Point is December of this year. Our
13 timely renewal regulations allow for continued
14 operation of a facility past its original license
15 expiration date if a number of factors are met, and one
16 of these is the submittal of an accepted license renewal
17 application within the time requirements that the
18 regulations require.
19 We will get into more detail later in the
20 staff's presentation as to the legal and regulatory
21 basis for this and the activities that Entergy and the
22 staff completed prior to the Indian Point license
23 expiration date. We want to emphasize that while the
24 operating license date for Unit 2 is in timely renewal,
25 Entergy must continue to meet all the requirements of

its operating license, thus NRC's reactor oversight activities will continue. Further, we want to note that the staff has verified Entergy's implementation of Aging Management Programs for Unit 2 which are now part of the plant's current licensing basis.

At this time I'd like to turn the presentation over to Entergy's management to introduce their team and commence their presentation. Fred?

MR. DACIMO: Okay. Thank you very much.

Okay. Good morning and thanks for the opportunity today. We have a rather large team with us that transcends what's at the table. I'd like to take a few minutes to introduce everybody, because I'm sure as we have our conversation this morning there will be questions that we probably at the table here cannot answer and we'll refer to our team members that are in the audience.

This morning we'll go through just brief introductions of who we are. We'll talk about plant status. We'll also discuss about our license renewal status and where we stand. We'll talk about timely renewal activities, plant modifications that have been made over the last few years. We'll discuss SER Supplement 2. And you can see some of the specifics on the slide I believe behind me, as well as I'll have

1 some concluding remarks. And it's obvious questions
2 as we go through this presentation would be welcomed
3 and will keep it interesting.
4 We have a photograph here of Indian Point.
5 You can see Indian Point 2 is on your left. Indian
6 Point 3 is on the right. Indian Point 1 is in the
7 center. You can see the turbine buildings. You can
8 see the containment structures. You can see the new
9 office building that Entergy when we purchased the
10 facility back in 2001 constructed to house our
11 engineering and all our support personnel. You'll
12 hear about some of the investments that we made in the
13 infrastructure for this facility to bring this plant
14 along and have it prepared and operate well into the
15 20 years and potentially beyond if that happens. And
16 obviously right in the forefront is the Hudson River.
17 This morning we have Larry Coyle, who is
18 our site vice president. My name is Fred Dacimo. I'm
19 vice president for license renewal, former site VP. We
20 have Bob Walpole with us. I see Bob in the back. He
21 is our manager of regulatory assurance. Garry Young
22 is our director for the Corporate License Renewal
23 Programs. Alan Cox is the manager of license renewal,
24 technical. Richard Drake is our supervisor for civil
25 engineering. We have Nelson Azevedo on my left as our

1 supervisor of Code Programs. Richard Burroni is our
2 director of engineering. We also have Don Mayer, who
3 is our director of Unit 1 and Special Projects.
4 William Glew is our associate general counsel. We have
5 Walter Wittich, which is our engineering supervisor at
6 Indian Point. We also have Dave Lach as our
7 implementation project engineer. And we have Robert
8 Dolansky, who's our senior lead engineer on this
9 project.
10 The status of our plants this morning is
11 Indian Point 2 is at 100 percent power, 1,062 megawatts
12 electric. It's 401 days on line and running safely and
13 correctly day in and day out. Indian Point 3 is 100
14 percent power, 1,073 megawatts electric, 30 days on
15 line. We just completed a 23-day refuel outage. That
16 refuel outage was conducted safely, correctly and
17 really the facility completed all the work that they
18 wanted to do. So that was very positive.
19 The next refueling outages for the units
20 are the spring of 2016 for Indian Point 2 and spring
21 of 2017 for Indian Point 3. Both of these units are
22 on roughly two-year cycles.
23 CHAIRMAN SKILLMAN: You say roughly
24 two-year cycles?
25 MR. DACIMO: Well, in sense of full power

1 days. Okay? That's the way it works out. We conduct
2 outages in the spring time.
3 CHAIRMAN SKILLMAN: These are 24-month
4 cores?
5 MR. DACIMO: Yes, absolutely, 24-month
6 cores.
7 CHAIRMAN SKILLMAN: Okay. Thank you.
8 MR. DACIMO: Entergy's license
9 application was docketed in 2007. And Indian Point 2,
10 as previously mentioned by Chris, entered a period of
11 extended operation on September 28th, 2013, and the
12 license remains valid and in effect under the timely
13 renewal provision under the federal regulations.
14 Indian Point 3 will enter a period of extended operation
15 on December 12th, 2015 under the timely renewal
16 provision also.
17 The license renewal project has been
18 ongoing for seven years. It's been a significantly
19 long-term project and is very comprehensive. We spent
20 more than 33,000 man-hours preparing these facilities
21 for license renewal, for entering the period of
22 extended operation, and we'll discuss more about that
23 downstream. But that 33,000 man-hours really is
24 Entergy man-hours, which includes our engineering
25 hours, our inspection hours, our maintenance team

1 hours, etcetera. It does not include hours that are
2 associated with the NRC.
3 We also are involved in two other ongoing
4 major proceedings that is somewhat supportive of
5 license renewal that the NRC is also reviewing. One
6 is we need a U.S. Clean Water Act Water Quality
7 Certificate. It's a 401 Water Quality Certificate
8 that is associated with potentially license renewal.
9 And also our CZMA consistency certification. There is
10 ongoing litigation associated with the State of New
11 York on these two topics, but we also have these issues
12 before the Nuclear Regulatory Commission.
13 The NRC issued a supplement, as you heard
14 before, to the FSEIS in June of 2013. We made a
15 supplement. We made a request requesting that the
16 FSEIS be updated as a result of some additional aquatic
17 information that we required. The NRC reviewed that.
18 They're scheduled to issue a draft of the FSEIS update
19 in July of 2015, and we expect to see the final FSEIS
20 actually implemented or issued in March of 2016.
21 The NRC issued the SER in 2009 with updates
22 in 2011 and '14. All of the SERs basically said the
23 plant is safe to operate for the next 20 years. There
24 are no SER open items.
25 The ACRS Subcommittee met in March of 2009

1 and the Full Committee met In September of 2009 to
2 review the license renewal application and the SER.
3 And hearings are ongoing before our ASLB. Thirteen of
4 sixteen admitted contentions have been settled,
5 resolved or appealed. Hearings for the remaining
6 three contentions that we call Track 2 hearings are
7 actually going to occur in November of this year.
8 I'd like to address Indian Point 2 first.
9 Commitments which include inspections due before
10 entering the PEO were completed as required. The
11 project team basically had identified all the
12 commitments that we needed to implement. We developed
13 a work-down curve, we looked at what the plant -- how
14 the schedule was the refuel -- where refuel outages were
15 located, and we prepared the work orders and
16 implemented those. Subsequent aging management
17 activities were scheduled and completed as IP2
18 continues through the PEO.
19 So, we did the work that we needed to do
20 prior to entering the PEO and we continue to meet our
21 commitments. And they're tracked actually daily to
22 make sure that there isn't anything that goes awry.
23 And if it does, it immediately gets to my attention.
24 It also comes to the attention of our plant manager and
25 site vice president as necessary. But I can tell you

1 that that hasn't had to happen because the plant staff
2 recognizes the importance of implementing those
3 commitments in a timely fashion.
4 The Aging Management Programs are
5 described in the updated FSAR. We did make an FSAR
6 submittal prior to entering the PEO, which really
7 codified the commitments that we made to have the
8 renewed license. So Unit 2 is operating just as if it
9 has a renewed license. The commitments are hard fast,
10 and obviously the NRC can come in and look at that if
11 they want to.
12 MR. BARTON: Can I ask a question before
13 you continue?
14 MR. DACIMO: Sure.
15 MR. BARTON: Speaking about commitments,
16 at one time you had a Commitment 47. I think it had
17 to do with reactor internals. And somewhere between
18 the July 2013 NRC inspection report and the April 16th,
19 2015 transmittal of status report Commitment 47
20 disappeared from the commitment list. Does anybody
21 have an answer for that?
22 MR. DOLANSKY: Yes, we can address that,
23 Mr. Barton.
24 MR. BARTON: It was deleted and I don't
25 know why.

1 MR. DOLANSKY: Mr. Barton, we can address
2 that.
3 MR. DACIMO: This is Bob Dolansky.
4 MR. DOLANSKY: I'm sorry. Bob Dolansky.
5 I'm the owner of the Reactor Vessel Internals Program.
6 Commitment 47 had to do with the functionality analysis
7 of the lower support column bodies. We did a lot of
8 work on the lower support column bodies. We determined
9 the delta. We got all the original CMTRs for the lower
10 support column bodies. We determined that radiography
11 had been performed on the lower support column bodies.
12 And as a result of that, we found that the delta ferrite
13 content was very low on the lower support column bodies,
14 therefore there was no concern with thermal
15 embrittlement on those.
16 So Commitment 47 dealt with the
17 synergistic effect of irradiation embrittlement and
18 thermal embrittlement. That was not an issue for us
19 because of the very low delta ferrite content.
20 Therefore, we deleted Commitment 47.
21 MR. BARTON: Okay. I just didn't see any
22 correspondence between you and the staff.
23 MR. DOLANSKY: No.
24 MR. BARTON: It just disappeared off the
25 list.

1 MR. DOLANSKY: No, it was contained in an
2 RAI. In the RAI we said that we were deleting
3 Commitment 47.
4 MEMBER BALLINGER: And you verified the
5 molybdenum content and stuff like that with the CMTRs?
6 MR. DOLANSKY: We calculated the hull=s
7 fractions, I believe is what we actually did.
8 MR. AZEVEDO: Yes, I'm Nelson Azevedo, All
9 our materials are either CF8 or CF3. We don't have
10 CF8Ms or CF3Ms. So we had the low moly.
11 MR. DOLANSKY: Excuse me. Bob Dolansky
12 again. The lower support column bodies are CF8.
13 MR. AZEVEDO: Right, we don't have CF8M.
14 That's the high moly.
15 DR. SHACK: What was your ferrite level?
16 MR. DOLANSKY: Unit 2 the highest was 14,
17 and Unit 3 the highest was approximately 12. There's
18 some variation, but the highest numbers were 14 for Unit
19 3 -- or for Unit 2 and 12 for Unit 2 -- or 12 for Unit
20 3. I'm sorry. And that was docketed to the staff in
21 an RAI response.
22 MR. DACIMO: Yes, that's an illustration
23 of -- I think that case is an interesting illustration
24 of why it's necessary to have these original
25 construction records and going back, because

1 Westinghouse working with our people in house did
2 retrieve all those original test reports, and obviously
3 it was very helpful for us.
4 Indian Point Unit 3 commitments --
5 CHAIRMAN SKILLMAN: Let's go back.
6 MR. DACIMO: Sure. Absolutely.
7 CHAIRMAN SKILLMAN: In our reading
8 material there is the aux feedwater, IP2 aux feedwater
9 pump room fire event. And addressing this fire event
10 requires use of Indian Point 1 components. And my
11 question is what the quality classification of the
12 components that are relied upon for the current license
13 basis of Indian Point 2 as it reflects back on the Unit
14 1 equipment? In short, that's old, old equipment. Is
15 the quality classification what it needs to be to
16 support Indian Point 2 for this accident analysis?
17 MR. DACIMO: You want to say something,
18 Alan?
19 MR. COX: Sure. This is Alan Cox with
20 Entergy. Of course the reason the IP1 stuff is in there
21 to support the aux feed pump room fire event is to meet
22 the A3 criteria in the rule. So it doesn't -- that sort
23 of involves safety-related equipment. The equipment
24 that's involved is condensate storage tanks. That's
25 probably the biggest thing on IP1. And those are used

1 as a source of makeup and they're under the Tank
2 Inspection Programs. So they're not safety-related as
3 far as quality class, but they are the typical equipment
4 and materials that's in a power plant in that
5 application for condensate storage and they are in
6 Aging Management Programs to ensure that an acceptable
7 level of quality is maintained going forward.
8 CHAIRMAN SKILLMAN: Thank you.
9 MR. BARTON: I have still a question on
10 that. Apparently there was correspondence between you
11 and the NRC staff, and then you committed to install
12 a fixed automatic fire suppression system in that room.
13 Did that eliminate the need for this Unit 1 connection?
14 MR. COX: That would have eliminated the
15 need. At the point that commitment was made, there was
16 a lot of work that we would have had to do otherwise
17 to do individual component evaluations, come up with
18 Aging Management Programs for all the unit -- all the
19 secondary site equipment that was used to support that
20 event. The commitment was going to eliminate that.
21 Because the commitment was future activity, I think the
22 staff was unable to accept that commitment to deal with
23 the current licensing basis. So we were going to have
24 to do the evaluations to do the aging management reviews
25 and to establish the programs. We were going to have

1 to do both. So we're going to do the evaluations,
2 assigning Aging Management Programs to all the
3 secondary site components. And doing that we no longer
4 needed the fire suppression system, so we retracted
5 that commitment.
6 MR. BARTON: This was only because --
7 MEMBER STETKAR: Is it better to let the
8 room burn than to install the fire protection stuff?
9 MR. BARTON: That doesn't make sense.
10 MEMBER STETKAR: No, it doesn't from an
11 engineering sense, but this is not engineering.
12 MR. COX: Well, again we're not planning
13 to let the room burn, but, yes, the fire loading in the
14 room is very low. The equipment -- the activity to use
15 the secondary site to continue to feed water to the
16 steam generator was already proceduralized. It was an
17 accepted approach.
18 MR. DACIMO: Additionally, the site has a
19 trained fire brigade. Okay? We drill on a regular
20 basis.
21 MEMBER STETKAR: As does everyone.
22 MR. DACIMO: Okay. Right. Right.
23 MEMBER STETKAR: When you do the risk
24 assessment and you identify a risk significant location
25 for fires and you have an ability to install a

1 suppression system, it seems prudent to not challenge
2 the plant fire brigade.
3 MR. DACIMO: My point is the plant fire
4 brigade is there.
5 MEMBER STETKAR: As every plant has a
6 plant fire brigade. So you're no different, no better,
7 no worse than any other plant in that regard.
8 MR. BARTON: I thought the whole issue was
9 here you had to go through this exercise because you
10 weren't sure you could get people in there in that room
11 within an hour to suppress the fire. I thought that's
12 why this whole thing ended up the way it is.
13 MR. COX: That's correct. And we take
14 credit for other equipment in the secondary plant of
15 the unit to provide that feedwater flow without having
16 access to that room.
17 MR. BARTON: And what's that got to do with
18 the fire brigade being able to respond quickly? I'm
19 lost here.
20 MEMBER STETKAR: It doesn't. They give
21 up on the room, basically. Under the current licensing
22 basis they give up on the room and provide an alternate
23 way of feeding the steam generators, which --
24 MR. BARTON: Why is --
25 CHAIRMAN SKILLMAN: -- is fine.

1 (Simultaneous speaking)

2 MR. BARTON: -- Unit 3? Are these plants

3 pretty similar?

4 MR. DACIMO: A little different. Unit 3

5 does have a fixed fire suppression system associated

6 with .

7 MR. BARTON: Okay.

8 CHAIRMAN SKILLMAN: Okay. So why should

9 we conclude that this situation is satisfactory?

10 What's the punch line from your perspective?

11 MR. DACIMO: Well, when we look at it, when

12 we look at the risk assessment and you look at what the

13 rules require, certainly we are enveloped by what the

14 rules require. Okay? And that's not to say -- you

15 know, and I think that this discussion, while it is a

16 very interesting discussion, number one, the fire

17 loading int he room is very low. Number two, there are

18 regular rounds by a non-licensed operator that goes to

19 that room on a fairly short periodicity to make sure

20 that the plant is safe. Okay? Number three, we have

21 compensatory ways of dealing with the issue.

22 So when we look at it, it's certainly

23 enveloped by the rules and it certainly is something

24 -- it is an area that's closely monitored.

25 MR. BARTON: Okay. So we're still using

1 Unit 1 equipment, which was your question. My question
2 is what kind of maintenance program is on this Unit 1
3 piping, pumps, etcetera that you need in the vent of
4 this fire?
5 MR. DACIMO: So let's take a half-step
6 back and address the issue from this perspective: The
7 implication is that because it's Unit 1 equipment it's
8 very old and potentially not maintained or something
9 along those kind of lines. From our perspective what
10 we do, okay, is any equipment associated with the
11 operation of this facility, any equipment, whether it
12 be Unit 1, Unit 2, Unit 3, supplemental equipment, is
13 maintained in accordance with the plant programs. And
14 if something is necessary to support license renewal,
15 it has an Aging Management Program associated with it,
16 period, amen.
17 Additionally, even if it doesn't have an
18 Aging Management Program, we have Surveillance
19 Programs. We run fire pumps on a regular basis. Okay?
20 We test the system on a regular basis. We perform all
21 of these things associated with this facility on a level
22 of periodicity that certainly gives us a high level of
23 confidence that when necessary it's going to work. And
24 that is irrespective of what the age of the equipment
25 is or what unit was associated with it. And I think

1 that that should not be lost on anybody.

2 The other thing is this is looked at by the

3 NRC and this material is also viewed very closely when

4 we have our annual -- not annual, but when we have our

5 INPO evaluations. So to draw the conclusions that it's

6 Unit 1, it must be old and must be problematic, that's

7 a false assumption to start the discussion with.

8 CHAIRMAN SKILLMAN: Fred?

9 MR. DACIMO: Yes?

10 CHAIRMAN SKILLMAN: Thank you.

11 MR. COX: One other comment to add to what

12 Fred said. Most of the equipment that we're talking

13 about here is Unit 2 equipment that's required to

14 support power operations. So if you're operating the

15 plant at 100 percent power, you're basically proving

16 on a continuing basis that all this equipment is

17 functional and will be there to support this event

18 because you're using the same equipment that you have

19 to have to be able to generate power.

20 CHAIRMAN SKILLMAN: Thank you.

21 MR. DACIMO: If my answers get

22 long-winded, tell me.

23 CHAIRMAN SKILLMAN: No, I understand the

24 answer.

25 MR. BARTON: As long as you answer my

1 questions, it's okay.

2 (Laughter)

3 CHAIRMAN SKILLMAN: And I understand the

4 passion, too.

5 MR. DACIMO: Absolutely.

6 CHAIRMAN SKILLMAN: And just because it's

7 Unit 1, at least in my mind, it doesn't mean it's moldy,

8 oldy, broken and falling apart. If it's being taken

9 care of, if it's respected, if it's in your Aging

10 Management Programs, it's being tested, it's being

11 certified as good to go on a regular basis, if it's being

12 surveyed, fine. And you've just stated that on the

13 record.

14 MR. DACIMO: Okay. Thank you.

15 CHAIRMAN SKILLMAN: So we got that.

16 Thanks.

17 MR. DACIMO: And we feel very good about

18 that and you're going to hear more about that as this

19 presentation unfolds.

20 CHAIRMAN SKILLMAN: Okay.

21 MR. DACIMO: Addressing Indian Point 3,

22 commitments which include inspections due before

23 entering the period of extended operation are either

24 completed or scheduled to be completed before December

25 12th, 2015. Internally we have a target date where all

1 our inspections will be done by July.

2 Again, as I mentioned on Unit 2 we have a

3 work-down curve. Each one of the surveillances, each

4 one of the inspections have all been scheduled, and any

5 deviations from that immediately get attention of

6 leadership and we address it in short order.

7 The inspections that were required for the

8 plant to be shut down are done. We completed that.

9 During the last refuel outage which I mentioned the

10 plant conducted we completed all of the inspections

11 that we needed to complete prior to the unit starting

12 up, going to mode 1.

13 Subsequent aging management activities

14 will be scheduled and completed as IP3 continues into

15 the PEO. And we actually know specific dates, specific

16 inspections. We also know who's going to conduct those

17 inspections, and the work orders are completed.

18 Our Aging Management Program descriptions

19 will be included in the updated FSAR before entering

20 the PEO. We plan on addressing Unit 3 exactly the way

21 we addressed Unit 2, that all of our commitments will

22 be codified with the NRC through an FSAR update. So

23 when the NRC comes in and reviews this, it has

24 regulatory significance.

25 MEMBER STETKAR: Fred?

1 MR. DACIMO: Yes.

2 MEMBER STETKAR: Have you had any of the

3 commitment inspections for Unit 3 yet? I may be

4 jumping ahead.

5 MR. DACIMO: We had some initial looks.

6 I'd have to defer to Charlie.

7 MEMBER STETKAR: I can ask --

8 (Simultaneous speaking)

9 MR. DACIMO: Okay. Yes.

10 MEMBER STETKAR: Thanks.

11 MR. DACIMO: Okay. Absolutely. But to

12 date we haven't had any issues of significance with the

13 NRC. And anything the NRC has brought up, obviously

14 we'll address them. Okay?

15 Okay. We'd like to address License

16 Commitment 19, the One-Time Inspection Program, which

17 is required to be completed prior to entering the PEO.

18 On Unit 2 we performed one-time inspections for 437

19 examples. The inspections verified that unacceptable

20 degradation is not occurring.

21 Now, I'd like to just take a half-step back

22 and basically say that our samples -- we try to choose

23 samples that we think -- I like to use the term and our

24 team likes to use the term -- we call them smart samples.

25 So if we think there's something that's a problems,

1 that's where we try to look. We don't necessarily pick
2 out something that may necessarily be in a low-dose area
3 or may not necessarily reflect what we think might be
4 the severest duty that -- those components of that class
5 would see. So we choose some odd samples. The
6 inspections also verified the effectiveness of the IP2
7 Water Chemistry Control Program, our Oil Analysis and
8 Diesel Fuel Oil Monitoring Programs, etcetera, to
9 manage the effects of aging during the IP2 period of
10 extended operation.
11 MEMBER BALLINGER: I have a question about
12 the sampling.
13 MR. DACIMO: Sure.
14 MEMBER BALLINGER: You say you choose
15 sample where you think you're going to have an issue
16 instead of random sample.
17 MR. DACIMO: Well, we do both. Okay?
18 MEMBER BALLINGER: Okay. That was my
19 question.
20 MR. DACIMO: Yes, we do both. Okay?
21 Yes.
22 MEMBER BALLINGER: You do a distribution
23 where you think you're going to get difficulty, but
24 because there's lack of knowledge in general in some
25 cases --

1 MR. DACIMO: Right.

2 MEMBER BALLINGER: -- you also choose a

3 random sample. And how do you decide the size of the

4 random sample?

5 MR. DACIMO: Yes, we -- Alan?

6 MR. COX: Yes, I think we use -- we divided

7 the components up into material and environment groups

8 and we use either a -- I'm going to say 20 percent or

9 a maximum of 25 components. That's based on a

10 statistical approach. It's supposed to give us a 95

11 percent confidence level.

12 MEMBER BALLINGER: That's for the random

13 sample?

14 MR. DACIMO: So that's really 95 percent.

15 Okay?

16 MEMBER BALLINGER: Close enough.

17 PARTICIPANT: That's about 90 percent,

18 but that's okay.

19 MEMBER BALLINGER: Close enough.

20 (Laughter)

21 PARTICIPANT: Between 90 and 95, right.

22 MR. DACIMO: Okay? IP3, 324 one-time

23 inspections are required. Two hundred and

24 ninety-seven OTIs have been performed. We had one

25 observation. All 27 one-time inspections scheduled to

be performed during the refuel outage were completed with one observation.

MEMBER STETKAR: One observation, meaning you had a --

MR. DACIMO: We knew that was coming. Okay? Want to discuss that one observation?

MEMBER STETKAR: We would like --

(Simultaneous speaking)

MR. DACIMO: Absolutely right. Exactly right. Okay. Here we go. Watch your step up here.

MEMBER STETKAR: Identify yourself then.

MR. GUGLIELMINO: Good morning. I'm Peter Guglielmino. I'm a consultant in charge of the implementation effort at Indian Point 2 and 3. And these were station air valves near containment penetration. There were two valves on Unit 2 and two valves on Unit 3. We looked at all four valves. Out of the four one valve had some localized corrosion at the interface between the valve and the pipe. And we put that into our condition report system which evaluates it for operability, evaluates it for reportability, develops an action plan. And in this particular case there are no operability issues. The action plan is to look at this valve again at the next outage, which is 2017.

1 MEMBER STETKAR: It's been a while since
2 I looked at this, so you have to educate me. What does
3 a One-Time Inspection Program do in terms of increasing
4 the sample size when you find, as you call it, an
5 observation? Did you do that in this -- I mean, you
6 said you inspected these four particular valves, but
7 I'm suspecting that the corrosion didn't necessarily
8 care what valve it was or what piece of pipe it was.
9 MR. GUGLIELMINO: These particular valves
10 were actually valves that were made as commitments in
11 our Appendix B submittal. They were identified
12 because of OE on these valves as far as condensation
13 impact. And the corrosion was on the inside of the
14 -- these two valves are normally closed. And so, we
15 did all four of them, basically.
16 DR. SHACK: But do you have other valves
17 of the same material and environmental condition that
18 you could look at?
19 MR. GUGLIELMINO: We have looked at other
20 valves. If you look at our --
21 DR. SHACK: Was there a formal expansion
22 from the one to the --
23 MR. DACIMO: Our Corrective Action
24 Program requires that. Okay? What happens is
25 generically -- and this will be on anything any time

1 you find a deviating condition. In this case we chose
2 the words carefully, observation, because -- well,
3 there was not an operability issue. Okay? And I think
4 that's important because, hey, we're going to call it
5 as we see it. In other words, had that valve had a
6 through-wall leak, we would have said it was
7 inoperable. We would have said it was a deficiency.
8 And so, in this particular case where we did have this
9 observation -- I just want to get my point across. Had
10 we found an issue, we would call it what it is. In this
11 case it is an observation.
12 Now, our Corrective Action Program, we
13 write a deficiency document. And when we write that
14 deficiency document, it then goes to our engineering
15 organization. Our engineering organization looks at
16 it and the first thing they do is, okay, what's going
17 on here? Do we understand what the cause of the problem
18 is?
19 If we understand the cause of the problem,
20 or even if we necessarily don't understand what the
21 cause of the problem is, do we have to do a scope
22 expansion? Does the scope expansion that we do -- is
23 this considered to be -- will give us a level of
24 confidence that we've bounded this issue? Is there any
25 industry OE that we can learn from? Because that's

1 very important.

2 One of the things that we consider is -- and

3 when we talked about smart samples before -- is industry

4 OE helps us quite a bit from the perspective of putting

5 our eyes in the right direction and letting us deal with

6 things in a proactive rather than a reactive fashion.

7 Okay?

8 And then what we do is we formally track

9 with the program when is the next time you're going to

10 look at it, who's going to look at it, when is it going

11 to be done, etcetera? I'm sorry if I --

12 MEMBER STETKAR: Oh, no, that's fine.

13 MR. DACIMO: Okay.

14 MEMBER STETKAR: It's important to get

15 -- I tend to interrupt people, so --

16 MR. DACIMO: Okay.

17 MEMBER STETKAR: -- it's good that you

18 pushed through. Let me follow up on this. I

19 understand the Corrective Action Program.

20 MR. DACIMO: Okay.

21 MEMBER STETKAR: And that applies to any

22 type of problem that you might find in a plant, whether

23 it's a passive piece of equipment subject to aging

24 management or whether it's an active piece of

25 equipment. A motor-operated valve doesn't open,

1 something like that.

2 What I'm asking about is in the context of

3 the One-Time Inspection Program for the specific

4 purposes of license renewal you do this smart sampling.

5 You select a set of equipment out of the scope of the

6 plant. You say we're going to go look and see if we

7 might have issues here, I'll call them. Not

8 operability because current licensing basis will

9 handle that if you find an operability issue. But you

10 found some corrosion.

11 Now, the question is what part of the

12 One-Time Inspection Program -- forget the corrective

13 action for that particular configuration, that

14 particular set of valves. What part of the One-Time

15 Inspection Program does that require an increased

16 sample size where you say, hey, we found this corrosion

17 for this particular material in an area that may be

18 subject to condensation. Should we increase our smart

19 sample size? Should we go look for other places where

20 we might have that same combination of materials and

21 condensation? And does the program require that? And

22 if so, did you do that?

23 MR. COX: I think the program -- this is

24 Alan Cox again.

25 MEMBER STETKAR: The one-time inspection.

1 MR. COX: One-Time Inspection Program is
2 -- of course is based on the program in the GALL Report.
3 I don't believe there are any provisions to
4 specifically address sample inspection. I believe it
5 relies on identifying these things in the Corrective
6 Action Program, which is what Fred described. And then
7 the Corrective Action Program would evaluate the
8 specifics of the condition and determine if there is
9 a need for expanding the sample size, because they would
10 look at do you have this same situation somewhere else
11 and need to expand the sample?
12 MEMBER STETKAR: Yes, I understood.
13 What's --
14 (Simultaneous speaking)
15 MR. COX: I don't know what --
16 (Simultaneous speaking)
17 MEMBER STETKAR: -- the Corrective Action
18 Program? I understand how that works, but --
19 MR. COX: But there's nothing
20 specifically in the --
21 MEMBER STETKAR: Okay. That helps me.
22 MR. COX: -- One-Time Inspection
23 Program --
24 (Simultaneous speaking)
25 MEMBER STETKAR: I'll ask the staff about

1 that when they come up, because --

2 (Simultaneous speaking)

3 MR. DACIMO: -- look at it though. And I

4 just want to make our position clear. And I got to tell

5 you, I suspect that most other people that you'd speak

6 to in the industry would probably tell you the same

7 thing, but I'm not going to go there. Okay?

8 MEMBER STETKAR: On, they're not --

9 (Simultaneous speaking)

10 MR. DACIMO: Right. Exactly. Right.

11 But the Corrective Action Program really umbrellas

12 everything. I want to make sure you understand that.

13 Okay? So you can discuss it in terms of the One-Time

14 Inspection Program, but it's equally applicable as

15 anything else you may have at the facility, whether it's

16 safety-related, important to safety, non-safety. We

17 write on the order of 7,000 to 9,000 corrective action

18 documents a year. And so, the breadth and scope of the

19 Corrective Action Program is actually quite broad.

20 And that is intentional. Okay? To have people

21 identify what the issues are in the facility, give them

22 the look that they deserve and determine if you need

23 to come up with a corrective action to prevent

24 reoccurrence, which is I think what you're driving at.

25 We do not want to have repeat issues.

1 The other thing that's very important; and
2 at the risk of being repetitive, is the utilization of
3 industry OE. What I found in my 40 years in the
4 industry is that there are very few times when something
5 happens we're the first that it's happened to. As a
6 matter of fact, usually when I hear that, I get very
7 suspicious; and I can speak for Larry, because I know
8 -- oh, this is the first time we ever saw that. You're
9 kind of like, okay, right. You know? Let's go take
10 a look around.
11 And so, what happens is your Corrective
12 Action Program helps you quite a bit because you take
13 a look at what's out there and you are able to avoid
14 problems.
15 MEMBER REMPE: So let's go a little bit --
16 MEMBER STETKAR: Let Ron go first.
17 MEMBER BALLINGER: To close his question
18 out --
19 MR. DACIMO: Absolutely.
20 MEMBER BALLINGER: -- I thought he was
21 going to finish it, but he didn't, this valve corrosion
22 issue, was that part of the Smart Program or part of
23 the random sampling?
24 MR. DACIMO: I couldn't tell you.
25 MR. GUGLIELMINO: No, it's not a random

1 sample.

2 MEMBER BALLINGER: And so you --

3 (Simultaneous speaking)

4 MR. GUGLIELMINO: -- OE.

5 MEMBER BALLINGER: It was part of the

6 Smart Program? It wasn't found as part of the

7 random --

8 MR. GUGLIELMINO: Right.

9 MEMBER BALLINGER: Okay.

10 MR. DACIMO: Yes.

11 MEMBER REMPE: So you found localized

12 corrosion between the valve and the pipe at one out of

13 four locations and then you did put it in your

14 Corrective Action Program and you may have had an

15 expanded inspection. Did you find it anywhere else?

16 MR. GUGLIELMINO: No.

17 MEMBER REMPE: And what was the cause that

18 it only occurred at the one place?

19 MR. GUGLIELMINO: The valve actually was

20 -- the other three valves were stainless steel. They

21 have been changed to stainless steel valves. And this

22 particular valve, which is the fourth valve, was made

23 of bronze. And it's the interface of the bronze alloy

24 to the carbon steel piping.

25 MEMBER REMPE: Okay. And so, the

1 Corrective Action Program would have looked for other
2 locations where something had not been changed to
3 stainless steel and there were no other locations, and
4 that's why there's one occurrence occurred?
5 MR. GUGLIELMINO: Right. Of the four
6 this is the only one that --
7 (Simultaneous speaking)
8 MR. DACIMO: And in this particular case
9 I believe; and you need to correct me if I'm wrong, the
10 decision was not made to change it to stainless. We
11 felt it was acceptable. And we may change it to
12 stainless downstream when you have a valve or when you
13 can schedule it at some point. This is perfectly
14 acceptable.
15 MR. GUGLIELMINO: Correct.
16 MEMBER STETKAR: I have to be careful,
17 because what I hear is the gentleman at the microphone
18 said of the four this was the only one, which tells me
19 those are the only ones you're looking at. We're
20 saying did you go out and look at a whole bunch of other
21 pipe that's been scoped for license renewal?
22 PARTICIPANT: Yes, bronze connected to --
23 (Simultaneous speaking)
24 MEMBER STETKAR: Bronze connected to
25 carbon steel. Forget the fact that it's service air.

1 Forget the fact that OE on those particular valves
2 pointed you to that location. Did you go out and look
3 for other materials?
4 MEMBER SCHULTZ: Given that this is the
5 one observation you had in the 297 that went into the
6 Corrective Action Program, I would have thought it
7 would have gotten a lot of attention.
8 MR. DACIMO: It did. Yes.
9 MEMBER SCHULTZ: And we haven't heard what
10 the follow-up has been from --
11 (Simultaneous speaking)
12 MEMBER STETKAR: Other than looking at
13 that one of four.
14 MEMBER SCHULTZ: Extent of condition.
15 That's what we're interested in. What was looked at
16 with regard to that?
17 MR. GUGLIELMINO: The extent of condition
18 at the moment is to look at it again in the next outage.
19 MEMBER STETKAR: But "it" -- see, you're
20 saying "it."
21 MR. GUGLIELMINO: No, we're talking
22 about --
23 MEMBER STETKAR: We're saying "others."
24 MR. GUGLIELMINO: We've looked at other
25 valves in a similar situation, but we have not found

1 any valves that are copper alloy attached to carbon
2 steel piping. It's not part of our sample. We have
3 a complete separate sample that includes station air
4 and it includes components within the station air
5 system that are being inspected. Those are random
6 samples. When I stated four, it's because we
7 specifically mentioned these four valves, and that's
8 why I keep on describing them as those particular
9 valves. In our Appendix B submittal as a line item for
10 inspection these valves were specifically pointed out
11 to be inspected for condensation. And so, this was
12 satisfying a requirement in our submittal.
13 In addition to that, we do have a random
14 sample. We do have where we take 20 percent of the
15 total population and look for barriers. And we do have
16 copper alloy in the same condition that we've looked
17 at, but we have not found --
18 (Simultaneous speaking)
19 MR. DACIMO: And let me put a finer point
20 on it. Okay? This is also a work in progress. The
21 outage just ended 30 days. You did not have an
22 immediate operability issue. Okay?
23 MEMBER STETKAR: No.
24 MR. DACIMO: Well, yes, but I want to
25 address the point though. We did not have an immediate

1 operability issue. This valve had been there for quite
2 a period of time. So what we're doing is we're looking
3 at this. We're seeing, hey, is there anything else
4 that we want to do as a result of that? And frankly,
5 that takes time to do that. Thirty days ago was when
6 the outage was completed. And so, when you write as
7 many corrective action documents as we do -- this is
8 not something that the house is on fire, so to speak,
9 okay, which requires an immediate response.
10 MEMBER STETKAR: No. And again, and I'm
11 not pressing for the final resolution of this. I
12 prefaced this by trying to understand how the One-Time
13 Inspection Program operates if you do observe
14 something.
15 MR. DACIMO: Yes.
16 MR. COX: Let me --
17 MEMBER STETKAR: Do you increase samples?
18 Do you --
19 MR. COX: Let me add a little
20 clarification. Peter's talking about two different
21 things. The One-Time Inspection Program has really
22 two aspects. One would be the random sampling that we
23 use to verify effectiveness of the Chemistry Program.
24 In addition we have one-time inspection activities,
25 which this is an example of that, where we have a

1 specific material/environment combination. In this
2 case it was the valve and the condensation environment.
3 And we looked at the whole population. In other words,
4 we may assign a one-time inspection to this where we
5 really don't expect to see an aging effect, but we're
6 going to check it anyway. And there's not another
7 program that deals with that, so we have a few cases;
8 and this being one of them, where you look specifically
9 at a component as opposed to a sample of a population.
10 MEMBER BALLINGER: Well, can you tell us
11 what type of corrosion was observed? You say
12 "localized corrosion." Was it selective leaching?
13 MR. DACIMO: We're going to talk about
14 that in a minute. We're going to talk about selective
15 leaching in a minute. Matter of fact, that's the next
16 issue.
17 MEMBER BALLINGER: Okay.
18 MEMBER SCHULTZ: Respecting where you are
19 in the process, with this has gone to the Corrective
20 Action Program -- and I just would like to reemphasize
21 that what we would expect to have happen is that the
22 Corrective Action Program would look at extent of
23 condition, would look at this incident as part of that
24 program and look beyond what the corrective action is
25 for this valve, or for any of those in that set in the

other program called One-Time Inspection and look for other opportunity for plant improvements --

(Simultaneous speaking)

MR. DACIMO: Yes, it does. It does, and I will --

MEMBER SCHULTZ: You're a month into that, and I'm presuming the corrective action item is still open --

MR. DACIMO: Right.

MEMBER SCHULTZ: -- focused on --

MR. DACIMO: And the Corrective Action Program may drive program changes. Okay? If that's what you're asking.

MEMBER SCHULTZ: We're not asking for that to happen.

MR. DACIMO: Right.

MEMBER SCHULTZ: We understand what the program is for the one-time inspection. We're rather looking to see what action the site is going to take related to the general issue that was identified by this find.

MR. DACIMO: Right.

Okay. Selective leaching. Commitment 23. We performed selective leaching inspections for 46 samples. There was no evidence of selective

leaching for either gray cast iron or copper allow materials on Unit 2. We did do some destructive testing analysis for seven samples: 2 copper alloy and 5 cast iron valves. The results of the laboratory analysis did reveal some graphitization in four of the five cast iron samples with no loss of function occurring. So we did observe when we actually did destructive testing.

We have developed a new ongoing IPEC Selective Leaching Management Program and established the program implementation requirements for the identification, monitoring, trending, repair and replacement components susceptible to selective leaching. So as a result of our observations this is an illustration where we made a program change, which is I think exactly what we were talking about a minute ago. Okay? So that's kind of where we're at.

MEMBER STETKAR: Just out of curiosity, what systems were those in, fire --

MR. DACIMO: Fire protection, yes. Absolutely, yes.

MEMBER STETKAR: Thanks.

MEMBER BALLINGER: Now, what is your definition of "no loss of function?" Because when you get selective leaching or graphitization, the

1 shape is still there --

2 MR. DACIMO: Yes.

3 MEMBER BALLINGER: -- it looks good, but

4 if you hit it with a hammer, it's not good. It will

5 still function, but if you have an impact load or

6 something like that, that's when you start to get into

7 trouble. So what do you mean by now loss of function?

8 MR. DACIMO: We believe those valves will

9 remain operable if they were called into service.

10 MEMBER BALLINGER: So they'll stay in one

11 piece? They won't --

12 MR. DACIMO: Yes. Right.

13 MEMBER BALLINGER: Okay.

14 MR. DACIMO: And when you section the

15 valves, which we actually did, and then etch them, you

16 could kind of see it, okay, the amount of

17 graphitization. It was an interesting thing to look

18 at. As a result of that, we'll be working through the

19 Corrective Action Program on this to do valve

20 -- additional samples of valve change-outs, and we may

21 even get into valve change-outs on a proactive basis

22 with some sort of -- and I'm going a little far, but

23 maybe some service life issues.

24 MEMBER BALLINGER: Now well this also may

25 cross over into the issue of the cathodic protection

1 system where if you get stray current you can aggravate
2 this. Have you guys made a connection between that or
3 looked to see if there's any connection between
4 possible stray current issues with the Cathodic
5 Protection Program and the fire water system?
6 MR. DACIMO: We're actually going to
7 address that downstream. Okay? On Unit 3 we have 22
8 selective leaching samples required. Seventeen
9 inspections were performed with no findings. The rest
10 of the 22 will be completed prior to end of July.
11 DR. SHACK: Just to interrupt, going back
12 to the 2009 license renewal, one of the issues there
13 was the cumulative usage factor and the
14 environmentally-enhanced fatigue. And you had a
15 Commitment 33, which has been completed, but what did
16 you find for -- how did you deal with that and what did
17 you find when you did it?
18 MR. DACIMO: Nelson Azevedo?
19 MR. AZEVEDO: Yes, my name is Nelson
20 Azevedo. I believe Commitment 33 dealt with reviewing
21 the NUREG-6260 locations in applying the environmental
22 effects. I believe that's what it did. We did
23 complete that. Westinghouse reviewed all the CUFs
24 that we had for those locations in 6260. And we did
25 incorporate the FENs, the environmental effects. In

1 some locations we didn't have CUFs because they were
2 designed under P31-1, and we developed new CUFs for
3 those locations and then we applied the environmental
4 effects.
5 DR. SHACK: CUFs with the environmental
6 factors remain under one?
7 MR. AZEVEDO: Yes, they do.
8 MR. DACIMO: So, you had a digital answer,
9 right?
10 (Laughter)
11 DR. SHACK: That was accurate.
12 MR. DACIMO: Okay. Thank you. We try.
13 We wanted to give you a feel for the kind
14 of major plant mods since the last ACRS meeting. We
15 have a pretty robust Capital Improvement Program at
16 Indian Point, and we've made over 1,000 modifications
17 that have cost nearly $600 million for both regulatory
18 reasons, safety reasons, reliability reasons, security
19 reasons, etcetera. And my plan is not to go through
20 every mod, but at least to just give you a flavor of
21 the kind of things that we're doing to keep the plant
22 in good shape and make sure that it's going to operate
23 safely and reliability on a going-forward basis.
24 You can see in 2010 we did vortex
25 suppressions. We replaced transformers, installed a

1 cathodic protection system on the CST. And we're going
2 to get to that in a couple minutes more specifically.
3 Spent fuel obviously. Wide-range level indication as
4 a result of Fukushima. We have FLEX equipment
5 installation and we also upgraded a storage building.
6 We have a work in progress to install FLEX electrical
7 connections.
8 We replaced split pins, which I believe
9 will be talked about later today. Vortex suppressors
10 again. Cathodic protection, plant process computer,
11 transformers, etcetera. And this is just --
12 MEMBER BANERJEE: Why did you need vortex
13 suppressors?
14 MR. DACIMO: I believe the -- Mr. Burroni,
15 you want to get into that?
16 MR. BURRONI: What was the question?
17 MR. DACIMO: Why you need vortex
18 suppressors?
19 MEMBER BANERJEE: Why did you need the
20 vortex suppressors?
21 MR. DRAKE: This is Rich Drake. This was
22 in -- the vortex suppressor, this was in conjunction
23 with a GSI-191 Program on screens. We installed vortex
24 suppressors in some tanks, but also above the recirc
25 sumps.

1 MR. DACIMO: The reason why though.
2 Okay?
3 MR. DRAKE: So you wouldn't get air
4 ingestion into the pump.
5 MEMBER BANERJEE: Was there something
6 that indicated that --
7 (Simultaneous speaking)
8 MR. DRAKE: It was part of the generic
9 issue on that. It was GSI --
10 (Simultaneous speaking)
11 MEMBER BANERJEE: Yes, I understand where
12 it was. I'm just wondering --
13 MR. DACIMO: Obviously we have never seen
14 that, but --
15 (Simultaneous speaking)
16 MEMBER STETKAR: For your benefit, this is
17 Mr. GSI-191. So he's --
18 (Laughter)
19 MEMBER BANERJEE: I was just wondering.
20 But, okay, it was needed. The staff --
21 (Simultaneous speaking)
22 MR. DRAKE: Yes, this was a follow-up,
23 another generic issue with air injection into pumps,
24 so we looked at tanks. We put some in there, but also
25 the sumps.

1 MEMBER RICCARDELLA: What's the status of
2 your program to address the -- reevaluate seismic
3 hazard at the site?
4 MR. DRAKE: This is Rich Drake. I could
5 answer that also. What we've done is we've looked into
6 -- we followed the whole guidance with the screening
7 process. We've generated new GMRS with the industry.
8 MEMBER RICCARDELLA: Yes, and as I
9 understand it, it's significantly higher than your SSE.
10 MR. DRAKE: Yes. And again, that's just
11 as a screening criteria, because one is deterministic,
12 one is probabilistic. And for both of them we're doing
13 a more detailed risk assessment for both Unit 2 and Unit
14 3. We started that. We've done the Interim ESEP
15 Program to evaluate the robustness of the FLEX
16 adjusters, and we're going to be doing high-frequency
17 spent fuel pool evaluations. We're working with the
18 industry on all those issues.
19 MEMBER RICCARDELLA: Thank you.
20 MR. DRAKE: We're scheduled to complete by
21 June of 2017.
22 MEMBER RICCARDELLA: Okay. Thank you.
23 MEMBER REMPE: Also, why did you need to
24 transfer spent fuel from Unit 2 to Unit 3?
25 MR. DACIMO: The way our site is designed;

1 and we look at -- we're moving the fuel into casks, like
2 most sites are. Okay? For us to rebuild an entire
3 cask handling system duplicated on Unit 3 it's much
4 easier for us to put in some shipping cask, move it over.
5 Okay?
6 MEMBER REMPE: Okay.
7 MR. DACIMO: Let's move on.
8 MEMBER STETKAR: Fred, you went through
9 the mods pretty quick.
10 MR. DACIMO: Yes, absolutely.
11 MEMBER STETKAR: And you mentioned
12 -- I was taking notes as the slides flashed by. You
13 replaced the guide tube split pins on Unit 3. The Unit
14 2 you're scheduled for next year, is that correct?
15 MR. DACIMO: Right. That's correct.
16 MEMBER STETKAR: Okay.
17 MR. DACIMO: Right.
18 MEMBER STETKAR: Thanks. I just wanted
19 to make sure.
20 MR. DACIMO: And Unit 2 was replaced. The
21 original split pins were replaced back --
22 MEMBER STETKAR: Oh, yes, a long time ago.
23 MR. DACIMO: -- in the early '90s, but we
24 replaced them with --
25 MEMBER STETKAR: But that's next year's

outage?

MR. DACIMO: That's correct.

MEMBER STETKAR: Okay. Thanks.

MEMBER BALLINGER: So the current ones are the modified X-750, right?

MR. DACIMO: Correct.

MEMBER BALLINGER: And then the new ones are going to be the cold-worked stainless steel?

MR. DACIMO: Correct.

You can see some of the things we did to the site. Built a new access point, new alarm station. We actually removed a significant portion of the Unit 1 stack. That was strictly a safety issue from the standpoint of two over one. And we rebuilt the Unit 1 screen house.

DR. SHACK: Just to go back again for --

MR. DACIMO: Sure.

DR. SHACK: -- and old issue, you had some leakage in the spent fuel pool.

MR. DACIMO: We address that.

DR. SHACK: You were going to put that coating on. Now you're going to do some acoustic emission testing.

MR. DACIMO: We can give you an update right now.

1 DR. SHACK: Well, just -- okay. I'm
2 curious. I mean, a slow drip doesn't sound like
3 something I'd use acoustic emission for. That just --
4 MR. DRAKE: Yes, actually -- this is Rich
5 Drake again. So, the issue was the difficulty of
6 trying to find the leak, so we -- because we were trying
7 -- my predecessors have also tried many times to stop
8 the leak. We used CeramAlloy coatings in wider areas
9 to try to stop it. But we couldn't find the exact
10 location, so we thought we had them and they tried. It
11 wasn't working.
12 So, we actually used the acoustic
13 monitoring, and actually it identified five locations
14 that -- and what we did in the last outage, we went and
15 repaired two of those locations that were identified.
16 We after the first two more severe ones. And that
17 stopped -- or it slowed down the leaking by over 50
18 percent. And we're scheduled to finish the other three
19 locations that were identified this outage.
20 DR. SHACK: And so, I mean, these are just
21 regular weld repairs at this point? No coatings or --
22 MR. DRAKE: No, the coating was not as
23 successful, so we're actually going to weld repairs,
24 things like that, or welding plates over the
25 indications we have.

1 MEMBER BALLINGER: Have you figured out
2 why?
3 MR. DRAKE: Why?
4 MEMBER BALLINGER: Yes.
5 MR. DRAKE: One location we believe when
6 -- it was at the interface of the head, the upper
7 internals head stand area. We believe back in '93 time
8 frame when we just first identified the leakage they
9 have set that down a little harder than they wanted and
10 it may have just cracked the interface there which
11 caused the leakage there. And the other ones were
12 porosity between plug welds. And when they came back
13 over it to smooth out the -- they may have removed too
14 much of the plug weld and caused a little leak. So most
15 of them are in plug weld areas.
16 MEMBER BALLINGER: So, you used the
17 acoustic emission to find -- you find the five?
18 MR. DRAKE: Yes.
19 MEMBER BALLINGER: Are you satisfied that
20 you don't have others?
21 MR. DRAKE: Well, yes, but like I said, the
22 first two we did significantly stopped it. We believe
23 these others will almost -- it may not stop it to like
24 zero, but it may get down to almost nothing. That's
25 our goal. If it doesn't, we have commitments then to

1 do more structural monitoring, core bores and exposed
2 rebar, which we've done also to prove that there's no
3 structural safety --
4 (Simultaneous speaking)
5 MR. DACIMO: Indian Point 1, just by the
6 way of background, provided an interesting, for lack
7 of a better term, test bed for -- right, and I hope you
8 can detect my sarcasm -- for spent fuel leakage, because
9 that was a concrete pit that had epoxy coating and was
10 leaking and it was into the groundwater. Entergy, when
11 we purchased the facility, made the decision on a
12 proactive basis to -- and the project managers in the
13 room -- to remove all the fuel from the Unit 1 spent
14 fuel pool, put it in casks, drain the pool and clean
15 it up. Doing that certainly helped us from the
16 standpoint of stopping any leaks associated with that
17 pool, but it also provided us the opportunity -- we did
18 core borings outside that pool and looked at rebar.
19 And that facility, being as old as it was,
20 gave us the opportunity to take a look at the rebar.
21 And we actually found that the rebar in that particular
22 case that was -- when we cored it out, was actually in
23 very good shape. So you didn't have what we would have
24 expected, through-wall leakage into the concrete
25 attacking the rebar. And the rebar was actually in

very good shape. So that helped us.

But in addition --

MR. DRAKE: We used that information because Unit 1 had 30 years -- because it was an unlined pool. So it had 30 years of borated water in contact with the concrete. And there we saw that except for like first half-inch of depth of the concrete there was really no deformation or damage to the concrete matrix.

But in Unit 2 what we did as part of our commitment for this issue, we removed sections of the liner, examined the concrete behind the liner, took core bores, exposed some rebar that was behind there, and that rebar looked as good as the day it went in.

MEMBER STETKAR: Just for the record, because you're bouncing back and forth on units --

MR. DRAKE: Yes.

MEMBER STETKAR: -- and you're bouncing back and forth on liners, the subject that we're talking about is the reactor cavity liner on Unit 2.

MR. DRAKE: Correct. The Unit 2 refueling --

MEMBER STETKAR: And on --

MR. DRAKE: -- cavity liner is the main issue.

MEMBER STETKAR: Yes. Okay.

1 MR. DRAKE: But we're using the experience
2 that we gained from Unit 1 and also the information that
3 we examined from a safety point of view --
4 MR. DACIMO: Let me explain the title,
5 John. I want to make sure it's perfectly clear.
6 MEMBER STETKAR: Let me just follow up on
7 a thought here. So you said you removed sections of
8 the liner and took core bores. You removed sections
9 of the Unit 2 refueling cavity liner and took core bores
10 of the concrete behind that liner?
11 MR. DACIMO: That is correct.
12 MEMBER STETKAR: Thank you.
13 MR. DACIMO: But we also did, which is
14 important I think in terms of an Aging Management
15 Program, was because of the age of Unit 1 we also core
16 bored at Unit 1 where there wasn't a stainless liner,
17 where you just had concrete that had an epoxy coating.
18 So that actually provided you with test bed for attack
19 of borated water on rebar. So that was fortuitous that
20 we had that because it just further built the case that
21 there weren't any safety issues or structural issues
22 associated with it. And I think that that's very
23 important.
24 MEMBER RICCARDELLA: And that was the
25 spent fuel pool?

1 MR. DACIMO: That's the spent fuel pool,
2 which again -- thanks for pointing that out, because
3 the point is that the spent fuel pool is full all the
4 time, whereas the refueling cavity is filled for about
5 two weeks every two years. Okay?
6 MR. BARTON: A question on that though,
7 while we're on that, jumping around here, you found some
8 defective welds in that Unit 2 --
9 MEMBER STETKAR: Let me --
10 MR. BARTON: Go ahead.
11 MEMBER STETKAR: Are you refueling cavity
12 or fuel pool?
13 MR. DACIMO: Yes, refueling cavity.
14 MEMBER STETKAR: Okay. As long as
15 refueling cavity, that's fine.
16 MR. BARTON: You were to repair some
17 defective wells during the 2014 refueling outage. Was
18 that work done?
19 MR. DACIMO: Yes, that's what we --
20 (Simultaneous speaking)
21 MR. DRAKE: Well, no, no. What we did is
22 we identified five locations. We've done two. We're
23 going to do the next three in the next outage.
24 MR. BARTON: Okay.
25 MR. DRAKE: And that's where we did get a

lot of that thing.

MEMBER STETKAR: Rich, I was looking back through my notes from before, and you had some estimates before about what the leakage rate was. And it varies, you know?

MR. DRAKE: Yes, yes.

MEMBER STETKAR: Did you get any kind of quantitative estimate after you made the weld repairs to see how much it dropped? You said it's significant.

MR. DRAKE: Yes, we said about 50 percent.

MEMBER STETKAR: About 50 percent? I missed that. Thanks.

MR. BARTON: They still have leakage, though.

MEMBER STETKAR: Oh, yes, because that's --

MR. DRAKE: We still have leakage. All the leakage is contained inside the containment sumps.

MEMBER STETKAR: Yes. Yes. Yes.

MR. DRAKE: It doesn't go anywhere else.

MEMBER STETKAR: Yes. Okay. Thank you.

MR. DRAKE: And all of that was within our makeup capability.

MR. BARTON: Wait a minute. I'm back on 14. How did you get to 16?

1 MR. DACIMO: Fourteen is the Indian Point
2 3. Fifteen is the site, which I thought I covered that.
3 MR. BARTON: I have a question on 15.
4 MR. DACIMO: Okay. Great.
5 MR. BARTON: All right.
6 MR. DACIMO: That's where we're at.
7 MR. BARTON: The Unit 1 Screenwell house.
8 Where is that located?
9 MR. DACIMO: On the Hudson River.
10 MR. BARTON: That's part of your intake?
11 MR. DACIMO: Yes, exactly. It's part of
12 the intake.
13 MR. BARTON: Now, I couldn't find anything
14 in my readings here where you addressed the intake
15 structure. And my question is the intake structure for
16 Units 2 and 3, is there any safety-related equipment
17 in that structure?
18 MR. DACIMO: Yes, there is. Service
19 water.
20 MR. BARTON: All right. Now is that in a
21 Routine Inspection Program? I couldn't find anything
22 you're doing at the intake on those two units.
23 MR. DACIMO: Yes, it is.
24 MR. DRAKE: Yes, the intake structures are
25 part of the Structural Monitoring Program. It's part

1 of the Maintenance Rule Program. It's part of the
2 Structures Monitoring Program. We look at it on a
3 periodic inspection per that program, but also daily
4 rounds by operations and the engineering staff.
5 MR. DACIMO: Yes, it's actually shiftly
6 rounds.
7 MR. BARTON: Let's jump to the discharge.
8 You had a history in a discharge canal and the out-fall
9 structure where you do periodic inspections, and you
10 apparently found some degraded conditions in a 2008
11 inspection that were not repaired. They were deemed
12 not to compromise intended functions. Have the
13 conditions at the discharge gotten worse, better? Are
14 you doing anything with them? Are you doing a periodic
15 inspection of the discharge canal areas?
16 MR. DRAKE: Again, they are under
17 operations shiftly manager. We did actually do
18 repairs to that discharge canal.
19 MR. BARTON: Okay. What I read was that
20 repairs were not -- conditions were identified, but
21 they weren't done.
22 MR. DRAKE: We did a major repair of the
23 discharge canal sheet piles, etcetera.
24 MR. DACIMO: Since that submittal we have
25 done that.

1 MR. BARTON: Okay. And as for now you're
2 doing routine inspections --
3 MR. DACIMO: That's right.
4 MR. BARTON: -- in some period of the
5 discharge?
6 MR. DACIMO: That's correct.
7 MR. BARTON: Thank you.
8 MR. DACIMO: Any other questions on mods
9 to the site?
10 MEMBER RICCARDELLA: Did you cover
11 cathodic protection?
12 MR. DACIMO: We're going to get to that.
13 MEMBER RICCARDELLA: Okay.
14 MR. DACIMO: Okay. Reactor Internals
15 Program. Bob Dolansky will cover that.
16 MR. DOLANSKY: Good morning again. My
17 name is Bob Dolansky. I'm the program owner for
18 Reactor Vessel Internals.
19 The NRC has reviewed and approved the IPEC
20 Reactor Vessel Internals Program, which is based on
21 MRP-227-A as documented in Supplement 2 to the Safety
22 Evaluation Report. The NRC review included the
23 detailed Reactor Vessel Internals Inspection Plan that
24 implements the elements of the Aging Management Program
25 and fulfills License Renewal Commitment 30.

1 Inspections of all MRP-227-A primary
2 components, including over 4,700 specific inspections,
3 are scheduled for spring of 2016 at IP2 and spring of
4 2019 at IP3.
5 Industry 227-A inspections performed to
6 date have found no issues with reactor vessel internals
7 other than isolated cracking of the baffle-to-former
8 bolts. As a result of that industry OE we are doing
9 a baffle bolt minimum pattern analysis to document that
10 if we get some small number of baffle bolts cracked that
11 were acceptable.
12 IP2 is planning on replacing the split pins
13 during the 2016 refueling outage with cold-work 316,
14 as we said, which is degradation-resistant. IP3
15 replaced our X-750 split pins in 2009 with cold-work
16 316 stainless steel.
17 Anybody have any questions on reactor
18 vessel internals? Yes, Dr. Riccardella?
19 MEMBER RICCARDELLA: Yes, baffle bolts,
20 the cracking you're referring, did you actually have
21 baffle bolt cracking, are you just referring to
22 industry OE?
23 MR. DOLANSKY: No, industry OE.
24 MEMBER RICCARDELLA: Got it.
25 MR. DOLANSKY: Yes, we have not had any.

1 MEMBER REMPE: So you agreed to enhance
2 your reactor vessel surveillance as part of this
3 effort. What exactly did you do to enhance it?
4 MR. DACIMO: Nelson Azevedo?
5 MR. AZEVEDO: My name is Nelson Azevedo.
6 I believe you're talking about the reactor vessel
7 surveillance on Appendix H of 10 CFR 50.
8 MEMBER REMPE: Right.
9 MR. AZEVEDO: Yes, for both units we
10 submitted a new capsule withdrawal schedule and both
11 of those have been approved by the NRC staff.
12 MEMBER REMPE: Just more frequently or
13 what --
14 (Simultaneous speaking)
15 MR. AZEVEDO: We've just followed ASTM
16 E185, the withdrawal schedule. So actually we had to
17 delay pulling the next capsule to make sure we had the
18 proper effluence to cover us at the end of the life.
19 MEMBER REMPE: Okay.
20 MR. AZEVEDO: But both of those schedules
21 have been approved and have been implemented.
22 MR. DACIMO: And just to clarify, that's
23 not part of the internals.
24 MEMBER REMPE: I'm sorry. Okay.
25 MR. DACIMO: That's a very good question,

1 but that's not the internals.

2 MEMBER REMPE: I was looking for a good

3 place to put it --

4 (Laughter)

5 MEMBER REMPE: -- slides, and it seemed a

6 good place to ask.

7 MEMBER RICCARDELLA: Nelson, you have

8 projected end of life. Shift is not a concern?

9 MR. AZEVEDO: What are you --

10 MEMBER RICCARDELLA: You know,

11 temperate --

12 MR. AZEVEDO: Well, it would --

13 (Simultaneous speaking)

14 MEMBER RICCARDELLA: -- shift.

15 MR. AZEVEDO: It's within -- for PTS or for

16 cool down periods?

17 (Simultaneous speaking)

18 (Laughter)

19 MR. AZEVEDO: Well, okay. So for Unit 2

20 we have PT limit curves that are good through the end

21 of 60 years. Unit 3 we have PT curves that are good

22 through I believe 37 EPFY. So for Unit 3 we're going

23 to have to update the curves one more time.

24 As far as PTS is concerned, for Unit 2 we

25 don't have any issues right now. Unit 3 we do have one

1 plate that is expected to exceed the 270-degree limit,
2 10 CFR 50.61, and it's I believe around 2025. So we
3 will have to demonstrate that we'll below 270 or we'll
4 have to submit a 50.61(a) analysis similar to what
5 Palisades has submitted, similar to what Beaver Valley
6 submitted, although they have pulled theirs back.
7 But, yes, that's for Unit 3.
8 MEMBER RICCARDELLA: Thank you.
9 DR. SHACK: You mentioned that you have no
10 baffle bolt cracking. So you've expected baffle
11 bolts --
12 MR. DOLANSKY: No, no. We have not -- he
13 asked if we had found any baffle bolt cracking. We have
14 not. We haven't inspected baffle bolts with UT, but
15 we haven't found any loose parts either. So right now
16 I would say we don't. But we won't know for sure until
17 we do the ultrasonics in 2016.
18 MEMBER RICCARDELLA: And it is part of
19 your program to do --
20 (Simultaneous speaking)
21 MR. DOLANSKY: Yes, absolutely. We're
22 doing every baffle bolt.
23 MEMBER RICCARDELLA: Every bolt?
24 MR. DOLANSKY: Yes, we're doing with UT in
25 spring of 2016 and spring of 2019. Every baffle-former

bolt.

MEMBER RICCARDELLA: And I assume you'll have the minimum bolt pattern by then?

MR. DOLANSKY: Yes. Minimum bolting pattern analysis is scheduled to be completed by February of 2016.

MR. DACIMO: And those are the kind of commitments we track on a Commitment Tracking Program.

Anything else on reactor vessel internals?

(No audible response)

MR. DACIMO: Okay. Underground piping. Nelson Azevedo?

MR. AZEVEDO: Yes. Good morning. Again name is Nelson Azevedo. Just to start with a definition, underground piping is defined as below-grade, in contact with air with limited accessibility. We chose that program to reflect new regulatory guidance. And primarily what I'm talking about there is the definition of limited accessibility originally wasn't real clear, so we had some discussion with the staff. So we upgraded our program to reflect that guidance.

MEMBER STETKAR: The last time we met you didn't have any underground piping --

MR. AZEVEDO: That's correct.

1 MEMBER STETKAR: -- according to your
2 interpretation of the definition, right?
3 MR. AZEVEDO: That's correct.
4 MEMBER STETKAR: Okay.
5 MR. AZEVEDO: And that's primarily what
6 I'm talking about. We went back. We added it.
7 MEMBER STETKAR: Yes.
8 MR. AZEVEDO: All underground piping
9 inspections due prior to the PEO have been completed
10 for Unit 2. We have not found any adverse conditions.
11 And also we just went ahead and coated the Unit 2
12 underground piping with a bitumastic coat similar to
13 what would be doing for buried piping. So that piping
14 is coated now.
15 We've completed about 50 percent of the
16 pre-PEO inspections for underground piping at Unit 3.
17 And the remainder of the inspections will be completed
18 this upcoming summer. Again, no adverse conditions at
19 either Units 2 or 3 as far as underground piping is
20 concerned.
21 MEMBER STETKAR: And because there was
22 concern about the definition of limited accessibility,
23 you have enough accessibility to get in and actually
24 coat the pipes? You said you coated --
25 MR. AZEVEDO: Yes. Yes.

1 MEMBER STETKAR: -- all of the underground
2 pipes.
3 MR. AZEVEDO: Right.
4 MEMBER STETKAR: Okay.
5 MR. AZEVEDO: Yes.
6 MR. BARTON: Does that include your fire
7 protection piping?
8 MR. AZEVEDO: For underground piping?
9 MR. BARTON: Yes.
10 MR. AZEVEDO: No, the underground piping
11 at Unit 2 was the diesel fuel oil piping. And the Unit
12 3 is also the diesel fuel oil piping. There's some
13 service water piping and there's some city water
14 piping.
15 MR. BARTON: No fire protection water
16 piping?
17 MR. AZEVEDO: There's no fire protection
18 water piping underground.
19 MEMBER STETKAR: That's buried.
20 MR. AZEVEDO: That's coming up.
21 MR. BARTON: Oh, that's coming up later?
22 MR. AZEVEDO: Yes, this is just
23 underground.
24 MEMBER STETKAR: This is underground.
25 MR. BARTON: Oh.

1 MEMBER STETKAR: This is a pipe in a box
2 as opposed to a pipe in the soil.
3 (Simultaneous speaking)
4 MR. BARTON: -- pipe in soil.
5 MEMBER STETKAR: Right.
6 MR. AZEVEDO: That's why I wanted to get
7 the definition up front.
8 PARTICIPANT: This is in contact with air.
9 MR. AZEVEDO: Right.
10 MR. DACIMO: That takes us right to the
11 next slide.
12 MR. AZEVEDO: Okay. So buried piping.
13 So again, just for definition, buried piping is again
14 below grade in contact with soil. All buried pipe
15 inspections required prior to the PEO have been
16 completed at both Units 2 and 3. The inspection
17 results have demonstrated the piping and the protective
18 coating are generally in good condition. There have
19 been some minor coating imperfections, some nicks in
20 the coating. We corrected those. We recoated those
21 sections prior to backfill.
22 There have been two exceptions to the
23 general good condition. One was the 2009 through-wall
24 leak which we discussed in the 2009 ACRS meeting. I'd
25 like to answer questions if you have any questions on

1 that. The other issue that we found was in 2014 at Unit
2 3. One of the water service water lines in one of the
3 moats that we excavated, there were two areas that had
4 more than minor degradation. Both of those locations,
5 both the Unit 3 locations and the Unit 2 locations have
6 been repaired. In both instances the piping remained
7 capable of performing their intended safety function.
8 Next slide. There are approximately
9 16,000 feet of buried piping within the scope of license
10 renewal. We have a lot more piping than that buried
11 at IPEC, but just within the scope of license renewal
12 we have about 16,000 feet. We have inspected about
13 1,000 feet, in excess of 1,000 feet on each unit, about
14 a total of 2,000 feet. Here I'm talking about the
15 direct visual inspections.
16 IP2 committed to inspect 20 carbon steel
17 locations prior to the PEO. Unit 2 does not have any
18 buried stainless steel piping. Unit 3 committed to
19 inspect 11 carbon steel and 3 stainless steel buried
20 piping locations prior to the PEO. Unit 2 committed
21 to inspect 14 carbon steel locations and IP3 committed
22 to inspect 14 carbon steel and 2 stainless steel
23 locations during each of the 10 years of the PEO. And
24 again, all of the locations prior to the PEO have been
25 inspected.

MEMBER STETKAR: And you're not -- help me out on this because I'm trying to read real time and I don't read and I don't speak very well real time. So you're not going to do any guided wave inspections. Is that right?

MR. AZEVEDO: We have done guided wave inspections.

MEMBER STETKAR: You have?

MR. AZEVEDO: Yes, we have.

MEMBER STETKAR: But the staff didn't accept them because it's not an --

MR. AZEVEDO: Right.

MEMBER STETKAR: Are you going to continue to do guided wave inspections in the future, or are you just --

MR. AZEVEDO: We have not made that decision, but based on the limited results that we got from the guided wave that we did in the past, we will likely just continue to do the direct visual inspections.

MEMBER STETKAR: They didn't identify anything?

MR. AZEVEDO: They just said the results were not real reliable.

MEMBER STETKAR: Okay.

1 MR. AZEVEDO: We'll just leave it at that.
2 MEMBER STETKAR: Okay. Thanks.
3 MR. AZEVEDO: We do have --
4 MEMBER STETKAR: The reason I was curious
5 is it's -- buried piping is an issue at several sites,
6 and a lot of the sites have said, well, we're going to
7 do these -- despite the fact that it's not an approved
8 methodology, we're going to do them because it seems
9 to be a promising technology. And I was curious what
10 your experience --
11 (Simultaneous speaking)
12 MR. DACIMO: I believe our experience,
13 yes, has not been -- is not as promising as maybe I've
14 advised.
15 MEMBER STETKAR: Okay.
16 MR. AZEVEDO: But we did them in 2009. So
17 obviously the technology continues to improve. If it
18 improves to the point that we feel there's benefits,
19 we will consider it again in the future, but right now
20 it's direct visual inspections.
21 MEMBER RICCARDELLA: There's a basic
22 physics problem is that when the pipe's buried it
23 tenuates very --
24 (Simultaneous speaking)
25 (Laughter)

1 MEMBER STETKAR: Yes.
2 MEMBER RICCARDELLA: -- you don't it get
3 very long. It might work better for your underground
4 piping.
5 MR. AZEVEDO: Right.
6 MEMBER SCHULTZ: Nelson, have you
7 designed the program under which you're going to
8 determine what you're going to inspect and when in the
9 longer-range program?
10 MR. AZEVEDO: Yes, we have a Buried and
11 Underground Piping Program. We have the locations.
12 We know where we're going to be inspecting for the next
13 10 years. I don't have it here with me, but, yes, all
14 that's laid out in the future.
15 MEMBER STETKAR: That's basically
16 consistent with GALL Rev 2, right?
17 MR. AZEVEDO: Yes.
18 MEMBER STETKAR: The --
19 MR. AZEVEDO: Yes. Yes, there's --
20 (Simultaneous speaking)
21 MEMBER STETKAR: -- samples and the
22 inspection?
23 MR. AZEVEDO: Right. Also, there's the
24 NEI-09-14. We have an Asset Management Plan. So
25 there are a lot of things driving the Buried and

1 Underground Piping Program.

2 MEMBER SCHULTZ: Yes, that's driven by OE

3 as well as your own experience as you develop it from

4 your current inspections --

5 (Simultaneous speaking)

6 MR. AZEVEDO: That's correct.

7 MEMBER SCHULTZ: Good. Thank you.

8 MR. AZEVEDO: Yes.

9 MR. BARTON: Now that we're buried, how

10 about buried tanks? You going to cover that or --

11 MR. AZEVEDO: Well, I can cover it now.

12 We do have some buried tanks. They're primarily fuel

13 tanks.

14 MR. BARTON: Right.

15 MR. AZEVEDO: Either diesel fuel oil or

16 propane tanks.

17 MR. BARTON: Right.

18 MR. AZEVEDO: We rely on the existing

19 programs that we have in place. We do pressure tests.

20 We periodically go into tanks, clean them and do visual

21 inspections.

22 MR. BARTON: Have you done any UTs?

23 MR. AZEVEDO: I'm not aware of any UTs on

24 the buried tanks. UTs are only done if there's a visual

25 indication.

1 MR. BARTON: Okay.

2 MR. AZEVEDO: I'm not aware of any issues

3 that we had, so I don't believe we have. We have done

4 UTs on above-ground tanks, but buried tanks, no.

5 MR. BARTON: Okay.

6 MEMBER STETKAR: Since you mentioned

7 above-ground tanks and since I haven't seen it here,

8 I might as well ask because John was going to ask anyway.

9 (Laughter)

10 MR. BARTON: That was my next question,

11 but go ahead.

12 MEMBER STETKAR: Well, no, go on.

13 MR. BARTON: No, no, no.

14 MEMBER STETKAR: No, you're --

15 MR. BARTON: Above-ground tanks. What

16 tanks have you included in this category, above-ground

17 steel tanks? And are there any Unit 1 tanks on that

18 list and are they included in the program?

19 MR. AZEVEDO: Yes and yes. There are Unit

20 1 tanks, above-ground tanks, the CST tanks.

21 MR. COX: Yes, I didn't bring my list with

22 me, but we got the condensate storage tanks on Unit 1

23 and the city water tank. That's the Unit 1 tanks.

24 MR. BARTON: Now, on Unit 2?

25 MR. COX: Unit 2 and 3 we had the primary

1 water storage tank, the refueling water storage tank.
2 We have some fire water storage tanks and condensate
3 storage tanks.
4 MR. BARTON: Now, what kind of inspections
5 have you done on your above-ground tanks?
6 MR. AZEVEDO: We have PMs that we go in.
7 And I believe they're five years, but I don't know for
8 sure. We go in and do a visual inspection. We drain
9 the tank. We just did the refueling water storage tank
10 at Unit 2 last outage. We go in and do visual
11 inspections and if we find any degradation, we do a
12 follow-up ultrasonic inspection.
13 MR. BARTON: You UT the bottoms for
14 whatever --
15 MR. AZEVEDO: Again, areas that we find
16 visually. If there's a reason to go and do UTs, we will
17 do follow-up UTs.
18 MR. BARTON: Are these tanks,
19 above-ground tanks insulated or not?
20 MR. AZEVEDO: Yes, most of them are
21 insulated. Rich may --
22 MR. DRAKE: Actually some of them are not.
23 MEMBER STETKAR: Rich, just for the
24 record.
25 MR. DRAKE: This is Rich Drake, yes. Most

1 of them are not insulated, but they're stainless steel
2 or carbon steel and then the tank.
3 MEMBER STETKAR: I had a specific
4 question. Commitment 1 says that you're going to
5 measure the thickness of the bottom surfaces of the
6 condensate storage tank, city water tank and fire water
7 tank once during the first 10 years of the period of
8 extended operation. That's a commitment. So that's
9 actual thickness measurement. It's not an
10 opportunistic thickness measurement based on
11 observations. Have you done any of that yet?
12 MR. AZEVEDO: That's a separate
13 commitment. Maybe Peter can talk about the
14 commitments.
15 MR. GUGLIELMINO: I can give you some
16 insight on that.
17 MEMBER STETKAR: Say your name.
18 MR. GUGLIELMINO: Peter Guglielmino,
19 project manager for the implementation. On Unit 1 we
20 have work orders that will be performed before the
21 10-year period for the tanks that have been identified
22 in Commitment 1.
23 MEMBER STETKAR: Okay.
24 MR. GUGLIELMINO: So they're in place and
25 they will be --

1 MR. DACIMO: And the answer is it hasn't
2 been completed yet.
3 MEMBER STETKAR: Hasn't been completed
4 yet?
5 MR. DACIMO: Right. That's correct.
6 MEMBER STETKAR: And it will be? What
7 about -- since you're there and you're probably the same
8 person, Commitment 4, also requires measurement of the
9 bottom surfaces. And I'm only looking at Unit 2.
10 Diesel generator fuel oil storage tanks, fuel oil day
11 tanks, Appendix R diesel fuel oil day tank, gas turbine
12 fuel oil tank and the diesel fire pump.
13 MR. GUGLIELMINO: Work orders are in place
14 to perform the UT for these tanks --
15 MEMBER STETKAR: Okay.
16 MR. GUGLIELMINO: -- before the 10-year
17 period.
18 MEMBER STETKAR: Before the 10-year
19 period?
20 MR. GUGLIELMINO: Yes.
21 MEMBER STETKAR: But none of them have
22 been done yet?
23 MR. GUGLIELMINO: No.
24 MEMBER STETKAR: Okay. Thank you.
25 MR. DACIMO: Any other questions on buried

1 piping?

2 (No audible response)

3 MR. DACIMO: Okay. Buried piping

4 associated with cathodic protection.

5 MR. AZEVEDO: Okay. Again, my name is

6 Nelson Azevedo. For cathodic protection we did a study

7 back in 2007-2008, the time frame to see whether we

8 could install a site-wide protection system.

9 Basically, the results of that was that because of the

10 site geology and the infrastructure of the site a

11 site-wide cathodic protection system was not feasible.

12 We have implemented and installed targeted

13 cathodic protection systems in some specific areas of

14 the plant. These include the city water piping,

15 condensate storage tank piping in both Units 2 and 3.

16 These cathodic protection systems provide

17 some corrosion protection, but not the full NACE

18 protection because of the non-conductive nature of the

19 site. And again because of the infrastructure of the

20 buried structures.

21 The main corrosion protection barrier at

22 Indian Point for buried piping is the protective

23 coating. That's what we rely on primarily.

24 Since the full cathodic protection systems

25 are not achievable at IPEC, the installed systems are

1 not credited in establishing the inspection
2 population, which means that we end up inspecting a
3 larger population because we're not crediting the
4 cathodic protection system.
5 MR. BARTON: Now in answer to an RAI you
6 said you were going to add systems to that program.
7 What was added?
8 MR. AZEVEDO: The CST piping in Unit 2 and
9 the CST piping in Unit 3.
10 MR. BARTON: Okay. That's all that was
11 added to the --
12 MR. AZEVEDO: Yes.
13 MR. BARTON: Okay. And the original was
14 just a city water line or something?
15 MR. AZEVEDO: Well, the cathodic
16 protection system for the city water line is a little
17 bit different. We have a city water line by the main
18 road that runs in proximity to a gas line, and the gas
19 line does have a cathodic protection system. We
20 observed some stray currents coming from the gas line
21 cathodic protection system, so the primary purpose of
22 that system is to counteract the stray current from the
23 gas line. And that was installed and that is up and
24 running and functional.
25 MR. BARTON: And everything I know is

1 different. Your CP system, your goal is to have 85
2 percent availability of 80 percent of the test points
3 to meet the 85 percent criteria. Why did you come up
4 with those numbers? I know other plants that are
5 talking about their cathodic protection systems shoot
6 for 90 percent availability. And why is 85 percent
7 your target, and is that acceptable to the staff?
8 MR. AZEVEDO: We both come out of the ISG,
9 and the call. But the short answer for Indian Point
10 is what we're talking about there is obtaining the
11 negative 850 millivolts 80 percent or 85 percent of the
12 time. We don't achieve those limits, so we don't meet
13 80 percent or 85 percent because we don't get up to those
14 limits because of the non-conductivities of the soil.
15 MR. BARTON: All right. Thank you.
16 MEMBER BALLINGER: Now, these are in press
17 systems?
18 MR. AZEVEDO: Yes, press current.
19 MEMBER BALLINGER: And you monitor the
20 potential. Do you also monitor the current?
21 MR. AZEVEDO: We do have a procedure. I'm
22 a mechanical engineer. I'm not an electrical
23 engineer.
24 MEMBER BALLINGER: Using a coating to drop
25 the current necessary to achieve the potential. So if

1 you get breaching in the coating, the current will go
2 up. And I'm just curious as to whether or not there's
3 a system in place where you take a look at the current
4 as well as -- you can't do it with a sacrificial system,
5 but you can do it with a compressed system.
6 MR. AZEVEDO: I believe that we do monitor
7 the current, but again I'm --
8 MR. DACIMO: We can back to you on that.
9 MR. AZEVEDO: Yes.
10 MR. DACIMO: We can do that. Okay?
11 MEMBER BALLINGER: And the stray current
12 issue is -- and there's something in place there if you
13 put another piece of pipe somewhere in the system later
14 on down the road, you've got a program in place to ask
15 the question does my putting this pipe in here all of
16 a sudden mess up my cathodic protection system? In
17 fact it makes something worse due to stray current.
18 There's a program in place to make sure that happens?
19 MR. AZEVEDO: Right, we do periodic
20 surveys of the site. We also did -- I didn't mention,
21 we did an APEC survey. So, yes. The answer is yes.
22 MEMBER STETKAR: Again, just for the
23 record because it was brought up, the GALL Report
24 itself, NUREG-1801 indicates 90 percent availability,
25 but there's a license renewal Interim Staff

1 Guidance-2011-03 that drops that back to 85 percent.
2 So the 85 percent is consistent with the Interim Staff
3 Guidance that supersedes the GALL Report.
4 MEMBER BALLINGER: But they're not taking
5 credit.
6 (Simultaneous speaking)
7 MEMBER STETKAR: No, but I mean just to
8 make sure that we get clarification of the 85 versus
9 90. If they were ever going to try to take credit for
10 it, 85 is good enough.
11 MR. DACIMO: For lack of a better term, we
12 took a belt and suspenders approach to piping
13 protection, and our feeling was that we wanted to do
14 this anyway.
15 MEMBER BALLINGER: And so you got an
16 interface somewhere between the site and the
17 Algonquin --
18 MR. DACIMO: Yes.
19 MEMBER BALLINGER: -- gas line?
20 MR. DACIMO: Yes.
21 Okay. Let's go to the next area, which is
22 going to be program changes. Alan Cox?
23 MR. COX: Yes, this is -- I just want to
24 talk about a couple of slides here about some examples
25 of program changes that have been made at Indian Point.

1 There have been a number of changes made since the LRA
2 was submitted some eight years.
3 The reasons for the changes include plant
4 modifications. It might add or remove a piece of
5 equipment. There are changes responding to RAIs that
6 we get from the staff during the license renewal review.
7 There's also changes to staff guidance documents as a
8 result of operating experience, ISGs, the GALL
9 revisions. Those have resulted in changes. And
10 finally the example that Bob talked about on the record,
11 vessel internals, we made changes to that program based
12 on the industry evolving state of knowledge and the
13 issuance of the MRP-227-A.
14 These next two slides are just examples of
15 some of the more recent changes that have been made.
16 And I'm not going to try to read all these to you, but
17 you see anything there and you've got any questions,
18 we'll pause for just a second there and let you have
19 a chance to look at them.
20 MEMBER SCHULTZ: So, Alan, these are not
21 the most important. They're the most recent? Or
22 they're the most important of the recent?
23 MR. COX: That's correct.
24 MEMBER SCHULTZ: All right.
25 MR. COX: That's a good way to put it.

1 MEMBER SCHULTZ: Thank you.

2 MR. COX: They're examples.

3 MEMBER STETKAR: Since people

4 are reading and since you only have a couple of slides

5 left, I might as well get in a couple of questions that

6 weren't related to particular topics on your slides.

7 What's the situation with the containment

8 exterior these days? We talked quite a bit in 2009

9 about the pop-outs, and I know you've done subsequent

10 inspections or -- "inspection" is probably too strong

11 a word. Examinations. Have the existing pop-outs

12 increased in size, depth?

13 MR. DACIMO: Richard Drake is going to

14 address that.

15 MR. DRAKE: Yes, I'm Richard Drake. I'm

16 the civil structural supervisor at Indian Point.

17 MEMBER STETKAR: Okay.

18 MR. DRAKE: So we initially identified

19 several of the pop-outs. We do monitor them. They

20 have not increased in size. They're anywhere from 4

21 to 10 inches. Currently at Unit 2 we're tracking 125

22 indications, which we consider this. We actually went

23 and we had an opportunity in the 2009-2010 time frame

24 to go and actually coat those. Of those indications,

25 like I said, there's 105 locations that we coated.

1 Twenty are inaccessible, so we can't get to coat them.
2 But we monitor them. There's no further degradation
3 going on there. Seventy of them are considered
4 CADWELDs --
5 MEMBER STETKAR: Yes.
6 MR. DRAKE: -- where we're just slicing
7 the enforcement bars. Two are miscellaneous code
8 rebar. Fifty-three are just miscellaneous steel such
9 as scaffold connecting points for construction. And
10 a lot of them were -- they went back after construction
11 and put a little skim coat of concrete there for doing
12 ILRTs, for weathering. That little surface concrete
13 pops off.
14 MR. BARTON: So you haven't identified any
15 additional pop-outs?
16 MR. DRAKE: Not since then. So right now
17 Unit 2 is 125. We are tracking it and they're coated.
18 MR. BARTON: How about this containment
19 spalling that you identified in 2000?
20 MR. DRAKE: That's what we're talking
21 about.
22 MEMBER STETKAR: And just to be clear,
23 since 2009, which is the last time we discussed, you
24 haven't found any increase in the indications?
25 MR. DRAKE: No.

1 MEMBER STETKAR: Your 125 is the inventory
2 that --
3 (Simultaneous speaking)
4 MR. DRAKE: Yes, we are scheduled to
5 another inspection. We've done a little preliminary
6 inspection because we were trying to identify new
7 technology to do remote sizing of them. And they've
8 preliminarily shown that they have not gotten any
9 bigger.
10 MEMBER STETKAR: Okay. Thank you.
11 MR. DACIMO: Any other questions on the
12 program changes?
13 MEMBER SCHULTZ: Alan, I'll just ask you
14 one question because it's -- and it's probably the
15 shorthand, but under elastomer degradation you've got
16 materials added. I presume that if you saw
17 degradation, that you in fact investigated the
18 degradation, perhaps changed the material. When you
19 just add material, I'm concerned that it may impact
20 future inspection opportunity.
21 MR. COX: I'm not sure I follow your
22 question there. I think this was where we identified
23 that we had some elastomers installed in a component
24 that maybe we hadn't recognized or hadn't determined
25 before in that system. I can look up the details of

1 that and get back with you. I don't have the specifics
2 on that.
3 MEMBER SCHULTZ: Okay. That'll be fine.
4 Thank you.
5 MR. BARTON: Just some questions on your
6 containment. The thermal insulation on the steel
7 liner plate, the lower elevations in the containment,
8 it's in there to limit temperature to 80 degrees during
9 a design basis accident. And you claim that it does
10 not require any aging management. The question I've
11 got, does it ever get inspected for damage or missing
12 sections that would affect its ability to perform its
13 designed function?
14 And number two is how does the liner that
15 is covered by the insulation get inspected and at what
16 frequency?
17 MR. DRAKE: Yes, this is Richard Drake
18 again. So that insulation, which is asbestos, and it
19 also has then a stainless steel covering over it and
20 it has caulking all around it -- that is inspected every
21 outage by engineering. And part of the close-out we
22 have to verify it's done, but we do it early in the
23 outage. We've never started up with -- from an outage
24 where we've had missing pieces of that insulation. And
25 if we do find anything, we put it in our Corrective

1 Action Program to get it fixed.

2 MR. BARTON: How about the liner that's

3 covered by the insulation?

4 MR. DRAKE: The liner, we've had several

5 inspections periodically done. We've had some license

6 renewal commitments to go look at areas behind there.

7 We just did one again at Unit 3. We did a -- located

8 four locations down at the vapor barrier, moisture

9 barrier down at 46-foot and we did -- there again the

10 liner we've done UTs behind there. They're only

11 -- they're minimum wall thickness, or actually almost

12 the installed wall thickness for tolerances and light

13 bus scale. That's all.

14 MR. BARTON: What about visible areas of

15 the liner above the insulation? You notice some

16 corrosion in areas? Do you have a program to repair

17 that corroded coating?

18 MR. DRAKE: Yes, so we have no corroded

19 coatings. The liners are coated --

20 (Simultaneous speaking)

21 MR. BARTON: -- liner?

22 MR. DRAKE: What? The liner above the

23 insulation area.

24 MR. BARTON: Right.

25 MR. DRAKE: There is a red lead primer

which is all intact. There are -- then we have a top coat on top of that. We track and monitor and peeling top coat and we take care of that if we can. And there's been no -- if there's any corrosion, it would be put in a Corrective Action Program.

MR. BARTON: Okay.

MR. DRAKE: Our liner has not exhibited any corrosion.

MR. DACIMO: Containment gets a very thorough inspection prior to being closed out.

MR. DRAKE: Yes, it's closed out. We also do IWE inspections when we -- so we do it.

MR. BARTON: Thank you.

MR. DACIMO: Any other questions?

MR. BARTON: Electric tunnels, partially below grade, seismic 1 concrete structures. And I don't know they're laid out in your site -- or are they subject to water intrusion and cable flooding, or are they sealed?

MR. DRAKE: This is Richard Drake again. So at Unit 3 the electrical tunnels are above ground. They are also part of the Structural Monitoring Program and they are not really subject to flooding.

MR. BARTON: They are not?

MR. DRAKE: They are not.

1 MR. BARTON: Okay.

2 MR. DRAKE: Unit 2, that tunnel is
3 partially below grade. We've had one instance where
4 at a construction scene there was some minor dripping
5 that was identified and recently, just in the past year
6 or so repaired and resealed that. And also not subject
7 to flooding.

8 MR. BARTON: Are those cable manholes
9 inspected on a routine basis for water intrusion?

10 MR. DRAKE: That's a separate issue with
11 the duct banks and manholes.

12 MR. BARTON: Right.

13 MR. DRAKE: That's a little bit different.

14 MR. BURRONI: Hi, this is Rich Burroni.
15 As far as manholes are concerned, we have a baseline
16 six-month Inspection Program on manholes where we will
17 do water. Based on inclement water we will increase
18 that frequency and do it more frequently if required.
19 All the cables in the manholes are lead-jacketed, so
20 it's really not that huge of a concern there with us.

21 MR. BARTON: So have you ever had
22 experience with those cables being completely
23 submerged?

24 MR. DRAKE: That is correct. Yes, we
25 have. And we've pumped them out.

1 MR. BARTON: And what? And you've pumped
2 them out?
3 MR. DRAKE: Pumped out the manhole.
4 MR. BARTON: Never had any cable failures?
5 MR. DRAKE: No, sir.
6 MEMBER STETKAR: I'm sorry. You've had a
7 couple of cable failures. You've one 480-volt cable
8 failure and you had a 13 -- I forgot the voltage -- a
9 high -- what you call a medium-voltage cable, in-scope
10 cables. For the record. And you've enhanced the
11 program since we talked about it in 2009, though, to
12 be consistent with GALL Rev 2.
13 MR. BURRONI: That's correct.
14 MEMBER STETKAR: So you include the
15 400-volt and above cables.
16 MR. BURRONI: That's correct.
17 MEMBER STETKAR: And you're going to do
18 the cable -- you mentioned the opportunistic
19 inspections after heavy rains or whatever. You're
20 going to do the cable testing also, is that correct,
21 according to the --
22 MR. BURRONI: That's correct.
23 MEMBER STETKAR: Okay.
24 MR. DACIMO: Right. That's it. That's
25 all. Okay? Said it all.

1 (Laughter)

2 MR. BARTON: Sorry I missed the 2009

3 meeting.

4 (Laughter)

5 MR. DACIMO: Other questions?

6 MR. BARTON: That's it.

7 MR. DACIMO: Okay. Some concluding

8 remarks. Unit 3 is being prepared to enter the PEO.

9 As was done for Unit 2 the license renewal activities

10 are being or will be conducted as if the plants had

11 received renewed licenses. As I previously mentioned,

12 we will submit the updates to the FSAR come September.

13 Entergy continues to make very strong commitments in

14 terms of dollars to this facility to keep it running

15 safely and securely. Certainly there's always a

16 standard open invitation to any member of the ACRS. If

17 they'd like to visit the plant, they can do that. And

18 the plant has really operated with capacity factors

19 consistently above 90 percent. Safety and reliability

20 in our minds are synonymous

21 MEMBER BANERJEE: So what's been the

22 history of the capacity factor?

23 MR. DACIMO: I'm glad you asked that

24 question.

25 MEMBER BANERJEE: This was a lead-in.

1 MR. DACIMO: Okay. Yes, thank you.
2 Okay? So the capacity factor of the facility was in
3 the low 60s in 2000. Okay? After Entergy purchased
4 the facility we did a total overhaul of both units and
5 both management structures and combined the operating
6 staffs. It was a significant task, but it's resulted
7 in the plant running safely and successfully and has
8 resulted in the plant being a strong performer both from
9 the standpoint of reliability, as well as we think
10 regulatory perspectives. And INPO recognizes our
11 plant as being one of the top plants in the U.S.
12 You know, it is not lost on us that we are
13 in the media capital of the United States. Okay?
14 MEMBER BANERJEE: I live there.
15 MR. DACIMO: Yes. Well, so do I. Okay?
16 You probably can tell by my accent.
17 (Laughter)
18 MEMBER BANERJEE: I live in Manhattan.
19 MR. DACIMO: Oh, okay. As a matter of
20 fact, we all live there. Okay? And us all --
21 MEMBER BANERJEE: There's another point
22 that I wanted to ask you. So you've actually moved your
23 operations to being local now in White Plains, haven't
24 you?
25 MR. DACIMO: Well, we have a White Plains

office, absolutely, where we have people.

MEMBER BANERJEE: You don't have to come from Louisiana or whatever?

MR. DACIMO: No. No, that's not the case. It's actually Jackson. Okay?

MEMBER BANERJEE: Okay. Right.

MR. DACIMO: Jackson, Mississippi is nuclear headquarters. But we have a significant contingency of people located in the Northeast. And certainly being one plant in a fleet of plants has helped things from the perspective of we can kind of do business the same way. We rely upon our sisters and brothers at the other units to help us out. And this plant is a major, if not the major piece in the Entergy nuclear fleet. And so, we garner a lot of attention from our corporate management.

MEMBER BANERJEE: Did you invest significantly when you acquired the plant?

MR. DACIMO: Yes, what I pointed out in one of the slides, it's over $600 million in capital improvements. Okay?

MEMBER BANERJEE: Since the time you acquired --

(Simultaneous speaking)

MR. DACIMO: That's correct. Right.

1 And that's capital improvements. And in reality I
2 think to a certain extent those numbers are
3 conservative. But, yes, absolutely. The plant's
4 been fixed. And will continue to be fixed on an ongoing
5 basis because we just think it's the only way to run
6 these facilities.
7 And I want to point out that our philosophy
8 at Indian Point isn't any different than what the
9 philosophy is at any other Entergy nuclear plant. It's
10 all the same. But certainly the plant staff, like the
11 other plant staffs, all live in the local area. We all
12 have our neighbors and friends in the area. We're all
13 very concerned about the facility from the standpoint
14 of always projecting that the plant is safe and reliable
15 and doing the things behind that to back that up.
16 That's just the way we do business. And we think that
17 that is the only way to do business and hopefully that
18 will pay dividends as we receive our license for the
19 next 20 years.
20 Any other questions?
21 MR. BARTON: I=ve got one more.
22 MR. DACIMO: Sure, Please.
23 MR. BARTON: The one-time inspection of
24 code class 1 small bore piping, I couldn't find what
25 you really did. I know what GALL 1M35 says, and I don't

1 know that you did what that GALL Program describes. So
2 can you tell me what you did for inspection of small
3 bore butt welds and socket welds?
4 MR. DACIMO: Nelson Azevedo will address
5 that.
6 MR. AZEVEDO: Yes, my name is Nelson
7 Azevedo. We've done both UTs and destructive
8 examinations of both the small bore butt welds and
9 socket welds.
10 MR. BARTON: How many in each unit?
11 MR. AZEVEDO: Unit 2 we've done two butt
12 welds and --
13 MR. BARTON: What's your total butt welds
14 and socket welds in each unit? What percentage did you
15 do?
16 MR. AZEVEDO: I believe the requirement
17 was a minimum of three percent.
18 MR. BARTON: Three percent?
19 MR. AZEVEDO: Yes.
20 MR. BARTON: And you did that?
21 MR. AZEVEDO: We did that, yes.
22 MR. BARTON: Because you had no failures
23 of that size piping?
24 MR. AZEVEDO: Right. So we did six butt
25 welds on Unit 2. We did four butt welds on Unit 3. We

1 did 20 socket welds at Unit 3, 8 socket welds at Unit
2 2. Now, Unit 2 we've had some socket weld leaks. And
3 as a result of that, we're going to be doing an
4 additional 25 socket welds during each of the 10-year
5 periods.
6 MR. BARTON: Okay.
7 MEMBER STETKAR: The Unit 2 socket welds
8 are part of a continuing inspection program?
9 MR. AZEVEDO: That's correct.
10 MEMBER RICCARDELLA: Approximately how
11 many socket welds do you have in each unit? Just
12 ballpark.
13 MR. AZEVEDO: Do you know that, Bob? I
14 did have that --
15 MEMBER STETKAR: It was in the
16 300 --
17 PARTICIPANT: It was a lot.
18 MR. AZEVEDO: Yes. Yes.
19 MEMBER STETKAR: I mean, not a lot
20 compared to what we've seen at some other plants.
21 MR. COX: This is Alan Cox. We provided
22 it our RAI response. I can look it up and get back to
23 you, but I don't remember the exact number.
24 MR. DACIMO: We'll take that as an action
25 item. I can get that to you.

1 MR. AZEVEDO: And we have 195 butt welds
2 and 433 socket welds at IP2. And we have 96 butt welds
3 and 333 sockets welds at IP3.
4 MEMBER RICCARDELLA: And your history of
5 socket weld issues?
6 MR. AZEVEDO: Our history, at Unit 2 we
7 have had a few leaks. And that's the reason why we're
8 going to be doing the additional 25 each 10-year. Unit
9 3 we have not had any issues.
10 MEMBER RICCARDELLA: Doing anything about
11 vibration monitoring? My philosophy is -- you know
12 I've done a lot of work on socket welds. And ultrasonic
13 is of limited use really in preventing socket weld
14 leaks.
15 MR. AZEVEDO: Right. And most of the
16 leaks that we had were either like pinholes through the
17 socket welds -- so those were not really
18 vibration-driven. We feel that it's a weld, so it kind
19 of behaves like a casting. So after 14 years of
20 operation, we looked at them. They're just pinhole
21 leaks really.
22 MR. DOLANSKY: Also, just for
23 clarification, some of the inspections done at Unit 2
24 were destructive.
25 MR. AZEVEDO: Right, that's -- we actually

1 cut them up, yes.

2 MR. DOLANSKY: So we wouldn't have an

3 issue with the UT destructively.

4 MEMBER RICCARDELLA: Yes, if it's

5 vibration, high-cycle would give you 90 percent crack

6 initiation. You're not going to get much of a window

7 to find it by either UT or destructive. It's really

8 you have to prevent the vibration. But after this

9 amount of time it wouldn't happen unless the vibration

10 conditions change.

11 MEMBER BANERJEE: Did you have to remove

12 any insulation to comply with GSI-191 or change out any

13 insulation?

14 MR. DRAKE: As part of the GSI-191 we've

15 tracked -- yes, identified all the insulation.

16 Anything that we go back in we've zoned to RMI

17 insulation. We are taking that route. I don't

18 remember if we had to remove too much at this time, but

19 we're going forward. We're trying to increase our

20 margin as part of our program.

21 MR. DACIMO: Any other questions or

22 comments? Yes, please.

23 MEMBER SCHULTZ: Yes, I've got a couple of

24 general questions.

25 MR. DACIMO: Sure.

1 MEMBER SCHULTZ: One was you mentioned
2 where you are with regard to Unit 3. You mentioned a
3 few things that need to be done this summer. Where are
4 you with respect to the program to move into the period
5 with Unit 3 as compared to Unit 2? Are you in good
6 shape?
7 MR. DACIMO: Yes, we're in good shape.
8 Absolutely.
9 MEMBER SCHULTZ: You've used your lessons
10 learned on Unit 2 --
11 MR. DACIMO: That's correct.
12 MEMBER SCHULTZ: -- moving forward in a
13 programmatic way --
14 MR. DACIMO: Exactly.
15 MEMBER SCHULTZ: -- for Unit 3?
16 MR. COX: One other comment related to
17 that; this is Alan Cox, is the Unit 2 inspections of
18 programs and commitments, many of the programs are
19 common programs that are shared between two units. So
20 even though we haven't done the official Unit 3
21 inspections, we've already got the programs in place
22 because they were there for Unit 2.
23 MEMBER SCHULTZ: Right. Okay.
24 MR. DACIMO: So like I said, we're pretty
25 far along on IP3 because of that.

1 MEMBER SCHULTZ: That's makes a
2 difference for the site.
3 The other question is you're in a unique
4 position -- not unique, but different perhaps than
5 other licensees moving into the extended period.
6 You've described a lot of improvements you've made
7 since you acquired the site both organizationally as
8 well as physically. And now comes the license renewal
9 period. Has the GALL Program, has the program that's
10 been set up to move to license renewal -- has it
11 demonstrated that you've made good decisions moving
12 forward with all of the safety-related changes that you
13 made, safety improvement changes that you've made as
14 an organization? Is it helping? Is it demonstrating
15 that you made the right decisions? Is it helping going
16 forward?
17 MR. DACIMO: I think that --
18 MEMBER SCHULTZ: It is well-connected?
19 MR. DACIMO: Yes, the way I would try to
20 answer that question would be I think there is a
21 relationship -- as a matter of fact I know there's a
22 relationship between safety and reliability. The
23 plant is --
24 MEMBER SCHULTZ: That means your focus in
25 the improvements were on -- well, I guess reliability

1 in terms of improving capacity factor from 60 percent
2 to 90 --
3 (Simultaneous speaking)
4 MR. DACIMO: Well, yes, but also
5 reliability in terms of safety system availability.
6 Okay?
7 MEMBER SCHULTZ: We would agree, but go
8 ahead.
9 MR. DACIMO: Safety system availability
10 in terms of unplanned entries into unplanned LCOs.
11 Okay? I don't want to sit here and say because the
12 plant's running better --
13 MEMBER SCHULTZ: Yes.
14 MR. DACIMO: -- we're getting -- you know
15 -- okay? That's only one measure. There are a number
16 of other measures, okay, which would include your
17 corrective maintenance backlog, your preventive
18 maintenance backlog, your work execution schedule,
19 work planning schedule parameters. Also certainly how
20 often we find ourselves in an unplanned limited
21 condition for operation. And we have a range of
22 indicators that we measure our plant performance by
23 which certainly transcend capacity factor. And I
24 would say that certainly those are significant changes
25 over the last 14 years that have happened in this

1 facility.

2 And I guess the way I think about it is,
3 and I think the way our team thinks about it and the
4 way the leadership team thinks about it is that the
5 capacity factor is a resultant of the things that we
6 just discussed, by making the systems more reliable,
7 by making the equipment more effective, okay, and
8 calling it -- but I don't want to portray that it is
9 only these programs, because it transcends that. It's
10 the training we provide our people. It's the training
11 we provide our operators, our mechanics. Okay? It's
12 how the organization works together. It's providing
13 the resources to the team to be able to execute their
14 responsibilities.

15 So the company has done a full court press
16 to get this plant to operate the way it needs to operate.
17 All right? And really has left no stone unturned. And
18 so that transcends the site organization. The site
19 organization certainly has the responsibility and
20 accountability; and nobody could talk about it better
21 than Larry, okay, to make sure that the right thing
22 happens. But on the other hand there's also very
23 strong corporate oversight to make sure that the
24 waterfront is covered. And that's one of the things
25 that has been one of the most positive things about

1 being one in a fleet of plants.

2 Yes, how often are MRMs run, Larry,

3 monthly?

4 MR. COYLE: Correct.

5 MR. DACIMO: Yes. Okay? So I'll be

6 candid, okay, the corporate leadership comes down and

7 grills you, and you better have answers, and the answers

8 had better make sense. And then if they don't, they

9 want to know, well, what are you doing or why are not

10 doing this, okay, which is always a lot of fun, right?

11 And you guys are laughing. I don't mean

12 to entertain you. Okay?

13 (Laughter)

14 MEMBER STETKAR: It's why we don't have

15 video.

16 (Laughter)

17 MR. DACIMO: Yes, right. Exactly.

18 Okay?

19 MEMBER STETKAR: It's not you.

20 It's --

21 (Simultaneous speaking)

22 MR. DACIMO: All right. I don't

23 photograph well anyway.

24 (Laughter)

25 MR. DACIMO: Am I answering your question?

1 Is the team answering your question?

2 MEMBER SCHULTZ: Yes, you got to where I

3 wanted to.

4 MR. DACIMO: Okay.

5 MEMBER SCHULTZ: That is -- and I wanted

6 to get to the point of your experience as you move into

7 the license renewal activities. Have these

8 complemented where you were going in the first place?

9 Obviously you've been doing a lot more looking,

10 looking, looking. You had very good experience as you

11 have looked. And I wanted to understand if everything

12 is meshing right for you as you go forward. It sounds

13 like it is.

14 MR. DACIMO: Yes, it sounds like it is, but

15 the problems becomes as soon as you become comfortable,

16 that's when you have problems. Okay? So it seems like

17 things are going the right way, but we also have to

18 always maintain a very skeptical attitude on a going

19 forward basis about what we're seeing because if you

20 don't, you can overlook things. And we can't afford

21 to do that.

22 MEMBER SCHULTZ: Has the program approach

23 for licensure, has it changed your organizational

24 perspective, the way you've done things

25 organizationally? You talked about the number of

1 staff hours that have been devoted to the activities
2 and so forth, but have you changed things
3 organizationally to --
4 MR. DACIMO: Yes.
5 (Simultaneous speaking)
6 MEMBER SCHULTZ: -- the Inspection
7 Program that you'll have to do --
8 (Simultaneous speaking)
9 MR. DACIMO: Temporarily. That's one of
10 the reasons why I have my job is because the companies
11 recognize that we need a certain level of corporate
12 leadership, although really I consider myself to be a
13 member of the plant staff as much as the corporate
14 organization, and to keep us focused. Now, my
15 organization will disappear once the licenses are
16 renewed. Okay? And the reason being --
17 MEMBER SCHULTZ: Will not disappear?
18 MR. DACIMO: Will disappear.
19 MEMBER SCHULTZ: Will disappear?
20 MR. DACIMO: Will disappear. Because
21 here's the thing, right, the good thing is that the
22 License Renewal Programs are imbedded in the day-to-day
23 Operations Programs. And that's what you want.
24 Because what you really want is you don't want to have
25 my organization continue. You want the staff on the

1 plant to look at the License Renewal Programs as they
2 would look at any other Tech Spec Program and not try
3 to -- well, we don't need to do that, or we need to do
4 this. In other words, this is as important as anything
5 else is to ensure safety and reliability. And I think
6 you guys could speak to this better.
7 MR. DOLANSKY: Right, as an example I'm
8 the program owner for Reactor Vessel Internals, which
9 are new as a result of license renewal. I'm also a
10 program owner for the Steam Generator Program, which
11 is just ongoing. Fred's organization may go away, but
12 I'm a member of the plant. I have the program. I own
13 steam generators. I also own reactor vessel
14 internals. I'm going to own them going forward. It's
15 just been rolled right into the normal plant programs
16 with that as an example.
17 MR. DACIMO: And Entergy has recognized
18 that on a broader basis, because what we have is we have
19 a director of Corporate Programs, which is Garry Young,
20 and Garry's really responsible for all of the plants.
21 MR. BURRONI: If I could just add one
22 thing.
23 MR. DACIMO: Yes, please.
24 MR. BURRONI: Our engineering
25 organization --

1 (Simultaneous speaking)
2 MEMBER STETKAR: Rich, identify yourself.
3 MR. BURRONI: Rich Burroni, engineering
4 director. Our design engineering organization
5 consists of a Code Programs section and a Plant Program
6 section. So all these programs will get migrated in.
7 And we have engineers already assigned for these
8 programs. But that's how it's all going to filter in
9 once this entity is --
10 MR. DACIMO: Before we conclude with any
11 other questions, Larry, do you want to make any
12 comments?
13 MR. COYLE: Gosh, I think, Fred, you did
14 a great job, so I'm not sure I can much --
15 (Simultaneous speaking)
16 MEMBER STETKAR: Larry, just identify
17 yourself because --
18 (Simultaneous speaking)
19 MR. COYLE: Sure will. Larry Coyle, site
20 vice president at Indian Point. Maybe just to add one
21 item, Fred kind of talked about just the organization,
22 just on the subject we were on. The Entergy corporate
23 support has just been outstanding. And we recognize
24 the position, the unique position Indian Point is
25 geographically for the United States, so really that's

1 why Ed and his team -- I'll call it looking at the
2 functions of getting the relicensing; not the technical
3 aspect as much -- but it affords myself, my team to
4 really focus on the tactical and strategic safe and
5 reliable operation of the plant. So it really is great
6 support that we get from the entire organization.
7 That's all I have to add. Thank you.
8 MR. DACIMO: That completes your
9 presentation.
10 MEMBER STETKAR: Great. We're running a
11 little long. I should have taken a break at 10:00 when
12 I first thought about it, but since I didn't, we're
13 going to muster through here.
14 What I'd like to do is do any of the members
15 or consultants have any further questions for Entergy?
16 (No audible response)
17 MEMBER STETKAR: I believe -- I believe a
18 lot of things. I believe that Dr. Corradini may be on
19 the bridge line, and I also believe that the bridge line
20 is open. Both of those beliefs may be false.
21 What I'd like to do is first ask, Mike, are
22 you out there?
23 (No audible response)
24 MEMBER REMPE: He sent an email indicating
25 he had to go to class.

1 MEMBER STETKAR: Mike is not out there.
2 Good.
3 Then what I'd like to do is, as Dick
4 mentioned earlier, open up the floor first in the room
5 for any comments from the public at this stage. There
6 will be another opportunity after the staff finishes
7 their presentation for public comments, but this is
8 kind of an interim opportunity. If any member of the
9 public is available in the room and would like to make
10 a comment, come up to the microphone, identify yourself
11 and do so.
12 (No audible response)
13 MEMBER STETKAR: Okay. Now, this is an
14 indication of our high-tech environment here in the
15 ACRS. If someone is out there on the bridge line, could
16 you do me a favor and just say "Hello?" It's the only
17 way that we actually positive indication that the
18 bridge line is open. So, anyone out there, just please
19 just say "hello" so I know it's open.
20 PHONE PARTICIPANT: Hello.
21 MEMBER STETKAR: Thank you.
22 PHONE PARTICIPANT: It's working.
23 MEMBER STETKAR: Thank you. Excellent.
24 That's good enough.
25 Now, if there's a member of the public on

1 the bridge line who would like to make a comment, please
2 identify yourself and do so.
3 (No audible response)
4 MEMBER STETKAR: Hearing nothing; and as
5 I said, there will be another opportunity for comments
6 this afternoon, we'll close the bridge line. Thank you
7 to Entergy, Indian Point for a good discussion. Really
8 appreciate the effort you put into this.
9 We will take a break until 10:45.
10 (Whereupon, the above-entitled matter
11 went off the record at 10:26 a.m. and resumed at 10:47
12 a.m.)
13 MEMBER STETKAR: Let's come back into
14 session. We will start the -- we do have latitude as
15 a subcommittee to adjust the schedule. The Full
16 Committee we have less latitude in adjusting the
17 schedule. So what we'll do is start the staff's
18 presentation now despite the fact that our agenda shows
19 it starting after lunch; try to get to a convenient
20 stopping time for the benefit of the folks out on the
21 bridge line who are listening in. Give you an idea of
22 what the schedule will be.
23 So we'll break for lunch at a convenient
24 stopping point and then pick up the staff's
25 presentation this afternoon and then again open up the

1 line for public comments after the staff is finished.
2 And with that, Chris, I don't know if you
3 want more introductory remarks.
4 MR. MILLER: Just a few introductions.
5 MEMBER STETKAR: Okay.
6 MR. MILLER: Thank you. Staff's
7 presentation on Indian Point Units 2 and 3 Supplement
8 2, Safety Evaluation Report will be presented -- led
9 by Kim Green, sitting there on the front. She'll be
10 joined by Project Manager Mike Wentzel. I have Doug
11 Pickett, the DORL project manager, sitting next to me
12 here. Senior Reviewer Jeff Poehler. Also Dr. Allen
13 Hiser, our senior technical advisor is over there in
14 the corner. And we have Mel Gray, branch chief from
15 Region I, and Mike Modes, inspector from Region I that
16 has come down to present the inspection program issues.
17 So with that, I'll turn it over to Kim.
18 MS. GREEN: Okay. Good morning, Mr.
19 Stetkar and members of the License Renewal
20 Subcommittee. As Chris indicated, my name is Kim Green
21 and I'm the former license renewal project manager for
22 Indian Point Nuclear Generating Units 2 and 3, License
23 Renewal Safety Review. Members of NRR and Region I are
24 also here with me to provide you with a status briefing
25 of the staff's ongoing review of the Indian Point

1 license renewal application. And he already gave the
2 introductions to all of the staff that are joining me,
3 so I'll forego that. Also seated in the audience are
4 members of the technical staff who also participated
5 in the review of the license renewal application.
6 So I'll begin our presentation by
7 providing a brief history of the license renewal
8 application, or LRA, and the staff's review thereof.
9 Next I will discuss the timely renewal activities that
10 have occurred for IP2. And then Mr. Mel Gray will
11 discuss the license renewal inspections that were
12 conducted in anticipation of IP2 enter the period of
13 timely renewal. And then I will discuss the staff's
14 review of information it has received since August 2011
15 as documented in Supplement 2 to our Safety Evaluation
16 Report. Then Jeff Poehler will discuss the staff's
17 review of the Reactor Vessel Internals Inspection Plan
18 and Program. And then lastly I will touch on the
19 continuing review of the Indian Point license renewal
20 application.
21 Entergy Nuclear Operations submitted its
22 license renewal application by letter dated April 23,
23 2007, eight years ago today. The LRA was supplemented
24 by letters dated May 3rd and June 21st, 2007. The May
25 3rd supplement clarified the term "Indian Point Energy

1 Center Units 2 and 3" as synonymous with "Indian Point
2 Nuclear Generating Units 2 and 3." And then the June
3 21st, supplement added a commitment regarding the
4 installation of the Unit 2 station blackout Appendix
5 R diesel generator by April 30th, 2008.
6 Since the submittal of the LRA Entergy has
7 submitted 16 amendments to its application. These
8 were submitted primarily to document notable changes
9 to the LRA, including those in the annual updates. The
10 expiration dates for Indian Points 2 and 3 were
11 mentioned previously, but they're licenses are still
12 current.
13 The staff completed its initial review of
14 the Indian Point 2 and Indian Point 3 license renewal
15 application and documented its findings in a Safety
16 Evaluation Report that was issued in August of 2009.
17 The staff presented its findings to the ACRS Full
18 Committee in September of 2009, and after receiving a
19 letter from the ACRS the staff published its Safety
20 Evaluation Report and the ACRS letter in NUREG-1930.
21 It consisted of two volumes.
22 Following the publication of the SER, the
23 staff continued its review of information provided by
24 Entergy in the form annual updates, which are required
25 by 10 CFR 54.21(b). Additionally, in December of 2010

1 the staff issued Revision 2 to the Standard Review Plan
2 for the review of license renewal applications for
3 nuclear power plants, known as NUREG-1800, or the SRP,
4 and Revision 2 to the Generic Aging Lessons Learned
5 Report, or GALL, also known as NUREG-1801.
6 Revision 2 to the GALL Report contained
7 changes to several Aging Management Programs that were
8 deemed necessary based on operating experience
9 identified since the issuance of the previous revision
10 of the GALL Report. As a result, the staff issued
11 requests for additional information to all applicants
12 who had license renewal applications under review and
13 asked that they address the industry operating
14 experience and identify any changes to their programs
15 that they deemed necessary.
16 Entergy's response to the request for
17 additional information regarding the operating
18 experience that resulted in the issuance of GALL Rev
19 2 and the annual updates sent in December of 2009 and
20 2010 were reviewed by the staff. The staff's
21 evaluation and findings regarding that information
22 were documented in Supplement 1 to NUREG-1930 and it
23 was published in October of 2011. Supplement 1 to the
24 SER was forwarded to the ACRS for its consideration,
25 and the ACRS did not request a briefing at that time.

1 This past November the staff issued
2 Supplement 2 to the SER. The supplement documents the
3 staff's evaluation and findings of information
4 submitted by Entergy in the form of annual updates that
5 were sent in December of 2011, 2012, 2013 and also in
6 September of 203. Also, it contained responses to RAIs
7 regarding those updates and Entergy's Reactor Vessel
8 Internals Inspection Plan and Program.
9 The staff will cover this particular document in
10 greater detail a little later on in our presentation.
11 In addition to the staff's evaluation
12 documented in the SER, the IP2 and IP3 LRA has subject
13 to an ongoing evaluation of the environmental impacts
14 of license renewal, as well as the adjudication of a
15 number of contentions related to the LRA. The staff's
16 initial evaluation of the environmental impacts of
17 license renewal is documented in Supplement 38 to
18 NUREG-1437, which was published in December of 2010.
19 The staff supplemented its evaluation in
20 June of 2013 to address new information pertaining to
21 the impacts on aquatic species and plans to issue an
22 additional supplement in March of 2016 to address new
23 information available since then.
24 As for the adjudication of the contentions
25 submitted against the LRA, the Atomic Safety and

1 Licensing Board held hearings on nine of the
2 environmental and safety contentions in October and
3 December of 2012, and the ASLB will schedule a hearing
4 for the remaining three safety contentions later this
5 year. I think you heard from Entergy that that's
6 scheduled, it will be scheduled for November this year.
7 So as I mentioned a few moments ago, the
8 operating license for Indian Point 2 was set to expire
9 at midnight on their expiration date, which was
10 September 28, 2013, however, the current operating
11 license for Indian Point 2 is still active. And that's
12 due to the Administrative Procedure Act, which was
13 enacted by Congress back in 1956. It provides minimum
14 procedural standards that federal administrative
15 agencies must follow.
16 That law states that when a licensee has
17 made timely and sufficient application for renewal or
18 a new license in accordance with the Agency rules, a
19 license with reference to an activity of a continuing
20 nature does not expire until the application has been
21 finally determined by the Agency. The NRC's
22 codification of the Administrative Procedure Act is in
23 Title 10 to the Code of Federal Regulations in Part 2.
24 Specifically 10 CFR 2.109(b) states that if the
25 licensee of a nuclear power plant files a sufficient

application for renewal at least five years before the expiration of the existing license, the existing license will not be deemed to have expired until the application has been finally determined.

Entergy submitted its application in 2007, and that was at least five years in advance of the expiration date. So the staff accepted the license renewal application on July 25th, so that documented that it was sufficient. Therefore, Entergy met both of the conditions of the regulation, so they're allowed to continue to operate under its existing license. And as mentioned earlier by Chris, because the license is allowed to continue to operate under its existing license, the licensee must continue to meet all the applicable regulations and license condition of its license.

MEMBER RICCARDELLA: Excuse me. I have a question. This timely renewal concept, is this fairly common in license renewal, or is there something unique in this Indian Point application?

MS. GREEN: Right now it's unique to Indian Point Unit 2. It almost happened on Oyster Creek. I think they got their license renewed on the day that their license was set to expire. But right now this is the only commercial nuclear power plant that

1 is in timely renewal. Or as Entergy -- it's a period
2 of extended operation, but they don't have a renewed
3 license.
4 MEMBER RICCARDELLA: And is there
5 something unusual in the timing? Is that because of
6 these other contentions that you referred to that's
7 making it take so long?
8 MS. GREEN: That is the primary reason.
9 MEMBER RICCARDELLA: Thank you.
10 MS. GREEN: So the staff was not -- was
11 aware -- we were aware, not aware -- the staff was aware
12 that it would not be able to grant the renewed license
13 to Indian Point 2 prior to September 28th, 2013.
14 Therefore, we engaged the licensee to determine what,
15 if any, actions it planned to take regarding the
16 implementation of aging management activities. So by
17 letter dated May 1st, 2013 Entergy voluntarily
18 committed to fully implement all of the IP2 license
19 renewal commitments that were required to be
20 implemented prior to entering into the PEO; that is,
21 by September 28th, 2013, and to update the Unit 2 UFSAR
22 to include the Unit 2 Aging Management Programs into
23 the licensing basis prior to September 28th, 2013.
24 Then on August 28th, 2013 Entergy did
25 notify us that it implemented the license renewal

1 commitments for IP2. That was in a letter. And then
2 for our part, the NRC's part, the staff sent a letter
3 to Entergy on August 19th, 2013 in which we confirmed
4 that the actions proposed by Entergy and clarified how
5 the changes regarding the license renewal should be
6 handled. In addition, Region I staff conducted
7 license renewal commitment inspections under Temporary
8 Instruction 2516 entitled, "The Review of License
9 Renewal Activities."
10 And so, at it's at this time that I'd like
11 to turn the presentation over to Mel Gray, who will
12 discuss the region's inspection activities related to
13 the timely renewal of Indian Point 2, as well as the
14 Indian Point site overall.
15 MR. GRAY: Thank you. I am Mel Gray,
16 branch chief out of NRC Region I. I've been in this
17 position, Engineering Branch 1. We have
18 responsibility for the license renewal-related
19 inspections for Region I plants. We also have
20 material-related inspections, in-service inspections
21 out of my branch. So, I think it's a good connection.
22 I wasn't in the branch when we did these
23 inspections, but prior to this position I oversaw the
24 Division of Reactor Projects, Indian Point, and the
25 resident inspector, so I do have a touch on a lot of

1 this. But I do have Michael Modes with me. He's a
2 senior inspector of my branch, a materials background,
3 very high level, and was a member of the team. And so
4 between us we can hope to tag team back to these
5 inspections to answer your questions.
6 So, next slide? Thank you. And if
7 there's questions, I guess you'll just bring them up.
8 Before I start, for operating reactors our
9 inspection regime is described in Manual Chapter 2515.
10 If you ever look at that, you have Appendix A, which
11 is our baseline inspections. Those are inspections
12 that every plant gets no matter how well they perform
13 or not so well. And that includes Indian Point over
14 these years.
15 Appendix B is supplemental inspections.
16 Those are for-cause inspections. If performance
17 degrades in terms of findings of greater safety
18 significance or performance indicators that toggle to
19 non-green condition, they would merit additional
20 supplemental inspections. And I'm quickly covering
21 this just to make sure we're on the same page.
22 Finally, there's Appendix C, Infrequent
23 Inspections. And if you look at that list, it includes
24 steam generator replacements, vessel head replacements
25 and license renewal. So that is where you'll find the

1 Inspection Procedure 71003. And that was intended to
2 be completed with the Agency makes a decision about a
3 license renewal application. It was intended to be
4 completed between that time and before the period of
5 extended operation to give us a very good handle, a good
6 sense that the commitments are being implemented as
7 described in the application, as intended and that we
8 have an independent review of that.
9 And that was intended to be done prior to
10 40 years ending. We found out, as was mentioned in a
11 question response here that Oyster Creek gave us the
12 impetus that we needed to do something different
13 because there may be plants that meet the regulatory
14 timely renewal factors and therefore they warrant that
15 process being implemented. And that's indeed where we
16 are with Indian Point.
17 So, then I'll start with my slide.
18 Temporary Instruction 2516 is intended to accomplish
19 that. And really it is intended to implement all the
20 processes, all the inspection requirements of 71003 for
21 a plant that finds itself in timely renewal, give us
22 an opportunity to review, to document our conclusions
23 prior to the licensee entering the period of extended
24 operation, understanding the special conditions that
25 we're in.

1 So for Indian Point Unit 2 we in Region I
2 completed three inspections. The first one was in
3 March of 2012. That was during a refuel outage. That
4 consisted of two individuals on site. During the
5 outage it gave them an opportunity to get into areas
6 of the plant that -- containment and other areas,
7 high-rad areas that could not normally be seen. And
8 by a review of procedures, interfaces with plant
9 personnel and actual observations, they reached
10 conclusions. They looked at six commitments. They
11 found that four were good to go. They've seen enough
12 actual implementation that we think they didn't warrant
13 further review. Two needed more review. So that was
14 in March 2012.
15 In May of 2013 while the plant was
16 operating we had an nine-person team inspection visit
17 the site, and that was a very involved inspection. Any
18 time you have nine inspectors on site for a team, that's
19 a lot of looks. And indeed, the team was able to look
20 at 41 commitments. Thirty were deemed to be
21 implemented satisfactorily. Eleven warranted
22 additional review. And so, that was the footprint
23 there, inspection footprint.
24 Finally, we circled back prior to the
25 period of extended operation for Unit 2 in September

1 2013. We looked at 10 commitments. One, we've talked
2 about Commitment 47, wasn't inspectable at that time.
3 Now, what were our conclusions? It sort
4 of doesn't do it justice when I just say "no findings
5 identified." If you look at our cover letters, we
6 found that in the totality of our reviews that the
7 commitments were being implemented consistent with
8 their representation to us in the application. And
9 when we say the words, "no findings," it means that for
10 the results that they found that under the current
11 licensing basis we did not see degrees of degradation
12 that resulted in findings that would be more than minor.
13 That's saying a lot in one bullet there, but that is
14 an important conclusion.
15 And indeed, we have one more inspection
16 still to be completed. Our Inspection Program calls
17 for a look at Indian Unit 3 prior to its entering the
18 period of extended operation to look at the commitments
19 that have some uniqueness to Unit 3 or that we feel need
20 to be re-looked at for some reason. And that's in our
21 purview. So we're still planning that inspection, but
22 it is intended to be covered this fall.
23 MEMBER STETKAR: I really like reading the
24 Inspection Reports because it's where we actually can
25 read reality rather than commitments.

1 MR. GRAY: Thank you.
2 MEMBER STETKAR: You're welcome. And
3 then tend to be very good.
4 MR. GRAY: Actually that's --
5 (Simultaneous speaking)
6 MEMBER STETKAR: And I'm not just -- they
7 are. I really like -- I think they're very, very
8 useful, from my perspective anyway, which brings me to
9 the last bullet here. What's your schedule? It says
10 fall. Do you know when yet? And it's just going to
11 be one inspection?
12 MR. GRAY: I do know when. Every six
13 months we do put out an integrated inspection report
14 so our stakeholders understand what we're going to do.
15 And we had this scheduled I believe on December 5th.
16 It has recently been moved back to October 5th. And
17 that will be updated in our --
18 MEMBER STETKAR: It's October?
19 MR. GRAY: October.
20 MEMBER STETKAR: The reason I bring it up
21 is I think several of the members on the Subcommittee
22 at least do find those inspection reports useful. And
23 I know that I at least, and probably several other
24 members, would be very interested in seeing that when
25 it's available. So we want to make sure that we

1 coordinate that with --

2 (Simultaneous speaking)

3 MR. GRAY: Okay.

4 MEMBER STETKAR: Whether or not we need

5 another Subcommittee meeting is pure speculation, but

6 I know that we'd like to take a look at that because

7 they are very, very useful.

8 MR. MODES: Forty-five days after the

9 inspection is completed is when --

10 (Simultaneous speaking)

11 MEMBER STETKAR: That's what I was trying

12 to get, a feel for the --

13 MR. MODES: So if you're planning, right?

14 MEMBER STETKAR: Yes. As I said, whether

15 there's anything in there that would merit a formal

16 Subcommittee meeting is something -- we'll take a look

17 at it, I think, and see so we understand what comes out

18 of the inspection and then go forward.

19 MEMBER SCHULTZ: Mel, you made a point

20 about Indian Point 2 that the March 2012 inspection was

21 done during a refueling outage and allowed you access

22 to areas that were important to view and inspect with

23 regard to commitment. Was any related inspection done

24 for Unit 3 during the recent outage, or was there some

25 determination made that it wasn't necessary to do so

1 to look during the outage for Unit 3?
2 MR. GRAY: Unit 3 was in a refuel about a
3 month ago.
4 MEMBER SCHULTZ: Right.
5 MR. GRAY: The baseline was inspectors
6 -- inspection was accomplished there. I don't think
7 that any of the commitments were unique that we needed
8 to lay eyes during the outage. Having said that, my
9 inspector -- we did an ISI inspection, in-service, and
10 it was mentioned on Unit 3 they removed the thermal
11 panels and they looked at the liner.
12 MEMBER SCHULTZ: Yes.
13 MR. GRAY: We would normally take an
14 opportunity to take that as a sample under ISI. Are
15 they implementing the ASME Code requirements for that?
16 And indeed I looked at those myself because that is an
17 opportunity, as did my inspector. So, I can't say that
18 there was no -- if you look on the books, no license
19 renewal inspection, but when there is an unusual --
20 MEMBER SCHULTZ: That's why I asked were
21 there related inspections done that you would --
22 (Simultaneous speaking)
23 MR. GRAY: That one comes to mind.
24 MEMBER SCHULTZ: Okay. Then there's an
25 example?

1 MR. GRAY: And we'll document the
2 conclusions there that they implemented their program
3 appropriately for those.
4 MEMBER RICCARDELLA: You say you
5 witnessed that inspection?
6 MR. GRAY: I looked at those myself in the
7 containment with my inspector in an oversight role.
8 MEMBER RICCARDELLA: Thank you.
9 MR. GRAY: I think there's interest in
10 also the performance of Indian Point from the staff's
11 perspective, so I won't belabor this. It's just to
12 ensure common understanding and to refresh people's
13 memory here in the meeting.
14 This is our oversight process in Manual
15 Chapter 0305. It begins with strategic performance
16 areas, and those of course are reactor safety,
17 radiation safety and security. Our Inspection Program
18 is represented on the one side here, the baseline
19 inspection results. Any licensee receives the full
20 complement of baseline inspections. If there are
21 findings that are more than minor, they are documented
22 and they receive a significance review in terms of
23 safety.
24 That's what raises the significance
25 determination process or risk-informed process. And

1 they're assigned colors of green, white, yellow and
2 red. The vast majority of findings are green, which
3 is good and appropriate for a defense-in-depth approach
4 to regulation. But if there are higher significance
5 findings, they are entered into an action matrix which
6 is Manual Chapter 0305.
7 And on the right side, this morning we
8 talked about performance, plant performance. The
9 staff monitors a suite of indicators for performance.
10 That's already been discussed. It is unplanned trips,
11 trips with complications. And that gets at the
12 connectivity to routine operation not challenging
13 safety systems. That's our interest.
14 In addition, there's performance
15 indicators for mitigating systems. That gets into
16 that. And also moving on to public and occupational
17 radiation safety. And finally EP, emergency
18 preparedness. And finally security. So I've just
19 described the six safety cornerstones there. They're
20 covered both by performance indicators and
21 complemented by our Inspection Program. Actually,
22 it's the other way around, I would think. But the
23 action matrix then drives our regulatory response, and
24 that is our view of any plant's performance. That is
25 our conclusion.

1 So, next slide? For Indian Point, looking
2 back I understood that the last time you really had a
3 meeting on Indian Point was 2009. So this slide
4 provides the action matrix that we utilize, the staff
5 utilizes. And as a plant performance degrades in terms
6 of safety or security, they would move across that
7 action matrix and receive more inspections, more
8 oversight, more attention from NRC staff and
9 management.
10 At Indian Point they have for the last
11 -- since 2009 mostly been in the licensee response
12 column. And what that means is the findings -- there
13 are findings. There are violations. They were very
14 low safety significance. And the suite of performance
15 indicators was by and large in the green band, which
16 is where we'd expect most plants to be.
17 Unit 3 did toggle there to the regulatory
18 response column. And that was for white performance
19 indicators for unplanned trips. I believe they had
20 four back in the space of year. And I don't recollect
21 what they were. Two I believe might have been
22 electrical. But those subject to an additional
23 supplemental inspection done by a team of inspectors,
24 who -- after the licensee was done their root cause and
25 corrective actions, they had a chance to look at that

1 and they made conclusions that overall the corrective
2 actions were appropriate. And indeed, the licensee
3 has -- performance has borne them out and that they have
4 remained in the licensee response column since then.
5 Having said that, every year we describe
6 your -- if you could back one, please? Thank you. For
7 2014, we're at the end of the year. We're about to have
8 an annual assessment meeting for Indian Point where we
9 will publicly describe these conclusions. And so,
10 this is in essence what we'll say in more detail there.
11 But Indian Point Unit 2 and 3 were in the licensee
12 response column, therefore they warrant the full range
13 of baseline inspections. And because they're in
14 license renewal, the regional administrators
15 authorized us to continue to complete license
16 renewal-related inspections, which are infrequently
17 performed.
18 At Indian Point we have three resident
19 inspectors on site. In addition, team inspections
20 including my inspectors. The 8,300 approximate hours
21 were spent there in inspection. And based on that, we
22 had 13 findings. They happened to be of low safety
23 significance this year. And I did take a look -- the
24 staff doesn't -- we don't count findings, but if you
25 ask me, they had about 20 historically between both

1 units. And so, there's been somewhat of a moderation
2 in the last couple years, where we have 13 this year.
3 I asked my staff to take a retrospective
4 look at those, and I think there's interest in material
5 condition of the plant being this is license renewal.
6 Those are about the typical number of findings for a
7 dual-unit site. Over the years, since 2009, I think
8 my staff picked out five that had connectivity to
9 material degradation issues. So when I looked at that,
10 I don't think that this plant is either much better or
11 much worse than -- they're about where you expect a
12 licensee response column plant to be, that the number
13 of findings are not -- there's not a preponderance of
14 evidence that they're material-related, but there's
15 not zero either. And I think that's what I can glean
16 from that.
17 MR. BARTON: What's your conclusion
18 regarding the material condition of that plant, both
19 units?
20 MR. GRAY: I've looked at both units.
21 I've had opportunity to go up there over the years.
22 This is our conclusion about their safety performance.
23 When I look at the plant, it has some years on it, but
24 the essential material conditions that are important
25 to safety appear to be maintained. That's our

1 conclusion. We have some findings once in a while that
2 are of a very low safety significance where attention
3 is warranted on their part in corrective action. And
4 we ensure that occurs, but the barriers, reactor
5 coolant system, containment, the material condition of
6 frontline safety systems appears to be maintained
7 appropriate for the safety standards.
8 MR. BARTON: Sometimes I think about what
9 are the outbuildings away from the power block and what
10 do they look like? And also I think about the overall
11 management look at my site, the material condition.
12 And sometimes they are connected. You look at
13 outbuildings and they're a mess and you say, well,
14 that's telling me something about the management of
15 this site. So when you look at material condition, I
16 always wonder if you look at outer buildings outside
17 the power block itself to determine what you think is
18 going on there.
19 MR. GRAY: I would agree with that. The
20 areas that are trodden well get more attention, but I
21 think our inspectors do a good job crawling around.
22 There are some findings that have come from that and
23 by and large we find that for safety outbuildings
24 -- we're talking about structural intake structures.
25 Very important, right?

1 MR. BARTON: Right.

2 MR. GRAY: They get the attention that's
3 warranted. Sometimes we have to engender further
4 attention. And we've documented those in a few
5 findings. But I think it's important. It was
6 discussed this morning, the reactor cavity leak. We
7 looked at that hard both in terms of current licensing
8 basis and in license renewal, and we talked to each
9 other, hence that issue. But it's important to -- when
10 you have your team of contributors, your plant staff
11 is working and it's a wet environment. That's sends
12 a message to them of how much management cares or not
13 cares about the environment. And I think it's been a
14 long time getting at that. Leaks are hard to get at
15 at reactor cavities. I agree with that. But that
16 warrants attention. I think there's progress being
17 made. And that's appropriate because that gives
18 messages to the plant staff.

19 MR. BARTON: Okay.

20 MR. GRAY: That's my personal
21 professional opinion.

22 MEMBER STETKAR: I'm sandbagged a little
23 bit here. We've talked about the buried piping
24 inspections, Entergy's buried piping inspections this
25 morning a little bit, and I know you audited the

1 inspections that they had done. In the inspection
2 report -- now they talked about a smart sample. They
3 said we looked at the estimated risk of corrosion, if
4 I can use that word in a general sense, and they also
5 looked at the potential consequences of failure of
6 piping. So for example, a safety-related service
7 water piping would have a higher risk ranking than
8 perhaps another piping section.
9 In your inspection report you say the
10 inspectors confirmed that the corporate procedures
11 included criteria for assessing buried in-scope piping
12 segments and tanks based on the impact of leakage and
13 conditions affecting risk for corrosion and that indeed
14 the Inspection Program contained a list of sections to
15 be inspected. Did your inspectors audit the actual
16 risk assessments that were done to see whether they made
17 any sense? In other words, application of the criteria
18 to come up with a list in their procedure? And if not,
19 who does that?
20 MR. MODES: Okay. So, although I wasn't
21 the team lead for this inspection, I'm sitting here as
22 he retired. The answer is yes. I can't tell you that
23 it was specifically done in this case, but in general
24 we do look at how those risk rankings are arrived at,
25 as long as you understand that the EPRI program that

1 envelopes this Aging Management Program is different
2 for the utilities than it is for us. They assign a
3 definition of risk that includes public profile. In
4 other words, they'll look at a piping system under the
5 EPRI program differently for risk than we do, but we
6 take that all into account.
7 MEMBER STETKAR: Yes, I mean, I don't
8 particularly care -- somebody comes up with a list of
9 criteria: A, B, C, D.
10 MR. MODES: Right.
11 MEMBER STETKAR: These are my criteria.
12 And then somebody says, well, I applied that criteria.
13 I went through a process. And because of those
14 criteria I now have a list of piping that's rank ordered
15 that I ought to look at piping section XYZ-37. Pay more
16 attention to that than XYZ-238.
17 What I'm asking about is, and what I think
18 I heard you say is does the NRC -- your inspectors audit
19 that intermediate evaluation to say, well, indeed going
20 from the criteria to that list seems to make sense.
21 MR. MODES: Yes, we do.
22 MEMBER STETKAR: You do? Okay.
23 MR. GRAY: I think that also occurs -- we
24 had a temporary instruction for buried pipe. There's
25 an initiative by the industry. And that occurred also

1 outside of a per se license renewal essentially.
2 MEMBER STETKAR: But all I'm trying to do
3 is probe, because in the inspection report all it said
4 is, well, here in a corporate procedure there are some
5 criteria. And then we looked at the plant-specific
6 Inspection Program and there's a list that was somehow
7 derived from that criteria somehow.
8 MR. MODES: So what you're asking does --
9 MEMBER STETKAR: So I'm probing --
10 MR. MODES: -- do we look at it --
11 MEMBER STETKAR: Okay. into the "somehow"
12 part of it.
13 MR. MODES: Right. Do we look at it and
14 ask ourselves does that list make sense?
15 MEMBER STETKAR: Right. Exactly.
16 Exactly.
17 MR. MODES: And the answer is of course,
18 yes.
19 MEMBER STETKAR: Okay. Thank you.
20 That's a confidence builder.
21 One other question. This is on the
22 one-time inspections, which we also discussed and
23 probably will for a different reason this afternoon,
24 but I have the inspection folks here.
25 On Unit 2 -- and I actually don't know how

1 these populations are derived, but the inspection
2 report says for Unit 2 there were -- this is now
3 Entergy's inspections. They performed about 300
4 inspections to cover existing Aging Management
5 Programs; that would be the Water Chemistry Programs,
6 the fuel oil monitoring -- all of the stuff that they
7 had in place, and an additional 120 inspections on
8 complements specified in the license renewal
9 application, which are those things that I guess
10 -- perhaps the example that we're talking about this
11 morning with the service air line, operating
12 experience-driven types of environments and materials
13 that may not have been covered under some of the plant's
14 existing programs.
15 Now, when you go out you don't look at all
16 of those 400 or so inspections. You audit a bunch of
17 those inspections. How do you determine the
18 population of inspections that you audit? You just
19 take a 10 percent sample and say they did 400 and we'll
20 just take 40 randomly-selected -- because I think you
21 did -- you audited 20 in one inspection; you audited
22 20 in a different, which is about 10 percent of the
23 total. Is it just a random sample or is it a smart
24 sample of the inspections?
25 MR. MODES: Yes, so in this case, in this

1 particular case it was Glenn Meyer, who's retired,
2 right?
3 (Laughter)
4 MR. MODES: He was very passionate about
5 this particular subject.
6 MEMBER STETKAR: Okay.
7 MR. MODES: And he pretty much owned it.
8 There was a man with over 40 years experience as a
9 nuclear regulator, and he determined pretty early on
10 in the license renewal process that there was a fallacy
11 in trying to apply a probability of 90/90 to a
12 population of components that you cannot randomize.
13 And to say that you're picking them randomly he thought
14 was just absurd. So the idea that you say, well, I've
15 randomized a population that starts with the idea I
16 already selected a component type, I mean, that -- and
17 then you go on to claim that you've got 90/90, he found
18 unsettling.
19 And so, what he did is he would select
20 samples based on his experience with these aging
21 effects. And in so doing his constant doing of this
22 in the inspections, what he was trying to do was to get
23 the industry to be smart about their samples and to
24 focus on where they knew the aging was. And he used
25 leaching as the object of this experiment. He kept

1 going back to getting industry to look at the
2 possibility that they had leaching, when in many places
3 you went to they were in total denial. We don't have
4 the right combination. And we've -- somebody said you
5 could hammer them. Of course you can. So they would
6 go out and ping them and, oh, look, everything's fine.
7 He's the guy who got them to cut this stuff up.
8 And so, to answer your question directly,
9 the samples that were chosen for your our inspection
10 were done on a very informed and very smart basis.
11 MEMBER STETKAR: Okay. I'm glad to hear
12 that because if I were looking for things, I wouldn't
13 look -- in fact the 400 things that were covered by their
14 existing programs, the likelihood is that the programs
15 are probably pretty well working. I'd certainly look
16 more carefully at the ones that were --
17 MR. MODES: Right.
18 MEMBER STETKAR: Especially because it's
19 a one-time --
20 MR. MODES: Right.
21 MEMBER STETKAR: -- snapshot.
22 MR. MODES: Glenn knew where the skeletons
23 were.
24 MEMBER STETKAR: Okay. Good. I hope
25 that now that Glenn is sitting on a beach some place

1 that that philosophy --

2 MR. MODES: No, he's baby sitting as a

3 matter of fact.

4 (Laughter)

5 MEMBER STETKAR: -- there seems to be a lot

6 of that going around -- that that's carried forward.

7 And it isn't just Region I, but it's --

8 MR. MODES: I can only speak for this

9 region, and the crusty old inspectors who are in it.

10 And so, yes, we try to be as focused and as informed

11 as we possibly can be.

12 MEMBER STETKAR: Thank you. You had a

13 question?

14 MEMBER REMPE: Well, actually the

15 knowledge transfer is what I was going to ask. Is the

16 knowledge being transferred at headquarters to other

17 regions somehow or other?

18 MR. MODES: From headquarters to the

19 regions?

20 MEMBER REMPE: So, from Region I does it

21 get back to headquarters?

22 (Laughter)

23 MR. MODES: Oh, the other way around?

24 (Simultaneous speaking)

25 MEMBER REMPE: But I'm trying to --

1 (Simultaneous speaking)
2 MEMBER REMPE: -- and it's probably not
3 you who should answer the question, but someone from
4 headquarters, to say, oh, yes, realize that and it's
5 being transferred.
6 MR. MILLER: We do have opportunities
7 across the --
8 (Laughter)
9 MR. MILLER: -- to share. And we have
10 counterparts --
11 MEMBER REMPE: Yes, and it is being --
12 (Simultaneous speaking)
13 MR. MILLER: -- meetings. We share
14 information. We try to take the best of some of the
15 inspection activities. I believe Michael was
16 responsible for writing a -- for TI inputs, temporary
17 instructions.
18 MR. MODES: So seriously --
19 MEMBER REMPE: Yes.
20 MR. MODES: Seriously, we have a process
21 where -- it's called a Report of Interaction. That's
22 the one he's also referring to. So what happens is,
23 for example, in the case of Nelson Azevedo and a
24 particular program that he had, there was a difference
25 in the way the ASME Code would view a particular program

1 and the way License Renewal would view that same
2 program. Sometimes the feature of an aging management
3 -- don't strictly overlap the deterministic views of
4 the ASME Code.
5 And so I issued -- I wrote a lengthy
6 dissertation about what I had seen. And it's a formal
7 process for asking License Renewal what do you think?
8 This is a higher-level policy decision made on your
9 part. So there's this Report of Interaction. And it
10 is published. You can go to the Web site SharePoint
11 and you can find a list of these as all of the regions
12 write them up and submit them to License Renewal.
13 In addition to which we have a regular, now
14 quarterly; it used to be monthly when there was a lot
15 of activity in License Renewal, where all of the regions
16 and the staff of License Renewal get together with an
17 agenda and we discuss maybe the Reports of Interaction.
18 What do they mean? What are the intents? Interim
19 Staff Guidance that are being worked on so that we have
20 leading indicators. Here's what's coming down the
21 road. Here's what we're thinking. And then we will
22 tell them, wait a minute, here's what we're seeing. It
23 might not fit that ISG exactly.
24 We have annual meetings where we come
25 together face to face and sit down and -- 71003, we sat

1 down, locked ourselves in a conference room for a couple
2 days, and wrote a procedure to satisfy the needs of the
3 Agency to verify that commitments were being
4 implemented in an orderly fashion before they got them.
5 So, this goes on all the time.
6 MEMBER REMPE: Thank you.
7 MR. MODES: And I would add not just in
8 License Renewal. I also have to participate in what
9 we call a materials engineering counterpart call with
10 Dr. Hiser and others in the area of corrosion, ISI, a
11 constant exchange of information. And, yes, the
12 Millennials are included in this.
13 (Laughter)
14 MEMBER REMPE: Thank you.
15 MEMBER SCHULTZ: That's where I wanted you
16 to get, Michael, because you made the statement earlier
17 that you knew what was happening in Region I, but not
18 what other regions were doing. But in fact based on
19 what you've just said --
20 MR. MODES: Yes.
21 MEMBER SCHULTZ: -- you do know and --
22 MR. MODES: There's a --
23 (Simultaneous speaking)
24 MEMBER SCHULTZ: -- you're sharing --
25 MR. MODES: Yes.

1 MEMBER SCHULTZ: -- your experience and
2 your best practices, and back and forth.
3 MR. MODES: I said I couldn't attest to
4 what they did. I know what they're --
5 (Simultaneous speaking)
6 MEMBER SCHULTZ: Understood. And to
7 reinforce what John brought up, we're glad to hear that
8 you're doing those two things. You're assuring that
9 the licensees' programs associated with license
10 renewal inspections, that that program is in place and
11 they're executing it properly and so forth through
12 inspection, and also beyond that looking at areas
13 associated with performance in the license renewal
14 realm in areas that the inspectors think are also
15 important. Good to hear.
16 MEMBER STETKAR: I need it over to
17 Kimberly.
18 MS. GREEN: Yes.
19 MEMBER STETKAR: I guess it's back to you,
20 Kim.
21 MS. GREEN: Back to me. Thanks, Mike and
22 Mel.
23 So the staff issued Supplement 2 to the SER
24 on November 6th, 2014. The primary reason for its
25 issuance was to document the staff's review of the

1 applicant's Reactor Vessel Internals Inspection Plan
2 and Program. It also includes the staff's evaluation
3 of changes to the LRA that were submitted to us mostly
4 in the annual updates that were sent in December 2011,
5 '12 and '13. And they submitted one in September of
6 2013 as well. That was primarily for Indian Point 2,
7 because that's when they were documenting completion
8 of the activities.
9 Also, the licensee or applicant documented
10 changes to its Buried Piping and Tank Inspection
11 Program. And I think they covered that sufficiently
12 this morning, but if you have any questions, I can
13 answer more in detail about what those changes
14 involved. And they also made change to two other AMPs.
15 And they covered those this morning as well. They were
16 the One-Time Inspection Program and the Selective
17 Leaching Program. They did not change any of their
18 time-limited aging analyses.
19 And our conclusion in the SER supplement
20 is that there's no change. We still hold to our
21 conclusion that was in the original SER issued in 2009.
22 Appendix A -- I'm sorry. Go ahead.
23 MEMBER STETKAR: Finish the last bullet
24 here.
25 MS. GREEN: The commitments?

1 MEMBER STETKAR: I was going to say the
2 slides were getting ahead of your speaking.
3 MS. GREEN: Oh, I'm sorry. We're having
4 -- it likes to jump without our touching it,
5 actually --
6 MEMBER STETKAR: Oh.
7 MS. GREEN: -- sometimes. So Appendix A
8 in the supplement has the list of their commitments.
9 And if you've looked at it, there's 50 in there, but
10 it's not a true 50. There's really 47. Three were
11 deleted. And if you want to know about which ones, I
12 could tell you, but they're marked. And I think they
13 covered Commitment 47 that was ultimately retracted or
14 deleted. And then they also covered Commitment 39,
15 which was the commitment to install the fixed fire
16 suppression system in the aux feedwater pump room at
17 Indian Point 2. That was deleted.
18 So, of the commitments that applied to
19 Indian Point 2 only three have not been implemented yet.
20 That's Commitments 41, 42 and 50. And then as Entergy
21 mentioned, several of their commitments have already
22 been implemented for IP3, and those are related to the
23 Aging Management Programs that are -- they cover both
24 units, so -- but of the ones that remain for Indian Point
25 3, they're going to be completed by December 12th of

2015 with the exception of two, and those are 41 and 42. Just for your knowledge, 41 and 42 are related to the inspection of the steam generator divider plate and the tube-to-tube sheet weld. And Commitment 50, which is only applicable to IP2, is the replacement of the split tins in the next refueling outage.

So, at this point we're going to talk about the Reactor Vessel Internals Inspection Plan, so --

MEMBER STETKAR: At this point we're going to take a break for lunch --

MS. GREEN: Awesome.

MEMBER STETKAR: -- because I don't want to break that discussion in the middle.

MS. GREEN: Okay.

MEMBER STETKAR: And I'm going to be real generous because I don't know what plans members of the public may have had related to the agenda, so what we'll do is recess for lunch until 1:00 and come back at 1:00 and pick up the internals and any other discussion then. So, we're recessed until 1:00.

(Whereupon, the above-entitled matter went off the record at 11:36 a.m. and resumed at 1:00 p.m.)

A-F-T-E-R-N-O-O-N S-E-S-S-I-O-N

MEMBER STETKAR: We are back in session, and we'll pick up with the Staff on the reactor vessel internals, I guess, unless there's something else that you wanted to talk about first. Okay.

MR. POEHLER: Thank you. I'm going to start with some background on the Indian Point 2 and 3 Reactor Vessel Internals Program.

Entergy submitted the license renewal application in April of 2007, and it referenced the GALL Report, Revision 1, which did not have a Reactor Vessel Internals Program, but instead the GALL Report, Revision 1 recommended that licensees make a commitment to implement the industry program for Reactor Vessel Internals no later than 24 months prior to the period of extended operation. So, that industry program was not ready yet, so that was the reason for not having a program and including a commitment, because the industry was still developing it. And that program was

1 submitted in the form of MRP-227, Revision 0 on
2 January 12th, 2009.
3 In August of 2009, the NRC Staff issued the
4 Safety Evaluation Report related to license renewal for
5 IP2 and IP3. Then in July of 2010, Entergy submitted
6 License Renewal Amendment number 9, which contained an
7 Aging Management Program for Reactor Vessel Internals
8 for Indian Point 2 and 3. And that was based on MRP-227,
9 Revision 0.
10 And this is not on my slide, but in December
11 2010, the NRC Staff issued GALL Revision 2 which did
12 contain a Reactor Vessel Internals Aging Management
13 Program, and that AMP referenced MRP-227, Rev. 0.
14 Then in June 2011, the Staff issued
15 Revision 0 of our Safety Evaluation related to MRP-227,
16 Revision 0. Next slide, please. So, in September of
17 2011, the applicant submitted a Reactor Vessel
18 Internals Inspection Plan based on MRP-227, Revision
19 0, and the Staff's Rev 0 SE of MRP-227, and that was
20 to meet the Commitment Number 30 date to submit two
21 years prior to the period of extended operation, so that
22 was two years prior to the start of the PEO for IP2.
23 Then in December 2011, the Staff issued
24 Revision 1 of our Safety Evaluation for MRP-227, which
25 incorporated some industry comments on Revision 1 of

1 the SE. January 2012, EPRI submitted MRP-227-A to the
2 NRC, which contained the Staff Safety Evaluation, and
3 also incorporated conditions from the Staff Safety
4 Evaluation. Then on February 3rd, 2012, the NRC sent
5 a letter to EPRI endorsing MRP-227-A for referencing
6 and licensing applications.
7 Two weeks later, the applicant submitted
8 an update to the RVI Inspection Plan, which was
9 consistent with MRP-227-A. They also submitted an
10 updated Aging Management Program.
11 Again, not on this slide, but in June 2013,
12 the NRC issued License Renewal Interim Staff Guidance
13 LR-ISG-2011-04, which basically updated the GALL Aging
14 Management Program to reflect MRP-227-A.
15 And, finally, on November 6, 2014 via the
16 issue of Supplemental Safety Evaluation Report 2, the
17 NRC Staff approved the Indian Point Units 2 and 3
18 Reactor Vessel Internals Inspection Plan and Aging
19 Management Program, and that made it the first RVI, or
20 Reactor Vessel Internals Inspection Plan that was in
21 accordance with MRP-227-A for a Westinghouse designed
22 reactor that has been approved by the NRC. Next slide,
23 please.
24 So, now I'm going to briefly describe the
25 process used by EPRI to develop the Aging Management

1 recommendations in MRP-227-A. So, the first step was
2 to identify the generic components for each PWR vendor,
3 Westinghouse, Combustion Engineering and B&W. And then
4 each of those components were screened for eight
5 different aging mechanisms, and those included stress
6 corrosion cracking, irradiation-assisted stress
7 corrosion cracking, irradiation embrittlement,
8 thermal embrittlement, wear, fatigue,
9 irradiation-assistant stress relaxation, and void
10 swelling.
11 The components are screened in for any of
12 those degradation mechanisms, were then put through a
13 process of failure modes effects and consequences
14 analysis, and based on that, what we call the FMECA
15 process, risk rankings were developed for each
16 component. And those risk rankings took into account
17 both the likelihood of an aging effect occurring in a
18 particular component, and also the likelihood that
19 those aging effects B- that if that aging effect
20 occurs, that it will cause a loss of function of that
21 component.
22 And then the FMECA results, plus some
23 analytical work for certain components more detailed
24 analysis work was done. And that was used to develop
25 the final inspection recommendations. So, all

1 components were assigned to one of four inspection
2 categories. And I'm going to talk more about those in
3 a later slide. Next slide, please.
4 This is a figure showing typical reactor
5 internals for a Westinghouse reactor. And I just want
6 to comment that all B- I have several figures in my
7 slides, and they're all generic MRP-227-A figures.
8 They're not Indian Point-specific figures, but that
9 said, they are B- Indian Point is very consistent with
10 the generic Westinghouse internals design. So, this is
11 just showing some of the major components of the
12 internals. And the major assemblies B-
13 MEMBER STETKAR: If you can use the mouse
14 or something. You have to stay fairly close to the
15 microphone so that can pick you up for the
16 transcription.
17 MR. POEHLER: That's true. That works.
18 MEMBER STETKAR: It does.
19 MR. POEHLER: Yes. It goes on all the
20 screens.
21 MEMBER STETKAR: It's amazing technology.
22 MR. POEHLER: Yes. So, the major
23 assemblies, you have the lower internals assembly,
24 which includes the core barrel. So, it pretty much
25 comprises this area. And it also includes the lower

1 support structure down here. You've got the lower core
2 plate. And then the upper internals assembly sits
3 inside that B- inside the top portion of the lower
4 internals. And that includes control rod guide tubes,
5 the upper core plate, the top support plate. So, those
6 are the major assemblies. Let's go back to the previous
7 slide. No, sorry, go forward to Slide 16.
8 So, now I'm going to discuss the MRP-227-A
9 component categories, or inspection categories. The
10 first one is primary components and those are the most
11 B- those are the highest susceptibility category of
12 components, and those are the components that will be
13 inspected, so those are considered the lead components
14 for degradation mechanisms. Typically, they'll be
15 inspected every 10 years, but there are some exceptions
16 to that.
17 Some examples of primary components for
18 Westinghouse Reactor Vessel Internals include the
19 baffle-to-former bolts, and those were a primary
20 component due to irradiation-assisted stress corrosion
21 cracking, irradiation embrittlement, void swelling,
22 and also stress relaxation.
23 Another example is the core barrel girth
24 welds which were a primary component for stress
25 corrosion cracking, irradiation-assisted stress

1 corrosion cracking, and irradiation embrittlement.
2 The next inspection category is expansion.
3 Those are components with high to moderate
4 susceptibility with some tolerance for degradation, so
5 those are only inspected if degradation is found in
6 lead components. So, each expansion component is linked
7 to a lead or primary component that would have similar
8 materials and expected degradation mechanisms.
9 Some examples of expansion components
10 include the core barrel axial welds, which are an
11 expansion component. They are linked to the core barrel
12 girth welds as the primary component. And, also, the
13 barrel-to-former bolts, which are an expansion
14 component for the baffle-to-former bolts.
15 The next category is no additional
16 measures, and those components were low susceptibility
17 components, or there was basically no impact of failure
18 on the function. And those are not subject to any
19 augmented inspections.
20 So, essentially, MRP-227-A doesn't
21 recommend any augment inspections for those components
22 due to aging, but those components may be inspected
23 under existing programs, such as ASME Code Section XI.
24 So, basically, anything that's considered a core
25 support structure is subject to a visual VT3

1 examination under Section XI, so that would be done
2 regardless of whether B- of how MRP-227 categorizes it.
3 And the last category is the existing
4 programs components.
5 MEMBER STETKAR: Do you have examples of no
6 additional measures B-
7 MR. POEHLER: Yes, I do.
8 MEMBER STETKAR: B- which might not be
9 included under Section XI?
10 MR. POEHLER: Oh, that were not included
11 under Section XI?
12 MEMBER STETKAR: Yes. I mean, in principle
13 there is that logical B-
14 MR. POEHLER: Yes. I mean, I don't have any
15 right off the top of my head, but there are certainly
16 some internals components that don't have a core
17 support function that would not be categorized as core
18 supports. That tends to be somewhat specific to the
19 licensees, because each licensee developed its ISI
20 program, and they determine which components, of
21 course, had a core support function, so it can vary
22 somewhat from plant to plant. But, yes, I don't have
23 a ready example of one that's not a core support.
24 MEMBER STETKAR: Okay.
25 MR. POEHLER: But if you want, I could B-

1 MEMBER STETKAR: I was just curious.

2 MEMBER RICCARDELLA: Thermal barrier,

3 maybe?

4 MR. POEHLER: That could be.

5 So, the last category is existing programs

6 components. So, those were components that did B- that

7 were determined to need augmented inspection for aging

8 effects, but it was determined that existing programs

9 that are in place now; principally, the ASME Section

10 XI In-Service Inspection Program would be adequate to

11 detect aging in those components. And a couple of

12 examples of existing programs components are the lower

13 core plate, and also the clevis insert bolts, and the

14 upper core plate alignment pins. Next slide, please.

15 Okay. So, now I'm going to talk about the

16 Staff's review of the Indian Point 2 and 3 RVI program,

17 and what our review concentrated on.

18 So, the Staff's review concentrated mainly

19 on two things. First, the Aging Management Program

20 elements, the 10 elements from the GALL, or actually

21 from B- in this case from the LR-ISG-2011-04. Secondly,

22 the applicant licensee action items. And there were

23 eight applicant licensee action items included in the

24 Staff's Final Safety Evaluation of MRP-227, Revision

25 0.

1 And to reference MRP-227, an applicant or
2 licensee has to resolve all those applicant licensee
3 action items that are applicable to its design. They
4 don't all apply to each vendor. So, these actions items
5 were included by the Staff in the Safety Evaluation for
6 MRP-227 to address issues for which the Staff found
7 MRP-227 did not provide sufficient guidance, or the
8 Staff didn't agree that the MRP-227 recommended
9 inspections were sufficient to manage aging. And, also,
10 for issues where plant-specific inputs were needed.
11 So, with respect to the Staff's review of
12 the Aging Management Program elements, the Staff
13 concluded the Aging Management Program elements met the
14 recommendations of License Renewal Interim Staff
15 Guide-2011-04, and are, therefore, acceptable.
16 And the Staff determined that the
17 applicant licensee action items number 1, 2, 3, 5, 7,
18 and 8 are applicable to a Westinghouse plant, such as
19 Indian Point 2 or 3. And action items 4 and 6 are not
20 applicable, because those are only applicable to B&W
21 design reactor internals. Next slide, please.
22 So, the next few slides I'm going to go
23 through to the action items that were applicable to
24 Indian Point, and how the B- both the applicant and the
25 NRC determined that these had been adequately

1 addressed. And, also, what the action items requires.
2 So, applicant licensee action item 1
3 stated that, "An applicant must assess its plant design
4 and operating history, and demonstrate that MRP-227-A
5 is applicable." So, the intent of this action item was
6 to insure that assumptions regarding operating
7 conditions for the generic components that were made
8 during the development of MRP-227 were valid for the
9 specific plant. And these were assumptions such as
10 neutron fluence levels, internal metal temperature
11 levels, and stress.
12 So, MRP-227-A contained three basic
13 applicability criteria, and those are that the plant
14 operates as a baseloaded plant, the plant switch to a
15 low-leakage core before 30 calendar years of operation,
16 and also that there are no plant-specific modifications
17 to the plant after a certain date, which is 2007. That
18 was the cutoff date.
19 However, the B- so, initially, many
20 applicants and licensees, such as Indian Point 2 and
21 3, in their responses to Action Item 1 just simply
22 referenced these three basic applicability criteria
23 and said we meet these three criteria, so we're good.
24 But the Staff was concerned that these three basic
25 criteria were not adequate to make a determination that

1 their MRP-227 was applicable. But there was also
2 insufficient Staff Guidance at the time for licensees
3 to make sure they met our expectations for resolution.
4 So, as a result of this, the NRC and EPRI
5 MRP held several meetings to discuss expectations for
6 resolution of this action item, which resulted
7 B- eventually resulted in the issuing by MRP of Letter
8 2013-025, and that contained additional guidance
9 corresponding to this action item.
10 And some of the criteria in the MRP letter
11 were related to core design, which in turn is related
12 to fluence, the fluence and temperature assumptions for
13 the reactor internals components. And these criteria
14 included a criterion for maximum core power density
15 which is related to fluence and heat generation
16 assumptions for components located radially outward
17 and above and below the core. And there are also some
18 geometric parameters which relate to the neutron
19 fluence for components located axially above the core.
20 Other criteria were related to insuring
21 that components were not subject to excessive cold work
22 during fabrication or modifications. And this was
23 related to the stress corrosion cracking
24 susceptibility of generic components because there was
25 an assumption of cold work less than or equal to 20

1 percent in stainless steel components.

2 DR. SHACK: What, specifically, do you have

3 to look at in the core design? I mean, you're not really

4 expecting them to do the fluence calculation all over

5 again.

6 MR. POEHLER: No, they did not B- we do not

7 expect them to do a plant-specific fluence calculation.

8 So, what was done by EPRI was to come up with a criteria

9 for core power density for each design, which that was

10 related back to some sensitivity studies, proprietary

11 sensitivity studies that were done by Westinghouse.

12 DR. SHACK: Westinghouse.

13 MR. POEHLER: So, it's a fairly rough

14 measure that the core design is conforming to sort of

15 the general norms.

16 DR. SHACK: Not saying anything about the

17 sensitivity studies B-

18 MR. POEHLER: Right.

19 DR. SHACK: B- there were some results

20 there that indicated that B- the results were sensitive

21 to certain fuel locations, let's say. It wasn't clear

22 to me how that you would insure that that variation

23 wasn't encompassed by the plant if you just stuck to

24 these sort of grosser measures.

25 MR. POEHLER: Yes. Again, I mean, it wasn't

1 intended to directly correlate to fluence because, yes,
2 it could B- there could be, you know, variations as far
3 as how you load your fuel. Also, all the plants switch
4 to a low-leakage core design, so at least you know that
5 B-
6 DR. SHACK: I mean, the thing that gives me
7 comfort is you apply this to enough plants, and you at
8 least get the notion of whether there is a problem. You
9 know, it's more solved by your expansion of the solution
10 than it is that you're really accurately characterizing
11 these things in the right way.
12 MR. POEHLER: You're not trying to accurate
13 C-- you know, correlate directly to fluence. Just to
14 make sure that you're in the general ballpark. Yes, I
15 mean, they wouldn't even say that it would prove you
16 were bounded by the generic assumptions. It would just
17 prove that they were B- or show that they were
18 adequately representative of the individual plant. So,
19 you know, it would be more accurate to do a
20 plant-specific fluence map, obviously, but that wasn't
21 B- Staff didn't feel that was justified.
22 MR. HISER: I think the other part is the
23 fact that there's leading components, and then
24 expansion components, so that's B- you know the leading
25 components will always be inspected. One of the things

1 that we were looking for was were there additional
2 components that should be inspected.
3 MR. POEHLER: Yes, and the industry argued
4 that, you know, even if the fluence was some amount
5 higher than the assumption, the general hierarchy of
6 the most susceptible components would not change. And
7 given that it's B- a program that inspects the most
8 susceptible components as the lead components, that the
9 lead components would not change.
10 DR. SHACK: Or you've got enough components
11 included in the lead category to tell you that you've
12 had a problem, and that that would suddenly send you
13 into the expansion thing which would, presumably, cover
14 you.
15 MR. POEHLER: So, I think the Staff sees
16 these criteria as just demonstrating you're reasonably
17 represented by the generic assumptions, not
18 necessarily that you're bounded by them.
19 MR. HISER: Did you mention the upper core
20 plate?
21 MR. POEHLER: Yes. Allen was B- there were
22 some questions about the upper core plate, because it
23 was found when they were doing some of these sensitivity
24 studies that the upper core plate could exceed fluence
25 assumptions that were previously made for certain

1 plants. So, that was why there were certain criteria
2 put in this letter for some geometric parameters for,
3 basically, distances from the fuel, top of the fuel to
4 the upper core plate. So, are there any more questions
5 on that? Okay, next slide.
6 So, the applicant's evaluation showed that
7 both Indian Point 2 and Indian Point 3 met the basic
8 and the additional criteria from the MRP letter.
9 Therefore, based on this information, the Staff
10 concluded that MRP-227-A is applicable to Indian Point
11 2 and Indian Point 3, and that the applicant adequately
12 addressed Action Item 1. Next slide.
13 Okay. So, applicant B- or Action Item 2
14 recommended that, "Applicants insure that all reactor
15 vessel internals components within the scope of license
16 renewal are covered by generic components in MRP-191."
17 If not, they were to modify plant-specific C-- their
18 plant-specific program to address the components not
19 covered. And I need to point out that MRP-191 is a
20 supporting report to MRP-227-A, and it documents the
21 screening and FMECA process in detail. And that's the
22 report that tabulates some of these, you know, things
23 like materials, and assumed operating conditions for
24 these components.
25 The applicant's evaluation for this

1 determined that all their components for Indian Point
2 2 and 3 have an equivalent generic component, or they
3 have an equivalent generic component, but there's a
4 material difference. And they went through B- for those
5 components that did have material differences, they
6 followed the same process as far as screening and FMECA
7 that was done to develop the recommendations for the
8 generic components. And they went through that for each
9 component with a different material, and they
10 determined that there were no differences in Aging
11 Management for those components resulting from those
12 material differences.
13 So, the Staff reviewed the applicant's
14 process and results for this, and we determined that
15 the applicant adequately evaluated the differences in
16 material, and so the applicant adequately addressed
17 Action Item 2. Next slide.
18 So, Action Item 3 recommends "the
19 justification of the adequacy of plant-specific
20 programs, or that the applicant should modify the
21 program to manage aging during the period of extended
22 operation." And the applicant's evaluation B- well,
23 the applicant determined that the split pins are the
24 only component with a plant-specific program for Indian
25 Point 2 and Indian Point 3. Can you go to the next slide,

1 please?

2 So, this slide shows B- yes, this shows a

3 figure B- this shows where the split pins are in the

4 internals, so here's the upper internals here, you have

5 the control rod guide tubes, and here's the detail of

6 the B- this is the lower part of the control rod guide

7 tube assembly. And the split pins are located down here.

8 They interface between this lower flange of the control

9 rod guide tube and the upper core plate. And, basically,

10 they're B- when everything is assembled, they're

11 pretty much inaccessible for visual examination, so the

12 strategy for managing aging of these split pins has been

13 to replace them. So, the operating experience is that

14 during the 1980s, there were a number of Westinghouse

15 PWRs that experienced failures at Alloy X750 split pins

16 due to stress corrosion cracking.

17 Indian Point 2 replaced the original Alloy

18 X750 split pins with a different Alloy X750, or

19 different B- X750 with an upgraded heat treatment that

20 was optimized for stress corrosion cracking

21 resistance. And so, you know, the current strategy is

22 that B- there were still some failures in these even

23 in the optimized X750 heat treatment, so the industry

24 went to using cold-worked Type 316 stainless split

25 pins. Let's go back to the previous slide.

1 DR. SHACK: And there's enough experience
2 with that to know that it really works?
3 MR. POEHLER: Yes, there's a good deal of
4 B- there's probably at least 10 to 15 years experience
5 with the 316 cold-worked. So, Indian Point 3 replaced
6 with 316 cold-worked in 2009.
7 For Indian Point 2, they made Commitment
8 Number 50 to replace the split pins during the 2016
9 refueling outage. And the applicant also justified that
10 replacement date with a remaining life analysis based
11 on a statistical analysis of existing failure data for
12 the X750, the type of material they have.
13 So based on that, the Staff found that the
14 applicant had adequately addressed Action Item 3 based
15 on the replacement of split pins with stress corrosion
16 cracking resistant material for Indian Point 3, or a
17 commitment to do so for Indian Point 2. Next slide.
18 Okay. So, Action Item 5 recommends that
19 licensees identify plant-specific acceptance criteria
20 to be used when performing physical measurements. The
21 applicant's evaluation determined that Action Item 5
22 was applicable only to the hold-down springs. Can we
23 go to the next slide, please.
24 So, this is a figure showing where the
25 hold-down springs are, and what they look like. So, this

is B- here, again, is the upper internals. This is the flange area. This is the B- basically, this is the top support plate of the upper internals here, so that's this plate. And, basically, this is the spring here. The spring kind of has a rectangular cross-section, and it goes in between the top support plate and the core B- this is the core barrel, the top of the core barrel, and the core barrel upper flange kind of rests on a little lip on the reactor pressure vessel. And then the vessel head clamps down on the top support plate, compresses the spring, and that provides a compressive force down on the core barrel. So, it's basically to prevent flow-induced motion and vibration wear of the internals. So, the spring is designed for operating conditions loads, and it provides B- basically, provides a net downward force to prevent the hydraulic forces of coolant flow from moving or lifting the lower internals.

Springs made from Type 304 stainless, which is what Indian Point 2 and 3 has, are susceptible to loss of preload over time due to both thermal and stress effects. And this loss of preload can eventually lead to wear of the reactor internals mating surfaces, which in turn could lead to difficulty reassembling the internals or shifting of the upper internals, or

1 operation outside of design basis for vibrational
2 frequencies in the most severe cases. Let's go back
3 to the previous slide.
4 So, to respond to this action item, the
5 applicant explained how the physical measurements are
6 evaluated. Basically, they do B- they measure spring
7 height when it's unloaded, and their B- by linear
8 interpolation between the initial spring height, that
9 would be the pre-service spring height and the 60-year
10 B- the minimum required height at 60 years, they would
11 determine what the acceptable height is at the time of
12 the first measurement.
13 MEMBER STETKAR: Looking at some of the
14 inspection reports, I mean, they're measuring that
15 spring height to within plus or minus
16 two-ten-thousandths of an inch. How do they do that in
17 the field?
18 MR. POEHLER: I'm not sure exactly how they
19 do it.
20 MEMBER STETKAR: Okay.
21 MR. POEHLER: So, I can't comment on that.
22 But, yes, it's a pretty precise measurement.
23 MEMBER STETKAR: If somebody has some
24 information, that would be great.
25 MR. DOLANSKY: This is Bob Dolansky with

1 the Reactor Vessel Internals, Indian Point. I don't
2 know specifically how they measure it, but I know
3 Westinghouse does it. They're going to do it in Indian
4 Point, and they have high confidence that the method
5 that they use does it. I haven't actually seen it done.
6 DR. SHACK: I don't measure anything to
7 two-ten-thousandths of an inch.
8 MR. DOLANSKY: I mean, we measure other
9 things very close. I mean, they have, you know, ways
10 to measure B-
11 (Simultaneous speaking)
12 MR. POEHLER: Yes. I guess what I should
13 say, this is a one-time measurement according to
14 MRP-227-A. But if the spring height is unacceptable at
15 that one-time measurement, they will do a follow-up
16 measurement to determine what the actual trend is, or
17 replace the spring.
18 MEMBER RICCARDELLA: So, I would assume
19 they take a bunch of measurements around the
20 circumference, not just one point.
21 MR. DOLANSKY: This is Bob Dolansky, again.
22 Yes, we're going to take eight measurements at eight
23 points around the spring, and we'll probably take three
24 measurements at each point just to get an average.
25 MR. POEHLER: So, the Staff finding on this

was because the applicant had clarified how the acceptable spring height is determined, and also the Staff also performed an audit of the detailed calculation of what the required spring height it. That was a proprietary calculation. And based on that, the Staff determined the applicant has adequately addressed Action Item 5. Next slide, please.

Okay. So, Action Item 7 is for plant-specific evaluation of cast austenitic stainless steel. And Action Item 7 requires that applicants and licensees demonstrate functionality of cast components through the end of life considering the loss of fracture toughness due to thermal embrittlement and irradiation embrittlement.

And the Staff included this action item because we were concerned that the MRP-227-A report did not adequately address the combined effects of thermal embrittlement, and irradiation embrittlement, or the synergistic effect, as some people like to say. There's little or no data available on the fracture toughness of cast austenitic stainless steel that has been simultaneously exposed to both thermal aging caused by normal reactor operating temperatures over many years, and irradiation embrittlement due to neutron fluence exposure.

1 So, for the applicant's evaluation they
2 determined that the only component that this action
3 item is applicable to is the lower support column caps
4 at Indian Point. Can we go to the next slide, please.
5 Next slide.
6 So, this is a figure showing where these
7 column caps are. So, this is showing the lower support
8 structure of the lower internals. And here's your lower
9 core plate on which the fuel sits. And you have the core
10 support, a thicker plate down here. This is the core
11 support plate or forging, and transmitting the load
12 between those are the core support columns. And this
13 is detail of one of the core support columns. And this
14 top part here is B- that's what Indian Point calls the
15 column caps. And only this top part is cast austenitic
16 stainless steel. The remainder of it at Indian Point
17 is wrought austenitic stainless steel. Okay, so let's
18 go back to Slide 25. Thanks.
19 So, initially, the applicant made
20 Commitment Number 47 to provide a detailed analysis
21 of the functionality of these components prior to the
22 start of the period of extended operation. However, the
23 Staff wanted more detail on the process that would be
24 used by this evaluation, so there were several rounds
25 of requests for additional information. And,

1 additionally, at the time, the Staff's position on what
2 would constitute an acceptable resolution to Action
3 Item 7 was still evolving. So, in some of the responses
4 to these RAIs, the applicant was able to show that they
5 could screen out thermal embrittlement from the column
6 caps.
7 DR. SHACK: On what basis?
8 MR. POEHLER: That was based on the
9 chemical composition B
10 DR. SHACK: Low ferrite.
11 MR. POEHLER: B and the ferrite content.
12 They had low molybdenum material, and also they were
13 able to calculate the ferrite content using the hull's
14 equivalent factors, and they were all less than 15
15 percent ferrite. So, therefore, they were able to
16 screen out for thermal embrittlement. So, therefore,
17 they could treat the column caps as equivalent to
18 wrought stainless steel with respect to irradiation
19 embrittlement, so they would still be susceptible to
20 irradiation embrittlement, but not thermal.
21 Also, in addition to screening out for
22 thermal embrittlement, the applicant provided
23 information, a non-destructive evaluation that was
24 done during fabrication that demonstrated that
25 preexisting flaws in the column caps are extremely

1 unlikely. Also, cast austenitic stainless steel is very
2 resistant to mechanisms that would cause
3 service-induced cracking, such as stress corrosion
4 cracking, has much better resistance than non-cast
5 stainless steel. The licensee also demonstrated that
6 fatigue cracking is not a concern for these columns.
7 So, if you don't have any cracks, embrittlement, loss
8 of fracture toughness is not an issue when you don't
9 have cracks to start a fracture.
10 And, finally, to provide
11 defense-in-depth, the applicant also proposed a change
12 to the linked primary component for the lower support
13 columns to a component that is a better predictor for
14 radiation-induced staging mechanisms that included
15 irradiation embrittlement, and irradiation-assisted
16 stress corrosion cracking. And that component is the
17 core barrel lower girth weld. And this weld is inspected
18 as a primary component in MRP-227 using enhanced visual
19 examination, EVT 1. And it receives a neutron fluence
20 comparable to the top part of the column caps, which
21 is the most highly irradiated part of the column caps.
22 The fluence drops off fairly rapidly as you go below
23 the core, so it's only really the top couple of inches
24 of the column caps that's really susceptible to
25 irradiation embrittlement.

1 So, if cracking were found in the core
2 barrel lower girth welds in excess of 2-inches in
3 length, that would trigger an expansion inspection of
4 the column caps within the next two refueling outages.
5 MEMBER RICCARDELLA: I'm sorry, I missed
6 that. If what?
7 MR. POEHLER: So, if you're inspecting the
8 core barrel girth welds and you find any cracking,
9 cracking longer than 2 inches, that's the MRP-227
10 expansion criteria for those welds, so that would
11 trigger an expansion inspection to the expansion
12 component for those welds. Which is also B- there's
13 another weld you would expand, another core barrel
14 weld, the axial welds, but Indian Point has a
15 plant-specific expansion. They added B- they said
16 we're going to expand to the support columns, as well.
17 MEMBER RICCARDELLA: So, going back to that
18 figure on Slide 27.
19 MR. POEHLER: Right.
20 MEMBER RICCARDELLA: What's the
21 approximate dimension across the top of those caps
22 where those little fins are?
23 MR. POEHLER: I'm sorry, restate the
24 question.
25 MEMBER RICCARDELLA: What's the

1 approximate dimension across those fins at the very
2 top? Is that 2 inches, 5 inches?
3 MR. POEHLER: I believe it's B- the
4 diameter of the columns I think is about 2-1/2 inches
5 B-
6 MEMBER RICCARDELLA: Okay.
7 MR. POEHLER: B- if I remember right. So,
8 I think the ears on there are probably a little bigger,
9 but I don't have the exact dimensions. Do you know? All
10 right.
11 MEMBER RICCARDELLA: I guess, I'm not sure
12 the relevance of a 2-inch crack in a core barrel to a
13 crack in one of those little fins.
14 MR. POEHLER: Well, I think the 2 inches is
15 the B- you know, that's what's in the expansion
16 criteria in MRP-227.
17 DR. SHACK: That's probably the resolution
18 criteria, too. I mean, you know, you're only doing this
19 by a visual inspection so you're not going to see a ultra
20 type crack.
21 MEMBER RICCARDELLA: Okay.
22 DR. SHACK: That's what concerns me about
23 this, is that, you know, a 2-inch crack in a core barrel
24 is a no never mind. When I come down to a component like
25 this, you know, the crack might well be tighter, you

1 know. Can I really do this by a visual inspection to
2 know whether there is or is not a crack in this component
3 that, you know, might have me concerned.
4 MEMBER RICCARDELLA: You'd know if one of
5 those fins was missing.
6 DR. SHACK: Well, yes, VT3 would be good
7 enough for that.
8 MR. POEHLER: Yes. I mean, I guess there is
9 a lot of redundancy in the support structure, as well.
10 DR. SHACK: Yes, I think that's B
11 MR. POEHLER: It's a little bit different,
12 but B- and the welds, when you inspect those girth
13 welds, you're inspecting hundreds of inches of weld,
14 so a 2-inch crack is relatively small compared to the
15 entire B-
16 MR. HISER: And this is wrought B- or this
17 is cast stainless, it's not B- there's not a weld.
18 MR. POEHLER: The columns. Yes, there's B-
19 MR. HISER: Yes, so there's no weld here so
20 you have B-
21 MEMBER RICCARDELLA: They're arguing that
22 the weld is like a casting, I guess.
23 MR. POEHLER: Yes, it has B- you know, it
24 also has B- well, it has irradiation embrittlement as
25 a mechanism, and irradiation-assisted stress corrosion

1 cracking, also.

2 MR. DOLANSKY: Excuse me. This is Bob

3 Dolansky. Just to clarify that the inspection that we

4 would do on both the lower core barrel cylinder girth

5 weld and the lower support column caps is an EVT 1. That

6 is actually a very detailed VT exam that would see very

7 small cracks.

8 DR. SHACK: Yes, but when I look at 228, the

9 standard, it still only gives me sort of like a

10 millimeter resolution for those things, or less. Now

11 B- and I'm allowed to go up to like a millimeter, which

12 is, you know, a yawning canyon for a crack.

13 MR. DOLANSKY: Right. But EVT 1 is the best

14 C-I just wanted to make sure everybody understands. An

15 EVT 1 is a very good exam. It's not a VT 3, and it's

16 not just B-

17 DR. SHACK: No, it's not a VT B- VT 3 is a

18 tenth of an inch, you know.

19 MR. DOLANSKY: Right.

20 DR. SHACK: It's four millimeters.

21 MR. DOLANSKY: And it's not just a VT 1,

22 it's an Enhanced VT 1 with more stringent criteria for

23 speed and all that stuff.

24 MEMBER RICCARDELLA: You know, we're

25 looking for cracks. I mean, we're looking for cracks

1 to try to see whether there's been embrittlement.
2 MR. POEHLER: No, we're looking B-
3 MEMBER RICCARDELLA: That's not really a
4 measure of embrittlement.
5 MR. POEHLER: We're looking for cracks to
6 make sure if there is embrittlement, it's not going to
7 be an issue.
8 MEMBER RICCARDELLA: You said redundancy.
9 How many of these columns are there?
10 MR. POEHLER: There are 68.
11 MEMBER RICCARDELLA: Has someone done an
12 analysis to show what happens if a couple of them are
13 missing?
14 MR. POEHLER: As a matter of fact, such an
15 analysis has been done by the PWR Owners Group. It's
16 proprietary, probably can't talk about it.
17 MEMBER RICCARDELLA: Okay.
18 MR. POEHLER: But it's B- yes, so B-
19 MEMBER RICCARDELLA: So there is some
20 tolerance.
21 MR. POEHLER: There is some tolerance, yes.
22 Anyway, so back to Slide 25. Okay. Next slide, please.
23 So, the Staff finding was that the
24 applicant had provided sufficient information to
25 provide reasonable assurance of functionality of the

1 column caps through the period of extended operation
2 for the reasons that they screened out thermal
3 embrittlement; therefore, only irradiation
4 embrittlement is applicable. They showed that both
5 pre-service and in-service flaws are very unlikely, and
6 they provided a link to a primary component that is a
7 good predictor for IASCC and IE. So, therefore, based
8 on that, the Staff concluded the applicant had
9 adequately addressed Action Item 7. And based on that,
10 the Staff agreed with the applicant's proposal to
11 delete Commitment 47. Next slide, please.
12 So, applicant licensee Action Item 8
13 recommends submission of a B- this is, basically,
14 submittal of information for Staff review and approval.
15 So, it recommends the submission of a Reactor Vessel
16 Internals Aging Management Program, and an inspection
17 plan for current licensed renewal applicants. Also,
18 additionally, for current licensed renewal applicants
19 they should submit a Final Safety Analysis Report
20 Supplement, and a Technical Specification Markup. And,
21 also, any time-limited aging analyses related to the
22 reactor internals. If there are time-limited aging
23 analyses related to fatigue, this action item
24 recommends that these account for reactor order
25 environmental effects.

1 So, the applicant provided the Aging
2 Management Program and inspection plan. The applicant
3 also committed to update its Reactor Vessel Internals
4 Fatigue Time-Limited Aging Analysis to account for
5 environmental effects as recommended by Action Item 8.
6 So, there were B- the applicant did have some fatigue
7 time-limited aging analysis in their license renewal
8 application, and those originally did not account for
9 environmental effects, but they committed to update
10 those to include the environmental effects.
11 So, therefore, the Staff found that the
12 applicant had adequately addressed Action Item 8
13 because it provided the recommended information, and
14 it also made a commitment to revise its fatigue
15 time-limited aging analysis. Next slide, please.
16 So, the conclusion for the Reactor Vessel
17 Internals Program is, first, for the Reactor Vessel
18 Internals Aging Management Program, the applicant has
19 demonstrated that the effects of aging will be
20 adequately managed per 10 CFR 54.21a3. And, also, that
21 the FSAR Supplement is adequate in accordance with 10
22 CFR 54.21d. With respect to the Reactor Vessel
23 Internals Inspection Plan, the Staff found that it
24 implements the elements of the Reactor Vessel Internals
25 Aging Management Program in an acceptable manner, and

1 that was because the program is consistent with the
2 generic Reactor Vessel Internals Inspection and
3 Evaluation Guidelines of MRP-227-A. And, secondly,
4 because the applicant adequately addressed all of the
5 applicable action items.
6 Finally, the Reactor Vessel Internals
7 Inspection Plan addresses the conditions of the Final
8 Safety Evaluation for MRP-227, Revision 0. And I just
9 want to point out that those conditions in the
10 MRP-227-A, all of the conditions of the Final Safety
11 Evaluation B- the Staff's Final Safety Evaluation were
12 incorporated into the -A version, so by referencing the
13 -A version of the report, the applicant addressed all
14 the conditions.
15 So, that concludes my part of the
16 presentation. If there are any more questions, I'll try
17 to answer them now.
18 MEMBER STETKAR: Kim, before you wrap up,
19 I never like to let Allen completely off the hook in
20 these meetings, so you know what's coming.
21 I want to go back to the question I had this
22 morning about the scope of the sample sizes for the
23 one-time inspection program. I think you're probably
24 the one to answer this.
25 Just to refresh everybody's memory, what

1 I asked about this morning, the applicant said that they
2 found what they called observations. They found some
3 corrosion on that service air valve, the piping
4 connection. And I asked well, if they do that, does the
5 one-time inspection program require them to increase
6 the sample size to gain additional confidence that that
7 was an isolated case, or do they need to perform,
8 essentially, more inspections, because it is a one-time
9 inspection. And it's used to justify the fact that you
10 don't need a continuing periodic inspection program for
11 those particular issues throughout the entire
12 remaining period of extended operation. And the
13 applicant said well, you know, their Corrective Action
14 Program would handle the examinations for, perhaps, an
15 expanded extent of condition for similar components,
16 but that's not what I'm asking about, because it's being
17 used as justification in the license renewal process
18 to justify why we don't need a continuing inspection
19 program for either particular environment or
20 particular materials. So, do you have any information
21 that would help me?
22 MR. HISER: Well, the purpose of the
23 one-time program is to verify effectiveness of programs
24 like water chemistry, fuel oil chemistry, that they are
25 adequately controlling degradation of the components.

1 MEMBER STETKAR: Okay, that's B-

2 MR. HISER: The intent B-

3 MEMBER STETKAR: B- part of it. But how do
4 you handle B- I B- this is part of my own education,
5 because I don't know exactly how this is developed. If
6 I look at the inspection report, they note that of the
7 400 or so inspections that were in the scope of the
8 one-time inspection, about 300 of them were focused on
9 that, you know, looking at the effectiveness of water
10 chemistry control, looking at lubrication oil, looking
11 at existing programs. And about 120 or so were for
12 other, I've forgotten the terminology. I don't have it
13 in front of here, but other items that were identified
14 in the license renewal application. To me, that means
15 items that were not being controlled under those
16 existing programs, but for which you wanted to take a
17 snapshot in time to assure yourself that there wasn't
18 any unexpected aging mechanism such that you don't need
19 to implement a program for those going forward. So, I'm
20 more concerned about, you know, that 120 because that's
21 the one that's, in my impression anyway, that I'm taking
22 a snapshot at this point in time 30 to 40 years into
23 the life of the plant, and gaining confidence that,
24 indeed, I'm not discovering any unexpected aging for
25 which I need to implement a program going forward. So,

1 I'm not particularly concerned about the one you
2 brought up. I'm concerned about the second part.
3 MR. HISER: Well, the Acceptance Criteria
4 for the one-time programs are find no degradation, or
5 you find degradation that is slow, would be slow
6 growing, if you will, so that it would not affect
7 component functionality during the PEO. So, for
8 example, minor corrosion, things like that, once it's
9 analyzed as to the effect on functionality, I think that
10 would be the kind of finding or observation that we
11 would probably say was not B- did not violate the
12 Acceptance Criteria with the one-time program.
13 MEMBER STETKAR: Okay. But, again, I'm here
14 to play the devil's advocate. You find corrosion B- you
15 know, this one example, and you analyze it and you say
16 okay, it's slow. We've identified we think the cause.
17 Why don't you go look for it in other places, though,
18 because you only sampled, you know, a finite number of
19 combinations of environment and materials? Maybe
20 there's another place that you didn't go look for it,
21 that had a more rapid onset, or worse corrosion.
22 MR. HISER: Yes. I think maybe Garry will
23 speak to the B-
24 MR. YOUNG: Yes. Let me clarify a little
25 bit. Garry Young with Entergy. This morning when we

1 were talking about this particular example, you're
2 correct, this was not part of the water chemistry, or
3 the fuel oil. So, the area that was being looked at was
4 being looked at because of operating experience where
5 we thought there might be an issue, which as you heard,
6 there was some corrosion found. That kicks it out of
7 the one-time inspection program.
8 The one-time inspection program was set up
9 to confirm that there is no aging effect requiring
10 management. In this case, we found an aging effect. We
11 kicked it into the Corrective Action Program, which is
12 an element of the one-time inspection. That's one of
13 the activities. But once it's in the Corrective Action
14 Program, then we decide what to do in the future and
15 it becomes a plant-specific program at that point, and
16 it's no longer one of the traditional Aging Management
17 Programs. So, in this case, and as you heard earlier,
18 we're still B- we're not finished with all of the
19 evaluations, but in this case we have determined that
20 we will go back and look at it again. It will not be
21 done under the one-time inspection program. It's done
22 under a plant-specific program, which is a result of
23 our Corrective Action. Does that help?
24 MEMBER STETKAR: That helps if, indeed
25 B- the point I was missing was that the Corrective

1 Action Program is linked to the development of a
2 plant-specific program.
3 MR. YOUNG: Right. That's what B-
4 MEMBER STETKAR: Aging Management Program.
5 MR. YOUNG: That is the mechanism where we
6 create a plant-specific program, is if we find
7 something unexpected. Then we use the Corrective Action
8 Program to help define the scope and the frequency, and
9 basically the whole intent of the program.
10 MR. HISER: And that would be our
11 expectation for any findings from one-time programs
12 that exceed Acceptance Criteria.
13 MR. YOUNG: Yes.
14 MR. HISER: If it indicates that there is
15 a problem B-
16 MEMBER STETKAR: No. Exactly, I mean,
17 that's what I was trying to get to, but I'm glad B-
18 MR. HISER: But not just in this case, in
19 general, that is the purpose of the one-time programs.
20 It is, like you said, it's an B-
21 MEMBER STETKAR: But that is a
22 plant-specific program that isn't necessarily just
23 part of the normal plant's Corrective Action Program.
24 That's a plant-specific Aging Management Program, or
25 is it B-

1 MR. HISER: Well, it's B-

2 MEMBER STETKAR: I understand there's

3 B- they're integrated, so B-

4 MR. YOUNG: Yes, the Corrective B- yes,

5 everything goes B- anything unexpected goes into the

6 Corrective Action Program.

7 MEMBER STETKAR: Right.

8 MR. YOUNG: And then the Corrective Action

9 Program, we identify all of the actions necessary to

10 deal with, such as extent of condition, do we need to

11 go back and look again? Is there an operability issue,

12 that sort of thing? So, the Corrective Action Program

13 is our mechanism for dealing with anything unexpected;

14 in this case, unexpected finding from a one-time

15 inspection program. Then it becomes part B- it could

16 become part of another program, such as our Preventive

17 Maintenance Program, or whatever is appropriate, but

18 that's all evaluated through the Corrective Action

19 process.

20 MEMBER STETKAR: Okay. I think what was

21 bothering me, and it still B- I mean, it's B- in many

22 cases the devil is in the detail. What was bothering

23 me, every time I probed this morning, people focused

24 back on there were four of these things, and only one

25 is a problem. And we're looking at this four, or we're

1 looking at this one.

2 MEMBER SCHULTZ: And why isn't there a

3 feedback loop to that one-time program?

4 MEMBER STETKAR: And why isn't there a

5 feedback to go back in the one-time program and look

6 at an expanded sample under that one-time program of

7 similar combinations of environment and material?

8 MR. YOUNG: Well, again, we didn't go into

9 that much detail this morning, but this particular

10 situation was the service air system, which the only

11 part of it that's in scope for an issue is the

12 containment penetration. The rest of the system is not

13 credited for any safety function.

14 MEMBER STETKAR: But, Garry, I'm not

15 talking about the system. I'm clear that it's a service

16 air system. It's was the front of the system.

17 MR. YOUNG: Right, but the other B-

18 MEMBER STETKAR: That's going to be tough

19 on the transcript, but it's B- I don't care about the

20 particular system.

21 MR. YOUNG: Okay, understand.

22 MEMBER STETKAR: I care about the

23 combination of environment and materials.

24 MR. YOUNG: Right. And we do look at that

25 as part of our Corrective Action Program, if we have

1 that material-environment combination B-

2 MEMBER STETKAR: Okay.

3 MR. YOUNG: B- in other parts of the plant.

4 Now, I don't know the details. I know that was looked

5 at as part of this Condition Report. We could get back

6 on whether there were any other air systems that had

7 this particular combination, and then how that was

8 evaluated. But that would be part of the Corrective

9 Action process. I just don't know the details of that

10 element. We can get back to you on that, though.

11 MEMBER STETKAR: Doesn't even have to be

12 air, could be some sort of gas, could be nitrogen, could

13 be B- it's B-

14 MR. YOUNG: Well, yes, right.

15 MEMBER STETKAR: See, that's my whole

16 point, is B-

17 MEMBER SCHULTZ: It hasn't been in the

18 Corrective Action Program that long, but B-

19 MEMBER STETKAR: That's right. That's part

20 of it.

21 MEMBER SCHULTZ: So, it's headed down that

22 roadway. But, again, the open question still to me is,

23 should there not be some feedback loop directly to the

24 one-time program?

25 MR. COX: Let me B- this is Alan Cox. Let

me see if I can add a little bit more clarification here. This was a pretty limited scope as far as this environment. We're talking about a service air system. Most of the air systems that we have, there's an air system program that involves periodic samples.

MEMBER STETKAR: Sure.

MR. COX: These were air lines that are associated with a couple of containment penetrations normally isolated so you couldn't take credit for the programs that apply to the rest of the system. When you talk about the population that could be affected by this, it's just these four valves. Everything else that's service air is under the service compressed air monitoring program, or it's non-safety related, not even in the scope of license renewal.

MEMBER SCHULTZ: Well, that's kind of like B- John, I had it on my list to talk to the Staff about, because we're really talking programmatically about the one-time program.

MEMBER STETKAR: Right. That's why B-

MEMBER SCHULTZ: Thank you for your response.

MR. COX: This particular example, that was the total population when we looked at 100 percent of everything that was in the environment that was of

1 concern here.

2 MEMBER STETKAR: But programmatic

3 B- thanks, that helps. But, programmatically now B-

4 MEMBER SCHULTZ: What if it was something

5 else that was B-

6 MEMBER STETKAR: What I'm hearing is that

7 there's nothing in the one-time inspection program,

8 unless the Staff helped, that basically says you should

9 go expand the sample size, as there are in other

10 inspection programs. If you find a problem, you have

11 to increase the sample size until you have additional

12 confidence that it was an isolated condition.

13 MR. HISER: There are no specific

14 statements of doing specific expansions for this

15 program, because we believe the Corrective Action

16 Program is adequate to identify when expansions are

17 needed. There are other programs where we do have

18 specific B-

19 MEMBER STETKAR: No, that's right. Yes.

20 MR. HISER: But in this case, we thought

21 that the Corrective Action Program was adequate to

22 identify expansions that are needed, identify the need

23 for periodic inspections, and things like that. So, in

24 this case we were comfortable with the Corrective

25 Action Program.

1 MEMBER STETKAR: From a programmatic
2 sense, the reason I'm more interested is, this is to
3 my knowledge our first opportunity, at least at the
4 Subcommittee level, to hear some actual results. I
5 mean, we talked through all of the license renewals,
6 we've talked about programs, we've raised questions
7 about the one-time inspection program, the amount of
8 equipment that's being subject to one-time inspection.
9 And this is our first, you know, concrete example of
10 the application of that inspection, and that's why I'm
11 trying to better understand, as Steve said, the
12 programmatic elements of it, and what are those
13 implications.
14 MR. YOUNG: One thing that might help, too,
15 here is that the one-time program, just as Allen said,
16 is for B- to determine that we do not have aging effects
17 in areas that we originally ruled out and said we would
18 not have them. If we find them, we're automatically out
19 of that program. The program is a one-time inspection
20 program. If we find something, we're out of that
21 program. The only way we get out of that program is
22 through the Corrective Action process which is in
23 B- that's one of the 10 elements in the one-time
24 inspections. Now, it kicks us into other programs, and
25 we also talked about selective leaching. That was also

1 a one-time program. That kicks us out into a
2 plant-specific selective leaching program.
3 MEMBER STETKAR: Right. But there B- but in
4 that example it was very clear that Entergy said we
5 either enhance the existing selective leaching
6 program, or developed a plant-specific selective
7 leaching program. And I understand that under the
8 context of Aging Management Programs.
9 MR. YOUNG: Okay.
10 MEMBER STETKAR: In this case, you're not
11 saying that. You're saying that while your Corrective
12 Action Program will handle this particular
13 identification of corrosion B-
14 MR. YOUNG: Okay.
15 MEMBER STETKAR: B- and that's the link
16 that I'm trying to make.
17 MR. YOUNG: Okay. We look at it from the
18 viewpoint that the Corrective Action Program in both
19 cases was the same. And one of them led us to a
20 plant-specific selective leaching program for those
21 components, because there were several components
22 involved. In this case, we had just the four components
23 that were of interest and, therefore, it kicked us into
24 a Corrective Action, which includes the follow-up
25 inspection. We don't call that an Aging Management

1 Program at this point. We call it maybe Preventive
2 Maintenance or something, but if we continue to see
3 problems here we'll either do a design change and fix
4 it, or we'll implement a new Aging Management Program.
5 So, they both led through the Corrective Action
6 process, they actually both lead to the same result,
7 is we address the problem.
8 MEMBER STETKAR: Okay, thanks.
9 MR. YOUNG: Okay.
10 MEMBER STETKAR: I still have to think
11 about it a little bit, but I understand what you're
12 saying.
13 MR. BARTON: Just not comfortable.
14 MEMBER STETKAR: Huh?
15 MR. BARTON: You're just not comfortable.
16 MEMBER STETKAR: I don't know whether I'm
17 comfortable or not. I think I could be if I thought about
18 it a little more. I just had not ever thought about the
19 one-time inspection program in that way. In other
20 words, if you did discover something, I had always
21 thought that it would be more like the example of we
22 discovered something. Gee, we have to create a
23 plant-specific Aging Management Program, or that I'd
24 have to expand my sample size to understand that this
25 is, indeed, an isolated case that I can treat under the

1 Corrective Action Program.

2 MEMBER BALLINGER: In a sense, they did in

3 this case expand their program, because did I hear that

4 once you discovered the corrosion problem, this is one

5 out of four valves that's different. Then you said to

6 yourself what other configure B- similar configuration

7 do we have in the plant? Did I hear you say you B-

8 MEMBER STETKAR: The licensee did. The

9 Staff didn't B-

10 MEMBER BALLINGER: Yes, all right. Yes,

11 yes, right. The licensee did that. Right? Is that

12 correct?

13 UNIDENTIFIED: Yes.

14 MEMBER BALLINGER: So it is kind of like

15 expanding the program. Then they said okay, we've

16 looked, we don't see it. Now we're back to the

17 Corrective Action Program. If they had seen it in other

18 parts of the plant, then it would have been like John

19 is saying, a different B- an expansion. Right?

20 DR. SHACK: Well, it's still with

21 Corrective Action Program. The Corrective Action

22 Program prescribes the proper way to treat the problem.

23 If the proper way to treat the problem is to set up a

24 new program then, presumably, you set up the new

25 program, as in the selective leaching. If it says I look

at this one component because there aren't any others like it, and I maintain it, then that's the B-

MEMBER BALLINGER: That's the end of it.

DR. SHACK: B- answer. So, I mean, all they're saying is that the Corrective Action Program leads them to decide how to treat it, which could be a program, or it could be a B-

MR. BARTON: One-time fix or something, that's it.

DR. SHACK: Yes.

MEMBER BALLINGER: But in this case, was it selective leaching? I asked what the corrosion problem B- I keep B-

DR. SHACK: No, no.

MEMBER BALLINGER: It was not selective leaching. The corrosion problem was not selective leaching.

MR. YOUNG: No, it was some minor corrosion was identified.

MEMBER BALLINGER: Okay.

DR. SHACK: But they did set up a separate program for the leach B-

MEMBER BALLINGER: Yes.

MEMBER STETKAR: Okay. I think I got it.

MEMBER REMPE: Can I have a history lesson

on the other B- since we're off topic a little bit. You mentioned this is the first time that you've seen this with the license renewals, and a lot of this happened for a lot of us who are on ACRS. They hadn't done the one-time inspections even in the prior ones?

MEMBER STETKAR: We haven't seen them. There are a number of plants that are B- I don't know how many, a number of plants B-

(Simultaneous speaking)

MEMBER STETKAR: B- in their PEO, but we've not B- we, typically, don't get involved as the ACRS in those inspections. That's B- you know, just because of the nature of the timing of this beast B-

MEMBER REMPE: Right.

MEMBER STETKAR: B- we have the opportunity to see the Staff's inspection reports.

MEMBER REMPE: Right. I guess I didn't realize that they hadn't B-

MEMBER STETKAR: The Staff's inspection reports of the commitments B-

MEMBER SCHULTZ: The unique timing of the B-

MEMBER REMPE: Unique timing, but I would have thought the one-time inspections, I hadn't realized C-- again, it was before we started on ACRS,

1 that they had not even done the one-time inspections
2 B-
3 MEMBER STETKAR: They only have to do them
4 before they enter the period of extended operation.
5 MEMBER REMPE: And they B-
6 MEMBER STETKAR: And there are a number of
7 plants that have done them. We just don't typically see
8 them.
9 MEMBER REMPE: Okay.
10 MEMBER STETKAR: As ACRS, we don't see a lot
11 of, you know, the Regional inspections.
12 MR. HISER: And from our perspective, we
13 don't want them to do those one-time inspections too
14 early.
15 MEMBER STETKAR: Yes.
16 MR. HISER: We'd actually like as much
17 exposure time, so if something were to occur that it
18 would be more detectible.
19 MEMBER STETKAR: But, I mean, there are a
20 number of one-time inspections that have been
21 completed.
22 MEMBER REMPE: I'm sure.
23 MEMBER STETKAR: And the Staff has audited
24 those one-time inspections. We just don't typically see
25 those.

1 MR. HISER: That's correct.

2 MEMBER STETKAR: So, you know, it's one of
3 these things when you see it you say oh, gee, that's
4 interesting. I hadn't thought about it before. Okay,
5 thank you. Now, you can get to the last slide.

6 MS. GREEN: Okay. So, 10 CFR 54.29a
7 contains the standard for issuing a renewed license.
8 It states that, "The Commission may issue renewed
9 license if it finds the actions have been identified
10 and have been or will be taken, such that there is
11 reasonable assurance that the activities authorized by
12 the renewed license will continue to be conducted in
13 accordance with the current licensing basis."

14 So, in the Staff's SER that was published
15 back in 2009, our conclusion was that on the basis of
16 our review, or its review of the LRA, the Staff
17 determines that the requirements of 10 CFR 54.29a have
18 been met. And based on our review of the information
19 that Entergy has provided in the form of its annual
20 updates and for its Reactor Vessel Internals Inspection
21 Plan and Program, and in response to RAIs that we've
22 issued, we determined that the additional information
23 does not alter our conclusion in our documented SER back
24 in 2009, and that the requirements of 54.29a have been
25 met.

1 So, our review is still ongoing. Entergy
2 has amended its LRA again in the form of an annual
3 update. That came in to us in December of 2014, and also
4 they've sent in some responses to some RAIs that we've
5 asked on some License Renewal Interim Staff Guidance
6 documents; those being ISG-2012-02. And that talks
7 about approaches, acceptable approaches for management
8 of aging effects on internal surfaces of components and
9 atmospheric storage tanks, and for corrosion
10 under-insulation of component external surfaces. It
11 also clarifies some guidance on using the
12 pressurization option for inspection of elastomers
13 that are talked about in GALL AMP 11 and 38. And that's
14 the internal surfaces, and miscellaneous piping, and
15 ducting components.
16 And, also, LR-ISG-2013-01, which
17 documents a new GALL AMP for B- that was developed to
18 manage loss of coating or liner integrity for in-scope
19 piping, piping components, heat exchangers, and tank
20 internal coatings and linings.
21 So, the Staff is currently evaluating the
22 annual update that we received in December, and also
23 the responses to the RAIs, and we will document our
24 evaluation in another document. Don't know what that
25 is yet.

1 MEMBER STETKAR: When you say that B- will
2 it B- you don't know what that is. Supplement 3 to the
3 SER, or what B- I mean B-
4 MS. GREEN: That's a possibility.
5 MEMBER STETKAR: Okay, you don't know.
6 MS. GREEN: I don't think that we've
7 B- well, Mike is the current PM, so let me B- he can
8 answer.
9 DR. SHACK: When do you stop supplementing
10 the SER?
11 MR. WENTZEL: Well, I think that's part of
12 the things we're considering right now. We do have these
13 issues ongoing, and should we decide that we want to
14 issue another supplement, we want to make sure that the
15 appropriate scope and B- we're taking a look at all of
16 the issues that are under review and will make our
17 determination at some point.
18 MEMBER STETKAR: You know, I'm only
19 concerned as far as the Subcommittee's B- if they're
20 dangling things to get tied up, and if there's
21 B- typically, we like to at least have the opportunity
22 to take a look at those to say yes, it doesn't merit,
23 you know, another Subcommittee meeting, something like
24 that. The vehicle by which they're closed out is a
25 little bit important for us to try to follow.

1 MS. GREEN: I think no matter who it's
2 documented, whether it's in another supplement, or if
3 it's just in a letter to the licensee stating what the
4 Staff's evaluation was, that both B- either document
5 would be sent to the Subcommittee.
6 MEMBER STETKAR: Yes. Thanks.
7 MR. BARTON: Are you calling this an open
8 item?
9 MS. GREEN: Well, it's not an open item in
10 the respect that we don't have the information from the
11 applicant. We do have the information from the
12 applicant that we are currently evaluating. We just
13 haven't completed our evaluation, and have documented
14 that evaluation in some form yet. So, it's not an open
15 item in the traditional context of license renewal
16 applications B-
17 MR. BARTON: So, we end the day with still
18 B- no open items against B-
19 MS. GREEN: Correct.
20 MR. BARTON: All right.
21 MS. GREEN: And our review will keep going.
22 And should we reach December of 2015 and, you know,
23 there is no B-
24 MR. BARTON: Okay.
25 MS. GREEN: We will have another update.

1 Actually, we'll probably get an update sooner than that
2 for Indian Point 3, and then one for Indian Point 2
3 probably in December.
4 MEMBER SCHULTZ: So, they're on different
5 B- I'm sorry. Just curious. They're on different annual
6 schedules those updates?
7 MS. GREEN: No.
8 MEMBER SCHULTZ: Or you're saying the
9 update because B-
10 MS. GREEN: They will update because Indian
11 Point 3 will be going into their timely renewal period.
12 And I think if they follow what they did for Indian Point
13 2, they sent in an update specific to Indian Point 2.
14 MEMBER SCHULTZ: That makes sense.
15 MS. GREEN: And then they would probably do
16 the same thing for Indian Point 3.
17 MEMBER STETKAR: Nominally, December 12th,
18 2015, there would be an Indian Point 3 update. Correct?
19 MS. GREEN: Which is when Indian Point 2
20 would also be around the same time, yes.
21 MEMBER STETKAR: Sort of, but that could be
22 December 31st, 2015.
23 MR. BARTON: Yes.
24 MS. GREEN: That's correct.
25 MEMBER STETKAR: Okay. Anything more for

1 the Staff? I'm assuming that the good Dr. Corradini is
2 not on the line.
3 MEMBER RICCARDELLA: You know, in the
4 spirit of not letting Allen off the hook, I'd like to
5 return to these lower support column caps.
6 MR. HISER: Slide 27.
7 MEMBER RICCARDELLA: Slide 27. It's more of
8 a B- I think my comment really is more to do with MRP-227
9 than it is with Indian Point plant-specific. But it
10 seems to me that the relationship between a lower core
11 barrel weld and the tops of these columns is a bit of
12 a stretch, you know. They're totally different types
13 of components, totally different loadings. I'm
14 assuming B- you know, I would assume that the control
15 can load on these lower support columns is seismic load.
16 It would be my guess, you get the core shaking. And if
17 they're significantly embrittled, and you get B- and,
18 you know, we are updating the seismic loads, you know,
19 part of the CS program. I mean, that would be a really
20 bad day if you dislodge the core during an earthquake
21 because these support columns are embrittled.
22 MR. POEHLER: Well, yes. I can B- to
23 comment on linking it to the core barrel weld, the
24 existing C-- the component that it is linked to in the
25 standard MRP-227-A is the control rod guide tube lower

1 flange weld. Actually, which is also not much like the
2 lower support column in terms of, you know, loads, or
3 configuration, or anything else. Some of those lower
4 B- some of the control rod guide tube flanges or cast
5 austenitic stainless steel in certain plants, and in
6 other plants they were wrought stainless steel, and
7 there's also weld involved. But they see very little
8 irradiation compared to the lower support columns, so
9 for any kind of irradiation-related mechanisms they're
10 a poor predictor. They do have stress corrosion
11 cracking as an issue, potential issue, but that's not
12 much of an issue for the lower support columns due to
13 the material, so it was kind of just like that was a
14 B- that's a convenient B- in fact, that component, the
15 control rod guide tube lower flange is a primary, which
16 is linked to several expansion components, not just
17 lower support columns. So, there is B- unfortunately,
18 there wasn't really a good cast component that was
19 readily accessible for inspection, and that would be
20 a good lead component to these lower support columns.
21 So, I think it's something B- you know, the industry
22 is going to rectify that when they issue Revision 1 to
23 the MRP-227.
24 MEMBER RICCARDELLA: I think the issue is
25 not so much the cracking, but the amount of

1 embrittlement. And that you don't even need to have a
2 crack if these columns are really brittle and they have
3 an earthquake loading, you know, you can have a problem
4 without a crack, without IASCC.
5 DR. SHACK: Well, I mean, it is hard to come
6 up with a good surrogate for embrittlement because
7 that's tough to measure.
8 MEMBER BALLINGER: It's got to be a cast
9 component, similar cast component.
10 DR. SHACK: But even then you need to know
11 what the embrittlement level of it is. You really B- you
12 know, it's very difficult in the field. You sort of have
13 to depend on kind of laboratory data that, you know,
14 it's this fluence, it's this toughness.
15 MR. POEHLER: But another thing I was to
16 emphasize is that the applicant choosing a different
17 primary link, that was something that kind of went above
18 and beyond the scope of the action item as far as what
19 you needed to do, because the way the action item was
20 written up in the SE, they could have done a screening.
21 If they had screened out, you know B- if you screen out
22 thermal embrittlement, you can B- you know, you can
23 basically treat it as a wrought material, so we have,
24 you know, plenty of wrought B- you know, most of the
25 components are wrought stainless steel, so the

1 irradiation B- the amount of irradiation embrittlement
2 you expect should be no worse than in a core barrel weld.
3 Although, you know, it's true, it's a completely
4 different B-
5 MEMBER RICCARDELLA: It's the loading
6 B- you mentioned that the Owners Group has done an
7 analysis of these.
8 MR. POEHLER: The Owners Group did B-
9 MEMBER RICCARDELLA: I just wonder if it
10 B-
11 MR. POEHLER: B- an analysis and that, at
12 the time, you know, Indian Point chose to go a different
13 way because B- well, for one, that analysis wasn't
14 completed at the time, but they could probably comment
15 on that more than I could. But what they did was a
16 combination of various things to show that they weren't
17 B- flaws were very unlikely, and embrittlement is
18 B- you know, you're going to at least have some primary
19 component that would be a better predictor.
20 MEMBER STETKAR: Jeff, does the Staff have
21 that analysis, the Owners Group analysis? It's
22 proprietary, so we can't discuss it B-
23 MR. POEHLER: Yes, we do have it now.
24 MEMBER STETKAR: Okay. Maybe one of the
25 things as an action item is to get Ron, and Bill, and

1 Pete a copy of it.

2 MR. POEHLER: Okay.

3 MEMBER STETKAR: At least take a look at

4 what they found. As we said, can't discuss it in this

5 open meeting, but at least if you have it available,

6 you can send it to Kent.

7 MR. POEHLER: Send it through Kent.

8 MEMBER STETKAR: Kent. Okay.

9 MEMBER SCHULTZ: John, if we're finished

10 with the Staff at this point? Yes, I wanted to come to

11 the microphone. When the licensee was making the

12 presentation associated with the examples on program

13 changes, we talked B- I had asked a question about the

14 elastomer degradation, and what the intention was

15 related to that program, and got a B- we were left an

16 open response, so we have a response from the licensee

17 at this time.

18 MEMBER STETKAR: Okay.

19 MR. COX: Yes, this is Alan Cox with

20 Entergy. The item that you were talking about was titled

21 elastomer degradation, and it said something about

22 material replacement. What we have found, the material

23 B- we had added B- it wasn't a physical additional

24 material. We had identified an elastomer material, a

25 non-metallic expansion joint within the condensate

1 system, and we had added that to the table, and added
2 an aging management activity to deal with that. And that
3 was just an update of a component that hadn=t previously
4 been identified.
5 MEMBER STETKAR: Okay, thank you.
6 MEMBER SCHULTZ: Thank you. Appreciate it,
7 Alan.
8 MEMBER STETKAR: Anything else for the
9 Staff? If not, thank you very much, appreciate it. What
10 we'll do now is open B- first I'll ask, are there any
11 members of the public, or anyone in the room here who
12 would like to make any comments? And, if so, come on
13 up to the microphone and identify yourself, and do so.
14 And hearing no stampede, I will open up. Just again help
15 us, if there's someone out there on the bridgeline, just
16 help me to confirm that it's open. Someone please just
17 say hello or something.
18 PHONE PARTICIPANT: The phone line is
19 working.
20 MEMBER STETKAR: Thank you very much. So,
21 you can hear us, but that's the only way that we can
22 determine that, indeed, it's open in this direction.
23 It doesn't have to make sense. So, now we've concluded
24 that it's open. If there's any member of the public on
25 the bridgeline who'd like to make a comment, please

1 identify yourself, and do so. Okay, hearing nothing,
2 I'll close the public comment period.
3 I'd like to really thank Entergy, Indian
4 Point, and the Staff. This was a very, very useful
5 meeting. I think we had a good discussion. I certainly
6 learned a lot. And, again, I know people put an awful
7 lot of effort into this meeting, and I really appreciate
8 that.
9 Before we close, I do want to acknowledge
10 on the record, Dick Skillman, who is you talk to Dick
11 today is B- it was a heroic effort for me to even arrive.
12 He put a tremendous amount of work in, and Kent Howard,
13 in particular, also; the amount of work that they put
14 in to getting this meeting arranged and coordinated
15 certainly deserves acknowledgment, and I really
16 appreciate that. Great job.
17 And with that, if there are no other
18 comments, we are adjourned.
19 (Whereupon, the above-entitled matter
20 went off the record at 2:24 p.m.)
21
22
23
24
25

1
2
3
4
5
6
7
8
9
10
11

Indian Point Energy Center

ACRS License Renewal Subcommittee

April 23, 2015

Entergy®

AGENDA

- Introduction
- Plant Status
- License Renewal Status
- Timely Renewal Activities
- Plant Modifications
- SER Supplement 2
  - Reactor Vessel Internals Program
  - Underground and Buried Piping
  - Program Changes
- Concluding Remarks

Indian Point Energy Center

Indian Point Energy Center Personnel in Attendance

- Larry Coyle — Vice President, Site-IP
- Fred Dacimo — Vice President, License Renewal-IP
- Bob Walpole — Manager, Regulatory Assurance
- Garry Young — Director, License Renewal
- Alan Cox — Manager, License Renewal Technical (ret.)
- Rich Drake — Supervisor, Civil/Structural Engineering
- Nelson Azevedo — Supervisor, Code Programs
- Richard Burroni — Director, Engineering
- Don Mayer — Director, IP1
- William Glew Jr. — Associate General Counsel
- Walter Wittich — Engineering Supervisor IPEC
- Dave Lach — Implementation Project Manager
- Robert Dolansky — Senior Lead Engineer

IPEC Plant Status

- IP2 – Status
- IP3 – Status

- Next refueling outages
  - Spring 2016 (IP2)
  - Spring 2017 (IP3)

License Renewal Status

- Entergy's license renewal application was docketed in 2007
- Indian Point 2 entered the period of extended operation (PEO) on September 28, 2013 and its license remains valid and in effect under the timely renewal provision of federal regulations
- Indian Point 3 will enter the PEO on December 12, 2015, also under the timely renewal provision
- The license renewal project, ongoing for more than 7 years, is very comprehensive. More than 33,000 man-hours of engineering evaluations, procedure development, and inspections for commitment implementation
- Proceedings are ongoing to address 2 state environmental reviews triggered by major federal licensing action (license renewal)
  - US Clean Water Act (Water Quality Certification)
  - US Costal Zone Management Act (Consistency Certification)

License Renewal Status (cont.)

- NRC issued a supplement to the Final Supplemental Environmental Impact Statement (FSEIS) in June 2013. A second supplement is scheduled to be issued in March 2016, with a draft due in July 2015
- The NRC issued a safety evaluation report (SER) in 2009 and supplements to the SER in 2011 and 2014, all supporting continued operation of both units
- There are no SER open items
- The ACRS License Renewal Subcommittee met in March of 2009 and the full Committee met in September of 2009 to review the IPEC license renewal application and SER
- Hearings are ongoing before the Atomic Safety and License Board (ASLB). Thirteen of sixteen admitted contentions have been settled, resolved or appealed. Hearings for the remaining three contentions are planned for later this year

Timely Renewal Activities

Indian Point Unit 2

- Commitments, which include inspections, due before entering the PEO were completed as required
- Subsequent aging management activities are scheduled and completed as IP2 continues through the PEO
- Aging management programs are described in the updated FSAR which was updated prior to entering the PEO

Planned Timely Renewal Activities

Indian Point Unit 3

- Commitments, which include inspections, due before entering the PEO are either completed or scheduled to be completed before December 12, 2015
- Inspections requiring the plant to be shutdown are complete
- Subsequent aging management activities will be scheduled and completed as IP3 continues into the PEO
- Aging management program descriptions will be included in the Updated FSAR before entering the PEO

Timely Renewal Activities (cont.)

LR Commitment 19 –One-Time Inspection (OTI) Program (Required prior to PEO)

IP2 One-Time Inspection Program

- Performed OTI for 437 samples
  - Inspections verified that unacceptable degradation is not occurring
  - The inspections verified the effectiveness of the IP2 Water Chemistry Control, Oil Analysis and Diesel Fuel Monitoring programs to manage the effects of aging during the IP2 period of extended operation

- **IP3 One-Time Inspection Program**
  - 324 total OTI samples required
  - 297 OTIs performed – one observation
  - All 27 one-time inspections scheduled to be performed during the 2015 refueling outage were completed with one observation

Timely Renewal Activities

- **LR Commitment 23 - Selective Leaching (SL) Program**

IP2 Selective Leaching Program

- Performed SL inspections for 46 samples – No evidence of SL for either gray cast iron or copper alloy materials
- Destructive testing/analysis for 7 sample (2 copper alloy and 5 cast iron) – Results of laboratory analysis revealed graphitization in 4 of the 5 cast iron samples. No loss of function occurred.
- Developed new ongoing IPEC Selective Leaching Management Program – Established the program implementation requirements for the identification, monitoring, trending and repairing/replacing components susceptible to selective leaching

IP3 Selective Leaching (SL) Program

- 22 total SL samples required
- 17 SL inspections performed – no findings

Major Plant Modifications since 2009 ACRS Subcommittee Meeting

- Entergy has an ongoing robust capital improvement program
- Since 2009 over 1000 modifications and other plant improvements have been implemented costing nearly $ 600 million
- Examples of modifications are included in the next several slides

Major Plant Modifications since 2009 ACRS Subcommittee Meeting (cont.)

Indian Point Unit 2

- 2010 – Installed vortex suppressors above internal recirculation and containment sump strainers
- 2010 – 2013 Replaced 21 main transformer and rebuilt oil containment moats for 21 and 22 main transformers
- 2012 – Installed cathodic protection system on Condensate Storage Tank supply and return piping
- 2012 – Received license to transfer spent fuel from Unit 3 to Unit 2
- 2015 – Work in progress to install Spent Fuel Pool wide-range level indication
- 2015 – Installed robust Flex Equipment Storage Building (also used for Unit 3)
- 2015 – Work in progress to install FLEX electrical and mechanical connectors

Major Plant Modifications since 2009 ACRS Subcommittee Meeting (cont.)

Indian Point Unit 3

- 2009 – Replaced guide tube split pins
- 2011 – Installed vortex suppressors above internal recirculation and containment sump strainers
- 2011 – Installed cathodic protection system on Condensate Storage Tank supply and return piping
- 2012 – Fuel Storage Building and external roadway modifications to allow wet transfer of spent fuel from IP3 to IP2
- 2012 – Replaced Plant Process Computer with upgraded computer
- 2014 – Completed rebuilding 31 and 32 main transformer oil containment moats
- 2015 – Completed installation of FLEX electrical and mechanical connections
- 2015 – Completed installation of Spent Fuel Pool wide-range level indication

Major Plant Modifications since 2009 ACRS Subcommittee Meeting (cont.)

Site

- New site security perimeter to include
  - 2011 – Vehicle barrier system enhancement
  - 2012 – New Security Owner Controlled Area fence line
- 2012 – New Protected Area security access building
- 2014 – New Plant Access Authorization System
- 2014 – New security central monitoring and alarm system
- 2014 – Removal of most of the Unit 1 stack
- 2014 – Rebuilt the Unit 1 Screenwell house

Reactor Vessel Internals Program

- The NRC has reviewed and approved the IPEC Reactor Vessel Internals (RVI) Program (based on MRP-227-A) as documented in Supplement 2 to the Safety Evaluation Report. The NRC review included the detailed RVI inspection plan that implements the elements of the RVI Aging Management Plan and fulfills License Renewal Application Commitment 30
- Inspections of all MRP-227-A primary components (including over 4700 specific inspections) are scheduled for the Spring of 2016 (IP2) and Spring of 2019 (IP3)
- Industry MRP-227-A inspections performed to date have found no issues with RV internals, other than isolated cracking of baffle-to-former bolts
- Based on the industry OE, IPEC will have a baffle bolt minimum pattern analysis to document that cracking of small numbers of bolts has no impact on the structural integrity of the baffle-former assembly
- IP2 is planning on replacing the split pins during the 2016 refueling outage with cold-worked 316 stainless steel which is degradation resistant. IP3 replaced their split pins with cold-worked 316 stainless steel in 2009

Underground Piping

- Underground piping is defined as below grade, in contact with air and with limited accessibility
- The program was changed to reflect new regulatory guidance
- All underground piping inspections due prior to entering the PEO were completed at IP2. No adverse conditions were identified. All underground piping at IP2 has been coated with a qualified coating
- Approximately 50% of the pre-PEO underground piping inspections have been completed at IP3. The remainder of the inspections are scheduled for this upcoming Summer. No adverse conditions have been identified to date

Buried Piping

- Buried piping is defined as below grade and in contact with soil
- All buried piping inspections due prior to entering the PEO have been completed at both IP2 and at IP3. The inspection results have demonstrated that the piping and the protective coating are generally in good condition. Some minor coating degradation has been identified and corrected
- There have been two exceptions where some moderate corrosion has been identified. One was a 2009 through-wall leak in the IP2 Condensate Storage Tank piping (discussed in the September 2009 ACRS) and the other was degradation in a Service Water line (two areas of degradation) in 2014 at IP3. Both locations have been repaired
- In both instances, the affected piping remained structurally capable of performing its intended safety function

Buried Piping (cont.)

- There is approximately 16,000 feet of buried piping within the scope of license renewal at IPEC (i.e. both units combined)
- We have inspected in excess of 1,000 feet of buried piping at each Unit (2,000 feet total)
- IP2 committed to inspect (direct visual inspections) 20 carbon steel locations prior to the PEO (IP2 does not have any buried stainless steel piping)
- IP3 committed to inspect 11 carbon steel and 3 stainless steel buried piping locations prior to the PEO
- IP2 committed to inspect 14 carbon steel locations and IP3 committed to inspect 14 carbon steel and 2 stainless steel buried piping locations during each of the 10-year period during the PEO

Buried piping - Cathodic Protection (CP)

- As a result of the site geology, a site wide CP system is not feasible at IPEC
- Targeted CP systems have been installed to protect specific areas where vulnerabilities have been identified
- These include some City Water piping and Condensate Storage Tank piping at both IP2 and IP3
- These CP systems provide some corrosion protection but not the full protection because of the non-conductive nature of the IPEC site geology
- The main corrosion protection barrier for buried piping at IPEC is the bitumastic protective coating
- Since the full CP protection levels are not achievable at IPEC, the installed CP systems are not credited in establishing the inspection population which results in a larger direct visual inspection population

Program Changes

- **Examples of program changes**

- **Buried Piping –** Omission and corrections related to systems and components credited in AFW pump room fire (added IP1 river water, IP2 Circulating Water and IP2 Instrument Air)

- **Metal-Enclosed Bus Inspection Program**
  Metal-enclosed bus associated with Diesel Fire Pump is not required to start the diesel since it only provides power to charge the batteries and was removed from program

- **Structures Monitoring Program**
  - sump screens, strainers and flow barriers removed from program if they were changed to stainless steel in an air-indoor uncontrolled environment

- **External surface Monitoring program**
  - some carbon steel piping and filter housing exposed externally to indoor air added to be managed for loss of material by the program
  - carbon steel piping and filter housings and gray cast iron turbochargers exposed internally to indoor air removed from program since they were associated with GT3 which is no longer credited

Program Changes (cont.)

- **Oil Analysis Program** - Added copper alloy greater than 15% zinc (inhibited) heat exchanger tubes which are exposed externally to lubricating oil
- **Tables in LRA revised to add or delete components based on annual update submittals** – programs looking for loss of material due to general, pitting and crevice corrosion, microbiologically influenced corrosion, fouling and lining/coating degradation
- **Elastomer Degradation –** materials added
- **Service Water System** – Plastic piping exposed internally to raw water and externally to indoor air added to a table in the LRA
- **Fuel Oil System** added copper alloy with greater than 15% zinc then removed because GT-3 no longer credited
- **Water treatment plant, City Water system, Lube Oil Systems -** components added

Concluding Remarks

- Unit 3 is being prepared to enter the PEO as was done for Unit 2
- License renewal activities are being or will be conducted as if the plants had received a renewed license
- Entergy continues to make investments into the plants to ensure safe and reliable operation
- IPEC is consistently operating with capacity factors above 90%

United States Nuclear Regulatory Commission

Protecting People and the Environment

Advisory Committee on Reactor Safeguards
License Renewal Subcommittee
Indian Point Nuclear Generating Units 2 and 3

Status Briefing

April 23, 2015

Division of License Renewal

Office of Nuclear Reactor Regulation

U.S.NRC
United States Nuclear Regulatory Commission
Protecting People and the Environment

Presentation Outline

- History of LRA and Staff Review
- Timely Renewal Activities for Indian Point 2 (IP2)
- SER Supplement 2
- Staff's Ongoing Review

U.S.NRC
United States Nuclear Regulatory Commission
Protecting People and the Environment

License Renewal Application

- License Renewal Application (LRA) submitted April 23, 2007
  - Supplemented May 3 and June 21, 2007
  - 16 amendments to LRA
- Operating License Expiration Dates
  - IP2: September 28, 2013
  - IP3: December 12, 2015

Safety Evaluation Report

- NUREG-1930 published November 2009
  - Staff's initial evaluation and findings
  - ACRS letter
- NUREG-1930, Supplement 1 published October 2011
  - Changes to LRA since August 2009
  - Operating experience since GALL Report, Revision 1
- NUREG-1930, Supplement 2 issued November 2014
  - Changes to LRA since August 2011
  - Reactor Vessel Internals inspection plan and program

U.S.NRC
United States Nuclear Regulatory Commission
Protecting People and the Environment

Timely Renewal

- Administrative Procedure Act
- 10 CFR 2.109, Effect of timely renewal application
  - At least 5 years before expiration of existing license
  - Sufficient application
- Existing license will not be deemed to have expired until the application has been finally determined
- Continue to meet all of the regulations and license conditions of the existing license

U.S.NRC
United States Nuclear Regulatory Commission
Protecting People and the Environment

Timely Renewal (cont.)

- Licensee's Voluntary Actions
  - Implement IP2 commitments
  - Update IP2 UFSAR
- NRC's Activities
  - Acknowledgement letter
  - Conducted Temporary Instruction (TI) 2516 inspections

U.S.NRC
United States Nuclear Regulatory Commission
Protecting People and the Environment

License Renewal Inspections

Mel Gray, Branch Chief, Engineering Branch 1, Division of Reactor Safety

Michael Modes, Senior Inspector

Region I

U.S.NRC
United States Nuclear Regulatory Commission
Protecting People and the Environment

License Renewal Inspection Results

- TI 2516/001, "Review of License Renewal Activities"
  - Specific to applicants in "timely renewal"
  - Satisfies completion of IP 71003 inspection requirements
- Conducted 3 license renewal inspections for IP2
  - March 2012: 4 commitments implemented; 2 commitments needed further assessment
  - May 2013: 30 commitments implemented; 11 commitments needed further assessment
  - September 2013: 10 commitments implemented
- No findings identified
- Fall 2015: IP3 Commitment Inspection scheduled

U.S.NRC
United States Nuclear Regulatory Commission
Protecting People and the Environment

Reactor Oversight Process
(IMC 0305)

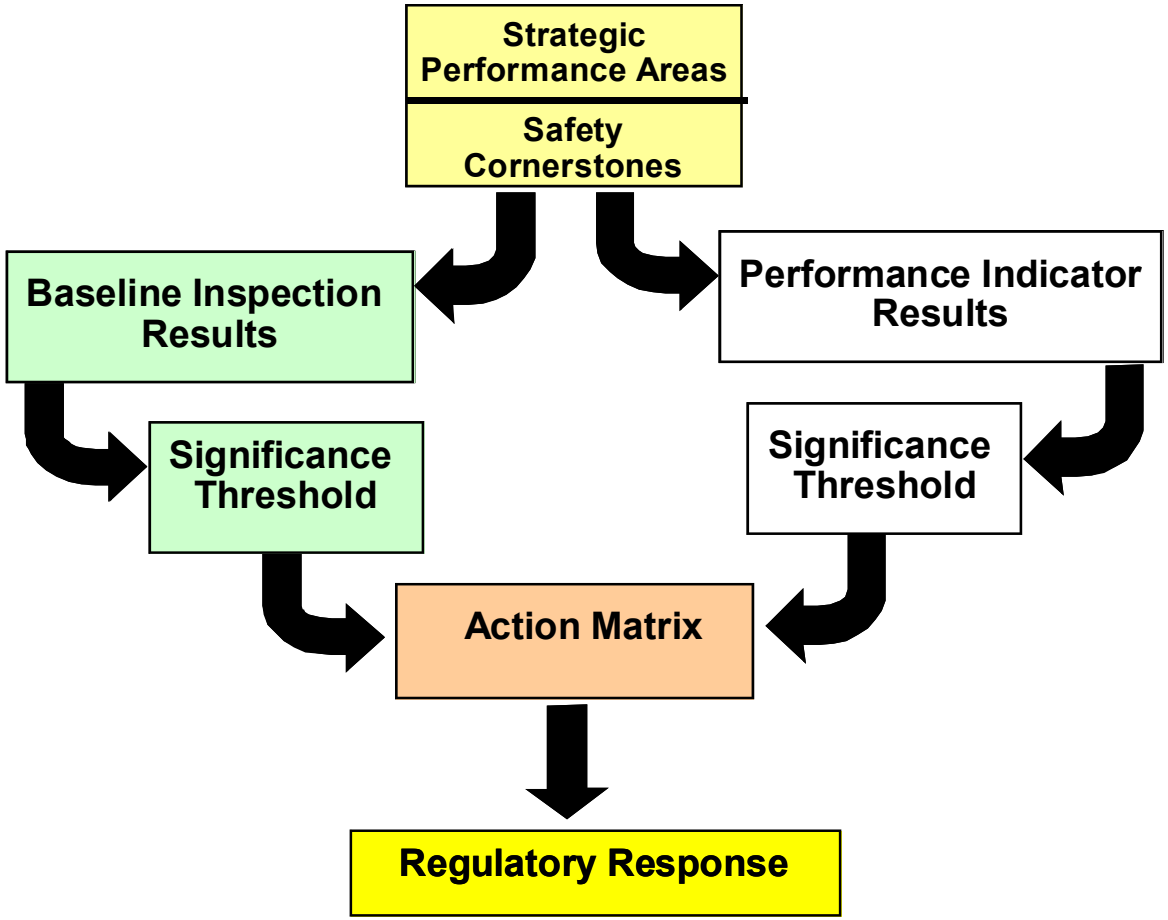

Indian Point Historical Performance

IP2 & IP3 2009-2014

IP3 July 2009 - June 2010 (White PI)

Licensee Response	Regulatory Response	Degraded Cornerstone	Multiple Repetitive Degraded Cornerstone	Unacceptable Performance
All Inputs are Green; Cornerstone Objectives Fully Met	1 or 2 White Inputs; Cornerstone Objectives Fully Met	2 White or 1 Yellow Input; Cornerstone Objectives Met w/ Moderate Degradation in Safety Performance	Multiple Yellow Inputs or 1 Red Input; Cornerstone Objectives Met w/ Significant Degradation in Safety Performance	Overall Unacceptable Performance; Plants not permitted to Operate w/in this Column; Unacceptable Margin to Safety

U.S.NRC
United States Nuclear Regulatory Commission
Protecting People and the Environment

Baseline Inspection Results

- Inspection Results for CY2014
  - Indian Point Unit 2 and 3 performance placed the units in the Licensee Response Column of the Action matrix for all of CY2014
  - Approximately 8300 inspection hours
  - All performance indicators in the Green band
  - 13 findings of very low safety significance (Green)

U.S.NRC
United States Nuclear Regulatory Commission
Protecting People and the Environment

SER Supplement 2

- Supplement 2 to SER issued November 6, 2014
  - Reactor Vessel Internals Inspection Plan and Program
  - Annual Updates in 2011, 2012, and 2013
  - Buried Piping and Tanks Inspection Program
  - Other AMPs
- No changes to time-limited aging analyses
- Conclusion is unchanged
- List of Commitments in Appendix A
  - IP2: completed with exception of three
  - IP3: will be completed by December 12, 2015 with exception of two

RVI Program - Background

- 4/30/2007 – IP2 and IP3 LRA submitted
  - Consistent with GALL Report, Rev. 1
  - Commitment 30 to implement industry program
- 1/12/2009 – EPRI submitted MRP-227, Rev. 0 for NRC review
- 8/11/2009 – NRC issued SER related to license renewal of IP2 and IP3
- 7/14/2010 – Applicant submitted LRA Amendment 9 - AMP for RVI based on MRP-227, Rev. 0
- 6/22/2011 – NRC issued Rev. 0 of SE of MRP-227, Rev. 0

U.S.NRC
United States Nuclear Regulatory Commission
Protecting People and the Environment

RVI Program- Background (cont.)

- 9/28/2011 – Applicant submitted RVI Inspection Plan based on MRP-227, Rev. 0 and SE, Rev. 0, meeting Commitment 30 date
- 12/16/2011 – NRC issued Rev. 1 of SE for MRP-227, Rev. 0
- 1/9/2012 – EPRI submitted MRP-227-A, incorporating Rev. 1 of SE
- 2/3/2012 – NRC endorsed MRP-227-A for referencing in licensing applications related to PWR RVI inspection
- 2/17/2012 – Applicant submitted update to RVI Inspection Plan consistent with MRP-227-A + updated AMP
- 11/6/2014 – RVI Inspection Plan for IP2 & IP3 first approved by NRC staff for a Westinghouse-design reactor

U.S.NRC
United States Nuclear Regulatory Commission
Protecting People and the Environment

MRP-227-A Process

- Generic components for each PWR vendor were evaluated
- Each component screened for eight aging mechanisms
- Screened-in components put through Failure Modes, Effects and Consequences Analysis (FMECA)
- Risk rankings developed based on FMECA
- FMECA results, plus some analytical work, used to develop final inspection recommendations
- All components assigned to one of four inspection categories

U.S.NRC
United States Nuclear Regulatory Commission
Protecting People and the Environment

Reactor Vessel Internals for Typical Westinghouse Reactor

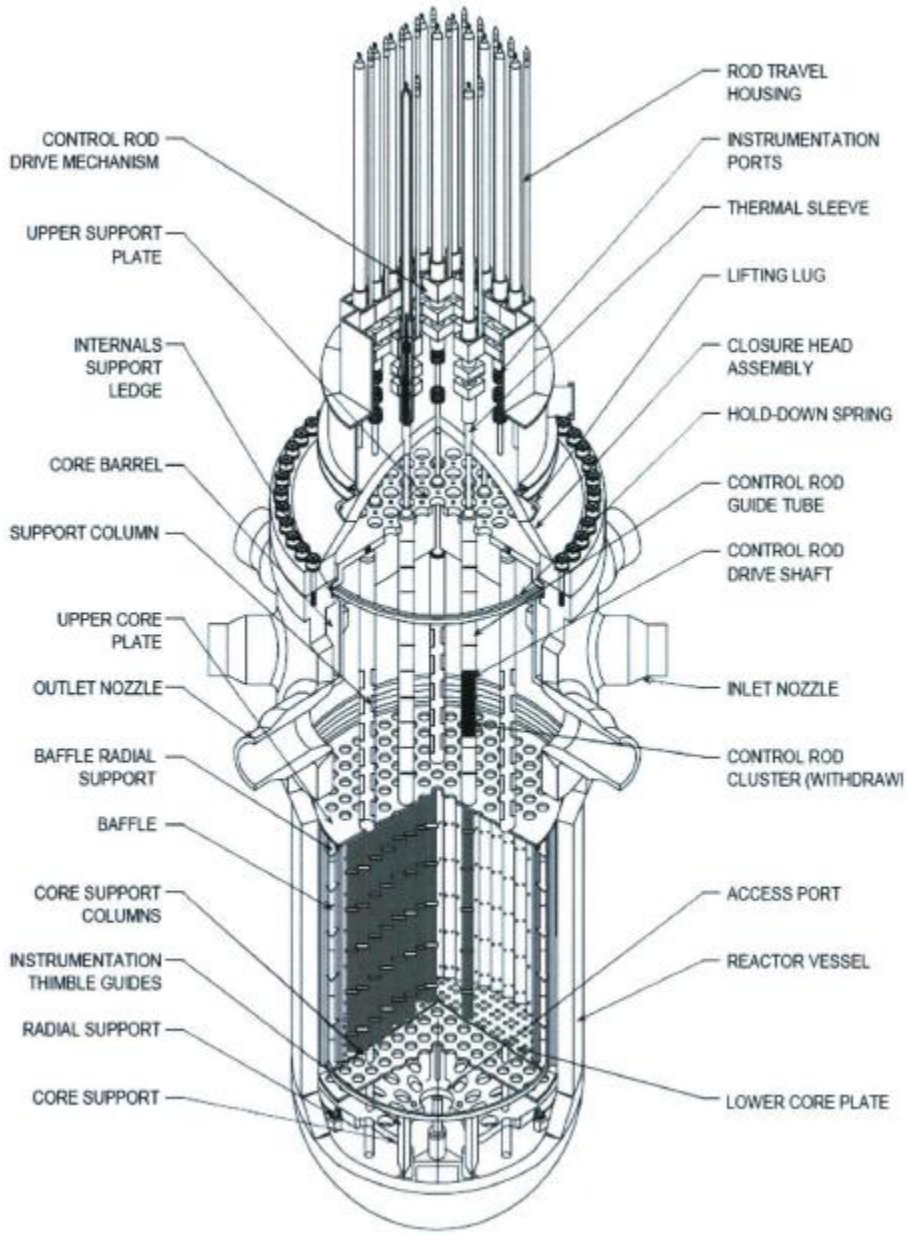

U.S.NRC
United States Nuclear Regulatory Commission
Protecting People and the Environment

MRP-227-A Component Categorization

- Primary – Highest susceptibility category, will be inspected (lead components)
- Expansion – High to moderate susceptibility with some tolerance for degradation. Inspected if degradation found in lead components.
- No Additional Measures – Low susceptibility and/or no functional impact of failure. No augmented inspections recommended by MRP, but may be inspected under ASME Code, Section XI as applicable.
- Existing Program – Susceptible to aging effects, but existing programs such as ASME, Section XI Inservice Inspection deemed adequate to detect aging

U.S.NRC
United States Nuclear Regulatory Commission
Protecting People and the Environment

IP2 and IP3 RVI Program Staff Review

- Staff review concentrated on:
  - AMP Elements
  - Applicant/Licensee Action Items (A/LAIs)
- AMP elements met recommendations of LR-ISG-2011-04, therefore acceptable.
  - ISG updated GALL, Rev. 2 guidance consistent with MRP-227-A
- A/LAIs 1, 2, 3, 5, 7 and 8 applicable to Westinghouse plant such as IP2 and IP3

U.S.NRC
United States Nuclear Regulatory Commission
Protecting People and the Environment

RVI Program

A/LAI 1: Plant-Specific Applicability

- **A/LAI 1**
  - Applicant must assess its plant design and operating history and demonstrate MRP-227-A is applicable
  - Ensure operating conditions assumed for generic components during development of MRP-227-A are valid for the specific plant
  - MRP-227-A basic applicability criteria:
    - Base load operation
    - Low leakage core before 30 years
    - No plant-specific modifications
  - Generic staff concerns that basic criteria were not sufficient led to MRP letter 2013-025 additional criteria:
    - Core design (relates to RVI fluence and temperature assumptions)
    - Fabrication – no cold work (relates to SCC susceptibility)

U.S.NRC
United States Nuclear Regulatory Commission
Protecting People and the Environment

RVI Program
A/LAI 1 – Plant-Specific Applicability (cont.)

- **Applicant Evaluation**
  - Applicant showed IP2 and IP3 meet basic and additional criteria
- **Staff Finding**
  - MRP-227-A is applicable to IP2 and IP3
  - Applicant adequately addressed A/LAI 1

U.S.NRC
United States Nuclear Regulatory Commission
Protecting People and the Environment

RVI Program

A/LAI 2 – RVI Components within Scope of License Renewal

- **A/LAI 2**
  - Recommends applicants ensure that all RVI components within scope of LR are covered by generic components in MRP-191. If not, modify plant-specific program to address the components not covered.
- **Applicant Evaluation**
  - Determined all components
    - Have an equivalent generic component, or
    - Have an equivalent generic component, but different material
  - Plant-specific screening and FMECA for components with different materials – no differences in aging management
- **Staff Finding**
  - Applicant adequately evaluated differences in material, thus applicant adequately addressed A/LAI 2.

U.S.NRC
United States Nuclear Regulatory Commission
Protecting People and the Environment

RVI Program
A/LAI 3: Plant-Specific Programs

- **A/LAI 3**
  - Recommends a justification of the adequacy of plant-specific program, or modify program to manage aging for the PEO
- **Applicant Evaluation**
  - Split pins are only component with plant-specific program for IP2 & IP3
  - IP3 split pins previously replaced with SCC-resistant material (cold-worked Type 316 stainless steel)
  - Commitment 50 to replace IP2 split pins during 2016 RFO
  - Applicant justified replacement date with a statistical analysis of remaining life
- **Staff Finding**
  - Applicant adequately addressed A/LAI 3 based on replacement of split pins with SCC-resistant material (IP3), or commitment to do so (IP2)

U.S.NRC
United States Nuclear Regulatory Commission
Protecting People and the Environment

Split Pin Location

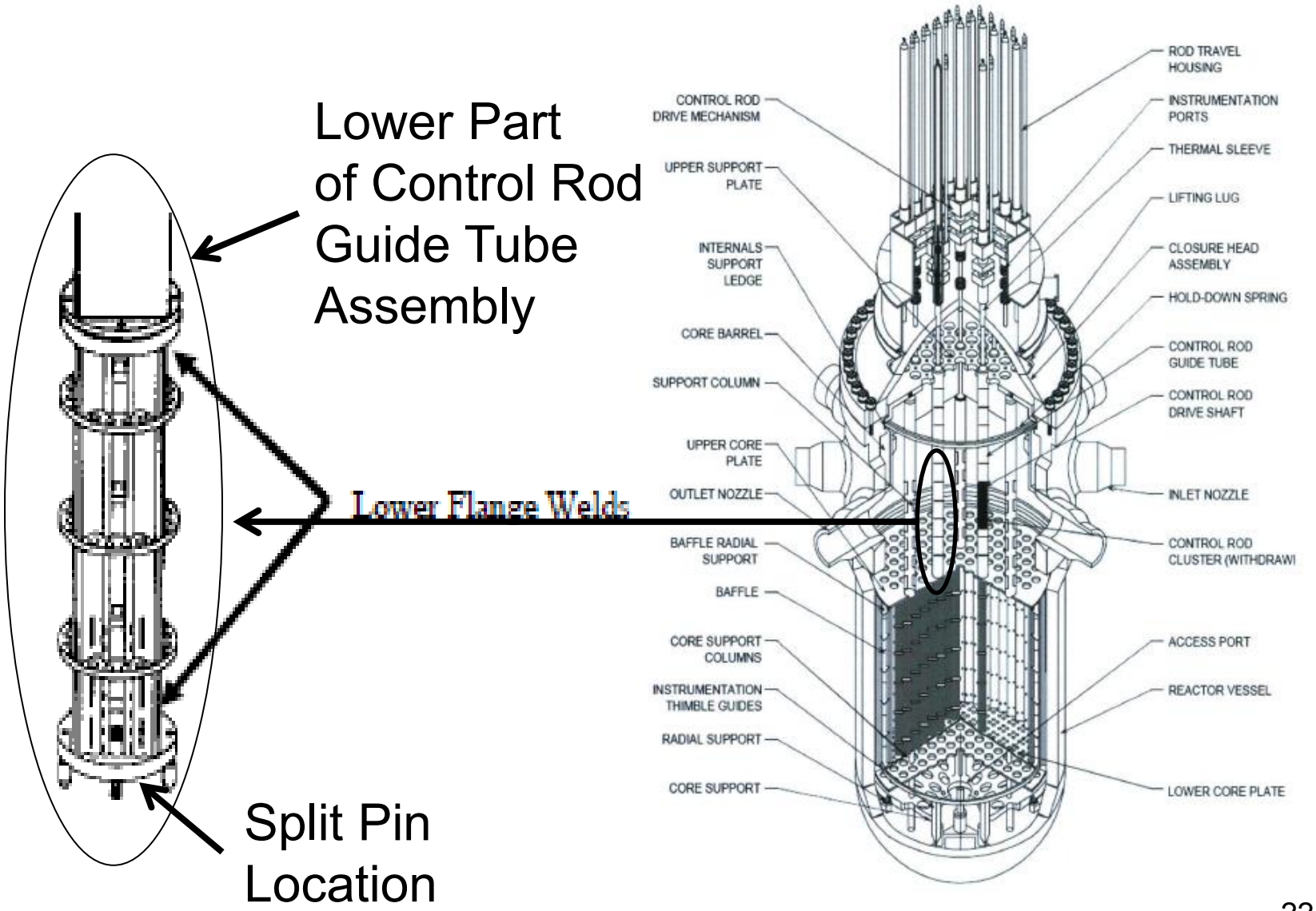

U.S.NRC
United States Nuclear Regulatory Commission
Protecting People and the Environment

RVI Program

A/LAI 5: Application of Physical Measurements

- **A/LAI 5**
  - Recommends licensees identify plant-specific acceptance criteria to be used when performing physical measurements
- **Applicant Evaluation**
  - Applicable to IP hold-down springs
  - Applicant explained how measurements evaluated
    - Linear interpolation between initial and 60-year minimum height to determine acceptable height at first measurement
    - If spring height unacceptable, a follow-up measurement will be performed, or spring replaced
- **Staff Finding**
  - Applicant clarified how acceptable spring height is determined
  - Staff also performed audit of detailed spring height calculation
  - Applicant adequately addressed A/LAI 5

Hold-Down Spring

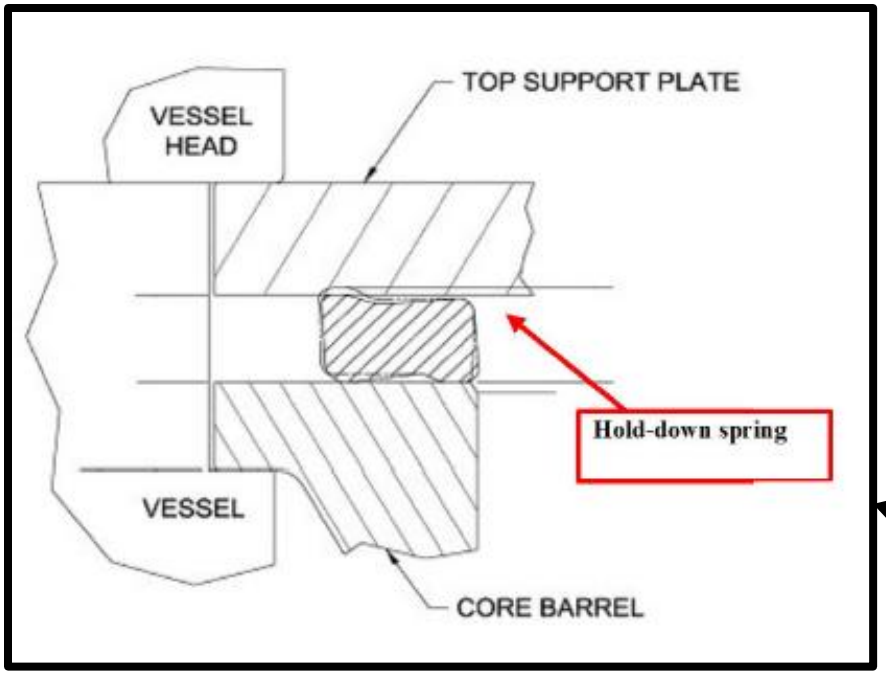

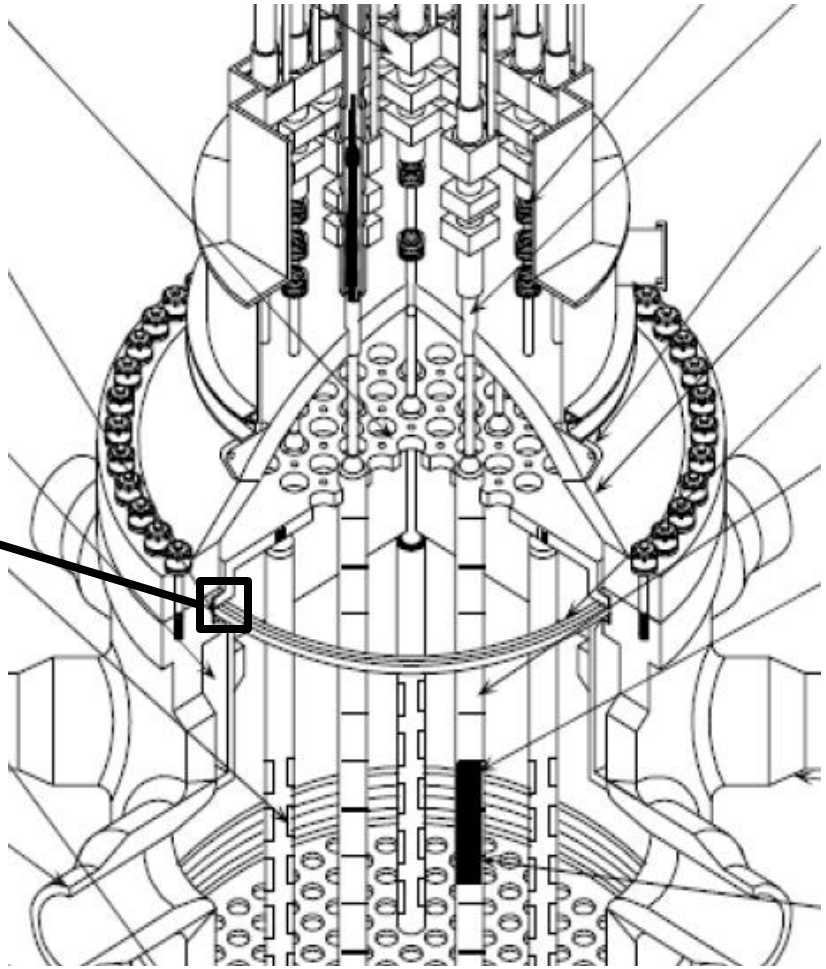

U.S.NRC
United States Nuclear Regulatory Commission
Protecting People and the Environment

RVI Program

A/LAI 7: Plant-specific Evaluation of Cast Austenitic Stainless Steel

- **A/LAI 7**
  - Licensees must demonstrate functionality of CASS components through end of life considering loss of fracture toughness due to thermal embrittlement (TE) and irradiation embrittlement (IE)
- **Applicant Evaluation**
  - Applicable to lower support column caps at IP
  - Initially made Commitment 47 to provide detailed analysis prior to PEO
  - In response to staff RAIs, the applicant:
    - Performed screening for column caps – TE screened out
    - Showed pre-existing flaws in column caps unlikely
    - Showed service-induced cracking of column caps unlikely
    - Provided link to an alternate lead component for IASCC and IE (core barrel lower girth weld)

U.S.NRC
United States Nuclear Regulatory Commission
Protecting People and the Environment

RVI Program

A/LAI 7: Plant-specific Evaluation of Cast Austenitic Stainless Steel

- **Staff Finding**
  - Applicant provided sufficient information to provide reasonable assurance of functionality of the column caps through PEO because:
    - Screened out TE, therefore only IE applicable, column caps thus equivalent to wrought stainless steel
    - Showed pre-service and in-service flaws very unlikely
    - Provided a link to a primary component that is a good predictor for IASCC and IE
  - Applicant adequately addressed A/LAI 7
  - Staff agreed with deletion of Commitment 47

Westinghouse Lower Support Column Bodies

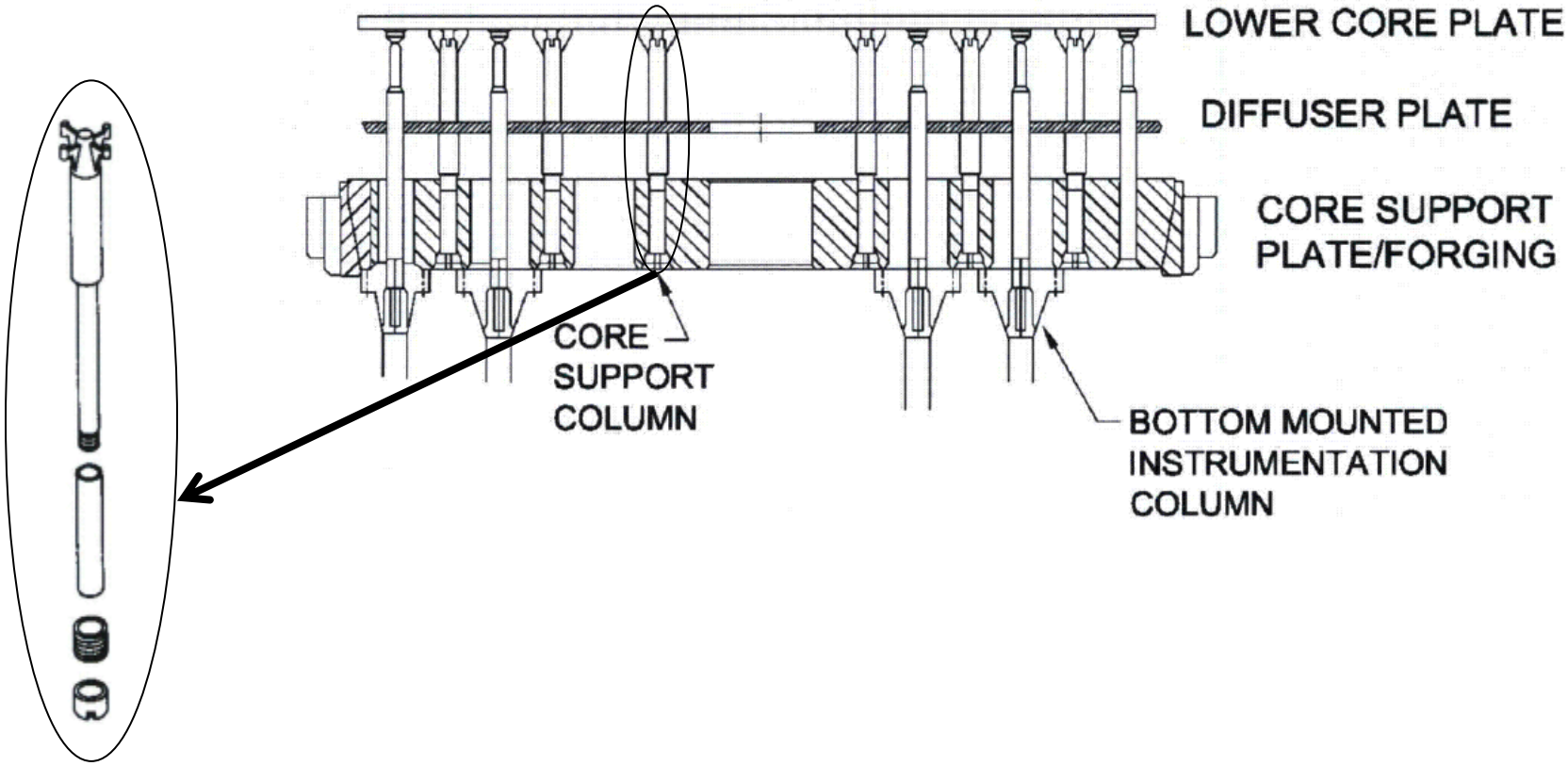

U.S.NRC
United States Nuclear Regulatory Commission
Protecting People and the Environment

RVI Program

A/LAI 8: Submittal of Information for Staff Review and Approval

- **A/LAI 8**
  - Recommends submission of an RVI AMP and Inspection Plan + for current LR applicants, submit FSAR supplement, TS markup and TLAAs related to RVI
  - For fatigue TLAAs, A/LAI recommends these account for reactor water environmental effects
- **Applicant Evaluation**
  - Applicant provided AMP and Inspection Plan
  - Applicant committed to update RVI fatigue TLAAs to account for environmental effects as recommended by A/LAI 8
- **Staff Finding**
  - Applicant adequately addressed A/LAI 8 because it provided the recommended information and made commitment to revise fatigue TLAAs

U.S.NRC
United States Nuclear Regulatory Commission
Protecting People and the Environment

RVI Program Conclusion

- RVI AMP – Applicant has demonstrated:
  - Effects of aging will be adequately managed per § 54.21(a)(3)
  - FSAR supplement adequate per § 54.21(d)
- RVI Inspection Plan implements elements of RVI AMP in an acceptable manner
  - Program is consistent with the generic RVI inspection and evaluation guidelines of MRP-227-A
  - Adequately addressed all of the applicable A/LAIs
  - RVI Inspection Plan addresses the conditions of the final SE for MRP-227, Revision 0

U.S.NRC
United States Nuclear Regulatory Commission
Protecting People and the Environment

SER Conclusion

- "On the basis of its review of the LRA, the staff determines that the requirements of 10 CFR 54.29(a) have been met."
- Additional information provided by Entergy Nuclear Operations, Inc., does not alter the staff's conclusions stated in the SER

Staff's Ongoing Review

- Annual Update in December 2014
  - Changes to plant since December 2013 that materially affect LRA
- RAI response to LR-ISG-2012-02, "Aging Management of Internal Surfaces, Fire Water Systems, Atmospheric Storage Tanks, and Corrosion Under Insulation"
- RAI response to LR-ISG-2013-01, "Aging Management of Loss of Coating or Lining Integrity for Internal Coatings/Linings on In-Scope Piping, Piping Components, Heat Exchangers, and Tanks"