Official Transcript of Proceedings

NUCLEAR REGULATORY COMMISSION

Title: Advisory Committee on Reactor Safeguards Reliability and PRS Subcommittee

Docket Number: (n/a)

Location: Rockville, Maryland

Date: Wednesday, December 14, 2011

Work Order No.: NRC-1339 Pages 1-258

NEAL R. GROSS AND CO., INC.
Court Reporters and Transcribers
1323 Rhode Island Avenue, N.W.
Washington, D.C. 20005
(202) 234-4433

UNITED STATES OF AMERICA

NUCLEAR REGULATORY COMMISSION

+ + + + +

ADVISORY COMMITTEE ON REACTOR SAFEGUARDS

(ACRS)

+ + + + +

RELIABILITY AND PRA SUBCOMMITTEE

+ + + + +

OPEN SESSION

+ + + + +

WEDNESDAY,

DECEMBER 14, 2011

+ + + + +

ROCKVILLE, MARYLAND

+ + + + +

The Subcommittee met at the Nuclear Regulatory Commission, Two White Flint North, Room T2B3, 11545 Rockville Pike, at 8:30 a.m., John W. Stetkar, Chairman, presiding.

MEMBERS PRESENT:

JOHN W. STETKAR, Chairman

DENNIS C. BLEY, Member*

CHARLES H. BROWN, Member

MICHAEL L. CORRADINI, Member

JOY REMPE, Member

NRC STAFF PRESENT:

JOHN LAI, Designated Federal Official

JAMES CHANG, RES

RICHARD CORREIA, RES

SEAN PETERS, RES

JING XING, RES

ALSO PRESENT:

VINH H. DANG, PSI

JOHN FORESTER, SNL

STACEY M. L. HENDRICKSON, SNL

STUART LEWIS, EPRI

GARETH PARRY, ERIN

APRIL M. WHALEY, INL

*Participating via telephone

T-A-B-L-E O-F C-O-N-T-E-N-T-S

WELCOME/OPENING REMARKS:

John Stetkar, Chairman 4

SRM-061020 ON HRA METHODS:

Richard Correia, RES 6

Jing Xing, RES 6

Stuart Lewis, EPRI 37/63

Vinh Dang, Paul Scherrer Institute . . 48/90

Gareth Parry, ERIN 103/172

Stacey Hendrickson, SNL 139

April Whaley, INL 141/166

MEMBER COMMENTS: 239

ADJOURN:

John Stetkar, Chairman 258

P-R-O-C-E-E-D-I-N-G-S

8:31 a.m.

CHAIR STETKAR: The meeting will now come to order.

This is a meeting of the Reliability and PRA Subcommittee. I'm John Stetkar, Chairman of the Subcommittee meeting.

ACRS Members in attendance are: Mike Corradini, Joy Rempe and Dennis Bley is joining us via phone line. John Lai of the ACRS staff is the Designated Federal Official for this meeting.

The Subcommittee will hear the latest developments on HRA methods and applications in response to the Commission's SRM-M062010.

We will hear presentations from the NRC staff and NRC contractors. They will be upon bridge line. To preclude interruption of the meeting, the phone will be placed in a listen-in mode during the presentations and Committee discussions.

We received no written comments or requests for time to make oral statements from members of the public regarding today's meeting.

The entire meeting will be open to public attendance.

The Subcommittee will gather information,

analyze relevant issues and facts and formulate proposed positions and actions, as appropriate, for deliberation by the full Committee.

The rules for participation in today's meeting have been announced as part of the notice of this meeting previously published in the Federal Register.

A transcript of the meeting is being kept and will be made available as stated in the Federal Register Notice. Therefore, we request that participants in this meeting use the microphones located throughout the meeting room when addressing the Subcommittee.

The participants should first identify themselves and speak with sufficient clarity and volume, so that they may be readily heard. And I think before we begin, Joy, you --

MEMBER REMPE: Yes.

CHAIR STETKAR: -- need to --

MEMBER REMPE: Mr. Chairman, I have to acknowledge that I do have some organizational conflict of interest issues and I'll have to limit my discussion accordingly.

CHAIR STETKAR: Okay. Thank you. And, Dennis, you also?

MEMBER BLEY: Yes. Although I have not been directly involved in either of the two -- preparation of either of the two documents that we were given for today, I have been involved in things that led to them and in related activities, so I have a conflict and I will keep my comments only to points of clarification information.

CHAIR STETKAR: Thank you. We will now proceed with the meeting. And I call upon Rich Correia.

MR. CORREIA: Good morning. Thank you. Rich Correia, Director of the Division of Risk Analysis and Research. Today's meeting is a status meeting on HRA work, since the last meeting in April, I believe. And we are looking forward to the Members' feedback on what we have accomplished so far. Thank you.

CHAIR STETKAR: Good. Jing?

DR. XING: Okay. Thanks, John, you remembered my name.

CHAIR STETKAR: It's in front of you there. I'm looking and I remember it's Wednesday.

DR. XING: Okay. I'll still briefly introduce myself. I'm -- as you all know, Erasmia Lois had been the project manager for this activity

and she recently had a family issue, so I was called in to fill in her responsibility in this project.

And I'm a senior human performance engineer in the Division of Risk Analysis, Human Factors and Reliability Branch, same place as Erasmia in.

And part of my job responsibility is to improve integration of HRA and the human factors.

So for the last three years, I had been closely following this project as part of my learning process at HRA. And I was also in the U.S. Empirical Study Team as an analyst.

So for the last six months, I had been assisting Erasmia in -- technically in oversight of late term year activity, because that's my major involvement for this activity.

Okay. So today, I will briefly give you the big picture about this project from the NRC's perspective. And then next the staff talk to you about new developments.

Well, so does anyone need I read this SRM? No? So I just skip.

Okay. So SRM direct ACRS and the staff to look to existing HRA method to make a recommendation, which method or which set of methods we should use.

As my initial effort, staff will review the existing method, HRA method and identify the strength and the weak -- and the limitations in those methods as I indicated in those work reports if each of them representing one method. The green color representing the strengths of good features. And the brown color represents the limitations of the method.

Ideally, we wish we can find the one method that is fully great, so we could recommend it. But the reality is it's a good features and the limitations are best distributed in various methods.

Therefore, the staff taken the approach by taking the good features from this existing method and put them together to develop a systematic HRA structure and also develop a technical basis for this structure, how to do it with HRA work.

And also, taking the insight we gain from HRA good practices and to empirical HRA studies. The team identified this decayed limitations that need to be improved. And so made the development effort to improve those.

So as far as the deliverable, all this effort that were result in three parts of the deliverable as we state here. At a high level, we're delivering -- producing a general HRA structure to

formalize the HRA process. And also developing the -- taking from existing method and accompanying literature to develop a technical basis for doing a good HRA work-up.

And the next level we develop is user guidance and example analysis to guide analysts how to follow the structure we are proposing. And it's a very detailed level where they take those good features and existing methods and develop those off the off-the-shelf implementation tools for easy use.

So it's including you were stating cool response trace for failure modes, addition trace and human failure probabilities. Therefore, the analyst don't have to develop this from scratch.

Putting all these three parts together, it's a new method, which, for now, we call IDHEAS. This is Erasmia's idea. So it's called the Integrated Decision-tree Human Event Analysis System.

So for the scope of these deliverables and, you know, many existing in method focused on analyzing the internal events and procedural operations.

So for this project, we target the integrated method at a broader scope of application, so such as lower power and shutdown, external hazard

and the Level 3 PRA, you know, in order to meet the NRC's regulatory meaning.

So the kind of deliverable general structure and technical basis actually is applicable to all data situations, just the human arguments. And strategically, for the detailed guidance and the implementation, we started by developing the base things for internal event, internal at-power event, because that's where the -- for two reasons.

One, that's where most existing method focused on, so we can also check our method to make improvement.

And, two, that's an area we have the most detailed analogy about how the systems behaves to our human response. So it's a good start.

However, the methodology of developing this guidance and the implementation tool is applicable when we move to the broad scope. So when we move to the broad scope, it will continue development and a small strategization, so it's not like we are starting new project from scratch.

CHAIR STETKAR: Jing?

DR. XING: Yes?

CHAIR STETKAR: Quite frankly, I see a real danger in the limitations that you bought

yourself into for looking at only full-power operation, control room procedure-driven events, because I see -- you have to excuse me, I have a cold, so occasionally I'm going to not be able to speak very well.

DR. XING: Okay.

CHAIR STETKAR: By the way, before I forget, for the record, we have been joined by Member Charles Brown without your normal doughnut.

MEMBER BROWN: They were out.

CHAIR STETKAR: It's a tradition.

MEMBER BROWN: On the Beltway.

CHAIR STETKAR: Anyway, I see a bit of a danger only because I see kind of a creeping notion of the importance or let's say emphasis on procedures.

DR. XING: Yes.

CHAIR STETKAR: And other domains, if you want to call them that, for example, in some cases low-power and shutdown, particularly shutdown may not have as well developed procedures. Certainly, assessments of risk from internal assets, fires, floods, external events, seismic events, high winds, tornados, and an extension of the methods to examine things like severe accident mitigation --

DR. XING: Yes.

CHAIR STETKAR: -- extreme events, which, in principle, should also be handled by any type of integrated methodology, because, after all, we are evaluating people not a particular --

DR. XING: Yes.

CHAIR STETKAR: -- scope of a PRA. So I'm a bit concerned about restricting the practical aspects in the sense that we shouldn't be developing different methods for different scopes of the PRA. That we are going to think about a different methodology, fundamentally different methodology that may apply.

And I'm sure you're aware of the work that is going on in NUREG-1921 for the HRA to support the fire work that's ongoing.

DR. XING: Yes.

CHAIR STETKAR: And I see kind of disturbing differences between the way this project is evolving and the way that project has developed. And I know that that's not part of the presentation, but I'm going to keep bringing you back to that.

DR. XING: Yes.

CHAIR STETKAR: Because after all, it is 2012 and our charter in the SRM was to develop some sort of cohesive method that, in principle, should

apply across the board for the entire scope. So I don't know if you have any comments on that right now. I kind of wanted to get it on the table, because it is a concern that I see as I start reading more of the details of the implementation.

DR. XING: Yes. Okay. So I'll just ask the question.

CHAIR STETKAR: And maybe as this presentation is going along --

DR. XING: Yes.

CHAIR STETKAR: -- you know, we may want to discuss that.

DR. XING: Yes, that's a very important issue, so I'm sure as the presentation go along, you will see some part generally applicable.

CHAIR STETKAR: Okay.

DR. XING: Some part need an extension. But I like explain that a little bit up front then.

CHAIR STETKAR: Okay.

DR. XING: So basically, as you see, for the generic structure how we formalized the process for how HRA should be done. That's really to narrow it and applicable to all the case. So it's a technical basis. And a big portion of the technical basis is what reveals the combining literature to try

to have a thorough understanding how human fail and the various conditions.

That is really no difference between the focus and the broad scope of application. And the difference is in the next stage when it goes to the back of those details, such as implementation, of course. For example, we would like to develop a decision-tree identifying those crew failure modes and to develop a decision-tree for each of those crew failure modes. And a definite estimation of preliminary estimation of human failure probability for that particular failure mode.

For this kind of development, we would need to be specific reference to assert special circumstances, that's where we find the -- for the internal at-power event if we have more information there. So however, even for that part of development, it taken from two lines of information.

One line of information is operation analogy, how operators react in base circumstance. We have procedures there.

Another line of information is from the literature review, which tells you how human failure. So we cross-checked this here. This is operational situation which can trigger a human failure. So that

methodology would equally apply to a more broad scope.

And however, if we move in a broad scope, for example, the situation you mentioned like nitro hazard situation, and in a situation like that, the decision making process will be very different from the current in the control room at-power situation.

So in the at-power situation, the whole -- it's the crew make this decision. They decide which procedures they go. They share the same amount of -- same set of information, have the same set of goals. But in the hazardous situation, it will be very different.

Therefore, some failure mode we identified for the focus for the at-power situation will need to be expanded, briefed in more details. Like right now, we have one failure mode for all conflict, you know, which you were saying in the presentation.

In a situation like that, you will have very detailed -- we probably need the first more -- several more failure modes to cover the detail aspects of the different achievement or have different goals.

So that's the way we consider that would we need continued development and expansion. But the methodology, how we develop this guide -- how we develop this failure mode, how we develop decision-

tree that were applicable to the broad scope.

MR. PETERS: And, John, this is Sean Peters, Branch Chief for -- Unit Faculties Branch. I agree with what Jing is saying. The overall structure and framework that we're developing is -- we're basing it on at-power, you know, proceduralized actions, but we are looking at expanding this into our Level 3 analysis that we are proposing to the Commission.

And looking at low-power shutdown conditions and --

CHAIR STETKAR: Well, one of the reasons that I bring this up is that Level 3 initiative, normally, has a schedule of four years.

MR. PETERS: What year is that?

CHAIR STETKAR: The last I checked, this SRM has a 06 number on it. We have been working on this now for five years and we haven't even got through how to handle full-power kind of procedure-oriented things. So we are going to need to tackle that broader scope immediately.

MR. PETERS: Yes.

CHAIR STETKAR: And we want to be sure that the methods are either flexible enough or are forward thinking enough that we don't get into a situation that, in fact, the industry has been in for

20 years, where we have one method that may apply for this type of action and oh, my God, we have a different type of action. We need t think about that differently.

And I agree with Jing. The overall structure, especially the literature research and the emphasis on factors that affect human performance should be universal.

So my only concern is that as we get into the details, the important part from a practitioner's perspective of how to actually construct the models and how to develop estimates for the human error probabilities, that we don't box ourselves into a corner such that, you know, in 2013, for example, halfway into the Level 3 PRA we say well, we really don't know how to handle human reliability for all of those other types of issues.

So that's --

MR. PETERS: I think it --

CHAIR STETKAR: It is a forcing function. That Level 3 PRA is a forcing function.

MR. PETERS: Yes, I think it is and, in fact, just from the schedule, they were telling me 2013 is when we have to be done. So it's not even halfway and it's --

CHAIR STETKAR: Yes. Okay.

DR. XING: Yes. In fact, that particular application purpose to meet the Level 3 PRA time line, Erasmia and I had a couple of meetings to try to identify what is the basis of development that we would need for Level 2/3 PRA.

And over the next, we will coordinate with the Level 2/3 PRA Team and work on the details, so we can give you a plan after that.

CHAIR STETKAR: Okay. Because that's -- I think it is time-sensitive here. I know it's --

MEMBER CORRADINI: Can I ask a question or maybe you're going to cover it. So as you move from at-power to low-power to shutdown to more unplanned extreme events, where do you -- in what venue do you test out these guidelines? How do you know they are right?

DR. XING: That's a very challenging question, I have to admit.

MEMBER CORRADINI: Well, I mean --

DR. XING: So far I have --

MEMBER CORRADINI: -- I think I can guess it with full-power, but eventually as you get into the things that are a bit more extreme and a wider range, where do you check that what you estimate by a model

has some semblance to how the people will actually benefit?

DR. XING: Okay. I speak for my --

MEMBER CORRADINI: You don't have to cover it now.

DR. XING: Yes.

MEMBER CORRADINI: If, eventually, we are going to get to that, that's fine. I just -- where I start losing it is as I get into these rare events. So if it's going to happen later today or later this morning, that's fine.

DR. XING: Yes.

CHAIR STETKAR: It's a relevant point.

DR. XING: Yes.

CHAIR STETKAR: As I read through these things, I keep -- we are all aware of -- well, maybe not all aware, but HB Robinson had a really interesting fire and that fire and the performance of the operators during that fire scenario is a wonderful case study in the application of human reliability methods.

So as I read through these things, I keep thinking about how would these methods evaluate that fire event?

Now, it happened to be a fire, but there

were many, many other complex things happening. Failures to follow procedures, failures to see indications.

DR. XING: Yes.

CHAIR STETKAR: Crew conflicts, all the types of things you talk about.

DR. XING: Yes.

CHAIR STETKAR: And if the methods can't reasonably handle that fire, we failed. I think if the methods can handle that type of fire scenario, then -- I don't want to say necessarily, you know, you can't predict with precision what the human error probability will be, but if the methods are flexible enough, you can say yes, indeed, all of the elements in the methods can handle what was happening in that fire scenario, I think we have succeeded, because it is just a really interesting event.

And I just keep --

DR. XING: Yes.

CHAIR STETKAR: -- kind of running that event through my mind as I read through the guidance and say well, you know --

DR. XING: Yes.

CHAIR STETKAR: -- it doesn't seem adequate enough. It's a valid question, Mike. There

is no absolute benchmarking.

MEMBER CORRADINI: No, I didn't expect there was one. But I guess my thought would be that this -- at least I view this as no different than other evaluation models that eventually you are going to have to test it against something.

CHAIR STETKAR: Yes.

MR. PARRY: Could I? I just had a comment here. This is Gareth Parry. I think what you just said, John, was perhaps a little different. I think, you know, one of the things we are developing is a method for predicting human error probabilities. But I think in constructing the method that we use for the quantification, then we can also use the elements of that for event interpretation.

I think one of the ways we can test it is if the factors that we see in real events have been determined effective human behavior, if they are not present in the model, then the model is deficient.

If they are present, at least that's some sort of face validity.

CHAIR STETKAR: Probably a better way of saying the same thing, I think, that I keep that event kind of drumming in my head as I look at elements of the model and say does the model have enough elements

in it? Is the model bias in, you know, one direction or another in terms of emphasis on a certain, let's say, framework for the way humans perform that may not necessarily be supported by some of these events.

But I think we are saying the same thing, just from a little bit different perspective here.

DR. XING: I was going to say the same thing, too, from another perspective. What I read from the Robinson's event report, even the initial event, the fire, is different. But I see lots of human errors in that event.

Similar to some of the international benchmark study made like the RCS cooling too fast, that was human. And there is individual human events -- human errors made in the event are covered in the method that we are demanding now.

But there is still a trend to how we put all this together --

CHAIR STETKAR: Right.

DR. XING: -- to model that. Okay. I think you are all concerned on where we are in the project as a status here.

So here is an over-simplified diagram to show where we are. And you will --

CHAIR STETKAR: This is good, because we

are moving forward. That's excellent. The date is on the bottom, so we are appropriately flexible.

DR. XING: Yes, just like, I mean, research and development of the project, we can put our project in three phases: Initial design and the development; view of prototype and the verification testing.

So for the general structure and technical basis, so we are in the prototype stages. So apart -- develop, as you say, in the human report represented.

And for the guidance and the detail implementation, some part of this we have a prototype like we have an example of the CRT. We have identified the -- a full set of failure modes, but some are still in the developing stage.

Like we have constructed some deficient space, but not yet for every one. We have to do the HEP, it's variable probability estimation.

But overall, I think it's a major accomplishment that we had over the past six months. Since the last meeting, one, is that we move each of these bar into the prototype stage. And two is, we are putting these different pieces together. We begin doing that. So, therefore, because we have this prototype and have a preliminary effort of putting all

these pieces together, so we are ready for verification and the testing, while we are still doing the continued development of some other parts.

This is also -- go ahead, you have comment?

CHAIR STETKAR: No, no comment.

CHAIR STETKAR: Yes, this is also an effort concentrated to meet the Level 2/3 time line, so we are not wait for everything fully developed in testing. For the next stage, we will begin to do verification testing.

So, in fact, I vision two report we submitted and this meeting today is our initial effort of verification, looking for your "status" input if this prototype work or where the problems are likely with it.

CHAIR STETKAR: Okay.

DR. XING: Already pointed out.

CHAIR STETKAR: Do you -- I'm sorry, go ahead.

MEMBER BROWN: No, I was just going to ask on the verification part of it, is this -- following up on and just trying to understand your point and one of the other comments we had. Verification is not a real-time taking scenarios and then implementing them?

It's going back and looking at events and trying to say does the model, using your terms, include things that were tracked during the event? And would our model have included and/or predicted results out of an already occurring event, based on the knowledge you have of that event?

I'm just trying -- the verification of these kind of things seems, to me, to be kind of hard. You know, you want to try to stage a simulation that is kind of canned.

CHAIR STETKAR: Right.

MEMBER BROWN: So I -- that's what I was trying to get out of the interplay between the three of your all's comments.

MR. PARRY: Well, I think verification is really tricky in this area. Really, all you can do is to see whether the factors that you observe that have affected human performance are present and accounted for in the model.

We are not going to ever have verification of the HEPs that come out of this, because --

MEMBER BROWN: HEPs? Say that again.

MR. PARRY: Sorry. Human error probabilities.

MEMBER BROWN: Oh, HEPs. Okay.

MR. PARRY: Yes.

MEMBER BROWN: I got that. I thought you said A. I apologize for that.

MR. PARRY: We are not ever going to get that for these types of events. I mean, the events that occurred operators either succeeded or they failed and in most cases, they succeed thankfully, eventually anyway.

So I think we have to recognize that perhaps the best we can do is to demonstrate, based on real events and based on the knowledge of the literature of -- concerning how human performance is affected, that it is represented appropriately in the model. I think it will eventually become a consensus of some sort that we can use.

CHAIR STETKAR: I think to some extent, you know, looking at real events, kind of like the empirical benchmark studies or --

DR. XING: Yes.

CHAIR STETKAR: -- whatever you want to call them, but taking actual events, you know, I use the Robinson fire, but take another fairly -- two or three fairly interesting events, give them to a few teams using this methodology and at least see if they focus on similar factors that would have affected the

observed errors, I think would be a good test.

You know, essentially --

MEMBER BLEY: John, can I put something in?

CHAIR STETKAR: Yes, hold on a second and let me just finish a thought here.

Essentially, the whole purpose of the SRM is to try to develop (A), you know, a more holistic-- essentially, a consensus methodology that will be used and reduce variability in all of the human, you know, reliability analyses.

So at least one element of that methodology in an application should be -- regardless of the numerical values, because you're right, you can't benchmark those in a sense. Would the methodology at least point a range of practitioners, not anybody in this room, but practitioners, to identify the key -- either performance influencing factors or other error-forcing measures that were observed during those actual incidents?

MR. PARRY: So in other words --

CHAIR STETKAR: And I think that's a way of --

MR. PARRY: Yes.

CHAIR STETKAR: -- at least gaining some

confidence in the qualitative --

MR. PARRY: Right.

CHAIR STETKAR: -- part and the kind of the logic model, the reduction, if you will, to --

MR. PARRY: So in other words, paraphrasing what you said, I think, can the tool that we develop be used as, essentially, a root cause analysis tool?

CHAIR STETKAR: Yes, if --

MR. PARRY: In that human performance sense.

CHAIR STETKAR: In a human performance sense.

MR. PARRY: Right.

CHAIR STETKAR: I mean, that's one way that I can see of at least gaining confidence in this verification.

MEMBER CORRADINI: Can you --

CHAIR STETKAR: Hold on a second, Mike.

MEMBER CORRADINI: -- say that again? Just repeat it, just so I understand it. Can you guys -- can you say it again, just so I understand what you mean by verification?

CHAIR STETKAR: Let me let Dennis --

MEMBER CORRADINI: Okay.

CHAIR STETKAR: Because he has been waiting patiently.

MEMBER CORRADINI: Okay.

CHAIR STETKAR: Dennis?

MEMBER BLEY: Yes. Just a couple of things and a question for the team there. I happen to agree with some of what Gareth said. There were elements of the Robinson event in the last of the benchmark studies, the U.S. Benchmark Study, and I know the folks developing this methodology did not directly participate, but they followed along and, I think, at least tried some of the parts of this methodology on the benchmark.

And I wonder if they are comfortable with saying anything about that, at this point?

DR. XING: John?

MEMBER CORRADINI: John, is your speaker on?

CHAIR STETKAR: It is.,

MR. FORESTER: John Forester, Sandia Labs. Dennis, in response to your question, I don't -- there was a few aspects of some of the ideas from the SRM Project that were tested a little bit in the domestic study, but there was no -- I mean, it wasn't a state where we could do any really systematic testing of

that methodology.

So I would say I know that in April and some of the analysis they were doing, they did work -- they did -- used Crew Response Trees as one way to represent the structure of the event and then analyze it from that perspective. But the methodology we are actually proposing was not tested at that situation.

MEMBER BLEY: Okay. Well, if there is anything from that that during the day, even the Crew Response Tree effort, that could be illustrated through the -- by example, I think it would help the Committee, that's all. Thanks.

DR. XING: Okay.

CHAIR STETKAR: Now, Mike, in response to you, I think Gareth -- you know, this will probably come out during the presentations a little bit more. But I really think that if -- the whole purpose of this method is to provide a more cohesive framework so that a broad spectrum analyst with different levels of experience can, with reasonable consistency, focus on at least the basic elements that will affect human performance. Is that a reasonable characterization?

The numbers are important, but the numbers -- if you believe in the first part of the effort, the numbers will evolve out of that effort. If we examine

that methodology in the light of actual events and if the methodology will point an analyst to the, let's call it, performance influencing factors or the other causes for errors that were actually observed in that event, because people have done root cause analyses on those events --

MEMBER CORRADINI: Oh, okay.

CHAIR STETKAR: If there is good agreement there, there is good confidence that, indeed, the methodology is working. If there is disagreement or wide variability in the analyst's application of this methodology, that says we have a problem.

MEMBER CORRADINI: Okay. I get it now. Thank you.

CHAIR STETKAR: Because either the methodology isn't working in a fundamental sense and the fact that, in a sense, that we aren't getting agreement between the predicted root causes and the observed root causes or the methodology isn't solving the other purpose of the SRM, which is to enforce greater consistency among various analysts.

So I think that that element of the verification and testing process is an important element, regardless of the number generation.

DR. XING: Okay. Thanks. Just briefly

concluding our discussion of this part, and we have started making plans about verification testing and a lot of input we just heard is really good to compliment our plan.

So we will now talk about this, that's not the focus of the presentation today, but we would like to communicate with you over the next couple of weeks on --

CHAIR STETKAR: Oh, okay.

DR. XING: -- what we think we can do for the verification. Just for example, one very useful resource agent, we have a -- our branch have a parallel project, HR data collection. And we already had a lot of useful information there we can -- and I myself and the team leader, James Change, that project, we are going to work together and try to see how we verify for each other.

CHAIR STETKAR: That's one way of benchmarking numbers.

DR. XING: Yes.

CHAIR STETKAR: The only problem is those numbers tend to be rather on the --

DR. XING: Right.

CHAIR STETKAR: -- high end of the observable events.

DR. XING: Yes.

CHAIR STETKAR: And you like the methodology to also work equally well on the low end of --

DR. XING: Exactly.

CHAIR STETKAR: -- unobserved, at least, to date events. And so I think both parts of that verification testing are important.

DR. XING: Yes.

CHAIR STETKAR: You don't have a time line up here probably by design, but you did mention that you are currently trying to integrate this with the full Level 3 PRA and effective -- sorry, I'm not speaking well. But try to finish a large part of this work, if not all, by end of 2013. Is that --

DR. XING: Yes. The initial handout deliverable has to be by September 2012, that's the one we gave the Level 3, Level 2/3 PRA Team some confidence. So, okay, we have --

CHAIR STETKAR: Nine months from now, 10 months from now?

DR. XING: 10 months from now. That's why we would like starting verification and testing before we fully develop the details, because if we have sufficiently, adequately verified the top two levels,

the general methodologies technical basis, the guidance, we have confidence for the -- for that team.

But this is not say a time line, just we are still talking with them at their wish.

CHAIR STETKAR: I've got some. The problem is as you get down, as you all know, into the details, it's the old devil is in the details.

DR. XING: True.

CHAIR STETKAR: And, you know, a general broad framework that sounds pretty well and general guidance about how to use your general framework. And, you know, perhaps one example that may be stylized to a loss of feedwater event doesn't really do much for me in terms of giving me confidence that the Level 3 PRA Team can pick this up and say we are going to apply it for our study, because without the bottom part, it's not clear how it will actually work.

DR. XING: Yes, very true.

CHAIR STETKAR: And that's -- I think you are under a pretty aggressive schedule for a deliverable in September 2012.

MR. PETERS: Yes, and given the level of work that is needed for the Level 3, we have discussed possibilities of using the existing Level 1 analysis that has already been performed and peer reviewed as

a plan -- as a starting point.

So not actually redoing the Level 1 analysis with the essential methodology, but building off the Level 2/3 capabilities using this methodology.

CHAIR STETKAR: That will buy you a little time, but you still have to tie all of the Level 1 work through the Level 2/3 models.

MR. PETERS: That's right.

CHAIR STETKAR: And there almost certainly will be human actions, at least in the Level 2 study, that are -- that need to be integrated with whatever is done in Level 1. And if there is fundamental methodological differences there, that can raise real problems.

MR. PETERS: Yes. We are aware.

CHAIR STETKAR: Okay.

MR. PETERS: We are aware of that.

MEMBER REMPE: Could you clarify, you mentioned you had some data that you are going to be checking from another project? What is the source of that data? Could you say a little bit about what it is that you will be checking against?

DR. XING: Oh, okay. First, the HRA data, the data project. The first part is we stack there a construct format to systematically collecting the

data. And because we had been working on Phase 2 projects in parallel and in, you know, collaborative fashion, so the format of the data collection is very consistent with the framework we are proposing --

MEMBER REMPE: So the data has been --

DR. XING: -- for this project.

MEMBER REMPE: -- operators that have played out or from --

DR. XING: Yes, the data will come from several sources. One major source is from the operator requalification training simulation data.

MEMBER REMPE: Okay. Okay.

DR. XING: And also, we have the -- we work with Holden to put their expert data in this.

MEMBER REMPE: Okay.

DR. XING: And one effort is that James Chang met with some international other countries have HRA benchmarking study to improve HRA quantification, like Czech Republic has started collecting HR data since the last October. And they plan to run 108 scenarios. So there is lots of data point we have got to be done, to have -- put their data here.

So the data may not -- still not sufficient to give a very good probability number, but at least qualitatively, we can verify, okay, it's a

failure mode consistent with the data, so performance data factors are consistent then.

MEMBER REMPE: Okay.

DR. XING: So it gave us initial verification on this.

MEMBER REMPE: Thank you.

DR. XING: Okay. So having said that, so objective for today's meeting is the staff will use an example to present the prototype of the Integrated Decision-tree Human Event Analysis System, IDHEAS. And another objective is what we already have, having your feedback and the recommendations on what to do next.

So for the presentation, the team will first give a brief overview of the method and the statement of part. Then we use the example run through from PRA scenarios to human failure events and from qualitative analysis to quantification.

So next, I would like to introduce Stuart Lewis, representative of EPRI's information-based project.

MR. LEWIS: Good morning. I'm Stuart Lewis. I'm the Program Manager for Risk and Safety Management at EPRI. And HRA happens to be one of the technical areas that I have so far not managed to

share since I've been at EPRI. I think that will change soon, but I just wanted to add a couple of comments to what Jing said and maybe address some of your comments, too.

I think the overall path we have been taking is to try to work out the details on internal events, procedure-based -- the procedure-based context, because that's the -- an area where we think we know the most. And if we can't do that, we are not going to be able to do the other areas, so maybe that's a negative way to look at things.

But I think rather than trying to attack everything at once, it would seem more practicable to do it this way. The expectation of the structure there is to expand to other scope areas.

My own opinion is that we are going to have more of a challenge moving into the non-proceduralized arena than we are to expand to external hazards. I think we have substantial body work, for example, in 1921 that we will be using to help us understand what incidents need to be captured, not only for fires, but what kinds of things we have to think about for seismic events and other areas.

So I think we have got a lot to draw on there. I think that the, for me at least, maybe not--

maybe others have different opinions, but for me, arena of non-proceduralized factions which are still important in terms of the way the world works and could be born in risk assessments is still murkier and we will see how that works out.

But I think that we need to work through a practical approach first that addresses the context we can understand before we expand it.

CHAIR STETKAR: Yes. The only thing, and I don't know whether it is appropriate to talk about it now or a little bit later, as I look at 1921 and I look at this effort, it's difficult for me to see the connection points. In fact, it's difficult for me to see many connection points, if any.

And I guess that bothers me a little bit, because a lot of work has gone in. I think there is a lot of good stuff in 1921. And I don't -- you know, since, I'll point at you, you have been involved in both of the --

MR. LEWIS: I think that --

CHAIR STETKAR: -- I was curious why.

MR. LEWIS: Well, I don't think there has been an intent to ignore 1921. I think that the, in my view, areas that 1921 offers the most for this project are in the way it has fleshed out the

qualitative analysis and, again, in identifying what kinds of influencing factors could be unique to fires that need to be reflected in the model.

In the former case, I think that we do expect that when it comes right down to guidance for performing a qualitative analysis, we will draw on the 1921 work. We really haven't -- I don't think we have really described that in a lot of detail.

CHAIR STETKAR: I want to hear more about that.

MR. LEWIS: Okay.

CHAIR STETKAR: I don't know if you have slides on that or it's better to discuss that, because there is one area --

MR. LEWIS: I don't think we --

CHAIR STETKAR: -- where I saw a real difference, because the qualitative discussion, at least in this report, is rather short, but it emphasizes very strongly these Crew Response Trees as essentially the basis for the qualitative analysis, unless I'm misinterpreting it.

MR. LEWIS: Yes.

CHAIR STETKAR: And that's a very different perspective than the guidance in 1921.

MR. LEWIS: Well, I think that -- maybe

I'll be speaking out of turn here. In my view though, the Crew Response Trees are a way to depict the elements of the qualitative analysis. You still have to understand the scenarios in sufficient depth to be able to construct the useful CRT, Crew Response Tree, to flesh out what the type of events are in there.

And so maybe we have given somewhat less attention to describing the assembly of the information and an understanding of the context of the accident to produce the CRT than we should have. But, in my view, that's where we draw on the kind of work that is in 1921.

CHAIR STETKAR: Okay. I would really like to see how those are going to --

MR. LEWIS: Okay. I don't --

CHAIR STETKAR: -- hang together. So I'm trying to look ahead in the slides here. I don't see a lot of discussion with the CRTs.

MR. FORESTER: John?

CHAIR STETKAR: John?

MR. FORESTER: Yes, I was just going to comment that, you know, I think some of the terminology reviews -- you know, the CRT is really a structure that we hang qualitative analysis on. So the elements of qualitative analysis, you can define

those. We are defining those in the decision-trees, since the elements that -- get used for quantification.

Now, our decision-trees, we have identified the crew failure modes that are tied to the psychological cognitive functions and so forth. And we are getting at the PIS that are relevant. But there are certainly a set of influencing factors from the fire context that we are not addressing directly in the current form of the project.

But certainly, we -- there will be an intent when you move in to capturing the issues for the fire domain, those fire specific factors will need to be included as influencing factors in the decision-trees we have.

So there is nothing incompatible about either structure. It's just that we haven't addressed that particular set of factors in our models yet.

CHAIR STETKAR: I think, John, and I'm looking through the presentation here to see if there is a better time to discuss something that has been bothering me, and I don't know whether it is better to wait for the example or --

DR. XING: Yes.

CHAIR STETKAR: -- maybe it's better to

discuss it now.

DR. XING: Yes.

CHAIR STETKAR: *9:20:01 (29 seconds audio lost). I would rather see the procedures evaluated in the context of the event scenario. Now, if that seems too subtle, what I'm saying is the procedures are only a crutch. They might be a good crutch, but they are only a crutch. How well they are used, depends on scenario-specific events, training, all of that kind of stuff, all the performance influencing factors.

If you tell -- now, if you provide guidance that tells a practitioner, not you, not me, not anybody in this room, a practitioner, the procedures are always complete, the procedures are always perfect, you model the scenario in the context of procedures, I think you are going to miss things, especially as you evolve out of the full-power internal events things that the procedures were, in theory, written to handle very well.

And that's what bothers me a little bit about, as I read through the guidance as it is, with kind of this emphasis on Crew Response Trees, which are procedure-oriented, and thinking ahead about how the overall methodology would need to be adapted.

In other words, where you have a Crew

Response Tree for, you know, a fire in a cable spreading and you have a Crew Response Tree for a, you know, .75G earthquake. And if not, if not, we need to think pretty carefully about sort of the framework of this methodology.

I know we have a champion in the Crew Response Trees. I'll -- go ahead.

MR. PARRY: I don't think necessarily that you have to have a Crew Response Tree that has been similarly related. It's more the representation of the thing -- the tests that you -- that need to be done. If they happen to be received directly, then the modes on the CRT, with respect, will represent procedural steps.

However, if it's a non-proceduralized action, the crew still has to do something. And so the modes there would represent the decisions they have to make and the actions they have to make, but that would be necessary for success.

I don't think it's correct to say that we are interpreting everything that we see and we are actually looking at the procedure as an illustration of the tests that they have to do and interpreting that in the context of the PRA scenario. And that's what we are trying to show you in the --

CHAIR STETKAR: Okay. Maybe the example might flesh it out. That's fine. I thought it would be good to get kind of a discussion up front a little bit, because the example may help.

MR. PARRY: Yes. Did I say that will add things up?

CHAIR STETKAR: Yes. I certainly endorse the broader notion that you said, but there should be some sort of systematic analysis of tasks that must be accomplished.

MR. PARRY: Right.

CHAIR STETKAR: But in many cases, those tasks are not aligned very well with procedures at all.

MR. PARRY: Okay.

CHAIR STETKAR: And at least -- I'm also looking for -- trying to be sensitive to the schedule. If you are looking at getting something on the street, you know, 10 or 9.5 months, 10.5 months whatever it is that has a framework and an example and if that example is very heavily procedure-oriented, it may be very difficult to retrench from that example in terms of trying to sort of broaden the scope.

MR. PARRY: But the example is a good test bed of the overall methodology, is one of the ways we

are looking at it.

DR. XING: Yes. Thank you, John, so for your comments. And, yes, that is one area where, as a project manager, we identify the areas that we need for further development, which means the guidance for CRT right now is focused on procedural activity.

So immediate next activity we need to give a more general guidance. After all, CRT is just one way to -- one way of formalizing test analysis, which is needed in any HRA activity. So we would like expand the guideline in that direction to cover broad scope and beyond. But the experience that we learn from this example will be valuable when we do the expansion.

CHAIR STETKAR: Okay.

DR. XING: Okay. So Vinh? Next, we like to have Vinh to --

CHAIR STETKAR: That's all Stuart was going to say?

MR. LEWIS: Well, if I could just very quickly say something about the schedule.

CHAIR STETKAR: Since I interrupted.

MR. LEWIS: Oh, that's okay.

CHAIR STETKAR: Okay.

MR. LEWIS: The -- my own view of the

schedule is that it is challenging to get something useful within the next year or so or less. But I would point out that although the SRM has been around for five years or so, I really believe that it has made -- this project has gotten a lot of traction in the last year or so.

There are -- a lot of the foundational work went on in previous years, but it has really only been in some period that I'm sure I can define, that it started moving to a more practical approach to attacking the problem, so that gives me some confidence that it's not necessarily going to be another 15 years before we're going to be able to do that.

CHAIR STETKAR: I think, you know, my sense is the same as yours. I think the project is on a fairly steep part of the learning curve here and probably reasonably high, but September is going to be here really, really fast.

MR. LEWIS: Yes.

MR. PETERS: Yes, and we don't have to have a fully developed methodology by September, but we have to have something we can work off of to build that Level 2/3.

CHAIR STETKAR: You at least need to have

something that you have general confidence in that --

MR. PETERS: Yes.

CHAIR STETKAR: -- you know, when faced with the next issue, you aren't going to, let's say, throw up your hands and say gee, we really haven't thought about that. So, yes, certainly by --

DR. XING: So lastly, I just mention one example for your confidence. Just look at the literature review activity. We have five elements to reveal. The team struggled with what we should reveal. How -- what format we should put together. So it look like it took us six more months to do the first element.

Then over the last six months, we have done all the elements and put them in a very good structure. I hope this gives you some confidence. Thank you. Vinh?

MEMBER REMPE: Thanks, Jing.

DR. XING: Okay.

MR. DANG: Good morning. I'm Vinh Dang from the Paul Scherrer Institute. I work in HR mainly and out of the areas of HRA. We do work research and regulatory support tests for the switch regulator and our working as -- on target as well.

The first few things -- slides that I

have, I have four slides that are doing -- that are basically a map of the method. You may hear a lot of different parts of the method and in the context of a rather long example, so we thought that we would give an overview of these pieces first before getting into that.

And then I will give you an overview of the example, because actually the example is the rest of the meeting this morning. And then, actually, Stuart will take over after that. We will trade-off in the qualitative analysis part as we get there.

So just as a reminder, the method that we are developing is aimed at producing traceable, reproducible HRA results. And it's important to note that it is starting from identified human events, in this case, in their PRA context.

HRA results, there are two types that we are concerned here. The qualitative results, the identification of the key factors and the challenges for performance, the kinds of issues that you raised in context of Robinson, for example. And then the actual numbers, the human failure probabilities, human error probabilities.

The modeling and the method is informed by the state-of-knowledge and human performance and in

cognitive psychology. So we try to use terminology and, of course, the theoretical and literature background to make sure that it has that flavor.

CHAIR STETKAR: Vinh?

MR. DANG: Yes?

CHAIR STETKAR: Before you -- how can I get through this quick? Right now, the context is your second bullet there under the aim says that you are looking at the methodology given the fact that I have a perfectly defined human failure event.

In my experience, most of the variability and most of the uncertainty in HRA is, indeed, defining the human failure events consistently. How does this project address that? That's part of this qualitative analysis that we keep coming back to.

MR. DANG: I think --

CHAIR STETKAR: Which is evaluating scenarios and defining, indeed, which human failure events could arise out of those scenarios.

MR. DANG: -- the next slide actually gives you a partial answer.

CHAIR STETKAR: Okay.

MR. DANG: Here, you know, you start on the left side. These are the -- let's say, some excerpts of the PRA process with the HRA in parts.

So, in essence, accident sequence analysis followed by the HRA, which should produce the -- which should produce your HEPs down here at the lower right.

The shading is intentional, meaning that these tasks are not crisp, meaning you don't finish your accident sequence analysis and hand it over to the HRA guy to do his quantitative -- qualitative and quantitative analysis. It's really a shaded and iterative process and we haven't drawn all the arrows of this process.

But, indeed, qualitative analysis would involve the definition of the HFEs and looking really at the accident scenario and how it develops throughout. I think with the tools that we have, the CRT and the scope, you actually do end up going back quite a bit into the identification of the HFEs. But nevertheless, if we have a basic HFE that is defined in a system-oriented view and a PRA, that's your starting point.

And then, you know, perhaps your qualitative analysis will, as you know, lead to defining different variances of that human failure event for different variance of the PRA scenario.

In the middle are some of the PRA tasks, tasks for the PRA Team to perform. And on the right

are, essentially, the parts of these analysis tasks. And that big hole in the middle is where the different parts of our method are supposed to fill in.

So given that, you have HFEs and the PRA context defined at some level of detail, the next step is procedural and other task analysis. And there we have the Crew Response Trees and they are intended to be a graphical representation on what you hang your qualitative analysis results.

The second main element is the Crew Failure Modes and as you go from qualitative analysis to quantitative analysis, you take the information that you have concerning the context of the HFE, the task requirements and the other factors and you decide the ways in which failure will occur and you match the Crew Failure Modes to that.

And then finally, the bottom tasks in the middle column is the application of the decision-trees to actually do the quantification. That's your actual qualitative/quantitative interface where you use your Crew Failure Modes and make the evaluation and get your numbers.

So I have mentioned the Crew Response Tree, Crew Failure Modes and the decision-trees and, of course, for all of this you have a forced-, I

guess, deliverable that is part of the method which would be you use the guidance for these tasks.

How do you use the CRT in a qualitative analysis process? What do you need to consider as you go there?

I think I have said most of this, but the Crew Response Tree is intended to represent the scenario from the operating crew's perspective. It identifies the key actions, the status assessments and procedural transfers, if applicable.

And it is -- you know, you see it in our figure, in our documentation and -- because it's graphical, but really it is the characterization and the documentation of the context and the performance conditions that you put on this. You know, you tie to the nose of the tree that are the information that you need. Gareth?

MR. PARRY: I would just like to add another thing about the CRTs. They are also -- you know Vinh has described it as being the thing you hang your qualitative analysis on. But it's also the link to the quantification.

MR. DANG: Yes.

MR. PARRY: It's, if you like the skeleton on which you do that, the quantification. So it's --

MR. DANG: Yes.

CHAIR STETKAR: That I didn't get. I really want to understand how that works.

MR. DANG: Yes, and that --

CHAIR STETKAR: I'm just being dense.

MR. DANG: -- will come out in the example.

MR. PARRY: Okay.

CHAIR STETKAR: So I would like to see that.

MR. DANG: Yes.

CHAIR STETKAR: An example. I still struggle with how I would develop a CRT for the Robinson event. Okay. That is a scenario that the operators -- a CRT for the Robinson.

MEMBER CORRADINI: Oh, for the Robinson.

CHAIR STETKAR: I could develop a CRT for the over-cooling part of that event. I understand how to do that. I could develop a CRT for the loss of reactor coolant pump seal cooling, part of that event. I could develop a CRT for the loss of part of the electric power system, part of that event. Those are three separate CRTs.

But I'm trying to evaluate how the operators performed in that event and why they missed

certain things and why they focused on other things.

MR. DANG: Yes, that's --

CHAIR STETKAR: And that's where I'm struggling about this notion that --

MEMBER CORRADINI: Can I answer the question, since I'm the -- but isn't -- in that event, weren't there almost initiators in the middle of the event that diverted -- it's almost like you had a kickoff initiator, time passes, the folks involved do this and that, then something else in the middle. Now, they are diverted. So it's not you have just one initiator. We have a series of initiators that are dynamic. Isn't that what happened there?

CHAIR STETKAR: No, not quite.

MEMBER CORRADINI: No?

MR. PARRY: I think, John, that part of the -- one of the questions you are asking really is how do we handle the dependencies between different HFEs in a scenario, which is something we haven't really developed yet.

CHAIR STETKAR: That's one way of looking at it.

MR. PARRY: That's one way of looking at it.

CHAIR STETKAR: Right, that's one way of

looking at it.

MR. PARRY: And that would be the way of looking at it with the concept that we have right now.

CHAIR STETKAR: Right.

MR. PARRY: And that is something that we know that we need to do, especially carrying the causality between the --

CHAIR STETKAR: What I'm worried about, Gareth, though is that I see how the CRT framework works very well for traditional single well-defined initiating event that puts the path on a fairly well-defined trajectory.

MR. PARRY: Yes.

CHAIR STETKAR: You know, typical full-power Level 1, you know, PRA internal events. It's not clear to me how that framework works for other, you know, internal hazards, external events type of things or complex even internal events.

For example, drop -- you know, just recently, I forget the plant name, they dropped a DC bus, which dropped two instrument buses which gave them a lot of strange indications in the control room. I haven't see the whole event report on that.

MR. PARRY: Yes.

CHAIR STETKAR: But there is, you know, a

non-fire, but still an electrical fault type condition.

MR. PARRY: Yes. I think though --

CHAIR STETKAR: That doesn't put the plant necessarily on a well-defined initiating event-specific trajectory that there are a lot of things happening. And the problem is that -- those are the areas as we move forward, quite honestly, from new plant designs doing PRAs and HRAs. Those are probably the types of areas that will be a lot more interesting.

And even for some of the existing plants that have done a lot of backfits and upgrades to address many of the internal event-specific type sources of risk. So anyway, in the interest of time, let's go on. But I keep struggling with that notion.

MR. PARRY: Okay. Well, bring it up again after we have talked.

CHAIR STETKAR: I really want to see how the example works through it.

MR. PARRY: Okay.

MR. DANG: So, yes, the second element of these Crew Failure Modes, we need to identify which ones apply to the modes. We will have figures in the proper context to illustrate what I'm saying here.

And then you -- there is a step where you construct your, this is what Gareth was mentioning, skeleton for the quantification of reduced CRT, that we're definitely showing in the example. And then once you have this reduced CRT where you have identified the applicable Crew Failure Modes, then you use decision-trees to evaluate your performance influencing factors for these CFMs and determine the probabilities and merge that together into your overall human error probability.

Okay. So I'm going to move into the example now beginning right at Item 4. And the purpose is to show you how these different elements are applied. And the example that we are talking about is feed-and-bleed in a pressurized water reactor of B&W-type. You are going to get a lot more details from Stuart about this particular HFE scenario.

The example itself, you know, we are, basically, running through this flow chart starting with PRA scenario and HFE. Then telling you how the qualitative analysis with the CRT. And Gareth takes over and does the identification of CFMs relevant to the HFE. And then after the break, we have the parts about the CFMs, the influencing factors and the basis in the literature followed by the quantification and

evaluation of the human error probability, Agenda Item 6.

So let me just backup now and focus on the qualitative analysis part. And I have put on this slide in big letters the part that I'm talking about, which is the use of the CRTs in this task analysis, procedure analysis.

And this part of the method, if you want, its objective is to identify the main features of the task and the context that are going to influence success or failure. These main features are you inputs to quantification.

So in the qualitative analysis, we have several targets and several issues that we are trying to resolve. One is that we have seen in the past that the depth of the analysis that is carried -- that is performed by different PRA or HRA analysts will vary a lot in terms of how deeply they look at the scenario and the demands and the requirements of the tasks.

Similarly, the comprehensiveness of the issues that they look for, the types of challenges that they try to identify for a particular HFE. And that's where the CRT representations and the focus of analysis is supposed to help standardize if you want this process to make it more systematic and

recognizable for different analysts and reviewers.

For the comprehensiveness, that's in the guidance for the CRT development in the qualitative analysis.

Then in the bottom a little bit further, because now we are almost leaving the qualitative part and moving to the quantitative part, one of the areas of improvement is that we have seen that even when analysts identify the correct issues, they may model them differently, because the methods leave them different scopes of different ways of modeling those issues. And that's one -- going to be one of the sources of the variabilities.

So there, the representation of the identified issues and the effects and failures, that's where we use the reduced CRT as a large flexible model for quantification. And then, again, in this qualitative/quantitative interface, once you have identified a procedural issue, you say well, this step is kind of ambiguous because you need to apply judgment to decide whether or not this train is unavailable.

Then we are trying to increase the consistency of how you translate that into your quantification input. So if your quantification input

has a scale that's somewhat difficult, very difficult, we get inconsistencies once people say this is ambiguous because one person will say that makes it somewhat difficult. Another person will say that one makes it very difficult. And then, of course, you get a different number coming out of your quantification model.

So those are the targets that we are trying to improve in this qualitative analysis.

MEMBER REMPE: I have a question.

MR. DANG: Yes?

MEMBER REMPE: I know in some of the documents that you sent us they talked about the response of people might vary because of differences in countries. So like you are using data from other places and you mentioned that different people model things differently.

Are you seeing country-to-country variability in the approach for modeling also along with the actual response of people?

MR. DANG: I think -- well, you are asking about the variability of HRA modeling.

MEMBER REMPE: Yes. Is it something that is like depending on the country, because they are familiar with how the operators respond, so they might

take a different response approach for developing the model for something?

MR. DANG: No.

CHAIR STETKAR: No.

MEMBER REMPE: No? So the modeling is really --

MR. DANG: It's really very method-dependent and --

MEMBER REMPE: It's just --

MR. DANG: -- then within the method, the methods leave a lot of scope for applying -- there are building blocks, but you can use them very differently.

MEMBER REMPE: Okay.

CHAIR STETKAR: Yes, I'm a Martian using THERP and could come up with the same answers as an American using THERP or I could come up with different answers. It doesn't make any difference whether it is a Martian or an American.

MEMBER REMPE: Okay.

MR. DANG: Right. And two Americans using THERP --

CHAIR STETKAR: Two Americans using THERP and two Martians using their method --

MEMBER REMPE: Okay.

CHAIR STETKAR: -- would come up with different answers also.

MEMBER REMPE: Okay.

MR. DANG: Okay. I think -- do you want me to identify?

MR. LEWIS: If you don't mind doing, just shuffle. I'm just going to introduce the particular human failure event a little further and describe how we put together the information that was needed to construct the Crew Response Tree.

And so we are going to stick with the same example all the way through, which, unfortunately, is probably the example that pleases you the least, but because it is a pretty well-defined scenario.

CHAIR STETKAR: But if you can't do this one, you can't do it.

MR. LEWIS: Right. That's right.

CHAIR STETKAR: I like it.

MR. LEWIS: Although --

CHAIR STETKAR: I'm a glass half-empty kind of guy.

MR. LEWIS: Well, that's what being a PRA analyst is all about.

MEMBER CORRADINI: No comment.

CHAIR STETKAR: Two-thirds, maybe two-

thirds.

MR. LEWIS: So just in parallel with the way Vinh laid out his diagram for how the HRA unfolds from the PRA models. There is a picture of the event-tree, the core damage event tree in this case for this particular B&W plant. And it's not necessary that you read it particularly.

The paths are marked -- the path that is marked in red there is describing words on the left side of the slide. It's a loss of feedwater coincident or causing a reactor trip with a total loss of heat removal via the steam generators and a failure of feed cooling to prevent core damage.

And so these event trees for this particular plant and this PRA were developed sort of at the level of safety functions as opposed to being broken down into more specific systems. There are lots of different ways to develop event-trees. This is one of the ways that has been used in the industry.

More specifically, this particular event was initiated by a loss of main feedwater and makes a bit of difference because if the loss of feedwater occurred after the reactor trip, then you would have-- you would already have a head start removing some of the decayed heat up front and extends the time

somewhat.

Losing main feedwater before the reactor trips is a more demanding, typically, shorter term scenario by a margin at least and for B&W plants.

CHAIR STETKAR: Especially at a B&W plant.

MR. LEWIS: That can be, you know, a significant amount of time.

In this case, there is an emergency feedwater system that ought to start and feed the generators automatically, but that system fails. There is also a manually-initiated backup feedwater pump that could be used by the operators to supply the steam generators, but that pump is not available in this particular scenario either.

MEMBER CORRADINI: That's all encompassed under MB?

MR. LEWIS: That's all in the top of MB and the core damage of event tree failure of heat removal.

MEMBER CORRADINI: All right. Thank you.

MR. LEWIS: And so finally, the operators still had the opportunity to prevent core damage by initiating feed-and-bleed cooling. So the scenario we are looking at is that they failed to do so, not so much that the system itself is unavailable, but that's

the operator or the human failure event that we are looking at, the failure to initiate feed-and-bleed cooling for this specific context.

And in terms of defining the HFE, this really reflects that information setting the stage for how we analyze the event. In this particular case, because of the initial failures, again, you could even subdivide these failures somewhat, but depending on exactly how main feedwater fails, you would dryout the steam generators within one to three minutes or so. It's a fairly quick event in the B&W plant.

From the time when they lost main feedwater, the operators would have, approximately, 20 minutes to initiate feed-and-bleed cooling to avoid core damage, according to the success criteria calculations for this plant.

MEMBER CORRADINI: So just so I understand the timing, the timing is on the low side by design?

MR. LEWIS: It is.

MEMBER CORRADINI: In terms of dryout and time to initiate feed-and-bleed?

MR. LEWIS: In fact, design terms of the scenario --

MEMBER CORRADINI: Yes.

MR. LEWIS: -- were selected for analysis.

That's right.

MEMBER CORRADINI: Okay.

MR. LEWIS: If the -- if things happen in a somewhat different order, you might have 30 minutes instead of 20 minutes to initiate feed-and-bleed cooling. Right now, that's not very critical to what we are doing.

MEMBER CORRADINI: Okay.

CHAIR STETKAR: Dryup down to seven instead of three.

MR. LEWIS: It could be. We have tried to --

CHAIR STETKAR: That's fine. I just wanted to make sure.

MR. LEWIS: -- maximize the challenge here. I did try to identify some of the symptoms that the operators would be looking at in terms of getting to the point where they might make this decision. Of course, you would expect that they would have pretty clear evidence in this scenario that they were losing inventory in the steam generators, that's a reasonably dramatic response for the generators.

As you lose the removal of heat through the generators, the reactor cooling system pressure and temperature all start to increase fairly rapidly.

You would also expect that there might well be alarms indicating to the operators that there was something wrong with the emergency feedwater system in this plant depending on the pump scale.

We haven't really specified that aspect, you know, at that level of detail, but presumably there would be some additional information to the operators, which would -- might cause them to be distracted and address those symptoms or might be important pieces of information for them to respond to.

In this particular plant, at least, I'm not sure this is all B&W plants, but this particular plant has an operator aid that tells the operators if hot-leg temperature in either of the hot-leg reactor cooling system reaches 600 degrees fahrenheit, they are supposed to immediately start feed-and-bleed cooling. So that's to preempt discussions about whether or not they are going to have the opportunity to restore feedwater before they need to start feed-and-bleed cooling and the intent is that if they get to that point, they need to start feed-and-bleed cooling and then deal with feedwater and other things after that.

So in this case, when we start looking at

the procedure, this is -- although B&W plants, Westinghouse plants and CE plants all three PWRs have similar concepts and procedures, they all took different approaches to developing their emergency operating procedures.

All of them have a combination of the ability to track important safety functions and the status of those safety functions, but also you look at responding to specific failures, so that if they get into a situation where they have lost electric power on a poor KV bus, they know what to do to respond to that event.

But at the same time, they are tracking what is going on with heat removal from the reactor cooling system with pressure and temperature and all those kinds of things. So the procedural approaches are somewhat different, but they all try to accomplish the same objectives.

But when we really dug into the procedural paths for this scenario, despite the fact that it is one of the more straightforward scenarios you might identify, you find that the procedure falls back on itself multiple times and in multiple ways as a variety of ways and it might get to the point where you would start feed-and-bleed cooling.

And when we tried to construct the CRT, we found that it wasn't -- while we could depict the procedure in the CRT, it wasn't necessarily a straightforward process. And we found it helpful to insert this step, which involves developing an event sequence diagram, which is focused more on how the event unfolds with the ability to look at what happens if something does or does not happen along the way.

So we took this intermediate step before we developed the CRT for this action. The other thing that was important to us in developing this ESD is, as I mentioned, that backup feedwater pump that was nominally unavailable for our scenario, if it had not been unavailable, then we would have had the potential to consider a human failure event that represented failure to start that backup feedwater pump as well.

John?

CHAIR STETKAR: Part of this is the PRA model knows that the backup feedwater pump is unavailable. The operators don't.

MR. LEWIS: That's right. And the ESD actually allows this, if we wanted to, to consider what happens if -- you know, when they are looking at trying to start the backup feedwater pump and how that might affect the time that is left them for the other

actions.

So by putting -- when we developed this event sequence diagram, we actually included both of those actions as though the backup feedwater pump were not available initially. We ended up focusing only on the failure to initiate feed-and-bleed cooling through the CRT. But, in fact, we couldn't and if I were going to look at both of those actions, I would develop one CRT that included both human failure events.

CHAIR STETKAR: That's my whole point.

MR. LEWIS: Yes.

CHAIR STETKAR: Is that part of the evaluation of this scenario somehow should address the fact that the team knows that they can get -- it's especially important because of the short time cost this year. The team knows that any minute now they can get the backup feedwater pump running. Any minute now, just any minute now.

And, in fact, maybe they develop their primary strategy to get the backup feedwater pump running, because they don't like making a mess in the containment, because nobody has ever made a mess in the containment before and they don't want to be the first ones to make a mess in the containment under

conditions when they shouldn't have, because any minute they could have gotten that backup feedwater pump running.

So it's not clear to me how the -- I understand how the structure captures the bleed-and-feed. It's not clear to me how the structure captures that conflicting priority, if you will, or perhaps the misplaced priority. Maybe the exact --

MR. PARRY: Well, that comes later. Actually, that comes in to the development of the decision-trees for the CFMs.

CHAIR STETKAR: Okay. Okay. I hope we will see that.

MR. PARRY: You will.

MR. LEWIS: It's important in the ESD, but unfortunately the version of the report that we got didn't have those pages in the ESD, pages 5, 6 and 7 are --

CHAIR STETKAR: Those are repeated.

MR. LEWIS: The ESD wasn't a primary focus of our presentation --

CHAIR STETKAR: Yes.

MR. LEWIS: -- trying to extract --

CHAIR STETKAR: Okay.

MR. LEWIS: -- some pieces. We could

certainly provide the whole thing, if you think that would be --

CHAIR STETKAR: Well, no, even the one in the report wasn't --

MR. LEWIS: Oh, it wasn't all in the report?

MR. PARRY: There was four pages that were the same.

CHAIR STETKAR: The last four pages are identical.

MR. LEWIS: Oh.

MR. PARRY: They are identical, yes.

MR. LEWIS: I was looking -- there was an action I think sort of -- I couldn't look at it.

CHAIR STETKAR: Okay.

DR. XING: Okay. Last thing I would like to comment here is the report was developed in the more physical distributed fashion.

CHAIR STETKAR: I under --

DR. XING: And you will see more integration in the presentation.

CHAIR STETKAR: I understand. And we have our constraints that we need to get things 30 days in advance.

DR. XING: Yes.

CHAIR STETKAR: You know, I really appreciate that you did that. I just --

MR. LEWIS: I hadn't realized the version was like that. I didn't know that.

CHAIR STETKAR: I'm sure you didn't. You know, some people actually read this stuff.

MR. LEWIS: Yes, we knew you would jump.

DR. XING: Yes.

MR. LEWIS: We can go on to the next slide. One thing that distinguishes this -- and I don't know how familiar some of you might be with event sequence diagrams. I know John and Dennis are. Maybe some of the rest of you have seen those in other contexts.

This one is a little bit different. You know, I don't know that there is really a standard convention to the ESDs anyway. But this one, in particular, really focuses on human actions after it sets the stage for the scenario. It really doesn't focus on system level successes and failures as much as it does the role of the operators.

So the first part here is just to show you what we have got here. It identifies the initiating loss of main feedwater and a few of the early actions very much like any other event sequence diagram might

do, but we have contained it in this case to fit the scenarios.

For example, we are not developing the failure of the reactor to have tripped after the loss of feedwater. If we were worried about actions in response for failure to trip, we certainly would have done that, but that's not part of this context.

And just to show you some of the conventions. The rectangular boxes are used to represent system actions. So you will see off to the right an arrow that indicates when that action doesn't occur and following down if it does occur. And also to the left, I'm trying to identify the input signals, if there are automatic signals, or the parameters that are being tracked as we go.

And then there are some nodes on here to help people understand what the ESD is depicting. So this is just the very first part of the ESD. And we have got a couple more pieces here to show you what it is we did as we developed these.

The yellow was used for transfers from -- to -- because you can't draw the whole thing on one big piece of paper very practically. So this comes out of a part of the event sequence diagram in which the operators have successfully made the decision to

step the procedures and ask the operators to address steam generator control.

In fact, backup for just a second. The way this -- no, you don't have to backup there. I meant my explanation. The way this particular procedure is laid out, after a fairly short set of immediate actions, the operators are called on to take the next set of actions the operators have are to look at what they call specific rules, which are the way they track the status of safety functions.

So these specific rules are things that are always in effect for a response to a scenario or a specific rule can be invoked at any time and it's not a step-by-step kind of consideration or procedure.

And after that, the operators have a set of safety functions that they need to address in a more step-by-step fashion. They look at lack of heat removal and a variety of other things as they progress. But the specific rules are still kind of off to the side as something that should trigger their thinking if they notice something that is not quite right.

So this first part of the ESD that I've got on here addresses the point at which they have decided, within the context of one of the specific

rules, they might have a problem with steam generator control.

And again, we presume that that's a fairly obvious condition to the operators that there is something going on with the steam generators. They are not responding in the usual way and so they -- you would expect that they would invoke, in this case, Specific Rule No. 4 and go to Step 4.1 in that part of the procedure.

The first part of the procedure in this blue kind of upside down triangle, it's not upside down, it's a trapezoid as we call it, but it's trapezoidal known here and it's blue, is the first case where we have something that is considered with respect to have a possible failure point that we might incorporate into the Crew Response Tree.

So the -- all the trapezoids are representing actions on the part of the operators. The ones that are colored blue are cases where we considered decision points that need to be captured or at least discussed in the CRT.

The other ones that are not filled in, we consider not to be directly relevant to the scenario we are looking at. So, for example, if you go to this part of the procedure, the procedure tells the

operators to start a second makeup pump injecting makeup water into the reactor cooling system. We have looked at that and we've concluded that it didn't have really a fundamental impact on whether or not they succeeded in feed-and-bleed.

MEMBER BLEY: Stu, can I interrupt you here?

MR. LEWIS: Sure.

MEMBER BLEY: I really like the way you done these trees. I like that in the report. And the color coding and things helps. And the one thing though, this one, in particular, strikes me that we are kind of mixing the hardware back in. Although from the hardware point of view, starting the second makeup pump will not substantially order plant response, since we have -- we are also in this trapezoid. We are talking about people.

And if the procedures are trying to get them to start both pumps and they can't get the second one started, that's one of those things that could add a little bit to their -- either their work load or some confusion or divert them from going the way you think you want them to.

So I'm a little surprised that we just slipped back to the hardware, at that point.

MR. LEWIS: Yes, Dennis, we did make some shortcuts in the tree here to illustrate the process. In fact, I believe, the -- if you look at the procedure, in this case, if they can't start the second makeup pump, they are directed to go immediately to feed-and-bleed cooling. So that would actually be a possible success path of feed-and-bleed cooling if they try to start a makeup pump. They would be told to open the PRV and make sure they maximize the flow they had into the reactor cooling system.

We could have put that in more explicitly, but we did make -- we did take shortcuts here and in other areas.

CHAIR STETKAR: Well, but in Dennis' sense, if I know any second now I can get that second makeup pump going, any second now I can get it going, that certainly would seem as a potential source of delay, despite the fact that it says if I can't get it -- you know, once I finally make the decision that I can never get this thing working, then, indeed, I'm directed to bleed-and-feed, which is, you know, a success, in our sense.

MR. LEWIS: Well, I think, in general, I agree with your point. In this particular case, I'm

not sure that that would be much of an impediment to getting there, because the next step in the procedure tells us to check to see if they need feed-and-bleed cooling. So they are kind of forced to go there whether they have that second makeup pump or not. But there are --

CHAIR STETKAR: The question is how long?

MR. LEWIS: How much --

CHAIR STETKAR: How much of our lives do we spend --

MR. LEWIS: Yes, well --

CHAIR STETKAR: -- until they decide to take the next step for either reason?

MR. LEWIS: And that kind of information we do try to capture in the decision-trees, whether they delay implementing the steps, because they are trying to do something else.

MEMBER CORRADINI: So can I ask a question? You guys are all experts at this, so I'm just listening. But I'm back at three minutes and 20 minutes. And that to me then makes some difference here.

If it's really not 20 minutes and 20 minutes is -- or I can't remember what you called it, but let's say it's a decision -- it's a boundary point

and it's not 20 minutes, it's an hour, then it could potentially change the success of all of this.

MR. LEWIS: sure.

MEMBER CORRADINI: So is that done here just to stylize the analysis method, but later you will come back and say how do things change if I actually have a more realistic time? Because it seems to me the personality of the crew, you can have an abstinent, with all due respect to an operator, operator who is going to sit there and just keep on retrying to do this. But another one will, essentially, say okay, that's a failure. Now, what does my procedure tell me next and he makes it within 20 minutes. Somebody else is going to be damned if he can't get over this one hump, based on this would fail.

So I'm trying to understand the dynamic of this relative to John's question.

MR. LEWIS: Yes.

MEMBER CORRADINI: Is this just a way to stylize how you use your techniques and you will come back and look at variations in some of these, whatever you call them, I don't know what you call these, but the timing?

MR. LEWIS: Yes. I think I would say it's

more than just to stylize the event here. In a practical sense, the approach that most analysts take is to, when they are analyzing a particular human failure event, try to define kind of the most limiting conditions for that event.

MEMBER CORRADINI: Okay.

MR. LEWIS: And to analyze the event in that context.

MEMBER CORRADINI: Okay.

MR. LEWIS: And then if there are other less taxing scenarios, they may or may not specialize the event of those less taxing scenarios, depending on how important it is to the risk profile.

Now, if they really did have an hour instead of 20 minutes, you would have to look at would that change the way they thought about what they were doing? Would they get more involved in pursuing a different path, like John is talking about? Maybe they would spend more time trying to get to the backup feedwater pump.

Is there something else besides time that would be an important consideration there? If not, then we would look at whether or not we needed to analyze this situation with a little bit more expansive time or whether we could apply the human

failure event from this context to other contexts and save our analysts efforts for other human failure events.

CHAIR STETKAR: But if I heard Gareth, Gareth -- we will get through the example eventually here. You did say that the analysis somehow accounts for delay factors?

MR. PARRY: Yes, because one of our Crew Failure Modes is delay initiation of the response.

CHAIR STETKAR: Is that --

MR. PARRY: And that's actually the tree that we are going to --

CHAIR STETKAR: Okay. Let's --

MR. PARRY: -- discuss actually.

CHAIR STETKAR: We are a little bit limited on time, because we certainly do want to hear from April and company about the PIS and finish the status of their work.

So we can run a little bit long, I think. We don't have any compelling reason to finish at 12:30, but we need to be a little cognizant of time. So let's see if we can work through.

MR. LEWIS: Well, one thing I would like to make sure everybody is aware of is that the operators don't think in terms of I have 20 minutes or

I have 60 minutes to initiate cooling. They are following the procedures and presumably they are trying to do what the procedures tell them to do.

They don't know well, I lost feedwater before the reactor tripped, so I'm going to drive my generators faster and heat up faster as opposed to other things that might happen there. They are going to look at what their conditions are and try to respond to those conditions, whether it happens over 30 minutes or 60 minutes.

MR. LEWIS: Well, but in particular, and I hope the example illustrates this, in this case, they will try to follow the procedures. For some reason, really smart people wrote that step in the procedure that says you really ought to try to get a second makeup pump running.

And when I'm in the heat of battle, I have to rely on the guidance of those really smart people. And if I really ought to try to get a makeup pump running, I'm really going to try to get a makeup pump running. I'm going to not just push the button, I'm probably going to send people out to check the circuit breaker and see if there is an electrical problem and probably send somebody out to look at the pump and, you know, report back to me, because I would really

like to get this makeup pump running, because really smart people told me I really ought to do that.

And if I only have a 20 minute time window, that's important. If I've got 30 hours, you know, at some point I have to say the people looked at everything we could look at. They took the 10 or 15 minutes to do that. We're fine to move along with the procedures.

CHAIR STETKAR: And there are steps and procedures that would cause the operators to stop and wait until they got that information back. I don't believe this particular step is of that nature. So you are right, that could be something where they are guaranteed to fail, but they are not -- they don't know that until they try it.

MR. PARRY: But --

MR. LEWIS: I don't think in this particular scenario that is the case. But it is an important point to keep in mind.

So the last step on here and whether or not they can start the second makeup pump, and that was my point here, the next step in the procedure says do you need to start feed-and-bleed cooling? And it has -- it identifies what conditions you have to have, including if you have fewer than two makeup pumps

running, that's a condition for starting feed-and-bleed cooling, at this point.

If you have high temperature in the RCS or if the combination -- essentially, if you have lost the cooling margin, because of pressure and temperature in the RCS are above a certain point, any of those conditions lead them to start feed-and-bleed cooling, at this point.

I think I've got one more page just to show you the -- I put a circle around those two points, because those are both cases in which we would include the events in the Crew Response Tree. The difference is that the kind of stretched hexagon at the bottom represents a failure execution. It's yellow because there is another transfer going to another part of the event sequence diagram and lays out the steps that the operators have to take to execute this action to carry out, actually in this case, starting the backup feedwater pump in the upper -- in the middle, kind of the middle of the page, the failures that would lead to not successfully initiating feed-and-bleed cooling after the operators chose to do so.

So either the blue box or the yellow hexagons would be cases we would consider for type of

events in the Crew Response Tree. And you see the end state is depicted there too. Either -- ultimately, the kind of peachy color there is the one where they found the HFE has -- the action has failed. So you have an HFE. The green ones are successful outcomes in the context of what we are looking at here.

I think that's all I have to say about that, so if you have any questions about how we did this part or why?

MEMBER BLEY: This is Dennis. I'm a little -- if I had the procedures, I'm sure this would be clear, but when you come out of your blue box and don't, do not, recognize the loss of feedwater, you come to Attachment 4/2-27 implement feed-and-bleed cooling. The title there has got me confused. You must be doing something that, in the process of that attachment, tries to get you back to feed-and-bleed cooling. Is that right?

MR. LEWIS: Yes. The procedure, at that point, tells you to start feed-and-bleed cooling, whether or not you have successfully started the backup feed pump. There is a step that says start the backup feed pump, but even if you do that, you are told to start feed-and-bleed cooling.

CHAIR STETKAR: Dennis was looking at the

first horizontal --

MR. LEWIS: Oh, I'm sorry.

CHAIR STETKAR: -- out of the trapezoid.

MEMBER BLEY: Yes.

MR. LEWIS: Oh.

CHAIR STETKAR: Where it says they have not recognized total loss of feedwater.

MR. LEWIS: Oh.

CHAIR STETKAR: How does -- if I don't know I have had a total loss of feedwater, how do I get to some guidance that tells me to initiate feed-and-bleed? I understand --

MR. LEWIS: Yes.

CHAIR STETKAR: -- if I go yes down, no to the whatever direction that is left or right.

MR. LEWIS: I have to look at that again. I believe that -- I'll have to look at why that is there. There are some kind of odd steps in the procedure when you get back to the feed-and-bleed cooling. And I don't remember exactly why that one is, because I think we have already asked in another part of the tree whether they recognize total loss of feedwater.

And then maybe it's something unique when you actually get into this attachment that causes you

to go there, whether you make that recognition or not.

MEMBER BLEY: I don't think the description in the report explained that, either.

MR. LEWIS: Probably not. I'll look at that and clarify that. But I understand your point now. Sorry that I looked at the wrong part there. I think it looks like an error, but I actually think it's probably not.

MEMBER BLEY: Well, that's what I'm expecting that somehow that EP Att 4/2-27 is doing other things and eventually raises the question again, but I don't have that.

MR. LEWIS: Yes.

CHAIR STETKAR: If that's some sort of catchall thing that applies somehow, that would be the case, but --

MR. LEWIS: Yes, right. I can pull it up. I do have the procedure with me on my computer. I can look at it later.

CHAIR STETKAR: Any other questions on the ESD? Is now an appropriate time to take a break or do you want to get through the CRT?

MR. DANG: Either way.

MR. LEWIS: We could do --

DR. XING: Maybe we want to get through

CRT, because of it's two part --

CHAIR STETKAR: Okay.

DR. XING: -- closely matched.

CHAIR STETKAR: Let's see if we can get through the CRT before we take a break then.

DR. XING: Yes.

MR. LEWIS: Okay.

MR. DANG: Well, just like that, I show you the final product, the CRT. Part of this slide is -- I think you have seen a lot of different versions of CRTs that, and there are some subsequent slides where you can actually read some of the details, it's a map of the number of ways in which the HFE can succeed, as well as ways in which it can fail.

And that it is not pages and pages for this particular HFE. It's a relatively compact representation.

So now, I give you just a little detail of the CRT, the very top part, showing you along the top the success path. And I guess the first comment I should make is the white boxes represent sort of informational events in terms of the CRT, meaning that you put that there as a placeholder to remind yourself where you are in this scenario and what has occurred. And you don't actually have a branching possibility on

the white nodes.

The rest of the nodes are operator decisions, like making a transfer, or actions, like true performing particular action. And with reference to the procedural orientation, I think it is important that -- of course, you are seeing a lot of procedures in the CRT that we are showing you, because we are in internal events, but it's not inherent in the procedure. I'm sorry, it's not inherent in the CRT representation that you must be wedded to the procedure steps.

And what you see, for example, is this 12* that's coming off of the 6 off the top row. The 12*, when you fail 6, which is recognizing the need for a feed-and-bleed using the specific rule, you don't have a transfer to some step that is dealt with in 12*.

12* is emerging after the reactor has reached the -- reactor cooling system has reached 600 degrees fahrenheit and that node is kind of in synchronous and it represents the response of the team to that cue coming out.

And you have the other such jumps within the procedure space, you know, based on the specific rules like conditional information page. It's an always applicable step, meaning that you don't decide,

with the exception of right after the immediate actions at this plant, but you don't decide how I do this specific rule or no, I don't do it.

It's something you have to keep in mind and invoke it as needed. We will go a little bit more into that specific rule as we go further into the example.

So --

MEMBER BLEY: Vinh?

MR. DANG: Yes, Dennis?

MEMBER BLEY: I have trouble tracking all of this in the report. I wonder if we were missing part of the documentation or something?

CHAIR STETKAR: No, I don't think so.

MR. DANG: In the report, I think we were at an earlier stage of just showing you the different pieces. And then we developed it a bit further for the presentation to be able to really point out specific points that highlight different points from the report.

MEMBER BLEY: Okay.

MR. DANG: These figures are not in the report.

DR. XING: Yes, Dennis?

MR. DANG: Some of them.

MEMBER BLEY: If you can get us better documentation, if you've got it now, for us to be able to look at this later, you know.

DR. XING: Okay. I'll put that in my plan, Dennis.

MEMBER BLEY: Thank you.

DR. XING: And yes, as I said, the differences for the report is because it was developed by the stakeholder of individual parties. And it's more focused on how MDFP works. And in developing this implementation, the focus was integration. How this part works in the entire method.

So you see some difference that we talk that is not in the report.

MEMBER BLEY: Thanks.

DR. XING: Yes.

CHAIR STETKAR: You know, I get that. I think a bit of the problem is you folks have lived with this for, and probably this example, the better part of some number of months and it may be really transparent to you. It does not hang together in at least the report that we got. A lot of --

DR. XING: Yes.

CHAIR STETKAR: -- it's really difficult to see the flow and understanding the process.

MR. DANG: Okay. Well, I think we say this particular presentation actually as an opportunity to help point those --

CHAIR STETKAR: No, I understand that.

MR. DANG: -- elements together. And on the other hand, of course, this presentation isn't intended, you know, for you to be able to review this example.

CHAIR STETKAR: No, no, no, no.

MR. DANG: But I know that --

CHAIR STETKAR: It's just that --

MR. DANG: -- it would have been nice --

CHAIR STETKAR: -- at least if you thought that the report, at least the version, you know, mid-November or whatever it was version, that we got explained this process quite well. It doesn't. Okay?

MR. DANG: Yes. I think we are aware of that.

DR. XING: Yes, and node not adequate integration in the report.

MR. DANG: Okay. So -- yes?

MR. FORESTER: Excuse me. You are referring to the -- explain the process for building the CRT. It doesn't explain that or it doesn't explain this particular example? I want to make sure

I understand what is missing.

MR. PARRY: From the ESD to the CRT, is that what you are asking?

MR. FORESTER: From the ESD to the CRT. I think that's where I hung up.

MR. PARRY: Okay.

MR. FORESTER: Dennis, is that where you had problems, too?

MEMBER BLEY: Yes. And I mean --

MR. FORESTER: I mean, yes --

MEMBER BLEY: -- I know what the 1, 2, 3, 3, 12 are. You know, after there is a reduced description that gives most of them, but it doesn't talk about the 12* stuff within the write-up. It jumps to Nodes 3 and 4 and 6 and 12, but it doesn't tell you anything about the other one. It's just really hard to follow.

CHAIR STETKAR: I think building the CRT is --

MEMBER BLEY: Yes, building -- the ESD was pretty clear.

CHAIR STETKAR: The --

MEMBER BLEY: Even though there wasn't a whole lot of text to support it, but the transfer from there over to the CRT was tough to follow.

MR. DANG: Right. And we certainly --

MEMBER BLEY: Impossible to follow.

MR. DANG: -- didn't -- yes. We didn't show you the development. You know, such a representation doesn't come in one step, you know.

CHAIR STETKAR: I think it's important though, because if the CRTs -- I'm -- you know, in my personal mind, I'll telegraph the jury is still out in my mind on the usefulness of these CRTs. So because of that, I really want to understand their usefulness and their benefit to the process. And because of that, I really want to understand how they are developed.

MR. DANG: Right. No, I appreciate that.

CHAIR STETKAR: And, indeed, if they are key, if they are a fundamental element of the whole methodology, the users guide, the documentation should make it crystal clear how they are developed. So I'm assuming people, practitioners will be developing these. They are not predeveloped as might be some of the decision-trees. This is my job if I'm an analyst.

MR. DANG: That's right.

MR. PARRY: Right. And I think one of the other things to think about, too, is that the CRT is a tool to get you to the end point. So it's not a

fundamental entity in its own right. Okay. It's a way of documenting the task analysis that needs to be done by the crew in the context of the HFE and then it's a way, a link to get you to the right, what I would call, crew failure scenarios, which is the explanation of how the crew fails.

So, I mean, we think it's helpful because of the way it, obviously, it wouldn't have been their thought if we didn't, but it's really more of a representation, I think, of the task analysis that we need to consider to look for the opportunities for error.

MR. DANG: Okay. Yes, so the qualitative analysis, those results now, the actual part besides the CRT are the features of the scenario context and tasks to drive performance. They are linked to the evolution of the scenario and they refer to the CRT node events in the event sequence diagram, if you have one. And the actual discussion of these features are path-specific.

Now, I just give you a couple of examples from this example. This is just an extract of what we imagine would be the qualitative analysis related to-- the qualitative analysis results related to Node 4, which is addressing going to specific Rule 4 to

address steam generator control.

The context, and this is along the top line of the CRT that we showed earlier, is that you have just finished the immediate actions following trip and that's, you know, verification that while they have gone in and that kind of stuff and then the first step is to go through all your specific rules.

The guidance only instructs the crews to implement any necessary specific rules. So it's, essentially, a reminder. There are no specific criteria for when you would want to use which rule and, etcetera.

The one that we are interested in of these specific rules is specific Rule 4 dealing with steam generator control. And again, now, I'll come back to the context. I know, you know, this is very worrying and that's intentional here. The context here is that you have got one of six different specific rules. They are supposed to be in priority order or rather they are in priority order.

Looking at them, specific Rule 2 related to subcooling margin might need a slight delay. This is the assessment of your -- that you have obtained from talking to your plant people and your trainers. And specific Rule 1 and specific Rule 3 don't appear

to be relevant in this scenario, so we are hoping that the operators will skip over and get to specific Rule 4. They have a good chance of doing so.

CHAIR STETKAR: Probably not if they are really trained to go through them systematically, because these are important things to do. So if I'm an operator and these are really important things that I need to go through, I probably don't skip over them, as much as we in the PRA might hope from this example they would skip over them.

MR. DANG: Right. And I think, you know, in this part of the qualitative analysis, I don't have it. For this one, it's in the dot, dot, dot part. The training, of course, is significant. And you need to find out -- as part of this process, you need to talk to your -- to the plant people and look at their training program and see really how they deal with this.

You can go to the simulator and verify whether they systematically go through Rule 1 and work it off, Rule 2, etcetera, or whether they actually jump to Rule 4. And depending on the results of that information gathering, you're going to put that here in the qualitative analysis and that's going to inform your quantification.

This is fairly typical quality analysis and that's probably why we don't have so much information about how to carry out the qualitative task analysis, but I think it is important to stress that the different --

CHAIR STETKAR: Vinh, I have to take issue with you there. You may say this is fairly typical qualitative analysis, but everything that I have read, and there is a really good introduction to this report that says "The conclusions from the benchmark studies, the empirical studies were that deviations or differences in performing the qualitative analysis was the most important source of deviations in the overall results."

So if this is a fairly standard way of doing it, apparently, most people aren't doing it the fairly standard way, which means it may not be the fairly standard way to do it.

MR. DANG: I agree. I misspoke. Can I change that?

CHAIR STETKAR: You are on the record already, but you can retract the statement.

MR. DANG: I would say --

MEMBER BLEY: You're going to right the record.

MR. DANG: Let me correct what I intended to say, which is this would be fairly -- oh, shoot.

CHAIR STETKAR: What you want to say is the methodology should --

MR. DANG: This would be --

CHAIR STETKAR: -- describe the good practice of the way people --

MR. DANG: Exactly.

CHAIR STETKAR: -- should do a qualitative analysis.

MR. DANG: This is qualitative analysis according to good practice. And you will have people who do it like this and who will get to these issues. You will also have much less. And, of course, we are hoping that with this guidance and with, you know, really specifying the points and the kinds of issues that you need to look at, that we would get a broader number of practitioners to be using that level of analysis. That was one of my targets.

CHAIR STETKAR: Well, I think that's what we need to get --

MR. DANG: Level and depth of analysis.

CHAIR STETKAR: -- to in this qualitative analysis is to provide guidance with supporting examples to show, you know, the practice and how it's

implemented. And this is one example.

MR. DANG: That's right. Okay. Yes, so I think you are getting the feeling for, you know, we have this tree and the different nodes, I don't think I need to go through this one. It's similar.

Again, you know, you are going to go through the context, the guidance, training, task demands, how complicated it is to carry out, etcetera. It's really information gathering with -- that you are going to use later to decide what are the likely ways in which they will fail, which become your Crew Failure Modes. And then what are the probabilities of those?

So, Gareth?

MR. PARRY: Okay.

CHAIR STETKAR: We are going to take a break.

DR. XING: Oh, yes, we can take a break now.

MEMBER CORRADINI: That's a good idea.

CHAIR STETKAR: Because at least some of us need time for a break.

MEMBER CORRADINI: Yes.

CHAIR STETKAR: And it looks like it's an appropriate time. So we will recess until 10:40.

Thank you.

(Whereupon, at 10:26 a.m. a recess until 10:42 a.m.)

CHAIR STETKAR: We are back in session.

MR. PARRY: Okay. So what Vinh showed you was the CRT we developed for that particular HFE. And what I want to talk about now is the next step in the process, which is, basically, to analyze that CRT under the specific HFE boundary conditions.

Some of them are reflected. Okay. Like we noted the PRA scenario definition is reflected in the way the CRT was written, because, you know, we don't have to -- we know we have got no feedwater, for example. We know we have scrammed.

So a lot of that is reflected, but the detailed timing of the events and the analysis of the nodes of the CRT haven't been done yet. And what we are trying to do here is to take that CRD -- CRT, analyze it in preparation for the quantification.

So we are going to reduce that tree into the framework which we will use for the quantification. And later on after we have discussed a few things, I'll describe what the quantification model is. Do we do that before --

MS. WHALEY: We do it after.

MR. PARRY: -- and then you come on after us. Okay. All right.

So what we are going to do is look at the CRT node-by-node. Okay. The first two nodes, you know, we just passed through.

Node 3 is specifically a failure of the operators to check the specific rules per EOP step 4.1. Okay. That's something that they would come to pretty much immediately.

We decided on looking at that since this would be a clear violation of practice, we couldn't really see -- think of a good reason for identifying that as a credible failure.

And there is another thing we might add to that, too, is you could put that in a model, but what good does it do you really? I mean, you put in an event that says they failed to check the specific rules. The only solution to that is to train people not to forget to check what the specific rules are and not to do it.

CHAIR STETKAR: But aren't there examples of real events where people have not done that?

MR. PARRY: I would think in this early stage in the procedure, probably not because it's -- I'm sure these are memorized steps anyway.

So we decided that we would have an assumption here that we are not going to model that. Okay. That's -- we can argue about it, but that's the assumption.

CHAIR STETKAR: Yes. I want to get into the details of the --

MR. PARRY: Right.

CHAIR STETKAR: -- specific examples are less important --

MR. PARRY: Right.

CHAIR STETKAR: -- than the overall process. One of the concerns that I had was by making these assumptions, you made this, you, Gareth Parry on this day, decision for this reason.

MR. PARRY: Yes.

CHAIR STETKAR: That is a good example of what people should be doing. If they are making assumptions, they should document --

MR. PARRY: Right.

CHAIR STETKAR: -- the fact that they made an assumption and the basis for it.

MR. PARRY: Right.

CHAIR STETKAR: Simply putting in examples where it says well, you will need to make assumptions and simplify things leads to a practice that we have

already, people simplify things --

MR. PARRY: Yes.

CHAIR STETKAR: -- out that are difficult to deal with and we see from operating experience that the things that are difficult to deal with lead to errors.

MR. PARRY: Right. And I --

CHAIR STETKAR: So it's that sort of philosophy that I'm kind of questioning, you know, in the context of the example.

MR. PARRY: Well, I think the plan is to actually have guidance on when you should be able to neglect a particular node or not. I mean, we are going to develop guidance on that. And one of the guidance might be, for these immediate actions, we don't model failures and follow that step. It's arguable, but that's one of the things that we will--

CHAIR STETKAR: But you do find to have guidance at that level of detail?

MR. PARRY: Yes, that's the plan.

CHAIR STETKAR: Okay.

MR. PARRY: Okay. I mean, how detailed it is we will see, but that's the plan. Because after all, we have to adapt to a number of different situations. And for the moment, for example, we

really only have the BWR procedure and as you know, BWR procedure is very, very different in the way that's structured. We have to also think about how to handle those.

But, yes, we plan to have guidance on that type of analysis. But I think even absent a guidance, if the guidance says document the assumptions that you have made that enable you to -- that led you to delete this step, would be a valuable thing to have.

CHAIR STETKAR: Well, I think it's essential.

MR. PARRY: It's essential, yes.

CHAIR STETKAR: That's essential.

MR. PARRY: Right.

CHAIR STETKAR: I mean, that's part of the problem we face now.

MR. PARRY: That is part of the problem, yes, right.

Okay. So in the analysis that we did for this, at Node 3 we said, okay, we are not going to consider that as a potential cause of failure.

So Node 4 then was failure to recognize the need for level control from the special role -- from the specific rule. And failure here would need for the crew to not see that the level in the steam --

both steam generators is dropping like a stone.

So it's probably pretty unlikely, but, nevertheless, it's a key task. And so we decided, yes, we will keep that node in the reduced tree for the quantification.

CHAIR STETKAR: Yes, I got confused. In the report, again, you know --

MR. PARRY: Right.

CHAIR STETKAR: -- I can only read what I can read. There seemed to be a discussion. I wrote some notes in the report about Node 4 that I thought you were going to get rid of it and then you finally said no, we're going to keep it.

MR. PARRY: Yes.

CHAIR STETKAR: It was a bit of, you know, kind of a consciousness sort of thing. I think that's worthwhile --

MR. PARRY: It was a bit of a stream of consciousness.

CHAIR STETKAR: -- for documentation, but --

MR. PARRY: Right.

CHAIR STETKAR: -- I'm glad you kept it.

MR. PARRY: Yes. No, I mean, I don't think you can neglect things like that.

CHAIR STETKAR: No.

MR. PARRY: Because you have to -- because there could be conditions under which that failure is going to occur. And we can get into a discussion.

CHAIR STETKAR: Half or two-thirds of the control room light and half or two-thirds of the control room dark.

MR. PARRY: Something like that maybe.

CHAIR STETKAR: Yes.

MR. PARRY: Okay. The next node we looked at was Node 5. And that's failure to recognize a total loss of feedwater at step SR 4.1. So you realized you got a problem with steam generator levels. You are into the specific rule. And then you fail somehow to recognize total loss of feedwater.

So we have looked at this. We analyzed what would happen when they get into the specific rule. And, essentially, we found that it's actually pretty difficult, once they have decided that they have a problem, for them not to realize that they don't have any feedwater at all. So --

CHAIR STETKAR: Is it -- it's probably easy for them to recognize that they don't have any feedwater at the moment. Is it easy for them to recognize that that is a permanent absolutely

irreversible condition?

MR. PARRY: No.

CHAIR STETKAR: Or that --

MR. PARRY: Well, I don't know. I'm guessing not, but I know where you are going with this, I think. You are going into the delay response thing again. Okay.

CHAIR STETKAR: If we are going to get to it, just walk me through that.

MR. PARRY: Yes, no, no. I think that's a good point, because the next node that we talk about is the failure to go to -- the failure to recognize that they need to go to feed-and-bleed cooling.

CHAIR STETKAR: Yes.

MR. PARRY: Okay. And that's contingent on having recognized complete loss of feedwater.

CHAIR STETKAR: They have to have given up on feedwater or --

MR. PARRY: Yes.

CHAIR STETKAR: -- at some other --

MR. PARRY: Or --

CHAIR STETKAR: -- compelling prompt.

MR. PARRY: -- have a compelling prompt, that's correct. And the compelling prompt is the one that they have, which is the hot-leg temperature being

greater than 600 degrees F.

So Node 5 and 6 sort of work together in a way. Okay. I think if they don't think they have got loss of feedwater, they will go down through the specific rule. They will try and establish feedwater. They will find they can't and they eventually get back to the, essentially, idea of can you initiate feed-and-bleed.

So what we did was didn't include Node 5, but we did include Node 6 in that in the reduced tree. Okay. So we have got the failure to recognize that they have a problem with steam generators and failure to go to feed-and-bleed, which -- for which they have compelling cues regardless of whether they have feedwater effectively.

So and then on the tree, there was a Node 8, which is failure to initiate feed-and-bleed cooling, which we didn't develop. The ESD that Stuart showed you, we can -- I mean, it has a branch for the actions that they have to take, but we didn't develop that in any more detail, but it is clearly something that we would want to include.

CHAIR STETKAR: Steam limitation.

MR. PARRY: As steam limitation, using Attachment 4.

But the other thing I want to point out though on that, on those trees, is that -- I wonder if I can go back up to --

MR. DANG: You should go forward.

MR. PARRY: Can I go forward?

MR. DANG: Yes.

MR. PARRY: Okay. Oh, yes. Well, yes, this is the reduced. Okay. That's fine.

CHAIR STETKAR: Go back.

MR. PARRY: No, no, no, that -- this will work just as well.

We have, on this tree, branches like 12*, which is the recognition of the need for feed-and-bleed cooling from Operator 8. These are static displays in the control room. They are not part of the procedures. They just remind us, the crew, that hey, if you get this condition, initiate feed-and-bleed.

CHAIR STETKAR: It's a specific plan?

MR. PARRY: It's a specific plan. It doesn't matter. It doesn't matter. That's what this is, okay?

CHAIR STETKAR: This --

MR. PARRY: So there is no -- and that's what Vinh was saying, this is asynchronous, in a

sense. This is not anything that we are led to.

CHAIR STETKAR: But these things always live there?

MR. PARRY: Yes.

CHAIR STETKAR: They are just --

MR. PARRY: They all live there.

CHAIR STETKAR: -- pictures on the wall?

MR. LEWIS: They are placards at various points.

CHAIR STETKAR: Huh?

MR. LEWIS: They are actually placards at various points around the control boards.

CHAIR STETKAR: Yes, but it isn't something like a klaxon horn that is going screams at the --

MR. LEWIS: No, no.

CHAIR STETKAR: It's not allowed. It's just a picture --

MR. PARRY: Right.

CHAIR STETKAR: -- that every day, eight hours or 12 hours every day --

MR. LEWIS: That's true.

CHAIR STETKAR: -- they sit in a room with those pictures on the wall.

MR. PARRY: Right, yes.

CHAIR STETKAR: Okay.

MR. PARRY: And there was another branch on the large CRT, which was failure to go to feed-and-bleed through EOP Step 6, which is something you would get to in time. But in the meantime, they also have the opportunity to revisit the specific rules, which is done with whatever frequency they do them at the plant and maybe that's probably driven by the way the scenarios develop.

But the key things here for this scenario is that because of the way we set it up to be very demanding, okay, by the time they get to looking at the specific rule, they will have reached the criterion for initiation of feed-and-bleed.

CHAIR STETKAR: Just because of the time?

MR. PARRY: Just because of the time it takes to get there.

CHAIR STETKAR: Right.

MR. PARRY: So then we have assumed that we have done the thermal hydraulic calculation to confirm this.

CHAIR STETKAR: Okay.

MR. PARRY: So for this case, they get through pretty fast to wait until they get to Step 6 in the procedure is way down in the procedures. So

what we looked at, these opportunities, Node 12 and Node 9, they are really opportunities to recover from an initial mistake. If for some reason they were not to initiate feed-and-bleed, they realize they have to initiate it, they have another shot when they get another look at the specific rules.

And that's the way this is -- these scenarios are structured. The first branch point if you like is the first node of which you get a down branch is the initial mistake that has been made. Anything beyond that is, essentially, an opportunity for recovery.

So any of those paths that lead to failure involve an initial failure and a failure to recover. And this is part of the philosophy that we had with respect to looking at HFEs is that typically they are not, you know, single points in time that usually people have a time to recover from mistakes, because of the inertia that is in the reactor.

So what we did was, we developed a reduced CRT for the quantification purposes based on analysis, the timing and the conditions that the -- that existed at the plant. Okay.

Now, describe to some extent in the report, as you say it's a fairly stream of

consciousness and discussion, but it's not so much that we want you to believe everything written there, it's just to illustrate the thought process we go through.

So the next step then is now to look at this and to start linking it to our quantification process, which is based on a set of Crew Failure Modes. Okay.

And so I think the next step I want to get to is to remind you what these Crew Failure Modes are or at least tell you what they are. In the current version, I think it's a little different possibly from what you saw six months ago, I can't remember whether we changed them significantly or not, but we grouped them in terms of various stages of the operator response.

And the specific ones that we have come up with are the plant status assessment, the response planning aspect and the action. It's not to say that there's not some cyclic stuff going on here, but this is, I think, a convenient way of breaking up the process.

So for the plant status assessment, we have a set of failure modes and they include:

Key alarm not attended to.

Critical data miscommunicated, which actually -- which captures the crew interactions to some extent.

Critical data not checked with sufficient frequency. This would be the sort of thing you would be concerned about for a monitoring type of process. You know, where you say watch this, watch the level of the steam generator and when it gets to X do something.

I won't go through each one of these in any detail. They are defined to some extent.

CHAIR STETKAR: What I did want to ask though, Gareth --

MR. PARRY: Yes.

CHAIR STETKAR: -- and I kind of asked this at the last meeting with respect to the proximate causes.

MR. PARRY: Yes.

CHAIR STETKAR: If I look at these two slides --

MR. PARRY: Yes.

CHAIR STETKAR: -- I see a list of, what, eight Crew Failure Modes for plant status assessment.

MR. PARRY: Right.

CHAIR STETKAR: Three for response

planning.

MR. PARRY: right.

CHAIR STETKAR: And two for action.

MR. PARRY: Yes.

CHAIR STETKAR: That tells me, as an analyst, that I need to spend most of my life looking at plant status assessment, because that's apparently the most important cause of human error. And it's not -- is that supported by the actual research in literature?

If I just think of the --

MR. PARRY: Yes.

CHAIR STETKAR: -- fraction of my life that I'm going to spend on this, I'm going to spend 8/13^{ths} of my life, assuming that I put equal effort on each of these Crew Failure Modes, simply assessing the availability of data that can be processed. And it's not clear if that level of effort is fully supported by our experience from actual events or from the literature research.

So I would be curious whether the literature research kind of supports that wading in that area. I know it's easy to identify Crew Failure Modes for identifying data and, you know, misinterpreting data and miscommunicating data and

data and data and data. It's just not clear to me. And I don't know. So I guess I'm asking you honestly.

MS. HENDRICKSON: So I can comment, this is Stacey Hendrickson from Sandia Labs, at least from the point of view of the literature research, that the way these are setup with plant status assessment, response planning and action, when you get to response planning, you are assuming, at that point, that they have made a correct assessment of the plant status.

So in real-life, you may have quite a few errors that occur in decision making, response planning and action, but many of those errors may have actually been promulgated from an error in understanding in situation assessment and situation awareness.

So what we focused on here then is making that line between this is really the initiation of the error and it came from the understanding of the situation. It came from the situation awareness. Given if you have a correct assessment of situation, this is then where you move into response planning.

It's when you break it down like that, you really do see a preponderance of initiation of errors anyway through the understanding.

CHAIR STETKAR: Okay.

MS. HENDRICKSON: Now, events that we have seen at the plant, I think have also evolved that way, but --

CHAIR STETKAR: Okay. All right. Good.

MR. PARRY: Okay. So yes, as you noted, we now only have three --

CHAIR STETKAR: Well, let me again, I want to put it in terms. You said situational awareness. You are saying that most of the errors originate in this plant assessment? In other words, they make an incorrect assessment, based on the information before they go into the response, on the next page, which talks about response planning. I just phrased that slight different. Is that --

MS. HENDRICKSON: Yes.

CHAIR STETKAR: Okay. Yes, that's a good answer, yes, no?

DR. XING: Yes, this is Jing. I have a slight evasion to that. It's not the status image. My understanding of what the status is is not the majority error came from data collection.

You have -- let's say for the second stage of planning, you have -- you can have new errors that -- in your decision making process, can have many ways to make a mistake. But some of those decision making

errors was already came from your decision making, so it's already addressed there.

And another reason I think this look not so equally distribution of the failure mode, the failure mode is focused on the observed part of operator behavior, which in the data assessment on that, we have more information in the observation.

While in the response planning part, especially right now, we are focused on procedure operation, we have less observation than we had in the data assessment.

CHAIR STETKAR: That's okay. I mean, I understand that --

DR. XING: Yes.

CHAIR STETKAR: -- you know, from as pragmatic sense. But also, in terms of, you know, a holistic methodology, if you want to call it that, we should be focusing our efforts in areas -- even though they might be difficult and haven't been observed in the areas where the operating experience and the literature tell us people are prone to error.

DR. XING: Yes.

CHAIR STETKAR: And not just because it's easy to identify, you know, a list of eight things and it's easy for me to evaluate those. In the same way,

when we are talking about proximate causes in terms of actions, you know, there used to be, there is now only two, but a long list, because people have thought about those particular activities in the past. And they are relatively easy to draw a laundry list on.

But it's not necessarily where we want going forward to focus our effort in a more balanced assessment. But I mean, some of the stuff that Stacey said seems to support the notion that --

MR. PARRY: Right.

CHAIR STETKAR: -- a fairly extensive assessment of the plant status, an understanding of the plant status is a key role.

MR. PARRY: Right.

DR. XING: Yes.

MR. PARRY: And I think another thing you will see when Stacey talks later is that, in fact, the PCs that we -- the proximate causes that were identified have been mapped into the CFMs in an appropriate way.

CHAIR STETKAR: That I want to see how that was done.

MR. PARRY: Okay.

CHAIR STETKAR: Because that also wasn't crystal clear from the --

MR. PARRY: Right. But that's part of the, you know, validation, if you like, but this is an adequate set. So I won't say complete, because nothing is ever complete.

But so for response planning, we have a limited number. I think this is an area that may be when we extend to non-procedural-based things. We may think about a couple more CFMs in this area.

CHAIR STETKAR: I would really challenge you to start thinking about some of those --

MR. PARRY: Yes.

CHAIR STETKAR: -- you know, now.

MR. PARRY: Yes.

CHAIR STETKAR: I know you are under time pressure, but --

MR. PARRY: Yes. And as far as the action goes, we've got two CFMs here. They are the complete omission of an action or incorrectly performing an action. So that's -- so what I wanted to do is to, at least, talk through say one of the nodes in that reduced tree to show you how we would choose the right CFMs for that node.

So this has been one of the questions that people have raised. Well, how do you know which CFMs are applicable? Right? And the way to look at it, as

I think, if you understand what the node represents in terms of the task, and you understand the demands of the task, then you will be able to determine which of the CFMs are relevant.

So let me give you an example. First of all, looking for those that are not relevant. Okay. Node 6 is, let me remind myself what Node 6 is, the failure to recognize you've got to feed-and-bleed cooling from a specific set in the proceeding, that's the way we have defined it.

And, specifically, what we are concerned about is that probably failure to recognize that the temperature in the hot-leg is greater than 600 degrees F, because that's the condition we know for sure exists, at this point.

So the key alarm not attended to is not a relevant CFM in this case, because there is no alarm with it. Okay.

The critical data not obtained, we decided that that's also -- that particular CFM is for the plant itself to not give the -- for the data not to be available because of the condition of the plant or the context of the HFE. Okay. That's what that -- that's how that CFM is defined. It's hardware-related or system-related. It's not operator-related. The data

is unavailable.

MEMBER BROWN: But you said the data --

MR. PARRY: In this case --

MEMBER BROWN: -- is available.

MR. PARRY: Yes, the data is, that's the reason we are not taking the CFM. Okay. It's not a relevant CFM for this HFE because we know that the data is available.

MEMBER BROWN: So you don't consider that it wasn't obtained?

MR. PARRY: Right.

MEMBER BROWN: Because it is available.

MR. PARRY: Because it's available, yes.

MEMBER BROWN: And here it's available, the operator saw it and he would have taken action on it?

MR. PARRY: For this CFM.

CHAIR STETKAR: For this CFM.

MEMBER BROWN: Okay.

CHAIR STETKAR: Yes, but one point that Charlie made is how do I know the operator obtains that data? Despite the fact that the --

MEMBER BROWN: Right.

CHAIR STETKAR: Maybe we get it down, let's go through the remaining six. But just simply

because the temperature grade gauge is available and it's reading 632 degrees fahrenheit doesn't mean that I look at it.

MS. HENDRICKSON: Right.

MR. PARRY: No, it doesn't.

MEMBER BLEY: This is Dennis. The Robinson event has a number of cases just like that.

CHAIR STETKAR: Exactly. I mean, that's -- I keep coming back to the Robinson event. They had all of the information available to tell them every -- well, maybe not everything, Dennis. You know more than I do, but they had a lot of information available. They just either, for a variety of reasons, didn't look at it or if they looked at it, they didn't recognize that it was relevant.

MR. PARRY: Okay. We have got those covered in some of the ones that I have retained.

CHAIR STETKAR: Okay.

MR. PARRY: Okay. So In this case, we also have a CFM that says it's a decision to stop collecting critical data. Okay. And this is intended to be applied to things that are monitoring tasks. This is for the case where the operator is collecting data. He decides hey, I've got enough to determine that I know what's going on. I'm going to stop

collecting the data, at this point, that's what that CFM represents.

It's a deliberate decision to stop collecting the data. And it's applicable to this sort of monitoring task when you are collecting the information on time. That's not the case here, because we know that at the time that they get to this point, the data is what it is and they are supposed to check it. They are directed to check it. Okay.

That's the way we have defined the CFM. These CFMs are going to be defined specifically in the context of their applicability. Their applicability is contingent upon the type of activity that is going on and the design follows those types of activities.

CHAIR STETKAR: Keep going.

MR. PARRY: Okay. All right. I don't want to go through each one of these, I just want to give you a flavor for the way that we are doing the --

CHAIR STETKAR: These are all of the CFMs that were discarded for whatever reason?

MR. PARRY: These are the CFMs that were discarded. So the ones that were retained are the following four, okay?

The critical data incorrectly processed. And I think that that gets to the point that you said

well, okay, they looked at the hot-leg temperature and they read it and they said well, no, that's not 600 degrees F, that's something else. Okay. They saw something different, in other words.

There is another one which is more of a deliberate thing and that's the data that -- they see it, but they dismiss it. And you will see when we discuss, well, you won't see it today, but you will see it in the report, this particular CFM, one of the reasons for dismissing it is that they don't have -- that they have a mental model of what is going on that would be preferable than if they didn't include this information. Although, this information they could dismiss and still have a credible mental model, is what I mean to say. It's a better way of saying it.

MEMBER BROWN: Let me ask kind of a simple question.

MR. PARRY: Yes.

MEMBER BROWN: And see if -- we either did this right or wrong and I'm not saying it's -- I was in the Naval Nuclear Program and I must have -- I didn't disagree with your planned assessments, because I must have read 15,000 personnel error incident reports for that or operational experience reports, whatever you want to call them.

And the items you had in here are very relevant to what operators do or don't do with information. But these ones where you talk about dismissed or discounted was a very interesting one, because one of the precepts we used to preach, I was an I&C guy and I also had the protection analysis responsibility and actions for developing those procedures for part of them anyway, was believe your instrumentation.

In other words, don't ignore it, unless it is so blatant, you know, that it about knocks your socks off. And is that -- does that play in the world of how you all assess data being incorrectly processed or --

MR. PARRY: Yes.

MEMBER BROWN: -- dismissed or discounted?

MR. PARRY: Yes.

MEMBER BROWN: I mean, is there -- I have not -- my familiarity with operators in the commercial plants is not similar to what we did in the Naval Nuclear. And I'm not saying one is right or wrong, that's not the point of the question. It's just that we tended to force taking action --

MR. PARRY: Yes.

MEMBER BROWN: -- to put yourself as close

as you could to a safe circumstance, based on the information that you did see. And I don't know if anybody else was in the program that is an operator here, Dennis was. He is -- so I don't know whether he remembers that or not. But I'm just curious based on looking at some of these pathways you talked about, whether that was relevant or not.

MR. PARRY: It is. It is certainly relevant to identifying the Crew Failure Mechanisms for that failure mode. Okay. So the sort of things that we address are is there something about the scenario that would lead them to a mental model that would be perfectly correct if this data were not included in the assessment?

But as part of the factors that we -- one of the important factors for that that compensates for that though is whether they are trained, how they are trained to look at this data. The fact that that goes against it is if they know that that indication is not a very reliable indication and it's not reliable under certain circumstances, that would go to support them dismissing the information.

So those are the sort of things that we look at.

MEMBER BROWN: Developing and told to be

mindless, obviously, you don't want anybody to ever be mindless.

MR. PARRY: Right.

MEMBER BROWN: But --

MR. PARRY: Right.

CHAIR STETKAR: I'll give you a good example, Charlie. This is an actual example that happened a number of years ago. A main steam isolation valve in an operating nuclear plant, the gates separated from the stem and the valve went closed. The operators saw deviations in pressures, main steam line pressures. They knew that the pressure instrumentation must have just gone out of calibration on the loop that went closed, because, you know, all the lights said that the valve was open.

And how could it else -- be otherwise? So they recalibrated the pressure transmitters. And after about two or three evolutions with those darn -- that darn loop of instrumentation always being different from the other three, they decided they would take a look at things and found the valve closed.

That's a mental model that they could rationalize it was a bad piece of instrumentation, even though it was perfectly correct.

MEMBER BROWN: Yes, I've got an example.

CHAIR STETKAR: They rationalized this. So I think that's the type of thing you are talking about here.

MR. PARRY: Yes, right.

MEMBER BROWN: I've got an example similar to that nuclear instrumentation, although I can't repeat here.

CHAIR STETKAR: Yes, I can repeat this one, because it was --

MEMBER BROWN: It went -- that had a similar outcome. It took a while to recognize that--

CHAIR STETKAR: Yes, that's the notion of what you are asking about.

MR. PARRY: Yes, that's the notion, yes. There has to be a reason why they would do it and then we have to look for those reasons. And some of those reasons come from the plant and some of them come from the training.

The other one that we think is relevant here is the critical data miscommunicated. I think anywhere -- now, or might be relevant, it depends really where the information is coming from. If the procedure reader is directly reading this stuff, that's one thing. If it is coming from another

operator, then clearly that's a different issue, but it is one of the ones that we always include if we don't know for sure whether the communication between the crew members is essential for performing this task. So we left it in here.

And there is your favorite, John, delay implementation. We have got that one in here. Okay. So we will discuss the decision-tree a little bit for that later on, so you can see how practical --

CHAIR STETKAR: Yes, some of my concerns are it isn't always necessarily -- I mean, I guess, in principle, you can always say that anything manifests itself into a delay past the success point.

MR. PARRY: Right, yes.

CHAIR STETKAR: So this -- but it's more of a catchall that would always be applicable, I think.

MR. PARRY: Yes.

CHAIR STETKAR: In any analysis.

MR. PARRY: What we try and model here though is a deliberate decision to delay.

CHAIR STETKAR: Okay.

MR. PARRY: Right? Not that it takes too long to do it.

CHAIR STETKAR: How do you -- let me --

MEMBER CORRADINI: Say that again, please, sir.

MR. PARRY: Yes, what we model in here -- well, let me back up a little bit. With the CFMs, what we are trying to do is to have them orthogonal, in a sense. And we are going to try and capture all the different crew failure scenarios we can think of within this set of CFMs.

So we don't want things to overlap, so something that just takes them too long to execute something once they have started it, doesn't come under delay implementation. That would be a failure to do the action correctly. So this --

MEMBER BLEY: Gareth?

MR. PARRY: Yes?

MEMBER BLEY: Where do we clarify the orthogonality and which goes with which? I'm not sure I picked that up.

MR. PARRY: You probably won't have picked it up fully yet, Dennis, because, I think, we are still working on it. As we develop the decision-trees for the different CFMs, it becomes clearer, I think, to us as we are developing them and how we are going to make sure that these are orthogonal.

So if you like, it's a work in progress.

MEMBER BLEY: Okay.

MR. PARRY: We have tried to do it a little bit in the definitions and the documents, but it's probably not as clear as it should be in those descriptions.

CHAIR STETKAR: So, Gareth, for my benefit.

MR. PARRY: Yes.

CHAIR STETKAR: My scenario that they actively attempt to get that backup feedwater pump running for too long, puts in this --

MR. PARRY: Right.

CHAIR STETKAR: -- that's an active decision --

MR. PARRY: Right.

CHAIR STETKAR: -- to take, you know, that path --

MR. PARRY: Yes.

CHAIR STETKAR: -- which is the wrong path. How does -- you retained these four and I think I understand the four. Where does the operator simply not recognize in that 600 degree alarm? Is that incorrectly processed?

MR. PARRY: Yes.

CHAIR STETKAR: Okay.

MR. PARRY: Yes.

CHAIR STETKAR: Okay.

MR. PARRY: So what we will do later on, we will talk a little bit about the delay implementation CFM in more detail. Okay.

The way this works is that the probability of failure of a CFM is determined using a decision-tree, which I think I get to that in a couple of slides.

CHAIR STETKAR: There will be a 1:1 correspondence between decision-trees and CFMs.

MR. PARRY: Okay, yes.

MS. HENDRICKSON: Yes.

MR. PARRY: Yes.

CHAIR STETKAR: So we will have 13 decision-trees?

MR. PARRY: We will have 13 decision-trees, that's right, yes.

CHAIR STETKAR: At the moment.

MR. PARRY: And the way you choose the path through the decision-tree is based on analyzing the performance --

CHAIR STETKAR: Okay.

MR. PARRY: -- to include factors specifically. So --

MR. FORESTER: Excuse me.

MR. PARRY: I think this is now a good translation.

CHAIR STETKAR: John?

MR. FORESTER: I just want to make one point and maybe it's already clear and my apologies if it is. But keep in mind that when you get to the response planning phase and you are lessening questions about delay implementation, the assumption is there has been a correct assessment.

MR. PARRY: Yes.

CHAIR STETKAR: Right.

MR. FORESTER: We are assuming the earlier ones are dealing with the situation of assessed.

CHAIR STETKAR: Right.

MR. FORESTER: And there is an assumption there that the information at least has been kept, but now whether they process it accordingly is the question.

MR. PARRY: Right.

MR. FORESTER: So it's not like to delay implementation. We're looking all the way back to see if there is errors in Situation 7, but that particular one there is an assumption that they got the right information. They actually know the problem. Now, we

are asking why were they delayed, given the understanding of what's going on.

And your example is a reasonable reason that they might do that. But there is an assumption that they understand that.

MR. PARRY: Yes, thanks, John. I think that's a good explanation. There is, going into these CFMs into the three CFMs that relate to response planning, an assumption that they have the correct plant status assessment. So this is a delay knowing that -- what it is they are supposed to do, they delay it deliberately, which I think fits into that as well.

CHAIR STETKAR: Yes.

MR. PARRY: Okay. Okay. Then at this point then, I'm going to hand over to Stacey and April to talk about the transition from the PCs to the PIFs and the CFMs.

CHAIR STETKAR: My goal by the time we get done with this project is for presenters to have --

MEMBER BLEY: Are we jumping to the other slide set?

CHAIR STETKAR: Yes.

DR. XING: Yes, Part 2.

CHAIR STETKAR: -- to be able to have a presentation where nobody uses a complete actual

English word in at least one sentence.

MEMBER BROWN: That one is easy.

CHAIR STETKAR: So let's talk about the PIFs through the PCs to the CFMs.

We're on the second set of slides, Dennis, Agenda Item 6.

MS. HENDRICKSON: So this is a good time to take a little bit of a sidestep-in then and get into the psychological literature review that was done. And So April Whaley and myself will present on that. And the purpose of this sidestep-in is to explain how we came up with the performance influencing factors that were used in describing how the Crew Failure Modes came to be and then describing the quantification through the decision-trees.

And realize that the Crew Failure Modes, the CFMs, explain how the crew failed, but not why. And so the performance influencing factors then help to answer that question.

The psychological literature review then is also used to answer that question and it provides that mapping of explaining how the performance influencing factors are directly related to the CFMs.

The initial results of the psychological literature review were proximate causes. The

proximate causes, however, cannot always directly be translatable to a consequence that is relevant to the system. So the proximate causes really reflect the cognitive mechanisms that drive human behavior and then can also drive human error.

And then those can then be related to the CFMs which explain how we have -- how they are related to nuclear power plants and relate to consequences to the system.

So the CFM that Gareth had mentioned that we are going to focus on is delay implementation. And he described a little bit of what delay implementation is meant to cover.

But, basically, you have the crew has decided to delay this action to try something else and such that then your response is not successful, such that the HFE occurs. What this assumes is that you have the correct plant status assessments. You already have the correct situation awareness, correct understanding of the scenario. You also have the correct understanding of the critical safety functions that need to be controlled or restored.

This is -- versus the other CFM which is choose an appropriate strategy. There is a little bit of a difference between those two. Choose an

appropriate strategy is really focusing on two strategies or more have been presented to the crew and they reject one in favor of another.

So they actively choose to act on this action, choose to go with this strategy and reject another one versus, in this case, in delay implementation, it's not that they actively rejected an action or strategy, but they have then given preference to an alternative one and they are going to try it first and they are going to try everything they can in order to make this one hopefully be successful. And in which case they have then delayed implementation of the correct one.

I'm going to hand over to April for a little bit to go through then how we actually went through the mapping of the performance influencing factors and proximate causes to choose the Crew Failure Mode.

MS. WHALEY: Okay. My name is April Whaley. I work at Idaho National Lab in the Human Factors Department. And I have been --

MEMBER BLEY: April, this is Dennis.

MS. WHALEY: Hi, Dennis.

MEMBER BLEY: Can I back up to Stacey's last statement? I'm sitting here trying to peruse it

and think about it. They went to -- it wasn't the correct one. And the correct one is a concept that is a little tough here, because one would presume given the case she described where they had a correct understanding and they know what the critical safety functions are, they picked the path that, you know, might in the end turn out to be not the optimal one, but it's the incorrect one?

How do we determine correctness in this process where you have alternatives and you have to find your way through it?

MR. PARRY: Dennis, let me just make a comment here. I think this is -- these two CFMs which is choose incorrect alternative and delay implementation are the ones that I think we are refining a little bit, because I think it does need to be clarified is what we mean by this one.

But the essence there is that they know that this is the thing that will save the day, but they have decided to delay it. And for whatever reason, one of the reasons might be, as John said, that they know that they are going to be able to restore the system.

MEMBER BLEY: But --

MR. PARRY: It's not really an alternate

strategy in that sense.

CHAIR STETKAR: It is.

MR. PARRY: Well, it may be, but it's not.

CHAIR STETKAR: If they successfully got the backup feedwater pump running --

MR. PARRY: Yes.

CHAIR STETKAR: -- they would have saved the day.

MR. PARRY: Yes.

CHAIR STETKAR: And not messed up the containment.

MR. PARRY: No, I know.

CHAIR STETKAR: They would have saved it better.

MR. PARRY: So but we are still working on the definitions of these CFMs to make sure that they are orthogonal. We had a thought at one point that maybe we won't even bother with the alternate strategy one, because everything would be covered in this one, but we have to think through the types of scenarios that we might have to address and we are going to tailor them specifically. So it's --

MEMBER BLEY: I guess the thing I'm hanging up on, Gareth, is, you know, this idea that, you know, after the event is over, you might know what

was correct. You know that if they had done A instead of B, they would have won.

MR. PARRY: Right.

MEMBER BLEY: But given the spot they are in and the decisions they have to make, if correctness were clear, they would, of course, go the correct way. But it seems like we are mixing the Monday morning quarterback approach with the psychological things we have talked about earlier, which sets them up for only seeing what they can see in the beginning. So I'm a little confused how we define that correctness thing. And that's what was bothering me.

MR. PARRY: Well, I think the correctness in this in terms of the correct plant status assessment is, again, that we know that they have to say implement feed-and-bleed, but the failure mode is they delay implementing it beyond the point at which it would be successful.

MEMBER BLEY: And we would assume that whatever reason they delay it is for some other and some thing correct, a concern that they were dealing with. I'm just wondering --

MR. PARRY: Yes.

MEMBER BLEY: -- if correct is even the concept --

MR. PARRY: Okay, yes.

MEMBER BLEY: -- that helps us out in any of this.

MR. PARRY: Well, yes. I think that's some of the semantics we have to work out, I think.

MEMBER BLEY: Okay.

MR. PARRY: But it's totally hung up on the word.

MS. WHALEY: Yes. And I think that, at the moment, we are looking at it as correct from an objective PRA perspective.

MR. PARRY: Right.

MS. WHALEY: As defined by the scenario, rather than what the operators see in the --

MR. PARRY: Right.

MS. WHALEY: -- moment.

MR. FORESTER: Yes. I guess I would comment, too, that the -- once they have done a correct situation assessment and there is a correspondence between the cues that are available and what the procedures are telling them to do, so in a sense, the correct, what we're calling the correct response in this case, case is the case that is in -- that was directed by procedures given the cues.

MR. PARRY: Yes.

MR. FORESTER: So that is the correct action, but, per procedure, they may delay that action for some other alternative, possibly trying to get a different system back. But the successful path is to do, you know, what is directed by procedure.

CHAIR STETKAR: It may be semantics, but it's important.

MR. PARRY: No, and that's a good point. I think we --

CHAIR STETKAR: This orthogonal --

MR. PARRY: -- something we need to take away and think about to make sure we define them clearly.

MS. WHALEY: Yes.

CHAIR STETKAR: Because there's a large difference between knowing, I know, I need to initiate feed-and-bleed cooling right now and I'm going to sit there and wait for some ill-described reason.

MR. PARRY: Right.

CHAIR STETKAR: Versus having taking completely different, equally successful strategy that didn't work.

MR. PARRY: Right.

CHAIR STETKAR: And precluded my other option.

MR. PARRY: Yes. And then those -- that's the sort of orthogonality we have to capture.

CHAIR STETKAR: That's right.

MS. WHALEY: Okay. Returning to the literature review, the literature review process that we went through is described in detail in the report that we submitted, 250 some odd pages of it. And the main product of that literature review is the cognitive framework-trees and the Appendix A Tables.

And we are not going to talk about the literature review in and of itself, because that's pretty well-documented and we don't have enough time to go through it all. So what we are going to talk about is well, how do we use the product of the literature review and use it to inform the decision-tree development and identify what are the relevant factors for the various different CFMs.

So because he ultimate goal of the literature review is to provide this technical basis to underline the method, to organize the literature in such a structure that can be used as a tool and to identify the causes mechanisms and the factors that can lead to failure.

So what we did, I mean, what the ultimate goal is is to identify the relevant PIFs and inform

the decision-trees with the relevant PIFs, we went through a four step process.

So first, we started by looking at the macrocognitive functions that we had analyzed in our literature review. We have macrocognitive functions of detecting, noticing, sensemaking, understanding, decision making, action implementation and team coordination.

So when we looked at this CFM, we looked at the definition of the CFM and we then looked at the definitions of the macrocognitive function and we decided well, you know, by the definition of the CFM, the detect, notice and sensemaking, understanding are not applicable because the assumption is that they have the right information and they properly understand it.

Decision making is relevant, because, you know, that is the CFM, the decision to delay. Action is not relevant, because they haven't actually taken the correct action yet. And team coordination if it is an issue, then we have a separate CFM with which they assess that all by itself.

So once the macrocognitive function is identified as relevant, we look at the underlying framework structure to determine well, what are the

relevant elements of this structure for this particular CFM?

So we then look at the proximate causes. What are the causes of failure of decision making? And so we review the information in the literature and in the Appendix A Tables and we try to decide well, which ones of these are relevant.

We then kind of go through the same process for the mechanisms and say well, you know, for this cause of failure, what are the relevant mechanisms for the CFM and then what are the relevant PIS? So we just used this whole process to identify. And then I'll hand it back to Stacey, since this is her area.

MS. HENDRICKSON: So let's dig a little deeper into how we -- not how, but what proximate causes and cognitive mechanisms that we really determined were applicable for this particular CFM delay implementation.

So we realized we need to focus on the macrocognitive function of failure of decision making. Failure of decision making has three proximate causes linked to it. This was based on the findings from the literature review.

Incorrect goals or priorities set. Any

time you are faced with making decisions, you establish goals, which then you determine the effectiveness of your solution against your term of success of achieving those goals against.

The second proximate cause incorrect internal matching. This is a process in which previously through situation awareness through the understanding of sensemaking, you have come up with a mental model that represents the scenario you are faced with.

The internal pattern matching is where you take that mental model and compare it to previously encountered scenarios to understand if what you are encountering is typical, have you encountered it before or is it something more novel?

And then the third proximate cause in which errors could occur is incorrect mental stimulation or evaluation of options. So once you have determined if this situation is typical or if it's novel, then you generate a set of solutions of which you would try to respond to the situation.

After generating the sub-solutions, you go through mental stimulation in which you apply these solutions and then determine their effectiveness as well as their applicability.

So these are the three proximate causes in which errors may occur. And we determined that for this Crew Failure Mode delay implementation, all three of these proximate causes may be relevant for explaining how errors may occur. In other words, for explaining how that CFM may come to be.

So we don't want to go through each one of these, but let's take one of these proximate causes, incorrect goals or priorities set and look at how it breaks down to mechanisms in which those mechanisms then would have been determined as applicable.

And digging into this next level and as we keep digging down, remember the purpose and ultimate goal then is to determine what the performance influencing factors are. What this also then tells us is how those performance influencing factors can actually bring that Crew Failure Mode into being.

So the mechanisms that can drive this proximate cause are incorrect goals selected. In other words, when they are initially establishing the goals of which you are going to judge the success of your decision against, you choose the wrong goals.

A second one would be goal conflict. And I'm going to hold off and explain that a little bit because we are actually going to dig deeper into that

one.

A third one could be incorrect prioritization of goals. So you have the correct goal selected, but you actually are incorrectly prioritizing them as to which one you need to attack first or which one you need to try to solve first.

And then finally, incorrect judgment of goal success.

When you look at them in the reference of this Crew Failure Mode delay implementation, we decide that the first three are relevant or applicable. The last one, incorrect judgment of goal success is not applicable in this case, because we are not necessarily looking at a goal already been -- a goal that has already been put in place and that we can evaluate the success of it.

For this Crew Failure Mode, we are really looking at putting the goal in place. In other words, putting the action in place in order to achieve the goal. We haven't yet achieved the goal to judge against success. Yes?

CHAIR STETKAR: I think I need to understand that and this is important because for all eternity in this specific decision-tree or this specific Crew Failure Mode, no analyst will ever judge

that proximate cause. It is now completely eliminated, despite the fact that the literature review has identified contributors to a mechanism that contributes to this proximate cause.

So I need to understand what you really mean by that.

MS. HENDRICKSON: So let me --

CHAIR STETKAR: And let me ask you an example. Suppose that my goal is to depressurize the primary system and cool it down, such that I can get some low pressure cooling system in place before something really bad happens. And suppose I'm not particularly aware of how fast I can cool down. I don't know how fast I can cool down.

So we are now not only asking them do you start it, I might delay it because I didn't realize that I couldn't cool down fast enough. I thought I could cool down faster, but I actively delayed it.

MS. HENDRICKSON: Okay.

CHAIR STETKAR: That is an, in my mind, incorrect judgment of the goals success. I thought that I had six hours to do the cool down, but, indeed -- or I thought that I could cool down in three hours, but, indeed, I --

MR. PARRY: Because of circumstances --

CHAIR STETKAR: Because of circumstances I didn't get into until I started it.

MS. HENDRICKSON: Yes.

CHAIR STETKAR: And yet, you know, I'm not sure, how does that map into the other mechanisms?

MS. HENDRICKSON: Let me go back one.

CHAIR STETKAR: I'm always curious about eliminating things in terms of permanence that I need to think about as an analyst.

MS. HENDRICKSON: Right, right. So let me clarify, first, it's not the proximate cause that is being eliminated, but that mechanism --

CHAIR STETKAR: That mechanism is being eliminated.

MS. HENDRICKSON: -- that being --

CHAIR STETKAR: I'm sorry. I am up on--

MS. HENDRICKSON: I think what you are describing could actually be covered under this incorrect mental simulation or evaluation of options. So if you are thinking of actually putting in place a solution to require more time than it does or if you incorrectly maybe estimate how much time you have available, it may actually impact your simulation of how that alternative would play out.

MR. PARRY: And if I can add there, we

actually include that as a potential PIF in the decision-tree.

MS. HENDRICKSON: Yes. And we address that here with this particular proximate cause.

MR. PARRY: Right.

CHAIR STETKAR: I'm reading the mechanisms under that incorrect mental simulation or evaluation of options in your Appendix 3.3. And those are incorrect portrayal of the action? I know what I need to do. Incorrect inclusion of alternatives? No, I know I want to cool down. Misinterpretation of procedures? The procedure tells me to cool down. It doesn't tell me exactly when to start. Inaccurate portrayal of the system response to the proposed action. Maybe. Cognitive biases? Yes, I don't know, maybe.

MS. HENDRICKSON: It's kind of a catchall, yes.

CHAIR STETKAR: I'm -- it's just not at all clear to me why that mechanism doesn't apply.

MS. HENDRICKSON: Okay. Well, that's --

CHAIR STETKAR: Because I didn't clearly know where I needed to be and when I needed to be there.

MS. HENDRICKSON: Yes.

CHAIR STETKAR: And that, to me, would seem to be an incorrect judgment of the goals success.

MS. HENDRICKSON: Yes. It's a good point. Yes, and this is one of the reasons why we are here. I mean, this is still largely --

CHAIR STETKAR: I mean, I have no find -- you know, I didn't raise any questions when you had three yellow highlights on the proximate causes, because this -- I have to think about everything.

MS. HENDRICKSON: Yes.

CHAIR STETKAR: And somebody will have to think about everything going forward.

MS. HENDRICKSON: Knowing --

CHAIR STETKAR: It's when we start --

MS. HENDRICKSON: When you start eliminating --

CHAIR STETKAR: Eliminating --

MS. HENDRICKSON: -- that's the key. And then that's why --

CHAIR STETKAR: -- there must be really, really good --

MS. HENDRICKSON: -- I wanted to --

CHAIR STETKAR: -- universal justification for why I never have to think about that for anything I might ever come around for using that. That woke us

up. For the record, that was not an earthquake.

PARTICIPANT: Are you sure?

MS. HENDRICKSON: No, you are absolutely right. And that's why I wanted to focus on that one, which is to say this is why it was eliminated.

CHAIR STETKAR: Okay.

MS. HENDRICKSON: Because this -- these are the building blocks for the decision-trees.

CHAIR STETKAR: Oh, yes.

MS. HENDRICKSON: And so if we leave one out, we need to provide -- leaving one in, you need to explain why you leave it in.

CHAIR STETKAR: Leaving one in is easy.

MS. HENDRICKSON: I mean, that's fine.

CHAIR STETKAR: I can, you know, build guidance for --

MS. HENDRICKSON: Yes.

CHAIR STETKAR: -- people to think about that and why it may only apply in very narrow situations.

MS. HENDRICKSON: Yes.

CHAIR STETKAR: Omitting it means nobody will ever think about it again.

MS. HENDRICKSON: Exactly, exactly. Now, I also want to show one thing that helps to address

some of the concern, but not all of it.

Notice the performance influencing factors that relate to the mechanism that we have thrown out. They are very similar to the performance influencing factors that are included in the ones that we actually are keeping in.

CHAIR STETKAR: Similar but not --

MS. HENDRICKSON: So --

CHAIR STETKAR: -- precisely the same.

MS. HENDRICKSON: Exactly.

CHAIR STETKAR: Yes.

MS. HENDRICKSON: So they are similar, so you can -- you have some assurance that these performance influencing factors are still being addressed. However, when it is being thrown out, they may not be addressed or the questions being asked about them may not be specific enough to address this mechanism.

So a lot of thought needs to go into why these are thrown out. You are absolutely right. And so hopefully we can come up with a better answer for why it is being thrown out.

MS. WHALEY: Yes.

MS. HENDRICKSON: So we will look at that again.

CHAIR STETKAR: Yes, go on. I mean, you know, that's a general comment.

MS. HENDRICKSON: Yes.

CHAIR STETKAR: Because these decision-trees, you know, will -- at least it's my understanding, they will be cast in stone.

MS. HENDRICKSON: Yes.

CHAIR STETKAR: They are then the framework that I perform the analysis in. And really smart people sitting around a funny-shaped table at one time made all these decisions.

MS. HENDRICKSON: Yes.

CHAIR STETKAR: And I don't need to worry about those. So omitting things should be -- you know, the bar for justification of omitting things --

MS. HENDRICKSON: Yes, right.

CHAIR STETKAR: -- is really high.

MS. HENDRICKSON: Okay.

MR. PARRY: Yes, I actually think you are right, but I think in the end, we do capture that particular flavor in the PIFs and even in the mechanisms that come in here, I think. But we will carry on.

MS. HENDRICKSON: Okay. So once a mechanism is chosen as truly being important, those

are the PIFs that we really focus on. And what I want to do is look at this goal conflict in a little more detail.

CHAIR STETKAR: But by the way, the same comment, obviously, applies on the PIFs because, for some reason, you have eliminated the PIF for task load under incorrect prioritization of goals. At least if I recognize the highlighting there.

MS. HENDRICKSON: Yes. So in this --

CHAIR STETKAR: And that also was --

MS. HENDRICKSON: -- when we get down to the PIF level, it's not really the task load has been eliminated. We haven't necessarily seen it as being as one of the most important drivers, but really the more important details, I think, is the evaluation of the mechanisms, because then, once we evaluate a mechanism as being important, we are going to evaluate all of the PIFs.

CHAIR STETKAR: Well, when you say all of the PIFs, but only the PIFs that are identified for that particular mechanism.

MS. HENDRICKSON: For that mechanism.

CHAIR STETKAR: And I don't see task load, for example, identified as either -- in either of the other two mechanisms. So task load now is something

that I don't need to think about in the context of this decision-tree.

MR. PARRY: Actually, we do.

MS. HENDRICKSON: We do ask about it.

CHAIR STETKAR: You do some place? Okay.

MS. HENDRICKSON: In the decision-tree we do.

CHAIR STETKAR: Under --

PARTICIPANT: Under different PC perhaps.

MS. HENDRICKSON: Yes, um-hum.

MR. PARRY: Can I also make a comment here? I think this might be relevant to your concern. I'm not convinced that the PCs are necessarily orthogonal. Right? They are not necessarily, so, I mean, even though these words might have been dismissed in this case, there are similar words in another case, in another mechanism that could also be the same thing, right?

CHAIR STETKAR: Be careful there, because they thought that there was some attempt, at least, in the literature search in the definitions to try to make things orthogonal, wasn't there?

MS. HENDRICKSON: There --

CHAIR STETKAR: At least through the PCs, I thought.

MS. HENDRICKSON: Yes. There is, but, for example, the --

MS. WHALEY: There is an overlap in the mechanisms.

MS. HENDRICKSON: Yes, I guess.

MS. WHALEY: Yes, there is more overlap in the mechanisms, but we did make -- to did attempt to make the proximate causes --

MR. PARRY: Right.

MS. WHALEY: -- as clearly distinct as possible.

CHAIR STETKAR: I mean, there is clear overlap in the PIF, once you get down to the PIFs.

MR. PARRY: Right.

CHAIR STETKAR: There are --

MS. HENDRICKSON: Oh, yes.

CHAIR STETKAR: -- those factors can influence many things. So you certainly -- you can make them as a set as orthogonal as you can --

MR. PARRY: Right.

CHAIR STETKAR: -- but how they influence different mechanisms and different proximate causes, there will be necessarily dependencies there, if you want to consider that. Continue.

MS. HENDRICKSON: Okay. So let me dig

into goal conflict to show a finer example of how this is going to be. So goal conflict here, so now, we are talking about a cognitive mechanism and goal conflict in the psych literature review can be defined as, basically, conflict exists between the goals that the crew has in mind of what they want to achieve.

For example, this is our -- the figure we have shown here is a conflict may exist between the safety of personnel as well versus the continued operation of the plant. It's like between safety and production. However, you may also have a conflict between the operation of two systems.

Now, for example, you have an imbalance of priorities, mainly the crew to choose a response option that is less safe, but it keeps the plant operating. This kind of feeds into the example we were talking earlier, which is saying that the system is going to come back on-line. The system is going to come back on-line. I just need to keep doing this.

And the idea that one of the goals is not to be that crew, right? The crew that got into that mess or the crew that had to do -- that had to go to that stage.

MS. WHALEY: Yes.

MS. HENDRICKSON: The crew is reluctant to

execute a specific response path through the consequences of the action. So they are going to delay doing some action, because it ultimately would actually make the plant inviable, make the plant non-operational in the long-term. So that's where you get into what really goal conflict is.

Then if we look at the relevant PIFs --

MEMBER BROWN: Does this have some relevance to the fact that at Fukushima they didn't start pumping seawater in until it was too late?

MS. HENDRICKSON: I think it's directly relevant.

MEMBER BROWN: That's an example.

CHAIR STETKAR: Clear example.

MS. HENDRICKSON: I think it is directly relevant.

MEMBER BROWN: To keep the plant viable and as opposed to --

CHAIR STETKAR: My example, I just --

MS. HENDRICKSON: As soon as you bring saltwater in --

MEMBER BROWN: You were toast.

CHAIR STETKAR: We in PRA space sit around here saying well, of course, they would go to bleed-and-feed cooling. It's a simple thing. That's -- I

might not want to be the first operator to mess up my containment, especially when my management said if you had only done this, Monday morning quarterback, other thing, you could have saved it.

MEMBER BROWN: Yes.

CHAIR STETKAR: A different way. So there are numerous examples.

MS. HENDRICKSON: That's exactly what we are referring to with goal conflict. Yes, absolutely. So when you look at relevant PIFs, we have listed the ones here just going to a few there in more detail of how really goal conflict may come around to being procedures. You might have complicated levels -- excuse me, complicated logic or the level of specificity for determining the criteria of when you should go to one action versus another, may be inappropriate or it may just be incomplete or just not specific to really know when there is a clear cutoff of when to go to one action versus another.

The perceived decision impact on the plant, the awareness of economic consequences, so always have that awareness in mind. If you are pumping saltwater, you know, you're toast. The plant is ruined. It's not going to happen. Also an awareness of the cleanup costs, an awareness of the

length of the shutdown. All of that then is going to impact the decision and it's going to impact the actions they then take.

We also have listed within, the knowledge, experience, expertise of the operator of the crew, the training, both of these are particularly important if it's a novel situation. So if they just haven't had the exposure to it as much as some of the other situations, they may be -- they may see. And the system responses can, of course, also influence how they proceed. So that's one example of digging down into how you find those relevant PIFs.

MS. WHALEY: And I'm not going to -- we are not going to go into that level of detail for these other trees, just for the sake of time, but for completeness, we did go through the same process for the other proximate causes for decision making.

So for an internal pattern matching, relevant mechanism that we identified is not updating the mental model to reflect the changing state of the system. And again, a point of we need strong justification for excluding things as taken.

And we went through the same thing for incorrect mental simulation or evaluation of options. And we identified the relevant mechanisms and accurate

portrayal of the response to the action or cognitive biases, such as overconfidence in how quickly you can get something done.

MEMBER BROWN: Could you clarify one thing for me? I'm not a HRA, PRA person.

MS. WHALEY: Yes.

MEMBER BROWN: What does pattern matching mean relevant to an individual? I mean, I understand reading meters and watching these type of things or due at start or what have you.

MS. WHALEY: Yes.

MEMBER BROWN: But what do you mean by pattern matching?

MS. WHALEY: It's a mental mapping of I have symptom A, B and C. And this matches this model that I have been trained on or this scenario that I have been through before. I have got, you know, this system out and this level is rising. That pattern matches this other mental model that I am familiar with.

MEMBER BROWN: Yes. Isn't that kind of like incorrect mental simulation?

MS. WHALEY: Mental simulation is playing things out into the future in your mind. So you say if I take this action, what's going to happen next?

MEMBER BROWN: Oh, okay. You are -- okay. So the pattern matching is --

MS. WHALEY: Yes.

MEMBER BROWN: -- at this time --

MS. WHALEY: Yes.

MEMBER BROWN: -- a step as opposed to what may happen in --

MS. WHALEY: Yes.

MEMBER BROWN: -- a subsequent time?

MS. WHALEY: Exactly, yes.

MEMBER BROWN: Is that right?

MS. WHALEY: Yes, yes, exactly.

CHAIR STETKAR: And there have been instances in the past where, you know, A and B and C, therefore, you do X.

MS. WHALEY: Yes.

CHAIR STETKAR: And I see A and B and C prime and maybe rationalize why I see primes close enough to see or different enough that either you don't do X or you do do X when you weren't supposed to do X.

MS. WHALEY: Yes.

CHAIR STETKAR: Okay.

MS. WHALEY: Okay. So to summarize the process, the literature review by looking at the

Appendix A Tables in the cognitive framework structure and looking at that in light of this particular CFM, this is what we found as relevant. And this is what feeds into the decision-trees. We identified the relevant PIFs of knowledge, experience, expertise, training, procedures, system response, the decision impacts, time load, task resources and, you know, that information is then fed into the construction of the decision making. And we --

CHAIR STETKAR: And the task load --

MS. WHALEY: -- hand it back over to Gareth.

DR. XING: Just one comment here now on April's last slide. What you see as the PIFs that we see training, HSI, that's just for presentation to give you a high level overview which PIF action. In the actual analysis, we actually go down further to identify the characteristics in the PIFs.

MS. WHALEY: Yes.

DR. XING: But because those are direct links to the mechanisms, and that's what help with developing the decision-trees.

MS. WHALEY: Yes. It's what about the PIFs are important and how they have an effect on performance.

CHAIR STETKAR: But, I mean, my -- I'll go back to my earlier comments. If I look at the PIFs now that are now cast in stone --

MS. WHALEY: Yes.

CHAIR STETKAR: -- forever, task load is never anything I need to think about in terms of potential factors that may affect delayed implementation.

MS. WHALEY: And that's --

CHAIR STETKAR: Regardless of how it might boil to the surface, it never has a chance to.

MS. WHALEY: And that point is well-taken. So we will look at that.

CHAIR STETKAR: But it's in the --

DR. XING: Yes.

MS. HENDRICKSON: But, in fact, we did put it in the tree, so we have a little -- we have some cleanup we need to do here.

DR. XING: Yes. Also, I think we have to really cleanup this terminology like time load and test load. You know, some literature people can say their time load is one thing they mention of test load.

MS. HENDRICKSON: Yes.

DR. XING: So that's -- in that sense, I

think it will take into account.

CHAIR STETKAR: You know, we're talking again about orthogonality.

DR. XING: Yes, yes.

CHAIR STETKAR: The individual PIFs in principle should be as orthogonal as possible. In practice --

MS. HENDRICKSON: Yes.

CHAIR STETKAR: -- they probably never are orthogonal --

DR. XING: Yes.

CHAIR STETKAR: -- in the time load and task load, as an example.

DR. XING: That's really everything --

MEMBER BROWN: When you say the word orthogonal, do you mean different?

CHAIR STETKAR: Mutually exclusive.

MEMBER BROWN: Mutually exclusive. So okay, I've got that. I've got it. I just wanted to know the context of using the terminology.

CHAIR STETKAR: There used to be some -- everybody always used to talk about a performance shaking factor of stress, you know, that's a catchall term that is certainly not -- it is affected by many, many, many things.

MEMBER BROWN: Yes.

CHAIR STETKAR: And the goal here is, I believe, to get to a set of conditions that you can think about as mutually exclusive as possible.

MEMBER BROWN: Yes.

CHAIR STETKAR: Regarding time for our meeting here, we are scheduled to run until 12:30. My sense is that we will certainly run longer than that.

PARTICIPANT: Not much.

CHAIR STETKAR: Not much? You think you can go through the rest of the stuff --

DR. XING: We're wrapping it up.

CHAIR STETKAR: Okay. Oh, I was just --

MR. PARRY: Really, it depends on how many questions you have, but --

CHAIR STETKAR: I don't have a life. I can be here all day. Don't provoke me.

MR. PARRY: Okay. Okay. So what I'm going to do next I think is give you a general overview of the quantification approach, just to set the scene, and then talk you through a specific decision-tree, the one for delay implementation, which we have constructed based on the analysis that April and Stacey just described.

MEMBER BLEY: Gareth, can you supply a

number and --

MR. PARRY: Oh, yes, sure. This is -- the cover slide is Slide 12 of the second set.

CHAIR STETKAR: Yes.

MEMBER BLEY: Okay.

CHAIR STETKAR: 12 of --

MEMBER BLEY: Thank you.

CHAIR STETKAR: -- Agenda Item 6.

MR. PARRY: Yes.

CHAIR STETKAR: In the upper left corner.

MR. PARRY: The first one I want to talk about is the overview of the quantification approach. Remember what we talked about in the morning, we had a CRT and then we reduced that CRT to the CRT that we would quantify. So the general approach then is for each sequence on that CRT that leads to the HFE and they are identified on the CRT.

You are going to analyze the initial node, the thing that takes you down the first failure, to identify the relevant CFMs. And I give you an example of how I would choose those CFMs for Node 6 on that tree.

The other thing to note about the CRTs is that any node subsequent to the failure on the first one are essentially opportunities to recover. And

that's the way we are going to treat them, as potential for recovery. Exactly how we do that, I'll show you one way that we are doing it right now, but it's not the only way that we could do it.

So then for each of the CFMs that is relevant, we will assess the contribution to the HEP for that HFE. We're doing pretty well with that.

CHAIR STETKAR: You're not doing bad. Good. Keep going, please.

MR. PARRY: And for using it in the decision-tree, I'll use the word as opposed to DT, but we can use DT if you like, and there is one decision-tree for each CFM, as you noted earlier.

The particular path you choose through the decision-tree for a specific HFE is determined by the characteristics of the PIFs that are relevant to that decision node, so that's that failure mode, Crew Failure Mode.

One thing that we haven't said yet, but you may have already gotten on to this, is that the probability that is assigned to each of the decision-tree paths is going to be determined by an expert panel. Okay. So these will be fixed. These are not --

MEMBER BROWN: That's where you get the

numbers?

MR. PARRY: That's where we get the numbers. The reason we wanted to do it this way as opposed to let every analyst come up with his own set of numbers is we feel that if we have the structure correct and we have these numbers set, in stone if you like, then at least we remove that part of the analyst-to-analyst variability.

Where the variability will come in will probably be in the assessment of the PIFs, but as long as they document it, then at least we have a basis for discussion, but we are not going to discuss so why did you choose 6×10^{-3} when somebody else chose 4×10^{-9}, for example, because that's really not -- as we have talked about earlier, we are never going to get the numbers for these that are real in the sense of they can calibrate it to data.

So let's have a group of experts decide on at least the ranges of the values that we are going to have.

MEMBER BROWN: But if you can't calibrate them to data, what good are they?

MR. PARRY: Well, I think they are -- they come under the realm of expert judgment.

MEMBER BROWN: So let me explain that.

Expert judgment says there is a 10^{-4th} probability to do this.

MR. PARRY: Yes.

MEMBER BROWN: And the thought process will either go this way or that way?

MR. PARRY: Right. That's what we do now. Okay? I mean, none of the HRA models that we have currently are based on real data.

MEMBER CORRADINI: You are dealing with people here that aren't practitioners.

MR. PARRY: Okay.

MEMBER CORRADINI: We are just both listening carefully then.

MEMBER BROWN: I would just -- no, the point being is, I mean, you all -- there is simulators all over the place --

MR. PARRY: Yes.

MEMBER BROWN: -- for certain scenarios--

MR. PARRY: Right.

MEMBER BROWN: -- and particular casualties or loss of feedwater procedures, etcetera. And those people train on those.

MR. PARRY: Right.

MEMBER BROWN: And there are stages during those simulations, recognized simulations, where

people make incorrect judgments.

MR. PARRY: Yes.

MEMBER BROWN: So the ability to have obtained a set of data is not outside the realm. You can argue how candid it is, because the scenario sets are relatively fixed for the most part, although the responses during the scenarios aren't necessarily relatively fixed and could go down different paths. So you could have a set -- I don't know how. You know, you can evaluate how good the data is, but it seems to me that data is a lot better than a bunch of people sitting around over a cup of -- no, I don't want to say it that way.

MEMBER CORRADINI: Can I ask a question? The depth --

MEMBER BROWN: You wouldn't do that.

MEMBER CORRADINI: And I know that. What you are dissecting the reasons for a branch point seem deeper than you necessarily would get from a training. I mean, that's my thought. I'm a little --

MR. PARRY: I think you're right.

MEMBER CORRADINI: My thought process is that it will level up a little bit.

MR. PARRY: Yes.

MEMBER CORRADINI: In terms of you are

right onto the Crew Failure Mode level as opposed to down at the DT or whatever the -- what does DT mean again?

MR. PARRY: Decision-tree.

MEMBER BROWN: Decision-tree.

MEMBER CORRADINI: Decision-tree, right, right.

MR. PARRY: But I think you raise a good point, but I think it's -- the issue is the events that we are dealing with in the PRA model, we expect that the probability of failure is very low. Okay? Independently, because that's what the procedure is there to help them do.

So even if you are able to setup a lot of simulator exercises with -- what you would have to do is you have to vary the flavors of those simulations a lot to try and capture the whole spectrum of different circumstances under which those would operate. And to get real data on that is a real challenge. I mean, even to get the simulator time to be able to do anything like that, because the simulators are -- it's prime time.

MEMBER BLEY: Gareth, this is Dennis. May I toss a couple of things in here?

MR. PARRY: Sure.

DR. XING: Yes, Dennis.

MEMBER BLEY: One, and I don't know which of the staff is there today, there is a separate program that is going after the kind of thing Charlie is talking about and gathering data from simulators out at sites. And there is one site participating and maybe others. And for the kind of straightforward scenarios, that may lead us to something kind of useful Charlie. And anyway, it is being pursued diligently.

And whatever we get from that, would certainly be input information for the experts who are dealing with this tree. I just have one concern about the tree and I have mentioned this to Gareth on a previous methodology, so I'll put it on the table here.

I just have trouble seeing this decision-tree as a once and for all by a single group of experts, because the degree of mismatch and the mismatch within a particular scenario can vary quite widely. The same thing with indication on reliability and confirmatory indication, there is significance within a particular context of the scenario. And Robinson, of course, you wanted to bring up again.

It seems hard to do once and for all. And

I just don't quite get my arms around that concept.

MR. PARRY: Okay. I think I have got an answer to that one. And that is that if there are different conditions that are significant to the -- to taking a path through the decision-tree, I would tend to break down the HFE into one or more -- two or more different contributions that reflect those different boundary conditions.

MEMBER BLEY: Then there would be a decision-tree for each type of boundary, I guess?

MR. PARRY: No. I think you would -- not necessarily. I mean, the path would be -- the decision-tree would reflect that if this condition exists that creates these difficulties, then this is the path you follow. Okay?

But the HFE might be one where both of the -- whether the conditions -- it might have subcontext where sometimes the plant conditions were bad and sometimes where they were not. And I think you would have to divide that up.

MEMBER BLEY: Okay. And I --

CHAIR STETKAR: There are, essentially, different HFEs.

MR. PARRY: Become different HFEs.

MEMBER BLEY: An example of this kind of

a key and we are not --

MR. PARRY: Yes. Yes, but I think this is what you would have done in ATHENA, Dennis, with different error-forcing contexts.

MEMBER BLEY: Well, in a general level, seeing how it will actually work here, I just don't quite get it yet.

MR. PARRY: Okay.

MEMBER BLEY: But I think that will come perhaps.

MR. PARRY: Yes, hopefully. Okay.

CHAIR STETKAR: Gareth, part of this I understand you have prequantified decision-trees and I'm an analyst, so I need to assess the goodness or badness of all of the performance influencing factors, such that I know --

MR. PARRY: Yes.

CHAIR STETKAR: -- perhaps after that decision-tree. And I guess I'm hoping you are going to get, I don't know whether you are, to an example to show how one does that. One question I had, because these are little snapshots out of bits and pieces of a model, you made the determination that the Crew Failure Mode of delayed implementation applies to Node 6 in your reduced CRT. I think it might also apply

to, I don't know, Node 4 or Node 8, for example. I'm not sure whether --

MR. PARRY: No, not 8, because Node 8 is purely implementation.

CHAIR STETKAR: Okay. Node --

MR. PARRY: Given that you --

CHAIR STETKAR: -- 4 then maybe.

MR. PARRY: Node 4, I don't even think that.

CHAIR STETKAR: Okay. My question was going to be -- so I'll invent a more general situation where the same Crew Failure Mode might be assessed at different evolution time of the scenario. And it might depend on preceding events and that's okay.

MR. PARRY: That's okay.

CHAIR STETKAR: How do you handle those dependencies though? That if --

MR. PARRY: Okay.

CHAIR STETKAR: -- if this -- you know, if I had the wrong mental --

MR. PARRY: Right.

CHAIR STETKAR: -- image of the way the world worked 15 or 20 minutes ago, how do I understand that my mental image of the way the world worked shouldn't change just because of 15 or 20 minutes,

unless there was some compelling reason to make me change?

MR. PARRY: I think --

CHAIR STETKAR: Well, I'm doing it as a practitioner.

MR. PARRY: Yes. No, I think that's a good question and it relates to your question this morning of, to some extent I think, on how you link CRTs, because I don't think you do. Okay?

CHAIR STETKAR: Yes.

MR. PARRY: This is, okay, not a group opinion. This is my opinion.

CHAIR STETKAR: This is a Subcommittee meeting and --

MR. PARRY: Okay.

CHAIR STETKAR: -- they are all individual opinions.

MR. PARRY: Okay. That's fine.

CHAIR STETKAR: Even the Subcommittee Members, this is not the ACRS.

MR. PARRY: Okay.

MEMBER CORRADINI: But even then we are never sure.

MR. PARRY: The way I think about it is the CRT is a model that helps me get to deciding what

crew failure scenarios are possible. And so all those crew failure scenarios that are possible I include as potential failures of that HFE and they are included in there.

Now, some of those crew failure mechanisms carry with them a mechanism, right? So the way I would do the dependency is to look at the next HFE and see whether any of those mechanisms carry through in the sense of being more likely to cause a failure of the second one, because, as you say, the mental model that they have does not change going into the second event.

I would look at the event and say well, is there something about the conditions here that gets them to change that mental model? So I would -- I think you have to look at it that way, rather than trying to think about it in terms of linking CRTs. That's just --

CHAIR STETKAR: Okay.

MR. PARRY: -- the way I'm looking at it. It's not dissimilar to what I believe MERMOS is doing when it does its dependency.

CHAIR STETKAR: I'm not familiar with MERMOS.

MR. PARRY: No, but I think what they do

is they look at a scenario. They have -- what do they call them in MERMOS?

DR. XING: Targets.

MR. PARRY: Invest seekers, but it's more than that. I think also they call them failure scenarios maybe. And then they would look at how the scenarios from Event 1 play into Event 2. And it seems to me that that's an appropriate way of looking at it, if you have got an idea of what the mechanisms are.

CHAIR STETKAR: That's a little bit -- I mean, you know, in my introduction I said that the sense that I got is that this process, kind of viewing it as an outsider, is you are mapping scenarios into procedures, rather than mapping procedures into scenarios, if you will.

MR. PARRY: Yes.

CHAIR STETKAR: In a sense identifying an entire failure scenario and then assessing procedures against it. Well, the failure scenario may have multiple actions in it.

MR. PARRY: Right, yes.

CHAIR STETKAR: And I think that's a bit of what you were saying.

MR. PARRY: Yes. And I think you have to

think about it in terms -- I mean, since dependence is ultimately based on some sort of causality, you have to understand the causes of the failure in the first one to see how they translate to the second one.

CHAIR STETKAR: Right.

MR. PARRY: And really, we would get down to the level of the cognitive mechanism that is driving it and the PIFs that can change that mechanism.

CHAIR STETKAR: Right.

MR. PARRY: Yes. And the same thing actually occurs --

CHAIR STETKAR: I mean, it occurs -- you know, this example is a good example, because in a typical event tree --

MR. PARRY: Yes.

CHAIR STETKAR: -- you have things like can you restore ultimate feedwater?

MR. PARRY: Right.

CHAIR STETKAR: Can you maybe cross-tie emergency feedwater from another source?

MR. PARRY: Right.

CHAIR STETKAR: Can -- you know, and eventually bleed-and-feed cooling.

MR. PARRY: Right.

CHAIR STETKAR: And there are series and parallel actions in time.

MR. PARRY: Yes.

CHAIR STETKAR: Perhaps, you know, you are operating under the same set of emergency procedures, but it's not just a simple focus do this action within the context of --

MR. PARRY: No.

CHAIR STETKAR: -- one procedure.

MR. PARRY: Right. Let me just backup a little bit. I think what we are trying to do initially, at least, is to develop a method that can be used within the current construct of PRAs. We are not trying to develop a whole new way of doing PRAs. So given that, we have to be able to say deal with the HFE at the time and also deal with a string of them in the context of the PRA scenario and -- by dealing with dependency.

So what we're doing right now, the first step, which is dealing with a single HFE. Some of those same issues though arise even within the same HFE.

CHAIR STETKAR: That's actually the example that I was trying to bring up.

MR. PARRY: Okay.

CHAIR STETKAR: If you had two branch points in your CRT that, for example, were assessed to have the same Crew Failure Mode applied --

MR. PARRY: Yes.

CHAIR STETKAR: -- but because they are different branch points within the same CRT, they represent in some sense different points of the evolution --

MR. PARRY: Right.

CHAIR STETKAR: -- however the CRT models that evolution. There may be dependencies even within that single HFE.

MR. PARRY: Yes.

CHAIR STETKAR: You know, how you quantify this thing.

MR. PARRY: Yes.

CHAIR STETKAR: That depend on the conditions under which that decision-tree, that appropriate decision-tree is evaluated.

MR. PARRY: Right.

CHAIR STETKAR: Given the fact that, you know, this performance influencing factor was rated, you know, bad or what -- however I rate those things in Step No. 1, perhaps it ought to also be bad, you know, in Step No., you know whatever, 12.

MR. PARRY: Yes.

CHAIR STETKAR: Because there is no reason to believe that it shouldn't be. They are fully correlated even within the same construct of the same CRT, which is a single, you know, defined HFE.

MR. PARRY: Vinh?

MR. DANG: As you know, dependency is very important to getting the right answers. And it is something that we are very aware of in the guidance for qualitative analysis to make sure that that comes across that this issue is addressed already at the qualitative analysis point to make these connections and to keep an overview of the entire HFE scenario, such that you first identify it qualitatively.

And then coming to the quantification and decision-trees, it is an item that we are very much aware of and are working to resolve in a practical way. It's --

CHAIR STETKAR: I'll take that as it's a work in progress.

MR. DANG: It is.

DR. XING: Yes.

MR. PARRY: Yes.

MR. DANG: It is a work in progress.

DR. XING: Work in progress.

MR. DANG: And very much the subject of discussion within the team as to the best way to do this. And we will go through these different options, but it is high on our list of things that need to be done and that we consider essential to getting the right results.

MR. PARRY: And the next slide, the one I just put up there, in fact, addresses the issue of dealing with the recovery internally to the CRT, okay, which is based for an HFE. So this is not dependency between two HFEs. It is recovery within the CRT, so within a sequence in the CRT, which comes in the later branches.

And basically, when you look at the recovery, you have to think about a whole bunch of things. First of all, what caused the initial error? Is there new evidence that could change them to say change their mental model? And if it does, do they have a plan for dealing with it? And if that's okay, do they have the time to do it?

So there is a lot of things that need to be brought into account. So we are conscious of dealing with that. And the way we have done it, at least in this initial set of trees, is to include a branch in the decision-trees as is relevant to dealing

with this recovery.

Some of the CFMs we think there is really no chance to recover or at least is already sufficient built in the trees, such as another alarm or something that we needn't worry about, you know, over-loading it with recovery mechanisms.

So it is something that we are seriously thinking about and I think the next step, once we have come through the model for the single HFE and worked all the details out in that, is we will go on to look at dependency between HFEs in the PRA scenario. That's clearly one thing we have to do, because that's an area, as you know, that isn't dealt with very well. And we deal with it in PRAs, but we do it with a sort of crude way, I think. Although, I think sometimes fairly pessimistically. So that's okay.

The next slide. I'm flipping over my slides, but I'm not pressing the button. Okay. The next slide is just basically to present the equation for recovery. It's a double summation, right? It's a summation, first of all, on the inside summation. It's the sum overall of CFMs that are relevant to kick you off on the path that you are interested in.

And then the outer sum is the sum of the different CRT sequences that can lead to the HFE.

CHAIR STETKAR: So although initially you said that the CRT is -- helps you understand things, it is a quantification tool. It's an event tree. The decision-tree to -- it's a branching logic.

MR. PARRY: It's a branching logic.

CHAIR STETKAR: Yes, because you have defined combinations of things that are in and/or logic that you will now sum.

MR. PARRY: You're right. But I think the nice thing about it is is that what you can convert it to though in terms of the model that gives you insights is it can convert you into a sum over crew failure mechanisms or crew failure scenarios, I should say. Crew failure scenarios is what I meant to say in the sense that it says the crew failed because they delayed implementation because of this, that and the other, despite the fact that they knew X and Y.

Okay. All right. So let's talk a little bit about the construction of the decision-trees. As we have said, based on the analysis of the results of the literature search, particularly looking at the cognitive mechanisms and the PIFs, because we translated the PCs and put them in the right place, identified the mechanisms that are relevant in the PIFs that are associated with them.

The intention of constructing these decision-trees is that when you have got the complete set, we, basically, captured the set of crew failure scenarios that we can think of.

Now, there is a conscious decision in drawing these trees where we have a large number, potentially large number of things we call PIFs. So we tend to group them into groups that seem to make sense at a high level. The reason for this is if we are going to go down this path of having an expert panel determine the probabilities of the end points of the paths through the decision-tree, there really is not a lot of point in having trees that have 64 end points, because how are people really going to make the distinction?

We are rapidly going to, I think, exceed the limit of credibility of this thing if we make it too distinct, too fine a distinction. A relatively cross level is probably adequate for most purposes in the PRA, as long as we make sure that we capture the significant influences. So there is a conscious effect -- attempt to make it not incredibly complicated, but to capture the most important things.

MEMBER CORRADINI: Can I ask a question?

MR. PARRY: Sure.

MEMBER CORRADINI: So I think I understood what you said. That makes some sense, because you're not going to overburden the elicit -- the expert elicitation on 64 shades of gray.

MR. PARRY: Right.

MEMBER CORRADINI: But at what level do you -- have you been that you actually can validate it based on data?

CHAIR STETKAR: Over here.

MEMBER CORRADINI: In other words, since you're going through all this effort to bin it up, have you thought about binning it to the point where you actually can get data to validate?

MR. PARRY: That might be so high we can't really validate.

MEMBER CORRADINI: Okay.

MR. PARRY: I think that --

MEMBER CORRADINI: Well, then I'm sorry to sound so out of it. I'm looking for something that would validate it at some level. So I'm using your thought about your taking many shades to a few shades.

MR. PARRY: Yes.

MEMBER CORRADINI: At what level do you need to take it to actually revalidate it based on the Halden or simulators or something.

CHAIR STETKAR: Or whatever.

MR. PARRY: Well, I think that's a really difficult question because basically what you get from those types of exercises are specific examples of scenarios that may or may not have failures in them. Some of them do, some of them don't. It's not -- I don't think we are even close to getting probabilities except for those cases where you can setup the scenario, so that people would almost guarantee it to fail.

So we can probably get data on the high end of these decision-trees where there are a lot of things that are not favorable. We can probably do that. At the lower end where everything is favorable, I don't know, maybe other people have comments, but I don't see how we can use that data.

MEMBER CORRADINI: I'm not an expert. I'm just looking for something to plant a flag next to that actually I have --

DR. XING: Yes.

MEMBER REMPE: I think at some point you said these are very low probability events and that's also why it's difficult to get data. And I guess to even sound also from the other side of the fence and not normally doing this stuff, is it important? Can

you not bin up to --

MR. PARRY: Yes.

MEMBER REMPE: It means it's so important, they are low probability events. It's hard to get the data. Is there not a simplifying approach that could make the process a little bit easier to do?

MR. PARRY: Right.

MEMBER REMPE: And again, I'm out of my field, but I just have been kind of wondering why such a level of detail.

MR. PARRY: Well, I think the reason that you need some of that level of detail is that really what you are trying to look for is those challenges to the crews that -- where they do get issues. And so we are looking for the factors that can drive them to have poor performance, one way or the other.

We hope that for the majority of cases, that the procedures or whatever, their knowledge, is good enough that they will almost always succeed. But remember, some of these events though, some of these operator actions are critical in preventing core damage, so we need them to have long -- low failure probabilities.

So I think we -- I mean, I assume where you are going with this and I think having too much of

a level of discrimination is not good. Having too little is not good. So we are trying to strike a balance somewhere in the middle that captures, I think, the most important things. I don't know if that answers your questions or not.

MEMBER REMPE: I'm just curious and I just had to say it.

CHAIR STETKAR: Jing?

DR. XING: Yes. Just like to make a comment from the project manager perspective. So a couple of questions was related to how are we going to verify or validate data whether the decision-tree covered all the important PIFs, that's one.

And the second part, whether there will be -- the tree will be different for different application scope scenarios, that's number two.

And number three, the HEPs that we planned initially using expert elicitation, how we are going to confirm that.

So this hasn't come to our project yet, but we have began to plan a number of things for this. We expect -- for example, we talked earlier where we look at some event, used existing event to verify a list to trace the PIFs and the trace works for this event gave us the initial confidence.

And also for the data, for the HEP part, the probability part, initially, we like to use the expert elicitation, because that's the easiest way to get some initial number. What we do plan to have a series. James, I'm going to hand this to James on the data project.

MR. CHANG: This is --

DR. XING: That's exactly how we manage to do the verification. Come up, James.

MR. CHANG: This is James Chang, Office of Research, Research Assessments.

As part of the initial of the HEP that focus and we -- this much that we have establish here of original understanding with the South Texas Project who collect their license operation for major training data. And we have been perhaps a year that -- the working group has been developing the method and we looking into that data needs, all agencies, each location including the significant examination process as precursor event and the basic PI model. This was information available in these different applications.

And we have been -- although considered that the data collection and how we can collect data in an effective way that and the cost that we can manage it. So that we have been closely looking at

the SI method trying to bring in the data and the information we collected to mention to support the event that occurred. But, yes, that is the intention we are doing now.

DR. XING: Yes. Thank you, James.

MR. CHANG: Yes.

DR. XING: And also, other than what James said, we also have identified a list of identified resource for the verification. For example, the HRA analysis has been done for air traffic controllers man where they have the human error probability estimation, based on plenty of data that air traffic controller make different errors.

And the Agency, means I myself, have done some work to analyze how we can use the data, to what extent in the different domain to inform us, that's why source of information we are going to look at.

And another source of information is in the literature. Along with the human factor research, like, for example, lots of research done by Department of Defense, they use the simulators. It's in a different setting, but what the data has isolated some performance-shaping factors -- performance influencing factors and that was the only chance of work load or test load to see how that effects the performance

error.

So that gave us another source of information to verify what we are going to get, so based on our consideration. Thank you.

CHAIR STETKAR: Stuart, did you want to add something?

MR. LEWIS: I think the point has been made.

CHAIR STETKAR: Okay. Gareth, one of the concerns that I have, and I'll keep coming back to this, is that you are now talking about, you know, coalescing PIFs and simplifying the decision-tree logic structures.

MR. PARRY: Yes.

CHAIR STETKAR: So it's practicable or smaller anyway. You are doing that within the construct of the work that you have performed so far.

MR. PARRY: Right.

CHAIR STETKAR: Which is, you know, basically the construct of this example or very similar type scenarios. Is there a danger, these decision-trees will very quickly start taking on a life of their own if the project proceeds this way. Given the normal evolution and pressures of project management, decisions that are made about grouping

together performance influencing factors under conditions where we think about very structured specific goal-oriented procedure-driven type event scenarios, could they be different when we start to apply this methodology to other types of conditions? Fires, floods, you know, I'll go back to the Robinson event.

And are we making decisions about coalescing things now because when we coalesce things, you are now telling the practitioner you need to think about these factors, rather than you need to think about five factors. You need to think about the somewhat more amorphous single issue, I think.

Are we precluding or are we telling people to think incorrectly, simply because we are making these decisions now without thinking toward other applications of this methodology?

Because one thing, this is -- I'll come back to -- you know, the SRM is to the ACRS and the staff.

MR. PARRY: Yes.

CHAIR STETKAR: So we are on the hook for it. Not -- you know, we, the Committee, are on the hook for this as much as the staff is and as one of the players in this game, I certainly don't want to

see us getting down the road and saying gee, we really need to rethink this whole thing and undo our decision-trees because we didn't think far enough ahead toward other applications of this methodology, because the methodology and if the decision-trees of the fundamental kind of quantification framework should be able to handle pretty much any kind of scenario that I can throw at it.

MR. PARRY: Yes.

CHAIR STETKAR: And it's the same sense, you know, of throwing out proximate causes and performance influencing factors without really, really good justification, some of the coalescent things -- I recognize the practicalities and not having, you know, 750 slightly different numbers on a single tree.

MR. PARRY: But I think when -- why don't we talk through a specific --

CHAIR STETKAR: Okay, yes.

MR. PARRY: -- decision-tree.

CHAIR STETKAR: Sure.

MR. PARRY: Because that might help go through it, I think.

CHAIR STETKAR: Sure.

MR. PARRY: Because I think what you will find is that we are trying to capture in the structure

of the tree is a pretty fairly high level description of failure scenarios.

CHAIR STETKAR: Okay.

MR. PARRY: And underlying that -- okay, let me go on. Well, this last point on this slide says that when you are applying the decision-tree for a specific HFE, what you are doing is assessing the characteristics of the PIFs or at least the things that try the different paths.

And that has been obtained during the qualitative analysis. But the guidance that we are going to give for that is either in the formal question or sometimes we can write questions, other things we might say that these are the issues that characterize a good versus a bad whatever characteristic this is.

So let me show you the CFM, the decision-tree that we have created for delay implementation. Okay. So I'll just remind you, the crew decides to delay implementation of the action, such that the response is not successful. So it's a decision here.

The failure scenarios that we have come up with for this one is that is one the bleed -- the function that is being addressed can be achieved by recovery of the system is normally used, okay, as

opposed to this action which perhaps is detrimental to the future life of the plant.

And the other one that we put in here was distraction from competing demand. So we have got a couple of scenarios. For Dennis' benefit, this is Slide 17. Sorry, I should have said that.

And for this particular CFM, we don't include any recovery by sort of a cognitive mechanism, if you like. The only recovery we have put in this tree is the -- is an alarm that relates to and now you should really do this. Okay. So it is a final notice, if you like.

So this is the tree that we have created so far. Okay. So the first branch is is the workload high and leading to an incorrect priority that leads them away from this particular one?

MEMBER BROWN: On the previous page, you don't have to go backwards, but just --

MR. PARRY: Okay.

MEMBER BROWN: -- there is no recovery other than the alarm.

MR. PARRY: Right.

MEMBER BROWN: For this CFM the crew knows the correct response, but decided they will delay its initiation?

MR. PARRY: Right.

MEMBER BROWN: Okay. In camp?

MR. PARRY: Right.

MEMBER BROWN: I think my thought just disappeared.

MR. PARRY: That happens to me all the time.

MEMBER BROWN: No, okay. They ignore the alarm? Is that what this means?

MR. PARRY: No, no. Sorry, again --

MEMBER BROWN: You're talking about the alarm --

MR. PARRY: No, on the recovery thing, yes. If they --

MEMBER BROWN: The alarm came and they decided they are going to do something else.

MR. PARRY: Right. Oh, okay.

MEMBER BROWN: That's the way I read it.

MR. PARRY: Yes.

MEMBER BROWN: I knew I would get it right sooner or later.

MR. PARRY: The way the tree is structured, okay, is it's really asking is there an alarm related to the action? Okay. If there is not, you follow the no branch. There is nothing to remind

them, in other words. Then what we would do when we have the experts assess the probabilities for these, is they would say well, what -- I don't want to say that they are going to put numbers on each of the branches. I want them to assess the whole scenario.

But this is a scenario where they have -- let's pick the top one. They have got a high work load and so they have given incorrect priority to this thing, so they decided to delay it.

MEMBER BROWN: Okay. And how does that relate to the alarm again?

MR. PARRY: Well, the alarm --

MEMBER BROWN: A starting point.

MR. PARRY: Okay.

MEMBER BROWN: I'm sorry.

MR. DANG: Can we go back to the previous slide, Gareth, because I think -- there. That's -- back up a moment. I think there is two alarms that we are discussing here. If I understand perhaps your question.

MEMBER BROWN: Ah.

MR. DANG: Let's say you have an initial alarm or indication and you assess that --

MEMBER BROWN: Yes, I know.

MR. DANG: -- and come to the right

situation and assessment.

MEMBER BROWN: Right.

MR. DANG: That's already modeled earlier.

MEMBER BROWN: Yes.

MR. DANG: Now, you have actually reached the decision that you probably need feed-and-bleed. You just have delayed starting that and then while you are in that phase, another alarm comes and this time-- so it's not a question of not assessing correctly an issue. I'll hand it back to you.

MR. PARRY: Yes, you're absolutely right. And I apologize.

MEMBER BROWN: So there was a dependence.

MR. PARRY: I apologize for that.

MR. DANG: Yes.

MEMBER BROWN: There may be dependence there.

CHAIR STETKAR: So there was an initial alarm.

MR. PARRY: The initial alarm might be that they have lost feedwater. Okay. The reactor is tripped. They responded to that. They have done the assessment. Okay. And they realize that they are going to -- they ought to go to feed-and-bleed.

Now, what this alarm would be if there was

an alarm that rang at 600 degrees --

CHAIR STETKAR: This is --

MR. PARRY: -- F that says now do it.

CHAIR STETKAR: This is the alarm. This is the wake-up alarm.

MR. PARRY: It's the wake-up alarm.

CHAIR STETKAR: It says hey, stupid, start feed-and-bleed right now.

MR. PARRY: Yes, right.

CHAIR STETKAR: Do it.

MEMBER BROWN: Is that the one at the end of your chart?

MR. PARRY: Yes, that's the one at the end of the chart, yes.

MEMBER BROWN: So they got a reactor trip. They got an alarm. They know they have got to do something.

MR. PARRY: Right. And up to now, they have done everything just fine. And now, they are saying well, you know, I really don't want to start feed-and-bleed because --

MEMBER BROWN: They are trying to get that back.

CHAIR STETKAR: The 600 degree alarm has not occurred yet?

MR. PARRY: It has not occurred yet. So this is perhaps not a great example, because we have already assumed that they are at 600 degrees F. So let's say it's another alarm that happens at 620 degrees F that -- or whatever, that tells them look, you have had your chance, now, here is your last chance. That -- this is meant to be -- as John said, it's the wake-up alarm for this action.

And there are things like that, I think, that with --

CHAIR STETKAR: There may be.

MR. PARRY: There may be in some plants that --

CHAIR STETKAR: Well, I'm aware of --

MR. PARRY: -- switch over to IRWST, for example.

CHAIR STETKAR: -- one.

MR. PARRY: Right? You will get a low audibly less steam level alarm.

CHAIR STETKAR: I mean, I'm aware of one plant that had, essentially, a klaxon alarm that told them to initiate cool down under certain conditions.

MR. PARRY: Yes.

CHAIR STETKAR: Big brother knew, you know.

MR. PARRY: Right.

CHAIR STETKAR: It was. I mean, it was difficult to ignore that.

MR. PARRY: Yes, it would be. So the -- yes, the answer here is that that alarm is a wake-up alarm and it's a recovery mechanism for this particular failure, if you like.

CHAIR STETKAR: But it has been mentioned there may be -- the problem is that we are dealing within a specific decision-tree.

MR. PARRY: Right.

CHAIR STETKAR: And there may be dependencies on performance influencing factors that we evaluated in different decision-tree way up in the situation assessment part of this whole scenario that affects this thing.

MR. PARRY: Right.

CHAIR STETKAR: And you should be consistent in the way you do that.

MR. PARRY: Right. But that should come out of the qualitative analysis, because if it is an important factor, it should have been -- because the qualitative analysis, remember, is not necessarily being done at the CFM level. It is being done at the level of the whole development of the PRA scenario and

the task analysis.

So I think it is --

CHAIR STETKAR: I just worry about people picking up these things and saying now, today --

MEMBER BROWN: Oh, yes.

CHAIR STETKAR: -- I'm going to go or I am going to go evaluate the decision-tree for delayed implementation, because that's my job.

MEMBER BROWN: Yes.

MR. PARRY: Right.

CHAIR STETKAR: John evaluated the decision-tree for situation assessment, you know, whatever Crew Failure Mode under situation assessment a week and a half ago, because this is a real project.

MR. PARRY: Yes.

CHAIR STETKAR: And, you know, he did a good job on that. I did a good job on this. We didn't realize that we were supposed to talk to one another.

MR. FORESTER: And I think when you are assessing decision-tree, you have already assumed that that's successful. So it doesn't really matter whether you assess in terms of estimated probability of failure for another earlier --

CHAIR STETKAR: Maybe their assess --

MR. FORESTER: -- review of this tree --

CHAIR STETKAR: No. Maybe they were successful for a different reason than -- you know, this branching logic can get awfully complicated.

MR. DANG: So Gareth mentioned these questions that underlie the headers in the decision-tree and I think this is the kind of question. I don't know if you have questions for these particular headers on this decision-tree.

CHAIR STETKAR: I have some.

MR. DANG: But we try to give it such issues, of course.

CHAIR STETKAR: Yes.

MR. DANG: When you say there is an alarm, then you need to ask some questions about that alarm.

CHAIR STETKAR: Right.

MR. DANG: To find out what it is worth.

CHAIR STETKAR: Yes.

MR. DANG: At this point.

CHAIR STETKAR: Let me ask you about this particular decision-tree and I hadn't heard a lot about it. But your first branch point says work load high.

MR. PARRY: Yes.

CHAIR STETKAR: Incorrect priorities. And

I went back through the examples in your handouts here and, you know, for the life of me, I can't find under any of the proximate causes for this particular Crew Failure Mode a PIF that says task load high.

MEMBER BROWN: There is a time load, right?

CHAIR STETKAR: So there is a time load.

MS. WHALEY: Yes, there is a time load.

MS. HENDRICKSON: And this is that area we need to cleanup.

CHAIR STETKAR: The gray area to cleanup.

MR. PARRY: Yes.

CHAIR STETKAR: I'm curious because, you know, I'm hoping that there is a clear path to show how everything coalesces, so that I understand what each of these branch points mean and why they mean what they mean and how they relate back to that underlying much more detailed model.

MR. PARRY: Yes.

MEMBER BROWN: And this isn't something that somebody drew that seemed to make a lot of sense and you sort of rationalized how things could fall into this.

DR. XING: Yes.

MR. PARRY: Right. Let me tell you where

we are at right now. We have a set of decision-trees, initial ones, and discussion of the branch points for all of them except the action ones currently.

When we completed them, what we need to do is we need to take them all as a group and make sure that we have got everything covered and make sure it is consistent, first of all, with the CFMs they are orthogonal and that we have got the right stuff in here, that we have captured all the failures, crew failure scenarios that we can think of, given the knowledge we know from the literature survey.

So that's where we are at.

MEMBER BROWN: There was under incorrect prioritization of goals, there was a task load that was not highlighted. It was on Slide 6.

MS. WHALEY: Yes. And that was one --

MEMBER BROWN: And we asked -- John asked that question earlier.

MR. PARRY: Yes.

MEMBER BROWN: Now, they said earlier that this was sort of -- they are not quite clear about task load and time load. So I can accept for the moment that this is sort of a time load sort of kinda thing.

MS. WHALEY: Well, this task load also,

the only PC that we went through was that one task load here, it was probably highlighted in one of the other proximate causes. But if it's not --

MEMBER BROWN: It is?

MS. HENDRICKSON: Yes, it may be. But like you said, there is definitely some cleanup.

MEMBER BROWN: Well, this is delay implementation, so, I mean, if it was right at this --

CHAIR STETKAR: I'm pretty good about checking things. I'm assuming you highlighted only the things that are included in here and in the three proximate causes.

MS. HENDRICKSON: In those three proximate causes.

CHAIR STETKAR: This is retain mechanisms, the task load was not highlighted.

MS. HENDRICKSON: Okay. Yes, that's definitely something we need to cleanup.

MR. PARRY: Yes, putting it under resources actually, because it's one of the things that would affect the --

CHAIR STETKAR: That's okay. The message here isn't specifically the --

MR. PARRY: Yes, right.

CHAIR STETKAR: -- this example. The

message is since these decisions --

MR. PARRY: No, no.

CHAIR STETKAR: -- are the key --

MS. HENDRICKSON: But we fully intend --

CHAIR STETKAR: -- for initial quantification, they need to be traceable all the way back to that fundamental concept.

MS. HENDRICKSON: Exactly. And that's what we fully intend to be able to show it through --

CHAIR STETKAR: They will be cast in stone.

MS. HENDRICKSON: -- the proximate causes through the cognitive mechanisms all the way down to the PIFs. There will be a clear highlighting shown.

CHAIR STETKAR: And the structure of those questions that -- are you going to get to a couple questions?

MR. PARRY: No. I decided not to put those, because --

CHAIR STETKAR: Okay.

MR. PARRY: -- that would be quite --

CHAIR STETKAR: But I was going to say, the other part of the issue, from my perspective, is the structure of those questions needs to be very, very, very carefully crafted.

MEMBER BROWN: Yes.

CHAIR STETKAR: I mean, very carefully crafted.

MR. PARRY: Right.

CHAIR STETKAR: Because those are the things that people will pick those up and say I need to answer these questions.

MR. PARRY: Yes.

CHAIR STETKAR: That's all I need to answer. I don't need to think about anything more. But they are practitioners because this is now becoming quite an involved practical application process. And people will just pick this up and they will answer the questions.

MS. HENDRICKSON: Yes.

CHAIR STETKAR: And if the questions are not well-structured to make them think about the fundamental performance influencing factors that can affect that decision, it's bad.

MR. PARRY: Yes, and I wouldn't necessarily want to mislead you by saying that there are always going to be questions. There could be a list of issues that need to be considered and the reason why they need to be considered in determining the branch points.

CHAIR STETKAR: Yes. They are equivalent.

MR. PARRY: Yes.

CHAIR STETKAR: Regardless to how they are cast.

MR. PARRY: Yes, I think you -- I mean, I agree with you. I think that's part of the real challenge of this. And it has to be related to the environment that we are talking about, which is the nuclear power plant operations.

CHAIR STETKAR: Gareth, let me ask you since we are getting close to the end here and we're going to run over probably until 1:15.

MEMBER BROWN: We are?

CHAIR STETKAR: Let's just plan on that. I gave you a choice at about 12:00. I gave you a brief opportunity to say hey, let's take a break. Nobody bit. We are going.

Pragmatically, in the quantification process --

MR. PARRY: Yes.

CHAIR STETKAR: -- if, indeed, the branch points in this tree -- I mean, the practice will be people will go through an exercise and essentially settle on one sequence in this tree. Is that correct?

MR. PARRY: Yes.

CHAIR STETKAR: For a particular --

MR. PARRY: For a particular HFE.

CHAIR STETKAR: Or --

MR. PARRY: Right.

CHAIR STETKAR: -- a particular branch point in a CRT.

MR. PARRY: Right, right.

CHAIR STETKAR: Or whatever. And that sequence will have --

MR. PARRY: That will be --

CHAIR STETKAR: -- a number.

MR. PARRY: Right.

CHAIR STETKAR: Suppose I do my analysis and I have, you know, infinite resources and the smartest people in the world and I come to the conclusion that my answer is about 67 percent yes and about 33 percent no. In other words, this tree in the guidance so far is specifically bimodal pass fail --

MR. PARRY: Yes.

CHAIR STETKAR: -- thought process.

MR. PARRY: Yes.

CHAIR STETKAR: But does it allow for uncertainty in the sense -- because we are now asking people to subjectively somehow assess the quality of performance influencing factors, I think --

MR. PARRY: Yes.

CHAIR STETKAR: -- through either some sort of structured question and answer process or hey, go think about these issues. In some cases, it might not be a clear pass --

MR. PARRY: Right.

CHAIR STETKAR: -- up or down.

MR. PARRY: Right. I think that's a valid concern. And I think if that situation were to happen, probably what I would recommend, at least, is that well, you try it both ways and see whether that affects whatever answer you -- affects any conclusions or insights that you are drawing from this.

CHAIR STETKAR: Part of where I'm going to is I haven't yet seen the word, and I have to be careful here, because I haven't read every word in all the reports, but it's really hard to find the word uncertainty.

MR. PARRY: You're probably right.

CHAIR STETKAR: And one source of uncertainty --

MR. PARRY: Yes.

CHAIR STETKAR: -- can be in terms of -- not only uncertainty in the numbers that hang on the end of each sequence --

MR. PARRY: Right.

CHAIR STETKAR: -- because, obviously, they should have uncertainty, but in the analyst assessments of --

MR. PARRY: Right.

CHAIR STETKAR: -- especially if they are a coalesced set of things, it may not be a clear cut pass fail, up down. It may be a 73rd which -- and there is nothing wrong with that, if you document, you know, we have confidence of 70 percent being on the up branch, 30 percent on the low branch. I can multiply. This could be our -- you know, multiply factors times distributions and add them together as well as anybody.

MR. PARRY: Yes.

CHAIR STETKAR: It's --

MR. PARRY: I think you are essentially pointing out that there could be modeling assumptions that people make that they are not actually sure about. So they could decide to go ahead --

CHAIR STETKAR: It isn't in the modeling assumptions. Isn't the -- when I -- maybe I don't understand the process well enough. When I, as an analyst, pick up the decision-tree --

MR. PARRY: Yes.

CHAIR STETKAR: -- within the context of--

MR. PARRY: Yes. You have to model the decision, which would --

CHAIR STETKAR: I have -- well, based though, I hope, some sort of structure evaluation of the underlying performance influencing factors --

MR. PARRY: Right.

CHAIR STETKAR: -- that affect each of those branch points.

MR. PARRY: Yes.

CHAIR STETKAR: And ask, you know, are my procedures perfect or are my procedures lousy.

MR. PARRY: Yes.

CHAIR STETKAR: For example.

MR. PARRY: Yes.

CHAIR STETKAR: It's just simple. Well, maybe for this particular condition, I think my procedures are fairly good, but, you know, I can't say they are perfect. I can't say they are absolutely imperfect.

MR. PARRY: We thought about this, too, and we thought that one of the ways of doing this would be to perhaps ask that the assessment be very -- if you are going to assess that their action is down, which means good, and you have to be very confident of

it, if you are not confident of it, then at least initially go on the up branch.

MR. DANG: Right.

MR. PARRY: I think that's --

MR. DANG: When in doubt, up.

MR. PARRY: Yes. That's --

MR. DANG: I mean --

MR. PARRY: -- the plan that we have for this.

CHAIR STETKAR: Okay.

MR. PARRY: So if you --

CHAIR STETKAR: So you do that and all my HEPs come out 1.0, we have had, you know, that experience. And now people go back and say I really don't like the fact that HEPs of 1.0 are going to melt my core, so I want HEPs of 10^{-6} and I want to somehow get to that up branch. But in truth, I can't say that I am 100 percent confident that, you know, the up branch applies.

MR. PARRY: Do you mean the up branch or the down branch?

CHAIR STETKAR: I'm sorry, the down branch.

MR. PARRY: Down branch. Yes. I mean --

CHAIR STETKAR: Down is good in this tree.

By the way, is there any fundamental reason why you made down good?

MR. PARRY: So the numbers go from 1 to nothing. Not really.

MR. DANG: But we can flip the questions if you --

DR. XING: Yes.

CHAIR STETKAR: Whatever. I mean, but you see the problem? Because people -- if that's the initial guidance, I mean, that's sort of the kind of screening approach and, you know, we are not certain and err in the direction of conservatism, but people will go play games with this or there might be honest differences of people doing the best analysis at, you know, the factors under the scenario of conditions that I'm dealing with here, I'm not willing to say that it is absolutely down or absolutely up.

MR. PARRY: Yes.

CHAIR STETKAR: Can the methodology handle it? I mean, obviously, it could, but will it?

MR. DANG: We had discussed this at length this whole issue of binary branches and define this and the number of leaves on the tree. And I think for the time being, the answer is we have to live with this conservatism and ensure that you don't get all

the -- you know, forced to go up all the time and get to 1 all the time. We know that is not acceptable.

Now, there are mathematical ways to deal with splitting the branches that would not require, you know, 64 question experts to elicit more of these. But that's clear out of the scope of what we can manage within the schedule. There would be -- I mean, we have to finish this and see whether or not you can get reasonable answers, because what you would want to do is force them to get high values when it is appropriate.

MR. PARRY: Right.

MR. DANG: And the rest of the time, they can -- you can -- they can get some of the lower values. We don't want to make this too radical and always forcing to 1, that's clear.

CHAIR STETKAR: Right. But you don't want to implicitly force people to game the system by saying that well, I'm about 52 percent that it ought to be down about 48 percent that it ought to be up, so nah, that's good enough, I'm going to put it down, because that gives me four is the magnitude some how.

MR. DANG: Exactly.

MEMBER BROWN: Yes, that's the other danger.

MR. DANG: Yes, we are very sensitive to that issue.

CHAIR STETKAR: Yes, I know.

MR. PARRY: I wouldn't want to see people use it that way either. I think if they have genuine uncertainty, I would prefer to see them -- I mean, for the majority of HFEs, I think they are going to -- the default is going to be going low on the trees simply because we've got good procedures. We've got well-trained operators who clearly define the situations in PRA scenarios anyway.

So there will be a few cases where that is not the case. And usually they probably are relating to somewhat unusual scenarios that perhaps we haven't even modeled yet, but we have to include in the model to amend things. So I don't think it is -- I don't think I see people getting 1.0 everywhere. What I would see though if they had -- if they weren't sure which way to go, I think it would behoove them to do it both ways and see whether it affects anything that is relevant, that's significant to the -- to either the decision they are making or the insights again from the PRAs.

CHAIR STETKAR: Well, you wouldn't have high probability and weigh both outcomes

appropriately.

MR. PARRY: I personally don't like that. I don't think it -- I mean, that's some people like it. I don't. I don't think it buys you anything. It hides stuff. It reaches out saying that things are probably not -- shouldn't be averaged out.

And actually if their order of magnitude is different, we just need -- all you are going to do is to multiple one of them by five, say, which doesn't get you anywhere anyway.

Okay. Well, I don't want to -- obviously, we can't talk about this in detail.

CHAIR STETKAR: Right.

MR. PARRY: I didn't plan to. I just wanted to give you an idea of what it looked like and to let you know that there is a whole discussion on how you choose which way to go on that.

CHAIR STETKAR: Okay.

MR. PARRY: So quickly walking through, this is the reduced CRT and the path highlighted which is the path that we have chosen to use, if you like.

So we had a list of the CFMs that were relevant to Node 6. We talked about that. The only thing I wanted to address with this particular slide is to look at the potential for recovery. Okay. We

have said we've got four, remember we have four CFMs that apply to this node. We have assessed the PIFs for those and we choose the right path.

What about the potential for recovery? Well, for the -- for delaying implementation, Node 12, which is the operator rates, why would that help, because they have already decided. They know what they want to do. They just are not going to --

CHAIR STETKAR: Not going to do it now.

MR. PARRY: No. And the -- two of the other CFMs that were relevant here was the critical data dismissed or discounted or sorry, one of the ones was critical data dismissed or discounted. Now, the interesting thing about this is if this is a credible failure mode here, then the potential recovery from that are Node 6 and 12. It's the same cues.

CHAIR STETKAR: There you would handle that dependency --

MR. PARRY: There that dependency, sorry.

CHAIR STETKAR: -- directly.

MR. PARRY: Yes. You would say that the likelihood of recovery using those is small. So it would be in the initial failure that would kill you, effectively. So that's the only thing I think we meant to illustrate with that. Obviously, we don't

have numbers yet, so we can't provide you with that fake HEP for this thing.

But in summary, the way we have envisioned this is that the quantification model is basically a set of decision-trees. I think the -- if you look at the decision-trees, as a whole, what they should represent is a model of human performance in this environment. Okay. You have all the different types of crew failure scenarios and all the different factors that are going to affect that.

So once you have got that model and we decide that we accept it, I think the structure of the model itself will be useful not only for calculating HEPs, but I think it would be if you turned it around on its head, you can also use it to give you guidance on what to look for in terms of error-forcing contexts that you might want to investigate and possibly have explicitly in your PRA model.

So with that, I think that --

MS. WHALEY: There's one more slide.

MR. PARRY: Is there one more? Oh, yes, there is one more slide. Could we have your feedback? Okay. Not a question we need to ask.

MEMBER BLEY: This is Dennis.

CHAIR STETKAR: Yes, let's -- Dennis,

since you are on the end of the table.

MEMBER BLEY: Way back in the beginning, Vinh said something that I wanted to come back to before we quit. And I think what he said was that we don't need a laid out process as far as this method to decide within a PRA what are the HFEs that we need to quantify, that there is enough information already here to allow that to rise to the surface or something like that.

I may have misinterpreted it. And I was hoping before we were done that we don't just say get back to SHARP1 or IPISA, but we include in here the process for developing the HFEs, because I agree with John's first statement that that is a source of wide variability.

MR. DANG: Okay. I'm not sure I said the words you said. At least, I would not rephrase them in that way. I think you are right that the identification of the HFEs is an important thing to address. However, it is pretty clearly outside the scope of what we were asked to do at this stage.

CHAIR STETKAR: Yes.

MR. DANG: Identification of HFEs and --

MEMBER BLEY: Well, that might be, but I don't think it's outside of the scope of the SRM. I

would like to understand why it is.

CHAIR STETKAR: Yes, why is it outside the scope of the SRM? The SRM says develop, essentially, a consensus methodology for performing HRA to reduce variability.

MEMBER BROWN: I thought it was a model.

CHAIR STETKAR: Well --

MEMBER BROWN: Human reliability models.

MR. PARRY: See, that's definitely -- that seems to imply it's the quantification model.

CHAIR STETKAR: Yes, actually, Dennis, it says "Work with the staff and external stakeholders to evaluate the different human reliability models in an effort to propose a single model for the Agency to use or guidance on which model or models should be used in specific circumstances."

Now, the question is what is a model? And in my mind --

MEMBER BLEY: Regardless of the details of such arcane discussion --

CHAIR STETKAR: Yes.

MEMBER BLEY: -- if this method doesn't address how you develop these or at least point strongly to how you determine that, I don't think it will be -- it will be missing the node for the new

reactors.

CHAIR STETKAR: Yes.

MEMBER BLEY: Just to be clear.

CHAIR STETKAR: Well, and, Dennis, I'll give my comments at the end, because I usually do that, but, at the moment, I complete echo them, Dennis' comments. If the model is everything, including the definition of the HFE, and if this methodology doesn't provide some guidance or at least endorse fully accepted guidance in some other document, which is not SHARP1, I think it has come up short.

And, you know, because the ACRS is part of this, I think you are getting some feedback.

MR. DANG: I think what we will produce will be useful in the situation with PRA analysis process. But developing a set of guidance for the accident sequence analysis, that goes beyond what is already described in good practices in terms of how HFEs are identified at a first cut, I mean, because this qualitative analysis that we do and the framework that we use to do that qualitative analysis will feed back into the HFE definitions.

In that sense, it will help the HFE definition process. But going back all the way and

say okay, now, we have an initiating event, we need guidance to identify the HFEs, well, we can certainly point to the existing practices that would be useful and fun. But my interpretation is that that would be a fair amount of new work compared to what we have been trying.

MR. PARRY: Yes. I think I would also like to go back to at least my recollection of the beginnings of this, it was Commissioner Apostolakis or George, as he was then, and he basically was saying why do we have THERP? Why do we have SPAR-H? Why do we have something else? Why don't we just have one model?

That is more like a discussion of a quantitative model.

CHAIR STETKAR: You know, Gareth, that might have been true in 2006 or '05 or, you know, whatever led up the SRM. That was before the benchmark studies. That was before we have learned -- you know, there are strong statements in both of these reports saying that differences in the qualitative analysis and the definition of the HFEs were an important factor that led to variability in -- or in the qualitative analysis, I guess you were given HFEs.

But the qualitative analysis were an

important factor that led to variability.

MR. PARRY: Right, right.

CHAIR STETKAR: And part of that qualitative analysis is, indeed, the definition of not only the prime HFE that you want to look at, but variance that you might develop through the qualitative analysis.

MR. DANG: I would not exclude the variance, but that's why, you know, in my initial figure, that was a greater transition from the accident sequence analysis with HFE definitions down to the qualitative analysis. I'm sorry I didn't put, you know, the arrows for the iterations, but that's pretty clear and I think we could see that, you know, part of the guidance for the qualitative analysis is hey, when you are in this situation and this is an important variance, then you may want to split this out into a different HFE or make a decision about which one is a limiting case.

That kind of guidance certainly belongs in the scope of what we are doing.

CHAIR STETKAR: Since we are talking about this, let me strongly recommend, if you haven't, I know of at least one person in this room has, reading the qualitative guidance section in NUREG-1921 draft.

It's pretty good. I'm surprised quite honestly that it wasn't just copied and pasted into this document.

I'm also surprised that this document doesn't have any discussion in the qualitative analysis about feasibility assessment, which is an important part of HRA, which is also addressed in that NUREG.

Remember, we are not doing HRA for fire, for seismic, for shutdown, flooding, for full-power, flooding for level 2, for level 3, we are doing HRA for people. So this document doesn't talk at all about in the qualitative analysis even assessing the feasibility of any of these actions.

Now, I guess it is presumed that that analysis has already been done.

MR. PARRY: Yes.

MR. DANG: No.

CHAIR STETKAR: Well, yes or no?

MR. PARRY: No. Given that we have got HFEs given to us in the PRA model, you wouldn't put an HFE into it unless it was -- unless the action was considered to be feasible. So that's, I think, the reason we didn't discuss feasibility was that we assumed that these HFEs were feasible, because they had been defined as being feasible.

MR. DANG: Well, there is feasibility --

CHAIR STETKAR: What about the variations that Vinh talks about?

MR. DANG: -- and feasibility.

MR. PARRY: Right.

CHAIR STETKAR: When you identify a new one, because your sudden revelation is your -- as you are doing the qualitative assessment, there is no discussion about, you know, even benchmarking the fact that that new variant is feasible.

MR. DANG: And I think, I mean, there is feasibility and feasibility.

CHAIR STETKAR: Yes.

MR. DANG: It's clear that the qualitative analysis may reveal that following the procedures will take far too long and, in essence, make it guaranteed to fail in feasible in time.

MR. PARRY: Actually, then the initial PRA was incorrect.

MR. DANG: But, yes, the initial PRA made the finding and it turns out it's practically from an HRA point of view, you cannot assign anything except for 1 or close to 1. It is pass fail.

CHAIR STETKAR: or a variant.

MR. DANG: Or a variant, right.

CHAIR STETKAR: I think in this context that perhaps you have done the appropriate due diligence on what you thought was the universe of the HFE, but as you go through the process here, that you decline that gee, under certain circumstances I really need to define, you know, an HFE pot with a variant on it. That I need t quantify separately.

MR. PARRY: And that's likely to come from different plant conditions, right?

MR. DANG: It could come.

CHAIR STETKAR: I don't know.

MR. PARRY: Almost certainly it will.

CHAIR STETKAR: But anyway, regardless, I recommend that you look at, for a variety of reasons, No. 1. I personally think, again this is me personal, this is not the ACRS. We are having a meeting on 19, 21 March?

MEMBER BROWN: February.

CHAIR STETKAR: February. Soon. Hopefully, February, writing a letter on it at that time. But for one reason, the technical content for that document is not bad, in my opinion.

No. 2, you know, this work is being done by NRC Research in 2012 dealing with HRA. And there should be a rather strong incentive to not having sort

of two camps of a way to think about doing qualitative analysis, for example. And I'll just leave it there.

MR. DANG: I think --

CHAIR STETKAR: John?

MR. FORESTER: Yes.

CHAIR STETKAR: I want to hear you. You were the no.

MR. FORESTER: Well, because it's -- buried in this document, there is a list of items that we really haven't completed yet. And part of that, there is definitely one in there about assessment feasibility, because even if you assume, because HFE is in the model, that it is going to be feasible, you certainly want to look at the time available. It's going to become an issue, at some point, so that process needs to be gone through, so you need a good sense of the time available, the time required and that's part of assessing feasibility.

And I think the point is in the fire contexture adding new fire events to existing models quite often, so you do have a more direct need to reassess -- to assess feasibility for the new actions or change context because of the existence of the fire.

And again, even in the Level 1 full-power

type of situation, as they just described, context can vary if you begin to identify, you know, what -- in ATHENA, we called it the air-forcing context or deviation scenarios where you -- there is some reasonable possibility that the scenario could evolve in a separate way and change the feasibility action. And you need to look at that.

CHAIR STETKAR: I think that is good. Dennis, if you are still there, do you have anything else kind of in a wrap-up?

MEMBER BLEY: Not really. I really appreciated the walk-through of all this today. It clarified things that weren't easy to follow in the new report. So I found it very helpful. And I think, too, the integration on that last discussion, I suspect whenever we get around to writing the letter, those issues will come up again.

CHAIR STETKAR: Yes. I wanted -- what I want to do here is go around the table and get all of the Members kind of final comments and input. And then we do need to talk a little bit about schedules and going forward.

So, Dennis, if you don't have anything more in terms of technical input, Joy?

MEMBER BLEY: No, I don't.

MEMBER REMPE: Okay. Again, you and Dennis are the experts at this, not me, but I guess I'm still kind of -- I understand why -- what motivated the reason for doing this work, but if you can't validate it, I guess I'm wondering about is it appropriate? And it's just a question maybe.

CHAIR STETKAR: Okay. Any reaction? I mean, I can give you a little bit of my reaction. First is implication would be that anything that is being done now can be validated, which is not true.

MR. PARRY: Right.

MEMBER REMPE: Anything in the HRA --

CHAIR STETKAR: HRA.

MEMBER REMPE: -- area?

CHAIR STETKAR: Right.

MR. PARRY: Right. I would agree with that.

MR. DANG: But we have parts and experience for validating parts of the HRA. And I think that the framework we are setting up is amenable. It's not impossible to validate. It's just -- I mean, that would befall on work or something like that. I'm -- it's -- I think the point I want to make is we are not saying it's impossible to validate. Just which parts and in which time frame and with what

level of effort is another question.

CHAIR STETKAR: I honestly think that in terms of validation, there are kind of two parts of the validation. Everybody always focuses on the numbers, but I think that something that we discussed earlier this morning in the notion of will this methodology develop? Will a user of the methodology a practitioner, develop the correct set of proximate causes and performance influencing factors that were identified as the root causes for known human errors?

That's a qualitative evaluation, that it's quantitative, but at least running through the logic process, will the qualitative analyses point you at the right causes? That's really, really important. Because if it doesn't do that, it doesn't do anything. And I think some examples taking, you know, real-world human errors for which we have reasonable documentation, and doing that exercise would be very, very important in terms of confidence building for the overall methodology, accepting kind of the logical constructs and the formalism and whatever assumptions have been made in terms of coalescing things and organizing things and all of that stuff.

So I think that's essential. The numbers, I'll grant you, you certainly could try to run a few

numbers through with whatever limited data are available, which, you know, may evolve out of the ongoing projects. But they will be for, you know by definition, fairly high failure rates under artificially constructed scenarios.

MR. PARRY: Right.

CHAIR STETKAR: You know, given that limitation, you should be -- at least be able to come somewhere in the ballpark of that observation. That's not very useful to validate a 4×10^{-5} human error probability.

MR. PARRY: Right.

MEMBER REMPE: Inclusion of a real-world example would be nice to see.

DR. XING: Yes.

CHAIR STETKAR: Well, I mean, the problem is in the real-world people either did not fail or they did fail. They didn't not fail the probability of --

MEMBER REMPE: For what reasons? I mean, because you can have --

CHAIR STETKAR: No, the reasons are important.

MEMBER REMPE: Yes. You can dig, yes, yes.

CHAIR STETKAR: I think that's, in my mind, the most important part of this validation task is looking at application of the methodology to, essentially, reproduce the root causes for things that we have seen happen. Because if it can't do that, you don't have a lot of confidence in terms of the eventual justification of fake HEPs.

MR. PARRY: Right.

MEMBER BLEY: John, it's Dennis. I would like to get in a work whenever there is a break.

MEMBER REMPE: There's a break.

CHAIR STETKAR: There's silence now.

MEMBER BLEY: It sounds like there is a break. I think the validation issue is complex. And I would remind all our Members of the Halden Study and the follow-on U.S. Benchmark. And I'm not sure that the Committee has been briefed on that yet.

CHAIR STETKAR: No.

MEMBER BLEY: But from the things that worked well in those, the conclusions of what worked well and why it worked well are things that are being rolled into this new methodology. And while it -- I almost said as long as it's not like a physical system where you run an experiment and you have got a number for all. If we look at some of the stuff on the

strainers, you know, that's no worse then what we are seeing here.

And we keep learning. But there is a lot of areas in all of this that are complicated and are linked tightly to reproducible results. The whole thing, and as you said in others, can get down to the numbers, it depends on whether they are real-rare things or real-likely things. And some of that you get some pretty good indication from the papers that have been published out of the benchmark studies that are pretty helpful there.

So, you know, it's -- I would say it's not as bad as some of the answers seem to imply, but it's not as good as we would prefer.

MR. FORESTER: Yes. I guess I would like to add something to that, too.

CHAIR STETKAR: John?

MR. FORESTER: I really agree with Dennis, because the empirical studies, a lot of what they did, they told us where the gaps were and we're responding to those findings that this -- we know these are areas where the HRA need to be improved, just through the logic of testing the applications and so forth.

So we have learned a lot from those empirical studies and we can now prove HRA or take

steps that we hope improve HRA based on our learning from that. The additional validation verification is just going to be an iterative process. Again, you know, you will be looking at testing -- looking at methods and seeing how well they do in different situations.

If you look at the simulator exercises where you try to analyze existing events, you know, presumably without knowledge about the outcomes from the people doing the analysis, so there is a lot of different approaches you can take to iterate -- to validation. That's a very iterative kind of thing and very time consuming, so it never really ends, I don't think.

CHAIR STETKAR: John, just out of curiosity, John, what's the status of the reports on those? Is the Halden stuff done?

MR. FORESTER: We have three reports that are done now and the Halden is on the model study. We are working on the final report and should have that wrapped up, at least a solid draft, in the next month or so.

CHAIR STETKAR: Okay. What about for --

MR. FORESTER: At least for the Halden study.

CHAIR STETKAR: That's the Halden. So that's sort of an overall summary of all the results from all studies. What about the U.S., is that --

MR. FORESTER: We have a draft report that is not complete yet. We had a workshop last summer where we presented the results, initial results and the iterated with the HRA Teams and other contributors. So we are, essentially, working on that final report now.

We are trying to make sure we've done all the analysis we can with the available funds, because there is always a lot of different things you could look at. But, yes, we have a draft report and we're looking forward to completing.

CHAIR STETKAR: I'm thinking about it, because Joy brought it up, Mike brought it up, Charlie brought it up, this issue of validation and what knowledge base is essentially available to support some validation, either qualitative or quantitative as an important issue.

We -- I believe -- I can't remember the date. Dennis, maybe you do. I think a couple of years ago, maybe a year and a half, we did have a very short presentation on the Halden work, but it was, you know, pretty preliminary at that time.

MEMBER BLEY: We did.

CHAIR STETKAR: It might be worthwhile the next time we get together to kind of schedule a presentation, at least on Halden, if it's in reasonably presentable form at that time. And whatever -- if there is any, you know, surprising insights that is coming out of the U.S. stuff, even if it's preliminary, that would be interesting also.

So we may want to think about that the next time we get together. Joy, anything else?

MEMBER REMPE: I'm done.

CHAIR STETKAR: Charlie?

MEMBER BROWN: Well, I don't want to mouse-milk, since I participated in this other exercise on validation and using data, but the only other thought I had to add to that was you've got a bunch of questions that you used as part of your decision-trees and I don't know how those questions were developed. Wrong thought process, didn't decide to do such and such on that last example when you walked through the questions.

And the expert elicitation that you go through has to have a set of questions that are useful in order to make the assessments if you are going to make assessments on quantitative factors. And it

would seem to me that the operating experience and/or simulation responses, things you find people didn't do or the reasons why they made mistakes during their exercises would be useful in terms of having that available for the expert elicitation folks to be expert about to have them at least have a framework within which to develop some of the questions.

Again, I'm not a PRA or HRA person. I like the front end load part of the process, because I think it develops a structure for assessing the ability of people to take actions to mitigate certain casualties or actions that may have to be taken under nasty scenarios.

I have, obviously, some skepticism on numbers being applied to any of it, but that's for the -- that's a personal belief and that's for the Committee to make the final assessment on how they want to deal with that, so I'll stop there. Thank you, John.

CHAIR STETKAR: Thanks. Good point.

MR. FORESTER: Yes, I would like to say, you know, correct numbers are a good thing, but certainly appropriate arrangements just was --

MEMBER BROWN: Yes, relative stuff.

MR. FORESTER: You know, you get that and

you're doing pretty well.

MEMBER BROWN: Yes.

MR. FORESTER: You want the numbers as right as possible, but certainly you can get correct rankings from HRA.

MEMBER BROWN: That's it, John. Thank you.

CHAIR STETKAR: And I've only got a couple. I think we have covered most of mine. I'll just reiterate the cautions. I echo Dennis, obviously, on the qualitative analysis and some discussion with defining the HFEs. Something I mentioned I would like to reiterate is that decisions are being made to screen out proximate causes, mechanisms, performance influencing factors to coalesce things in the decision-tree structure, the decision-tree branching logic, based on the current kind of state-of-knowledge of the project team, which is focused on single event-driven procedure-related full-power kind of events.

And this methodology should be applicable to a much broader range of things. And my only concern is think carefully about those decisions, because once they are made, it will either be very, very difficult to undo them or people might not even

think about undoing them because they were made.

And, you know, I think we are all -- we would have failure if you have a methodology that somebody tries to apply for, you know, fire -- seismically-induced fire events during shutdown. And I'm not making that up, because there is an issue about addressing seismically-induced fires.

And the full scope PRA, Level 3 PRA will cover shutdown issues where people have said oh, we have to redo this entire methodology because we can't handle these things within this construct. So just be careful about that. Be really careful about that.

And I'll bring up something I said earlier, there is no mention of uncertainty here at all. And there may be many sources of uncertainty and there may be ways to insert guidance about how to think about quantifying uncertainty throughout this process without fundamental changes to the overall methodology. Just kind of a reminder is that regardless of whether we have a difference of opinion about, you know, assigning branch point probabilities or however you want to do that, there may be ways where you acknowledge the fact that there are uncertainties. And I think we should, you know, try to address that.

The only other thing that I think we should talk about here, and I would like to get it on the record at least, is planning for future meetings. And both future meetings of the Subcommittee because I think as you have all noted, you are on a pretty rapid, I believe, I get the sense, acceleration here or progress in terms of development of this project.

And what we have -- you know, we have had about every six months or so kind of a briefing of the Subcommittee over the last year and a half, two years. We may want to think about, you know, where it is best to have the next Subcommittee meeting.

I think we are all interested in seeing this real example brought to fruition, so how the numbers are actually quantified, and not so much the numbers that are hung on the end of the decision-trees, put in some fake numbers there that is not so much important as the thought process and the structured guidance for how to think about how this is going to affect those branch points, whether we are up and down in the decision-tree.

As I said, it's still not clear to me exactly how the CRTs play a role in here, so I would like to see the whole CRT, essentially, the whole HFE quantified, not just, you know, let's pick out one

piece of one piece of one piece of one branch point to see how it's done in an integrated fashion.

I don't know, you know, how long it will take you to get to that point, but it's obviously something that you need to do.

More importantly, I don't know when the Full Committee was briefed on this the last time. It certainly was a long time ago, if ever. I didn't go look at the records. It has been a long time.

Since this is an SRM to the ACRS, it strikes me that we probably should have a Full Committee briefing at some time in the near future, if for nothing else, if there are fundamental differences of opinion among the Committee Members about the direction that the methodology is taking or has taken to this point, we should get them out on the table.

And so far, it has been a lot of discussion. We have had good discussion about preliminary pieces of the inputs and, honestly, until this meeting and the current versions of the documents, it hasn't been too clear how things were coming together. I think now we are at a point where it seems to be rather clear how the entire methodology is structured. How, you know, the literature search and the outcome of that is, my sense is, fairly

mature, you know, close to being finished.

There is, obviously, more work to do on some of the details of the applications of the methodology or however you want to characterize it for many DTs and all of that kind of stuff. But I think we should start to think about a Full Committee meeting in the near future. That's my opinion.

And what I would like to go around the other Members is, Dennis, what are your thoughts on that?

MEMBER BLEY: Oh --

CHAIR STETKAR: Is it too premature or not?

MEMBER BLEY: Well, you talked about some of the things earlier, too. I think a Full Committee meeting on the experiments would be very helpful. Now, what if we had -- well, the Full Committee only gets two hours there --

CHAIR STETKAR: Yes.

MEMBER BLEY: -- two and a half.

CHAIR STETKAR: Yes, that's the problem.

MEMBER BLEY: So there is two things that would be good to convey to the Full Committee. One is kind of the lessons learned from the benchmark studies. Three things. The other is how those

lessons learned have been rolled into the development of this methodology. And the third one is something of an overview of the methodology acknowledging there is a lot of pieces still to be filled in.

That might be too much for a single meeting, but I think it's time to get that started. Maybe we want to try one and see how much of that we can do and then maybe have another one in a couple months or something?

CHAIR STETKAR: Yes. My only -- that's -- I agree with you. It's tough. There is a lot of material to squeeze into two hours, but my concern is that eventually, because this is an SRM to the ACRS, the entire Committee will have to endorse this methodology. And we haven't really provided the Full Committee an opportunity to kind of weigh in on the direction.

And I'll admit until now, it has been a bit piecemeal, but I think we are close to a time. Organizing the topics is going to be a bit of a challenge. Joy, what do you think?

MEMBER REMPE: I think I would like to hear the results from the Halden Benchmark before it went to the Full Committee or make sure the Full Committee hears those things or you are going to have

a lot more questions --

CHAIR STETKAR: Yes.

MEMBER REMPE: -- from Committee Members like you had from me and other Members today about is this appropriate validation? So that topic needs to be included or you are going to have a lot more questions. And I would like to hear it beforehand, but --

CHAIR STETKAR: Okay. Charlie?

MEMBER BROWN: I'd like to hear the Halden thing before.

CHAIR STETKAR: Okay.

MEMBER BROWN: I mean, the experiments, the benchmarks beforehand. I wouldn't try to do both of those at the same time at a Full Committee meeting. I would do the benchmarks --

CHAIR STETKAR: Yes.

MEMBER BROWN: -- Halden stuff in one and then I would do --

CHAIR STETKAR: Okay.

MEMBER BROWN: -- an abbreviated version with certain things protracted from the type of presentation we had here today.

CHAIR STETKAR: I don't think -- okay. I've got the message then. It sounds like we need

another Subcommittee meeting to --

MEMBER BROWN: Yes, I would say I think it would be up to the Subcommittee to --

CHAIR STETKAR: -- before bringing it up to the Full Committee.

MEMBER BROWN: -- bring the benchmarking stuff. Yes, that's a suggestion.

CHAIR STETKAR: That sounds like it's probably a reasonable path forward.

MEMBER BROWN: Yes.

CHAIR STETKAR: We don't need to schedule that right now, obviously, but I just kind of wanted feedback from the Members on this notion of going to the Full Committee, because we don't want to wait until 2013 or September 2012, whatever September that was, to bring it in front of the Full Committee and then suddenly find that there are some fundamental heartaches about the overall methodology.

If there are fundamental heartaches, at least it is better to understand what they are and the basis for them when there may be some opportunity to redirect a little bit, but I think you are getting to the point here where the door is open, or if not the horse has left the barn already. And I just want to make sure that the Full Committee has some opportunity

in a timely manner to get some feedback.

With that, unless there are any other questions or comments by the Members? Dennis?

MEMBER BLEY: No, sir.

CHAIR STETKAR: Do we have any members of the public here who would like to make a comment or anyone? Can you open up the bridge line? Because I know we do have some people on the bridge line out there.

While we are doing that, do any of the participants have any more comments? Hearing silence, we are waiting for the bridge line to open up, because I honestly don't know who is out there.

MR. LAI: It is open.

CHAIR STETKAR: It is open. Would somebody, not Dennis Bley, who is out there at least utter something if you are on the bridge line, so that we know that it is open? Just say something.

PARTICIPANT: No questions here at NuScale.

CHAIR STETKAR: Thank you. At least we know the bridge line is open.

So does anyone on the bridge line have any questions or comments they would like to make?

Hearing nothing, I will assume that the

answer is negative.

And I would like to thank everybody. You guys have done an awful lot of work since the last time we got together in April. I think that it is pretty clear that things are coming together. I certainly have a much better understanding of what is being done and how it is being done.

And you certainly packed an awful lot of material into a five hour, which isn't bad, I mean, it's a 25 percent overrun meeting. And I really appreciate everything.

DR. XING: Yes.

CHAIR STETKAR: So thank you very much. And we are adjourned.

(Whereupon, the open session meeting was concluded at 1:36 p.m.)

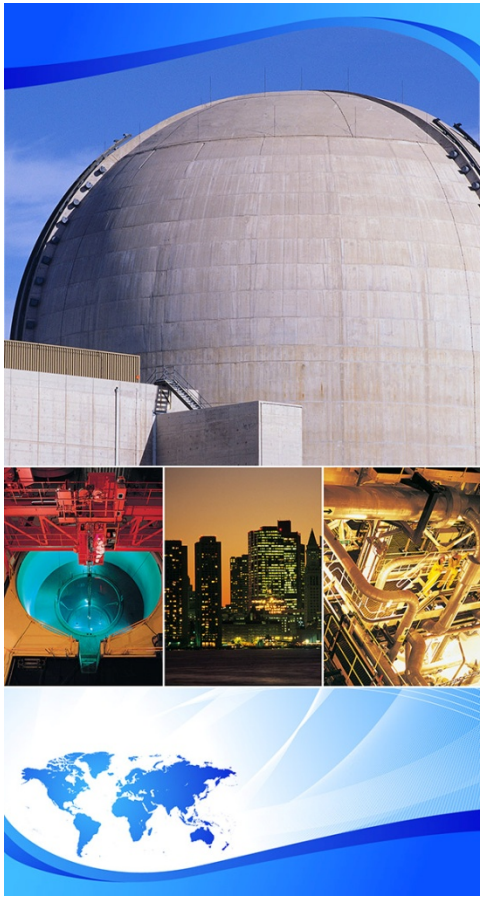

Addressing SRM-M061020 on Human Reliability Analysis Model Differences

Jing Xing, Senior Human Performance Engineer
Erasmia Lois, Senior Risk and Reliability Analyst
Division of Risk Analysis
Office of Nuclear Regulatory Research

ACRS PRA Subcommittee Meeting
Dec 14, 2011

A Collaboration of U.S. NRC Office of Nuclear Regulatory Research (RES) & Electric Power Research Institute (EPRI)

Agenda Item 2

Jing Xing, RES

Stuart Lewis, EPRI

introduction

SRM-M061020

SRM-M061020 directed the ACRS to

> "work with the staff and external stakeholders to evaluate the different human reliability models in an effort to propose a single model for the agency to use or guidance on which model(s) should be used in specific circumstances"

RES Approach

Existing HRA methods

Strength / good features

Limitations

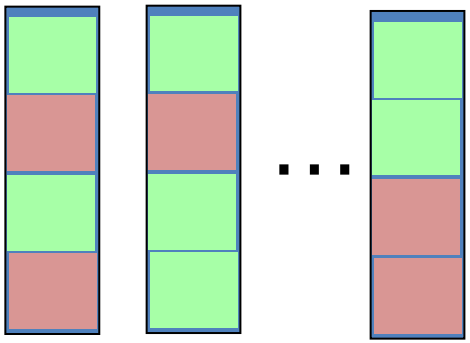

HRA Good Practices

HRA empirical studies

General HRA structure & technical basis

User guidance & example analysis

Implementation: CRT, CFM, DT, and HEPs

Integrated Decision-tree Human Event Analysis System (IDHEAS)

Strategic Approach to Applications

Application / Deliverables	Internal event / at power (Procedural)	Low power, shutdown, External hazards, Level 2/3 PRA
General structure & technical basis	✓	✓
User guidance & analysis example	✓	Extension and modification for domain-specific needs
Implementation (CRT, CFMs, DTs, HEPs)	✓	Extension and modification for domain-specific needs

Project Status

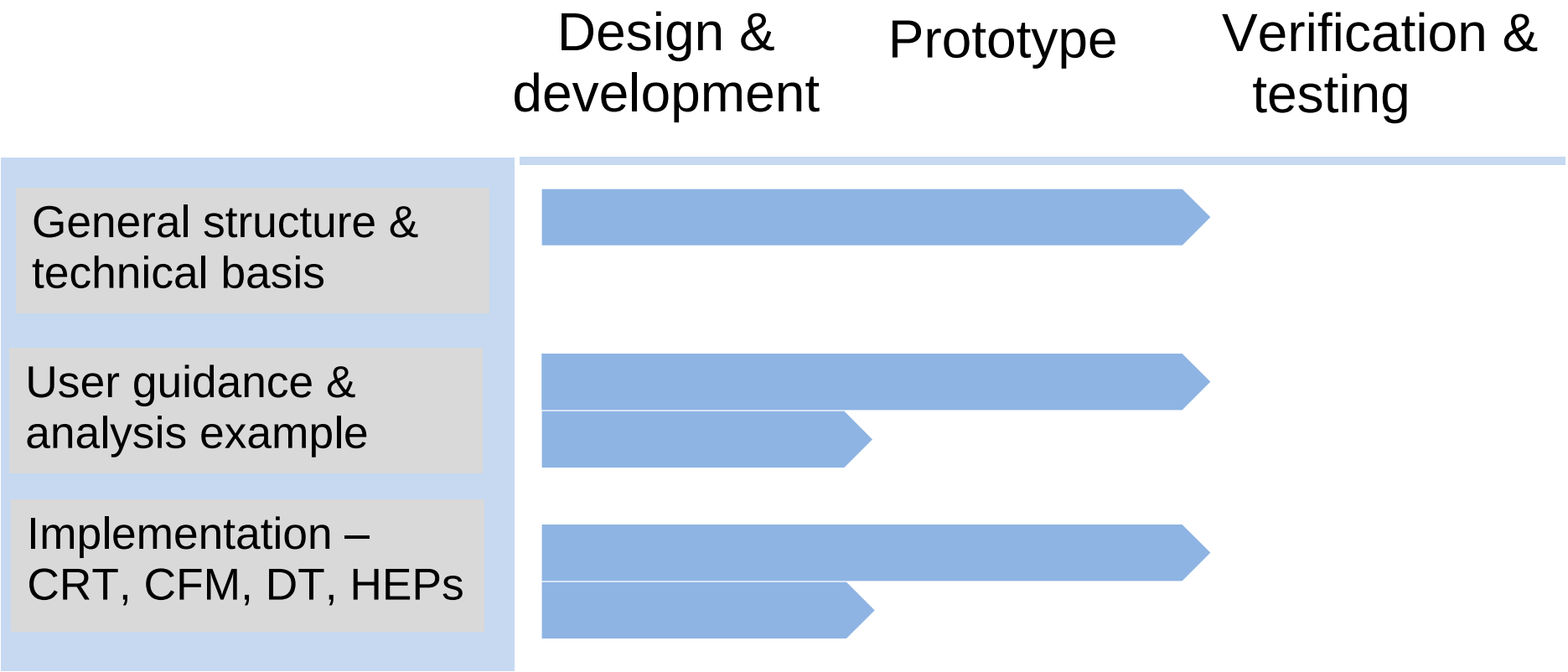

Overview of the Meeting

Objective

•Staff uses an example to present the prototype of the Integrated Decision-tree Human Event Analysis System (IDHEAS)

•Seek inputs from ACRS and stakeholders

Presentation Outline

1. Overview of the method and its parts
2. Example analysis
   - PRA scenario and HFE
   - Qualitative analysis
   - Quantification

Agenda Item 3

Vinh N. Dang, Paul Scherrer Institute

Overview of method, its parts, and process

Overview of method, its parts, and process

Aim:

- **traceable, reproducible HRA results**

  starting from

- **identified Human Failure Events (HFEs) and their PRA context**

HRA results:

- **identification of key factors and challenges for performance**
- **HFE failure probabilities (human error probabilities)**

Modeling informed by state-of-knowledge in human performance and cognitive psychology

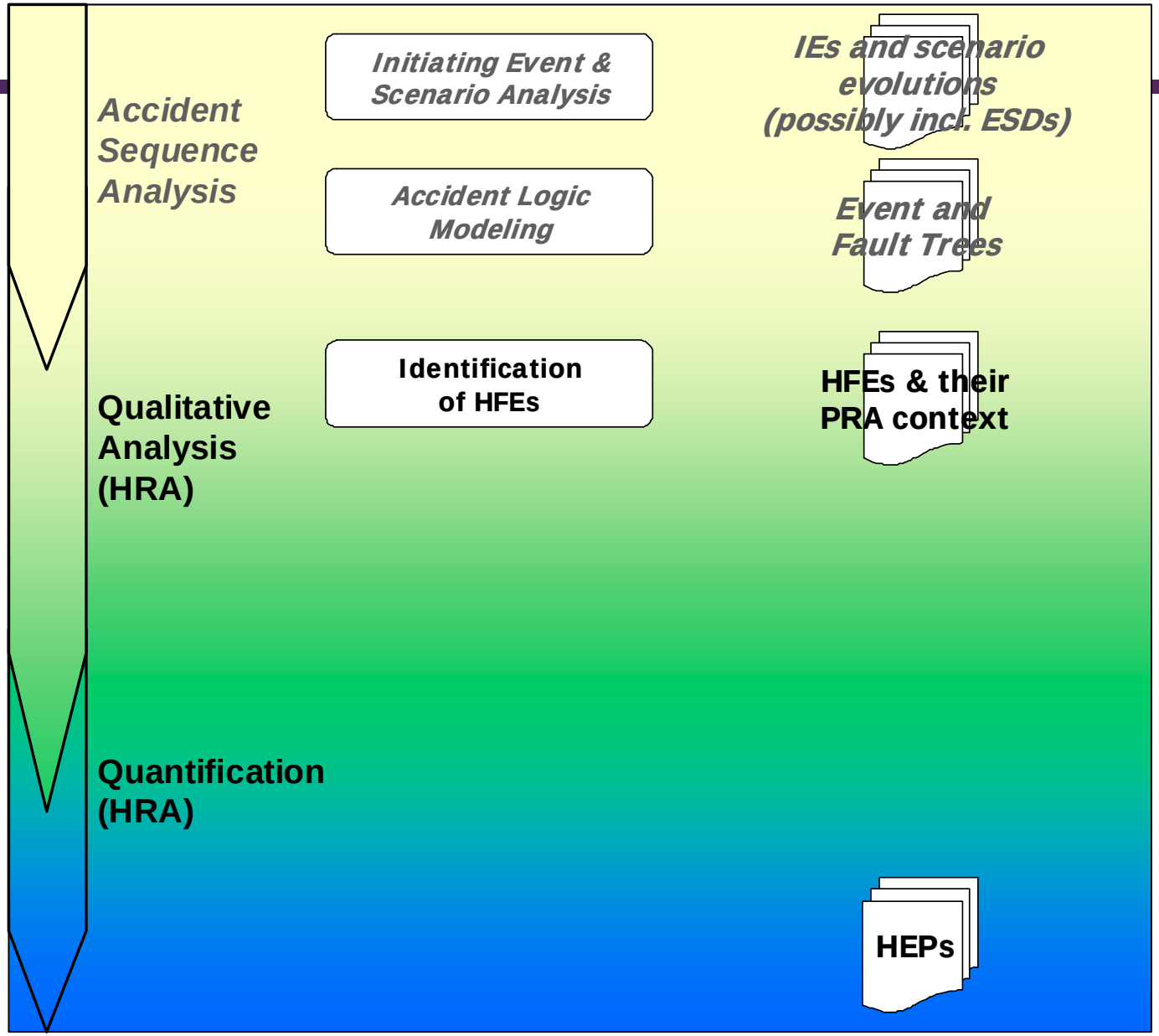
Accident Sequence Analysis
Initiating Event & Scenario Analysis
IEs and scenario evolutions (possibly incl. ESDs)
Accident Logic Modeling
Event and Fault Trees
Qualitative Analysis (HRA)
Identification of HFEs
HFEs & their PRA context
Quantification (HRA)
HEPs

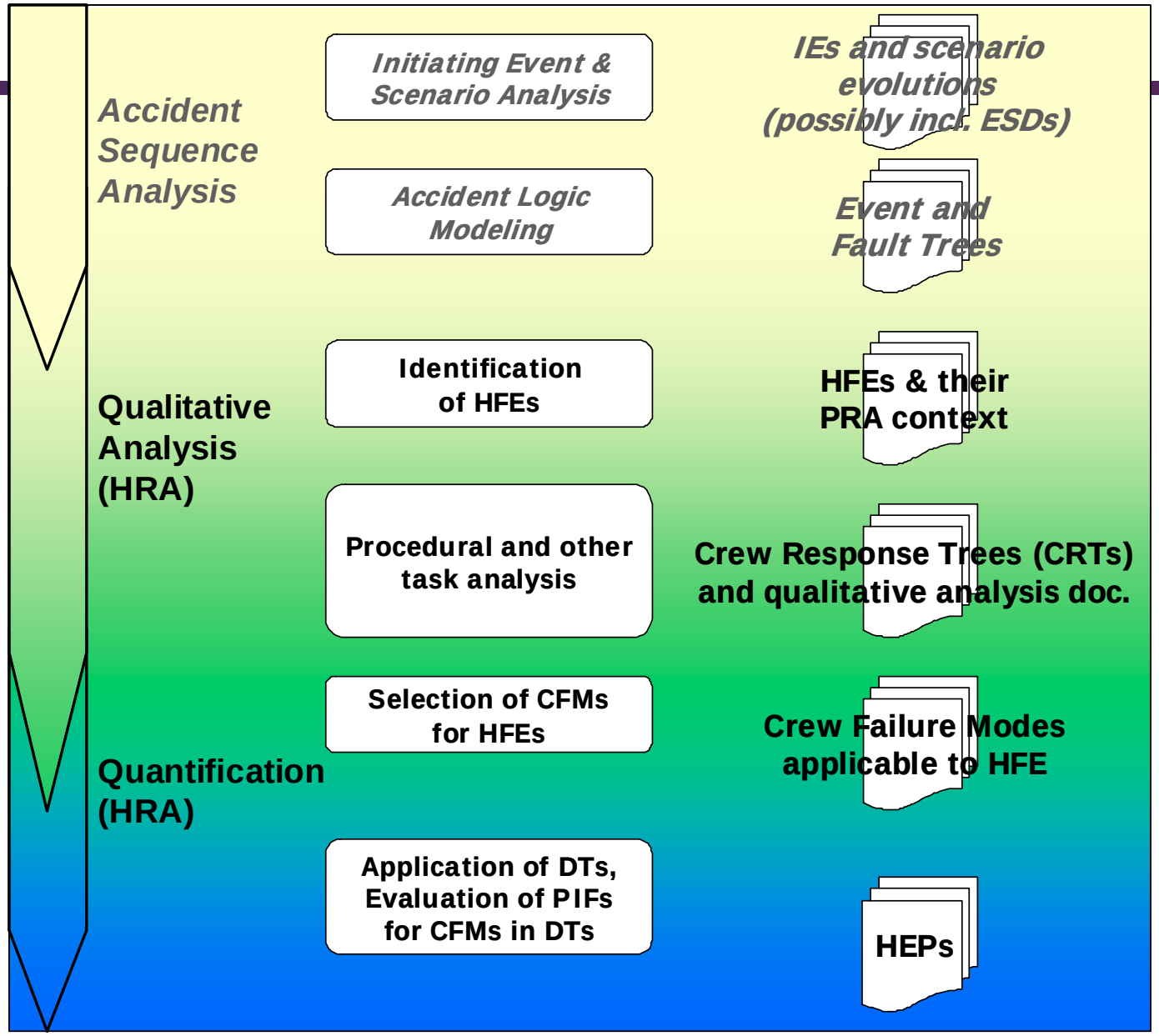
Accident Sequence Analysis
Initiating Event & Scenario Analysis
IEs and scenario evolutions (possibly incl. ESDs)
Accident Logic Modeling
Event and Fault Trees
Qualitative Analysis (HRA)
Identification of HFEs
HFEs & their PRA context
Procedural and other task analysis
Crew Response Trees (CRTs) and qualitative analysis doc.
Quantification (HRA)
Selection of CFMs for HFEs
Crew Failure Modes applicable to HFE
Application of DTs, Evaluation of PIFs for CFMs in DTs
HEPs

Key elements of IDHEAS method

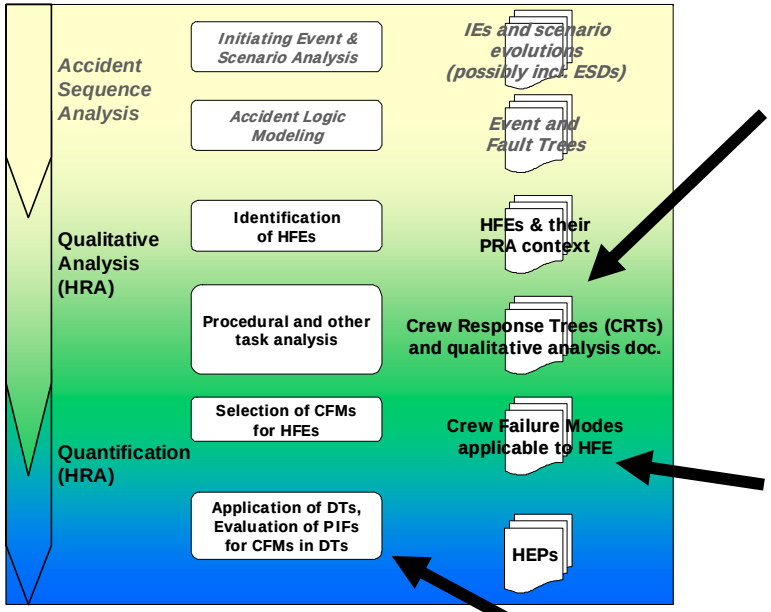

- **Crew response tree (CRT)**
  - represent scenario from operating crew's perspective
  - identify key actions, status assessments, and procedural transfers
  - graphical view of qualitative analysis, supported by documentation of context and performance conditions

  item 4 (walk-though of example)

- Set of **Crew failure modes (CFMs)**
  - identify CFMs applicable to a given HFE
  - construct reduced CRT (CRT for quantification)

  item 4 (walk-through of example)

- **Decision trees (DTs)** for CFMs
  - evaluation of performance influencing factors (PIFs) determine CFM probabilities

  item 6 (walk-through of example)

Walk-through of example

- Show how different elements of IDHEAS are applied through an example
- HFE in example: Feed & Bleed in a pressurized water reactor (B&W-type)

Outline of example

HFE : Feed & Bleed in Loss of Feedwater scenario (LOFW, B&W-type PWR)

- **PRA scenario and HFE**
- **Qualitative analysis and CRT**
- **Identification of CFMs relevant to this HFE**

- **CFMs, PIFs and their basis in the literature**
- **Quantification model**
- **Evaluation of HEP**

continuation of example in agenda item 6

Qualitative analysis in the example - background

start: **HFEs and their PRA context**

objective: **identify main features of task and context that will influence success or failure, as input to quantification**

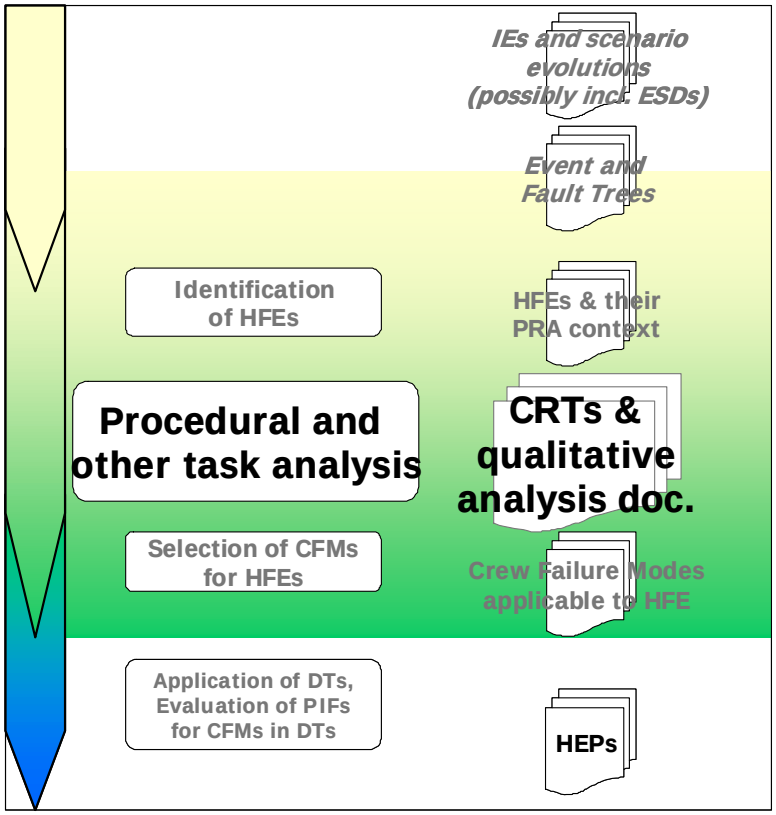

Qualitative analysis (cont.)

Targets for improvements

- scenario and demands/requirements of task
  depth of analysis
- potential issues, challenges for crews
  comprehensiveness

- qualitative-quantitative interface
  - model of HFE (e.g. diagnosis-execution)
    representation of identified issues and effect on failures
  - assessment of factors in quantification
    increase consistency of PSF ratings

- CRT representation as focus of analysis
- guidance for CRT development & qualitative analysis

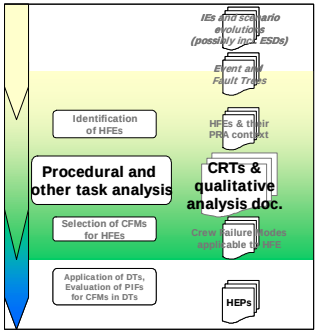

- CRT, reduced for quantification, and CFMs
- decision trees (DTs), DT header questions/guidance

Stuart Lewis, EPRI

PRA scenario and definition of HFE (example)

Definition of HFE: Sequence Context

- Function-level scenario:
  - Reactor trip
  - Failure of heat removal via steam generators
  - Failure of feed-and-bleed cooling

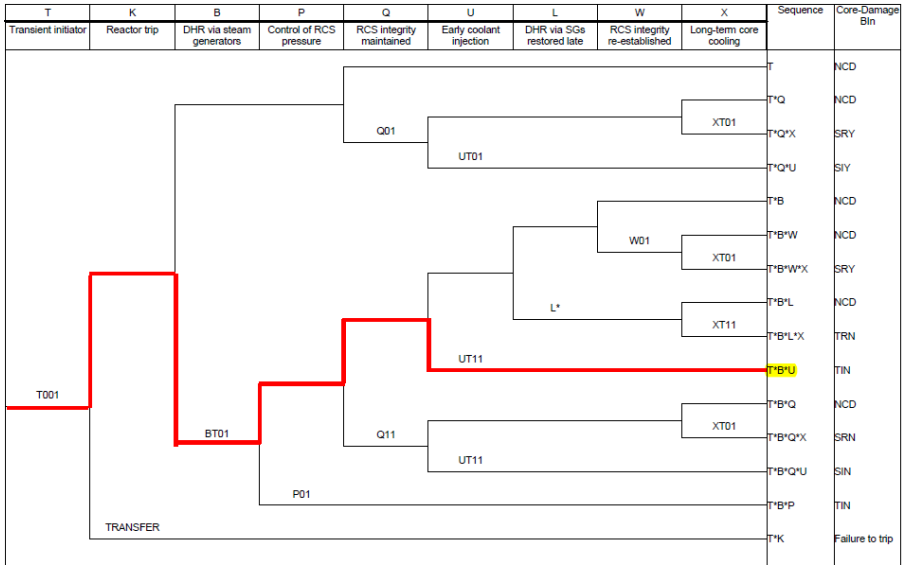

- More specific context:
  - Loss of main feedwater (from ~100% full power)
  - Reactor trip due to LOMFW
  - Failure of (automatic) emergency feedwater
  - Backup feedwater pump (manual) not available
  - Operators fail to initiate feed-and-bleed cooling

Definition of HFE

- Operators fail to initiate feed-and-bleed cooling given
  - Loss of main feedwater <u>before</u> reactor trip
  - No feedwater flow to steam generators after LOMFW
  - Steam generators dry out in < 3 min
  - Operators have ~20 min to initiate feed-and-bleed cooling
  - Relevant indications:
    - Symptoms of loss of feedwater (decreasing SG levels, increasing RCS pressure, trouble alarms on EFW, etc.)
    - Hot-leg temperature exceeds 600F

Event Sequence Diagram (ESD)

- Developed to understand paths through emergency operating procedure
  - Multiple paths lead to action to initiate feed-and-bleed
  - Helpful to understand relationships, especially to starting backup feedwater pump
- This ESD differs slightly from typical ESDs
  - Developed (in this case) after sequence analysis, to support HRA
  - Focuses on
    - operator actions and possible failure paths, rather than developing system failures
    - procedural sequence

ESD – First Portion Sets Initial Context

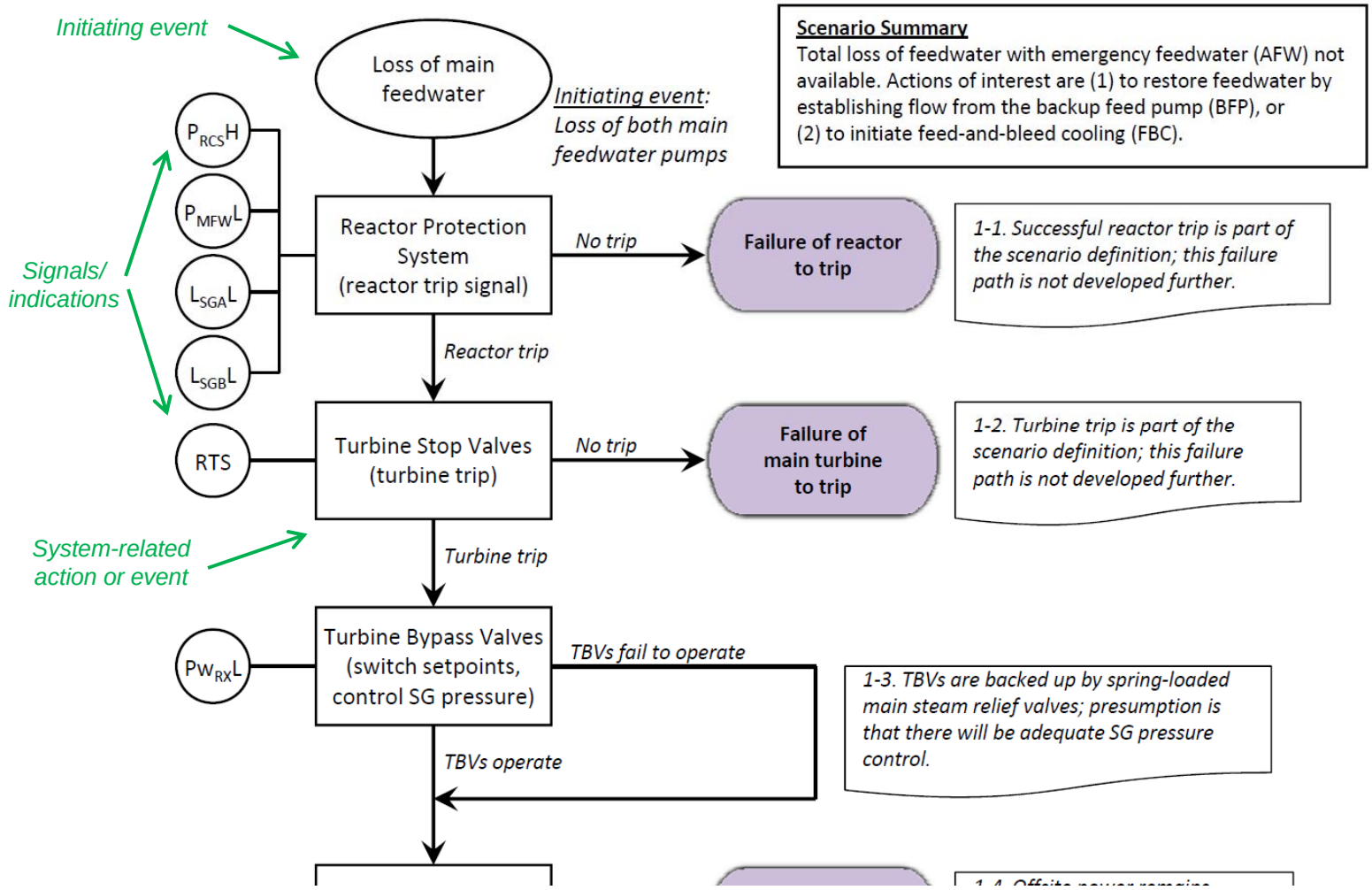

ESD – Representation of Human Actions

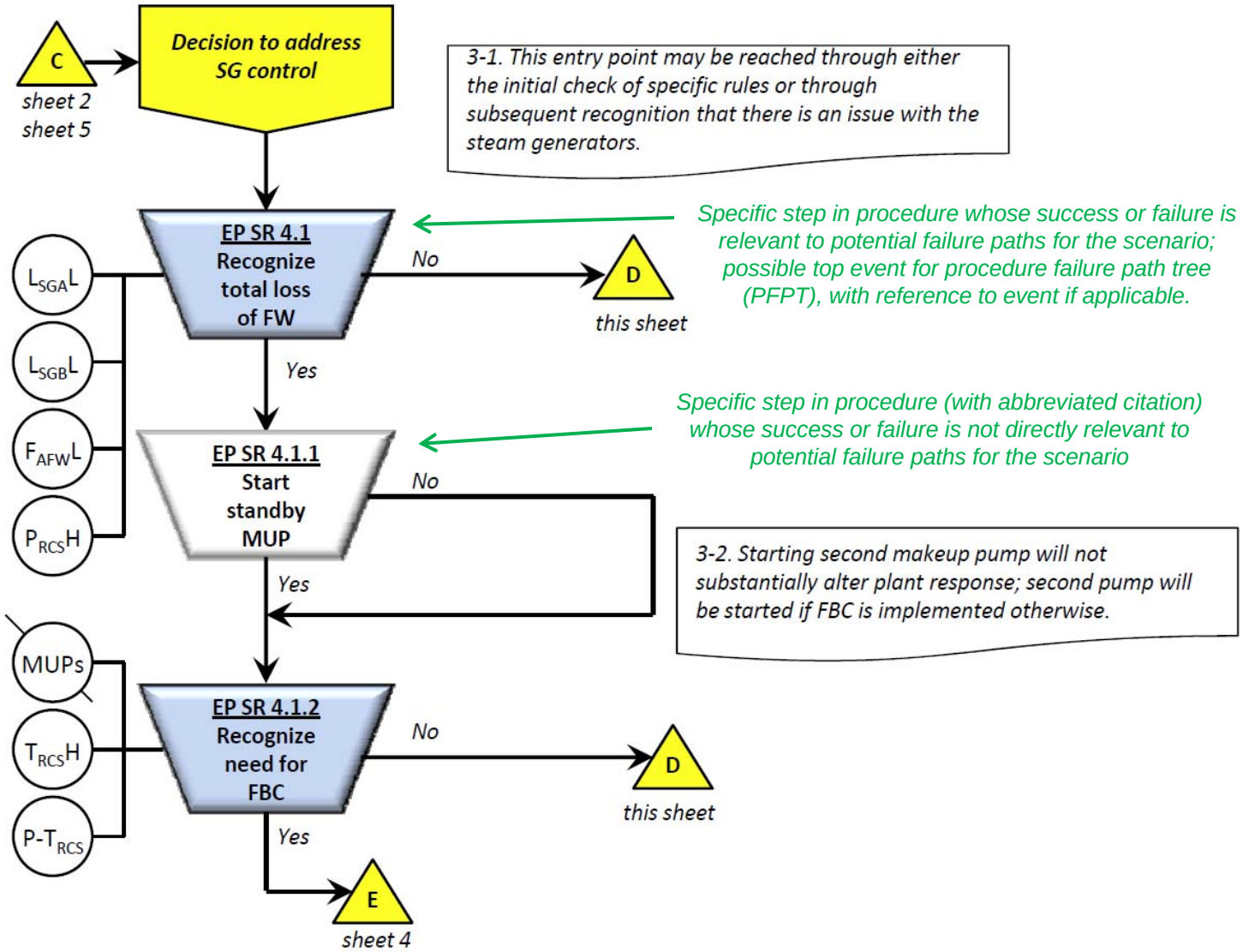

ESD – Failure Evolutions

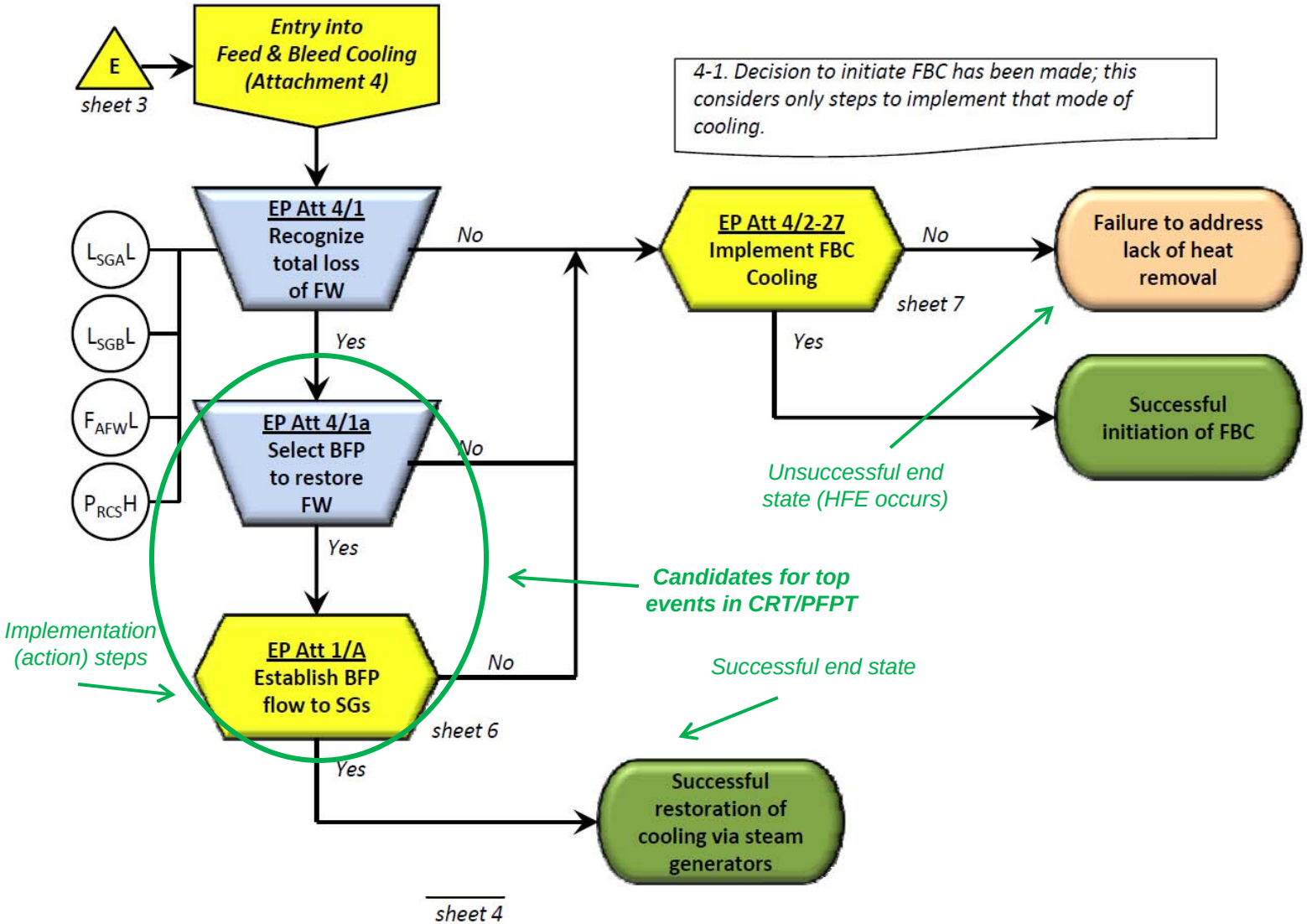

A CRT is built from the ESD

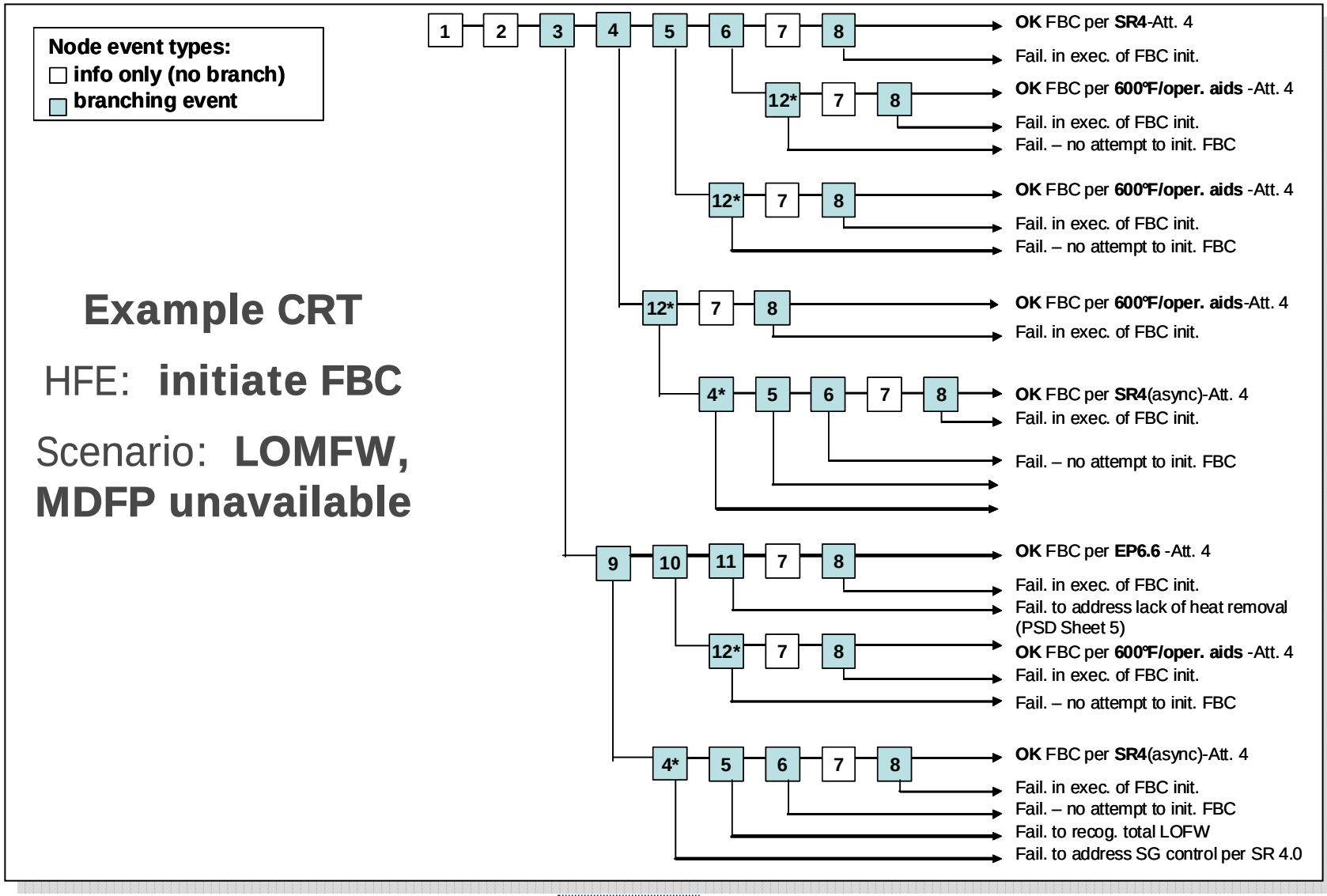

Example CRT

HFE: **initiate FBC**

Scenario: **LOMFW, MDFP unavailable**

Example CRT - detail

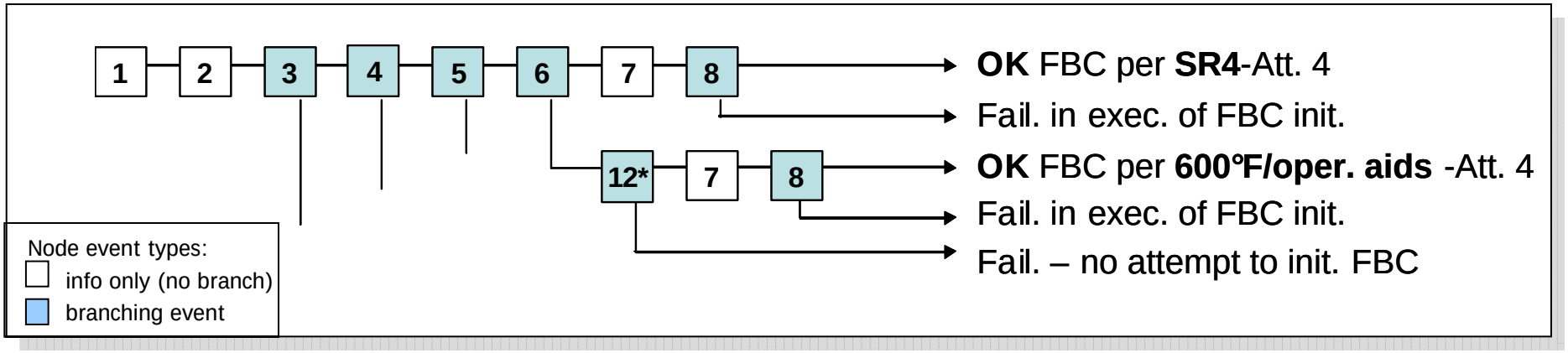

1	**LOMFW with reactor trip and failure of AFW**
2	**Enter BW-OP-02000**
3	**Check specific rules (SRs) per EP 4.1 (initially)**
4	**Address SG control per EP SR 4**
4*	**Address SG control per EP SR 4 (*asynchr.)**
5	**Recognize total LOFW per SR 4 (EP SR 4.1)**
6	**Recognize need for FBC per SR 4 (EP SR 4.1.2)**
7	**Enter Attachment 4 – F&B Cooling**
8	**Initiate FBC per Att. 4**
9	**Recognize lack of heat transfer per EP 6.0**
10	**Recognize lack of FW per EP 6.1**
11	**Recognize need for FBC (EP6.6)**
12*	**Recognize need for FBC per oper. aids (*asynchr on 600°F cue)**

Qualitative analysis results - example

CRT is graphical focus of qualitative analysis

Qualitative analysis results:

describe features of scenario, contexts,
and tasks, that drive performance.

Linked to evolution of scenario
from crew's perspective.

Refer to CRT node events, ESD if available.
Specific to sequence (path-specific)

Qualitative analysis results - example

Node 4: "Address SG control per SR 4"

Context EP 4.1 right after completion of immediate actions. **Cf. ESD sheet 2**

Guidance Instructs crew to "Implement any necessary Specific Rules" – acts as reminder, no specific criteria listed

SR 4.0 "Steam Generator Control"

Context One of 6 SRs, in priority order. SR 2.0 (SCM) may lead to slight delay. SR 1.0 and 3.0 not relevant.

Cues Per ESD Sheet 2, main indications are low levels in both SGs

Additionally, RCS P is increasing, EFW trouble alarms.

...

Qualitative analysis results - example

Node 4: "Address SG control per SR 4"

Context EP 4.1 right after completion of immediate actions. **Cf. ESD sheet 2**

Guidance Instructs crew to "Implement any necessary Specific Rules" – acts as reminder, no specific criteria listed

SR 4.0 "Steam Generator Control"

Context One of 6 SRs, in priority order. SR 2.0 (SCM) may lead to slight delay. SR 1.0 and 3.0 not relevant.

Cues Per ESD Sheet 2, main indications are low levels in both SGs

Additionally, RCS P is increasing, EFW trouble alarms.

...

Node 5: "Recognize total LOFW per SR 4, in Step SR 4.1"

4.1 "<u>If</u> a total loss of feedwater is identified, <u>then</u> ...

Context Initial evaluation of SR 4.0 **Cf. ESD sheet 3**

Guidance No criteria listed in SR 4.0. Procedure background material. Relationship to "dry SG criteria" in Att. 1 on FW restoration.

Training [Information from trainers and operators...]

Cues Alarms: SG levels, AFW low flow, high RCS P
Flows from AFW, MDFP, SUFP, MFWP

...

Gareth Parry, ERIN

Identification of Relevant CFMs

Analysis of the CRT

- Prior to quantification, the CRT is analyzed in detail with respect to the HFE boundary conditions, especially the timing of the cues, arrival at specific procedure steps, etc. in the PRA scenario

- Node by node assessment
  - Node 3: Failure to check specific rules per EOP step 4.1 - would be a violation of practice
  - Node 4: Failure to recognize the need for level control – would require failure to recognize that the level in both SGs was falling rapidly

Analysis of the CRT (Cont.)

- Node by node assessment (cont.)
  - Node 5: Failure to recognize a total loss of feedwater at step SR 4.1 having recognized that SG levels are falling rapidly – other indications include no AFW flow, increasing RCS pressure.
  - Node 6: Failure to recognize the need for F&B cooling from step SR 4.1.2, having recognized a complete loss of feedwater – at least one of the conditions, HLT > 600ºF, is met by the time this step is reached
  - Node 8: Failure to initiate feed-and-bleed cooling successfully per attachment 4
  - Nodes 9 and 12: Initial opportunities to correct earlier failures (EOP step 6 and operator aids respectively)

Reduced CRT for Quantification - Example

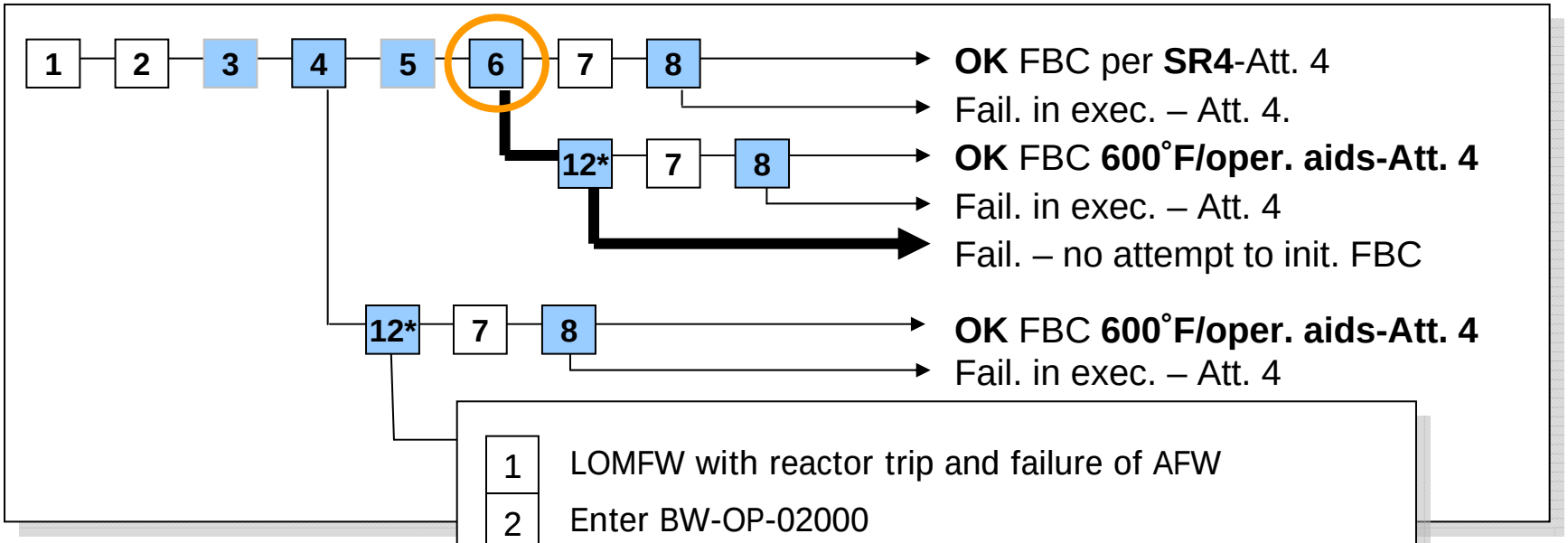

1	LOMFW with reactor trip and failure of AFW
2	Enter BW-OP-02000
3	Check specific rules (SRs) per EP 4.1 (initially)
4	**Address SG control per EP SR 4**
5	Recognize total LOFW per SR 4 (EP SR 4.1)
6	**Recognize need for FBC per SR 4 (EP SR 4.1.2)**
7	Enter Attachment 4 – F&B Cooling
8	**Initiate FBC per Att. 4**
12*	**Recognize need for FBC per oper. aids (*asynchr on 600˚F cue)**

B&W LOFW,
no MDFP avail
HFE: initiate FBC

Crew Failure Modes (CFMs)

- Plant Status Assessment
  - Key alarm not attended to
  - Critical data incorrectly processed
  - Critical data miscommunicated
  - Critical data not obtained
  - Critical data dismissed/discounted
  - Decide to stop collecting critical data
  - Critical data not checked with sufficient frequency
  - Wrong data source attended to

Crew Failure Modes (CFMs) – (Cont.)

- Response Planning
  - Misinterpret procedures
  - Choose inappropriate strategy
  - Delay implementation
- Action
  - Fail to execute action (complete omission)
  - Incorrectly perform response

Example – CFMs to be considered for Node 6 – Need for F&B cooling

- CFMs not relevant for Node 6
  - Key alarm not attended to –not a response to an alarm
  - Critical data not obtained – data is available
  - Decide to stop collecting critical data – not a monitoring task
  - Critical data not checked with sufficient frequency – not a monitoring task
  - Wrong data source attended to – no alternative sources
  - Misinterpret procedures – procedure is clear
  - Choose inappropriate strategy – no alternate strategy
  - Fail to execute action (complete omission) – not an action
  - Incorrectly perform response – not an action

CFMs Relevant for Node 6

- The CFMs that are relevant are:
  - Critical data incorrectly processed
  - Critical data dismissed/discounted
  - Critical data miscommunicated
  - Delay implementation
- For this presentation we will address the CFM – Delay implementation
- The probability of failure due to a CFM is assessed using a decision tree, where the branches relate to existence or not of certain PIFs (Later slides)
- Before describing the DT, the approach to identifying the PIFs will be described.

Back-up Slides

Reduction of the example CRT - detail

Node event types:
- ☐ **info only (no branch)**
- ☐ **branching event**

1	**LOMFW with reactor trip and failure of AFW**
2	**Enter BW-OP-02000**
3	**Check specific rules (SRs) per EP 4.1 (initially)**
4	**Address SG control per EP SR 4**
4*	**Address SG control per EP SR 4 (*asynchr.)**
5	**Recognize total LOFW per SR 4 (EP SR 4.1)**
6	**Recognize need for FBC per SR 4 (EP SR 4.1.2)**
7	**Enter Attachment 4 – F&B Cooling**
8	**Initiate FBC per Att. 4**
9	**Recognize lack of heat transfer per EP 6.0**
10	**Recognize lack of FW per EP 6.1**
11	**Recognize need for FBC (EP6.6)**
12*	**Recognize need for FBC per oper. aids (*asynchr on 600°F cue)**

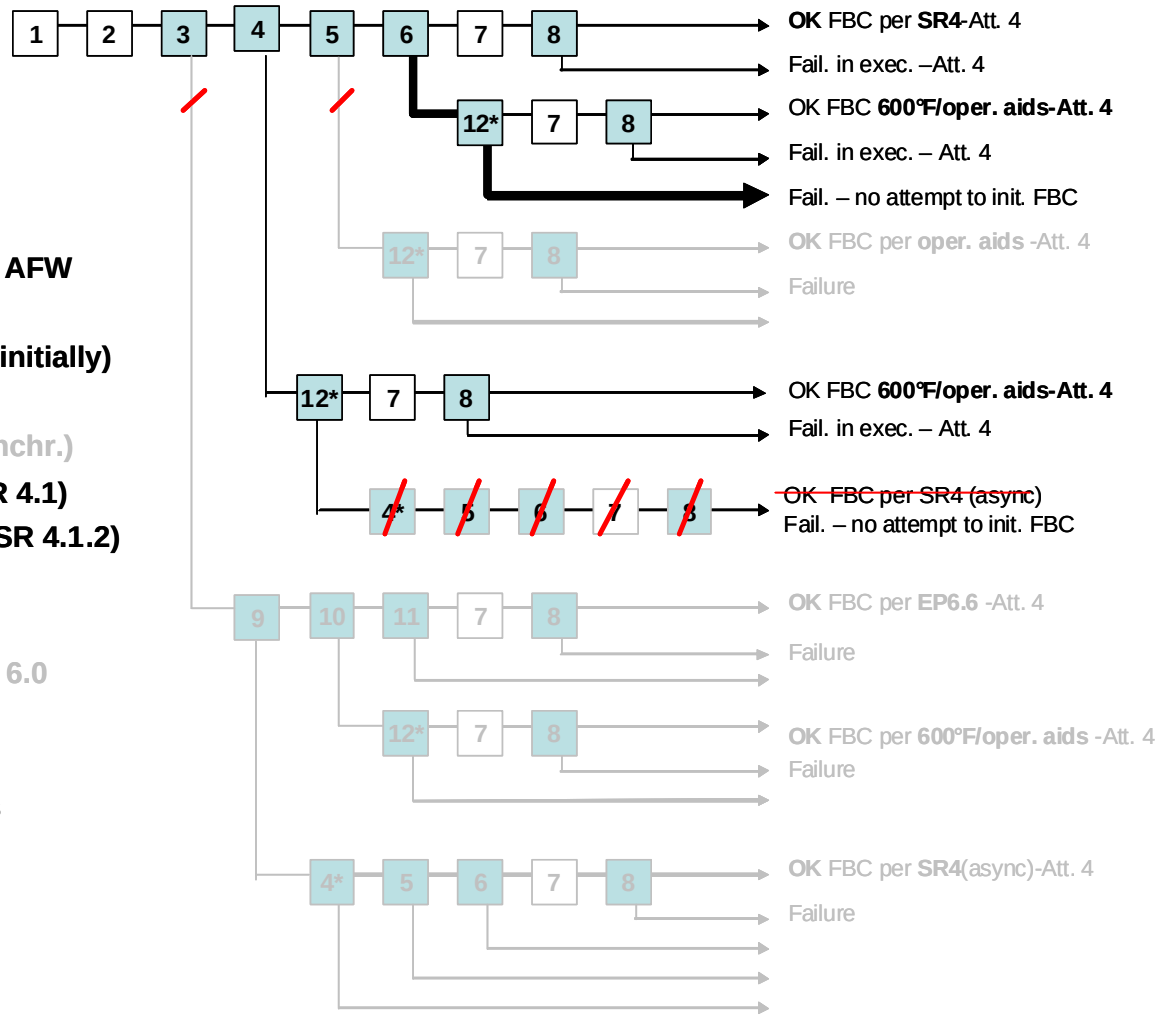

Agenda
Item 6

April M. Whaley, INL
Stacey M. L. Hendrickson, SNL

MAPPING THE RESULTS OF THE LITERATURE REVIEW TO THE CFM

CFM: Delay Implementation

Scenario: The crew decides to delay implementation of the action such that the response is not successful.

Assumption: A correct plant status assessment was done:

- Correct understanding of the nature of the plant disturbance
- Correct understanding of the critical safety functions that need to be controlled or restored

Note: This does not apply to a deliberate choice among alternatives; the crew simply delays action on a response they know is appropriate long enough that they exceed the time available for action

Mapping the Results of the Literature Review to the CFM Delay Implementation

The goal of mapping is to identify relevant PIFs to inform the development of decision trees

- Step 1: Mapping the macrocognitive functions to the CFM
  - Detecting/Noticing: N/A
  - Sensemaking/Understanding: N/A
  - Decision Making: RELEVANT
  - Action Implementation: N/A
  - Team Coordination: if teamwork is identified as an issue, the CFM "Data miscommunicated" should be used

Mapping the Results of the Literature Review to the CFM Delay Implementation

- Step 2: Identification of relevant Proximate Causes (PCs)
  - PCs are the *categories* of human failures that may lead to failures of the macrocognitive functions. *Readily identifiable* as leading to the failure.
- Step 3: Identification of relevant Cognitive Mechanisms
  - Psychological or cognitive processes that, when associated with error-promoting contextual factors (i.e., PIFs), can lead to failure.
- Step 4: Identification of relevant PIFs
  - Contextual factors that may activate the failure mechanisms

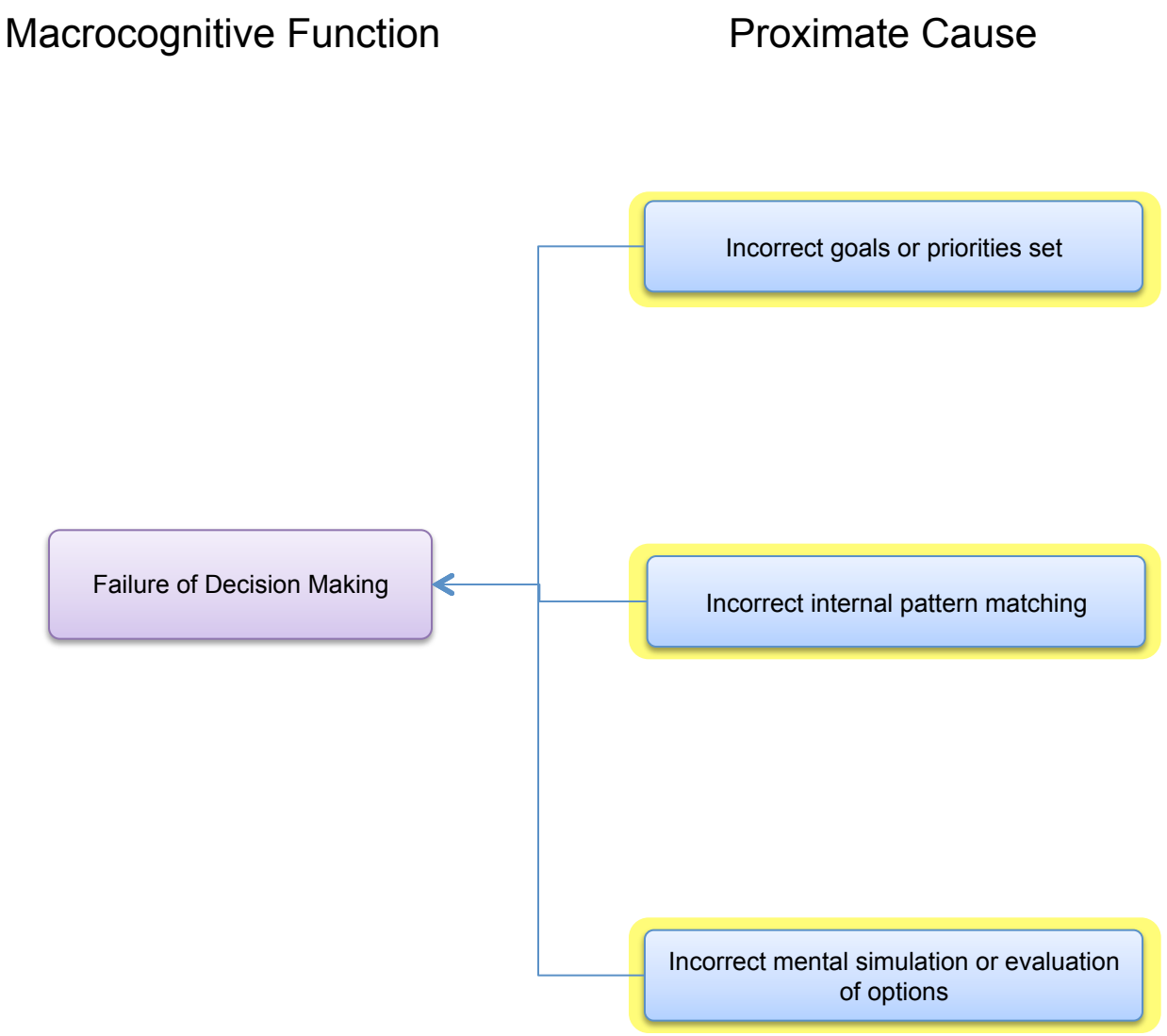
Macrocognitive Function
Proximate Cause
Failure of Decision Making
Incorrect goals or priorities set
Incorrect internal pattern matching
Incorrect mental simulation or evaluation of options

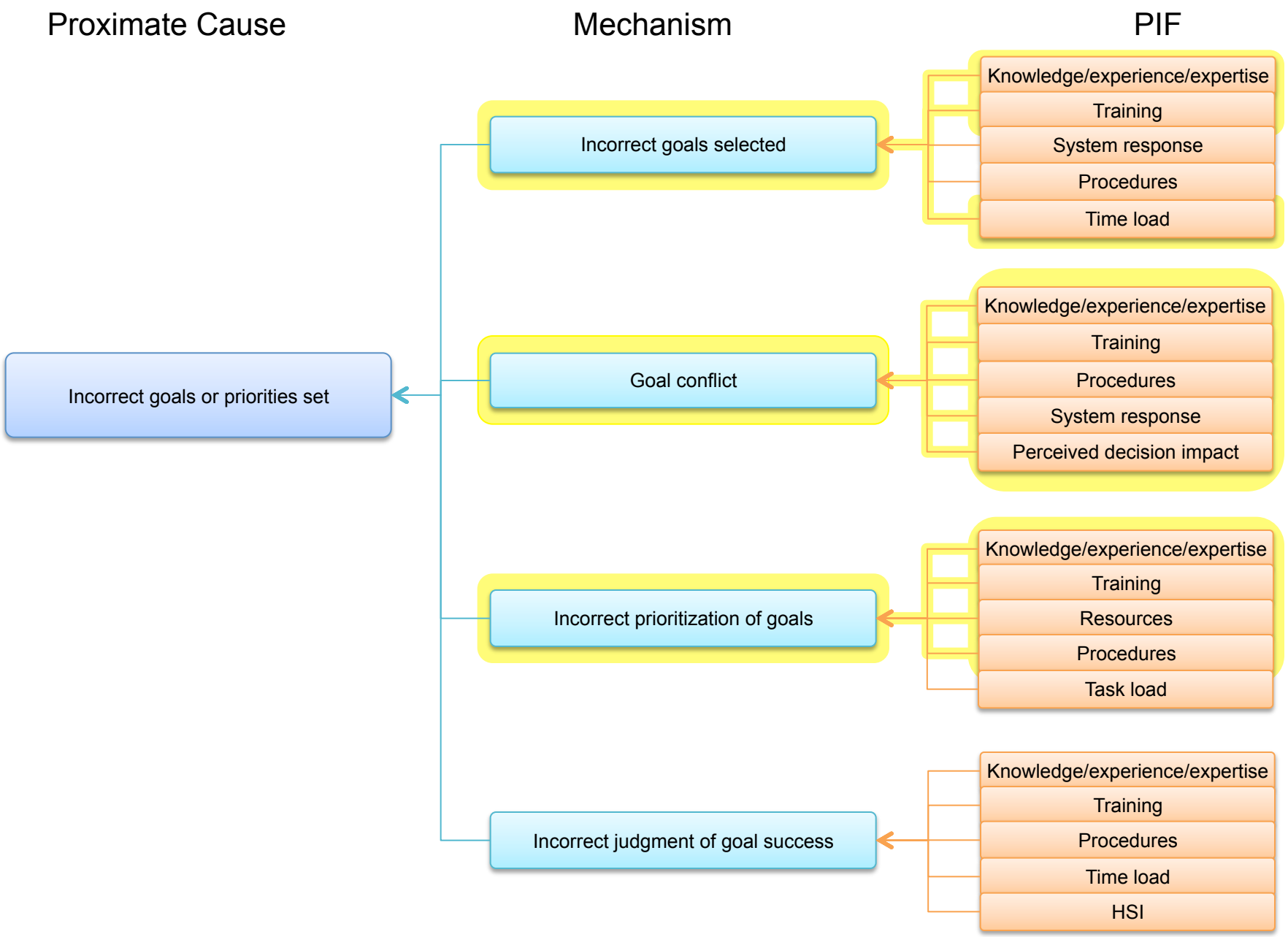
Proximate Cause
Mechanism
PIF
Incorrect goals or priorities set
Incorrect goals selected
Knowledge/experience/expertise
Training
System response
Procedures
Time load
Goal conflict
Knowledge/experience/expertise
Training
Procedures
System response
Perceived decision impact
Incorrect prioritization of goals
Knowledge/experience/expertise
Training
Resources
Procedures
Task load
Incorrect judgment of goal success
Knowledge/experience/expertise
Training
Procedures
Time load
HSI

Example: Goal Conflict

- A conflict may exist between goals, (e.g. of safety and continued operation of the plant)

- For example:
  - An improper balance of priorities may lead crew to choose a response option that is less safe (but keeps the plant operating)
  - Crew is reluctant to execute a specific response path due to the consequences of the actions (e.g., reduces system life expectancy; will result in significant plant outage duration)

Relevant PIFs for Goal Conflict

- **Procedures**
  - Complicated logic
  - Inappropriate level of specificity of criteria
- **Perceived decision impact**
  - Awareness of the economic consequences
  - Clean-up costs, length of shut down
- **Knowledge/Experience/Expertise**
- **Training**
- **System responses**

References: Orasanu, 1993; Reason, 1997

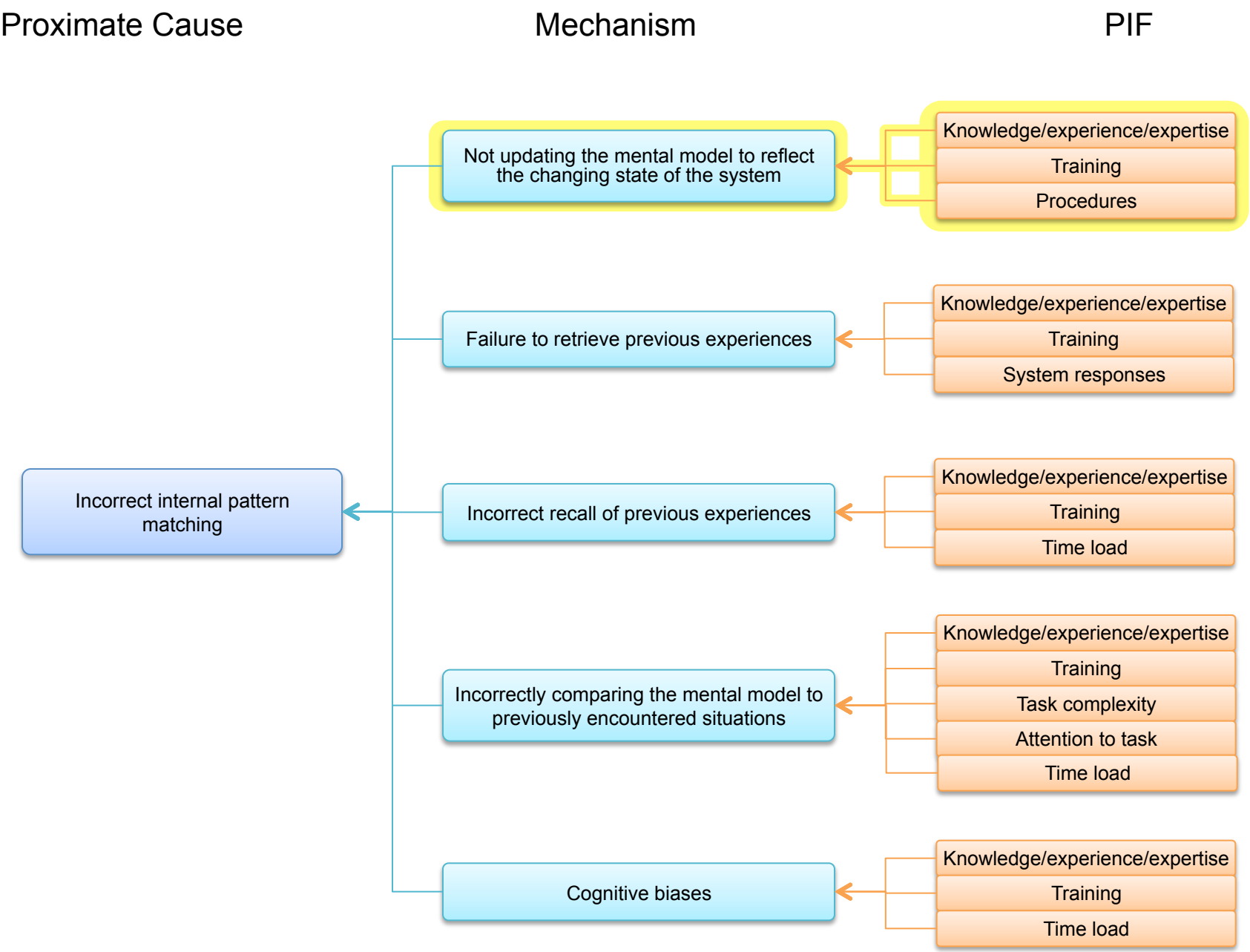
Proximate Cause
Mechanism
PIF
Incorrect internal pattern matching
Not updating the mental model to reflect the changing state of the system
Knowledge/experience/expertise
Training
Procedures
Failure to retrieve previous experiences
Knowledge/experience/expertise
Training
System responses
Incorrect recall of previous experiences
Knowledge/experience/expertise
Training
Time load
Incorrectly comparing the mental model to previously encountered situations
Knowledge/experience/expertise
Training
Task complexity
Attention to task
Time load
Cognitive biases
Knowledge/experience/expertise
Training
Time load

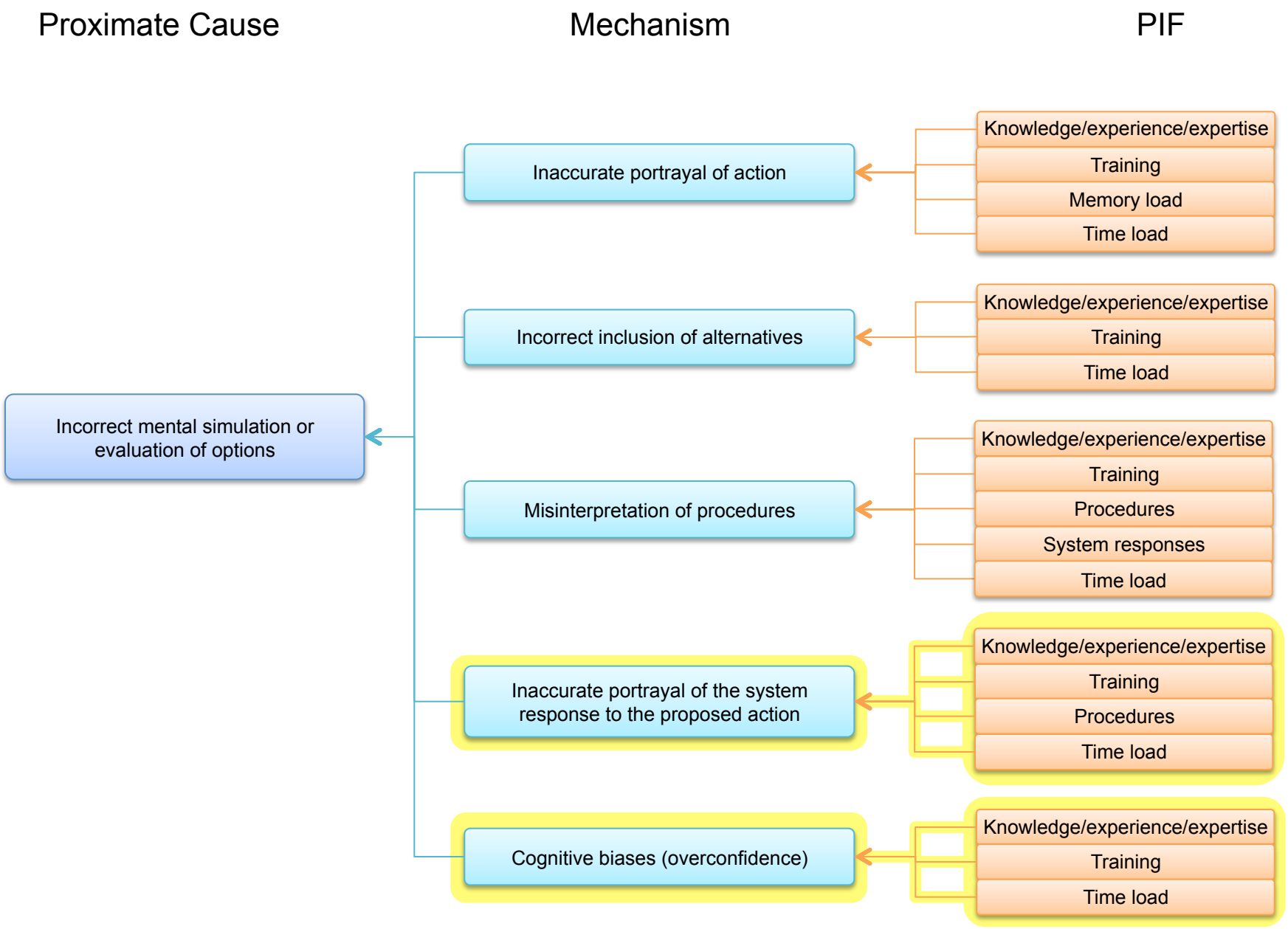
Proximate Cause
Mechanism
PIF
Incorrect mental simulation or evaluation of options
Inaccurate portrayal of action
Knowledge/experience/expertise
Training
Memory load
Time load
Incorrect inclusion of alternatives
Knowledge/experience/expertise
Training
Time load
Misinterpretation of procedures
Knowledge/experience/expertise
Training
Procedures
System responses
Time load
Inaccurate portrayal of the system response to the proposed action
Knowledge/experience/expertise
Training
Procedures
Time load
Cognitive biases (overconfidence)
Knowledge/experience/expertise
Training
Time load

Mapping Results for the CFM Delay Implementation

- PCs
  - Incorrect goals or priorities
  - Incorrect internal pattern matching
  - Incorrect mental simulation or evaluation of options
- Mechanisms
  - Goal conflict
  - Incorrect goal selected
  - Incorrect prioritization of goals
  - Not updating mental model to reflect changing state of the system
  - Inaccurate portrayal of system response to proposed action
  - Cognitive biases (overconfidence)
- PIFs
  - Knowledge/experience/expertise
  - Training
  - Procedures
  - System response
  - Awareness of consequences (perceived decision impact)
  - Time load
  - Resources

Gareth Parry, ERIN Engineering

QUANTIFICATION APPROACH

Overview of Quantification Approach

- For each sequence on the CRT that leads to the HFE:
  - Analyze the initial node to identify the relevant CFMs
    - Subsequent nodes are used to assess the potential for correcting the initial error in a timely manner
  - For each CFM, assess the contribution to the HEP using its Decision Tree (DT) – one for each CFM
    - DT path for a specific HFE determined by the characteristics of the PIFs as they relate to that HFE
    - The probability of each DT path is to be determined by an expert elicitation
  - The failure probability is the sum over all CFMs for all CRT sequences

Assessment of Potential for Correction of Initial Error (Recovery)

- Assessed based on an understanding of the plant status evolution following the initial error and the opportunities/prompts for reassessment of plant status
  - Opportunities captured in the nodes following the initial failure on the CRT
- Potential for recovery dependent on a number of issues, e.g.:
  - Nature of the initial error (CFM dependent)
  - The salience of any new evidence that challenges current mental model
  - The availability of a plan or procedural path for correct response given that it leads to a revision to the operators' mental model.
  - The arrival of the new information and its assimilation can happen in sufficient time to allow the correct response to be effective and prevent the HFE.

Quantification of HFE

- In the current version, recovery is addressed as a branch point on the DT when applicable

- Perform the following summation

$$\mathrm{HEP}(\mathrm{HFE}|\mathrm{S}) = \sum_{\text{CRT Sequence}} \sum_{\text{CFM}} \mathrm{Prob}(\text{DT path}|\mathrm{S})_{\mathrm{CFM}}$$

Construction of Decision Trees (DTs)

- Based on an analysis of the results of the literature survey
  - Cognitive mechanisms and PIFs
- Intention is that the complete set of Decision Trees captures the set of crew failure scenarios
- The branches of the decision trees address the PIFs that have an effect on the likelihood of the occurrence of the crew failure scenarios
- When applying the DT to a specific HFE, the direction taken at each branch is determined by analyzing the specific characteristics of the PIFs obtained during the qualitative analysis
  - Guidance in the form of questions, and issues to be addressed

An Example – DT for Delay Implementation

- CFM definition: The crew decides to delay implementation of the action such that the response is not successful
- The failure scenarios that are included
  - Believing that the function that is being addressed can be achieved by recovery of a system that normally performs that function without resorting to the action (e.g., believing AFW can be restored in time to prevent going to feed and bleed).
  - Distraction from competing demands
- No recovery other than the alarm
  - For this CFM, the crew knows the correct response, but have decided they will (and can) delay its initiation

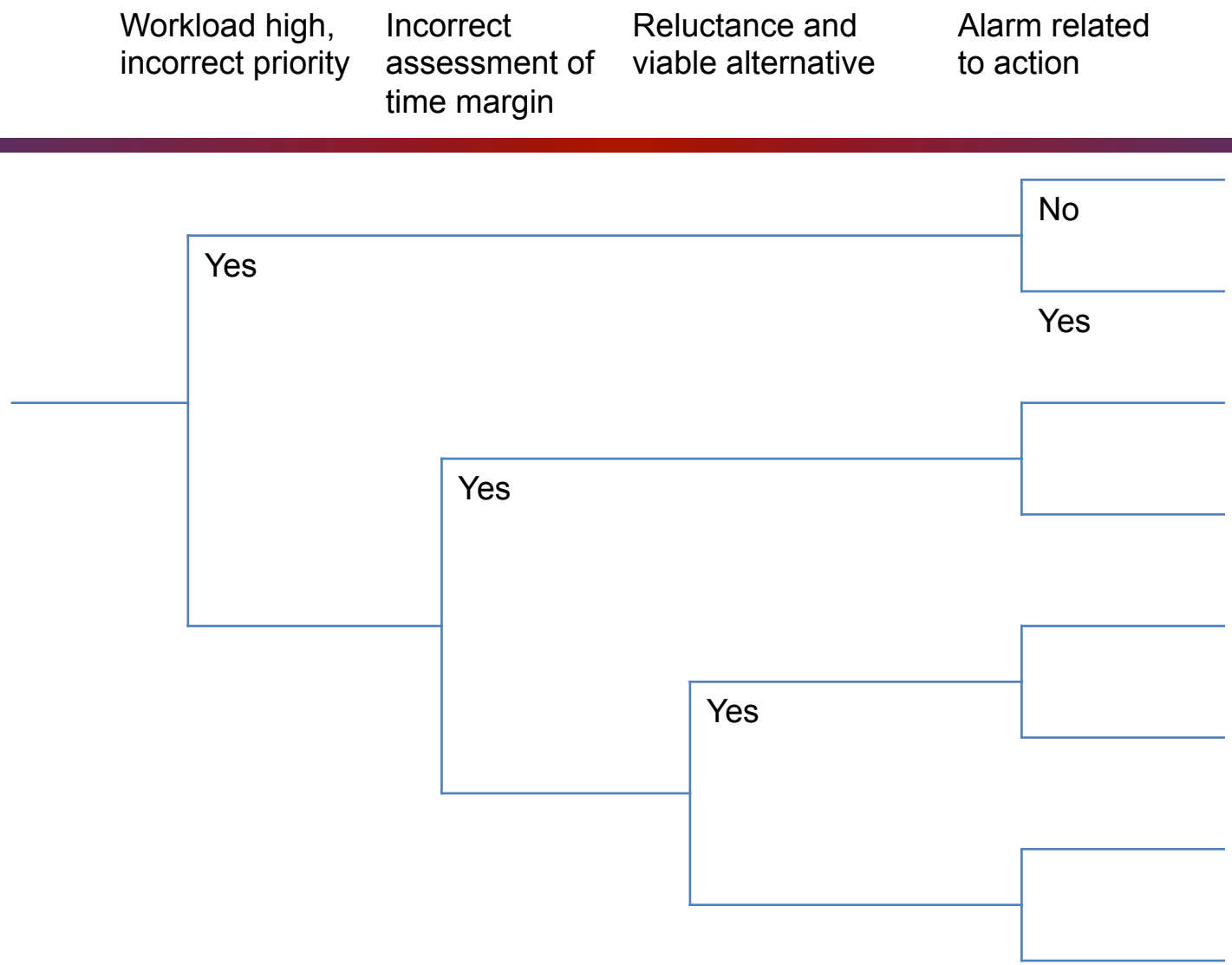

Decision Tree for Delay Implementation

Reduced CRT for Quantification - Example

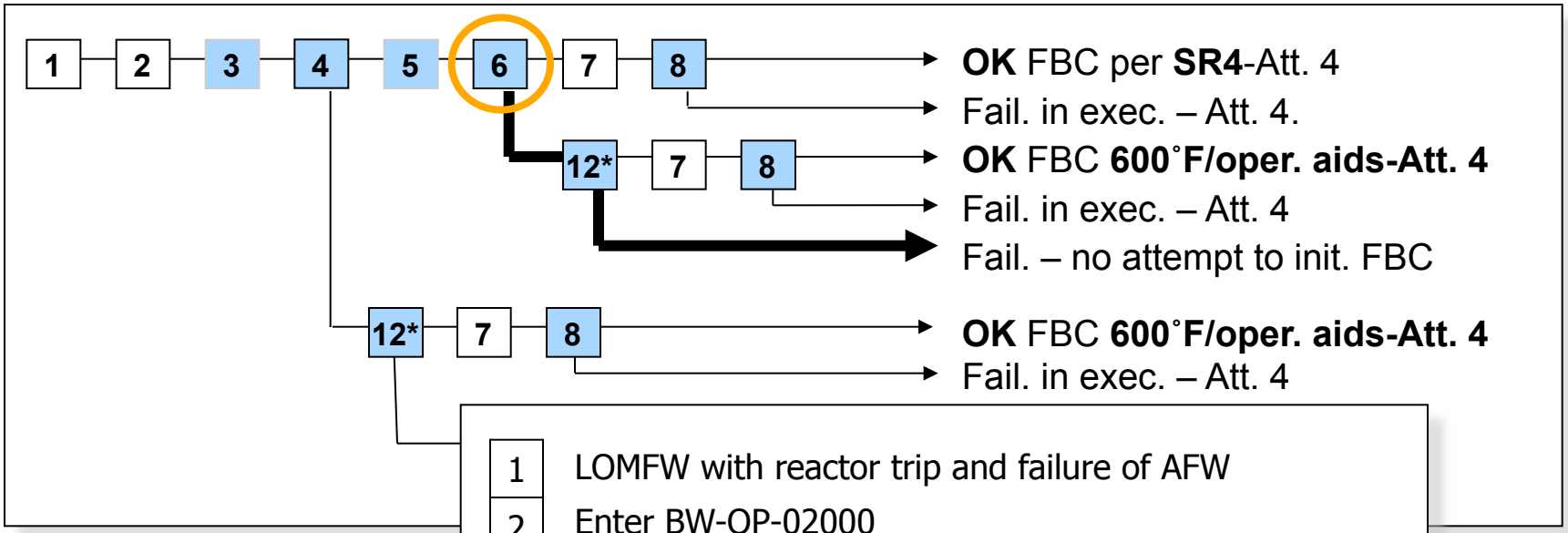

1	LOMFW with reactor trip and failure of AFW
2	Enter BW-OP-02000
3	Check specific rules (SRs) per EP 4.1 (initially)
4	**Address SG control per EP SR 4**
5	Recognize total LOFW per SR 4 (EP SR 4.1)
6	**Recognize need for FBC per SR 4 (EP SR 4.1.2)**
7	Enter Attachment 4 – F&B Cooling
8	**Initiate FBC per Att. 4**
12*	**Recognize need for FBC per oper. aids (*asynchr on 600˚F cue)**

B&W LOFW,
no MDFP avail
HFE: initiate FBC

Application of DT for Quantification of CFM

- Sequence beginning at Node 6
  - For each CFM applicable to Node 6, the PIFs are assessed and the appropriate path through the DT identified
  - Potential for recovery assessed for each CFM individually
    - For delay implementation, node 12 is not applicable, the crew is aware of the required response
    - For critical data dismissed or discounted, the cues are the same at nodes 6 and 12, so likelihood of recovery is small

Summary

- The quantification model consists of a set of decision trees
- Each CFM has its own DT
- The structure of each tree is based on an analysis of the result of the psychological literature, tailored to the nuclear power plant environment
- Guidance is provided for identifying the relevant PIFs at a node in a CRT and for determining the path through the DT
- The paths through the decision trees represent crew failure scenarios that specify how the crew failed and the specific aspects of the context that affect the potential for failure

Feedback?

- Staff presented an example to demonstrate the prototype of the Integrated Decision-tree Human Event Analysis System (IDHEAS)

- **Input requested from ACRS and stakeholders**

Backup Slides

Overview of the Literature Review

- Goals of the literature review:
  - Provide an up-to-date technical basis to underlie the HRA method
  - Organize the literature into a cognitive framework structure that can be used as a tool to inform HRA
    - Identify the causes, mechanisms, and influencing factors for failure of the macrocognitive functions

Overview of the Literature Review

- Reviewed psychological, cognitive, and human factors research related to five macrocognitive functions:
  - Detecting/Noticing
  - Sensemaking/Understanding
  - Decision Making
  - Action Implementation
  - Team Coordination
- Identified the processes and mechanisms required for humans to reliably perform these functions
- Established a link between the PIFs and causes of failure by identifying how the PIFs affect the cognitive mechanisms
- Organized all of the above information into the Cognitive Framework

Status of the Literature Review

- Products of the Literature Review
  - Cognitive Framework Trees = Complete
  - Appendix Tables = Complete
  - Supporting documentation (NUREG-2114) = Draft completed and under review
- Next steps:
  - Complete revision of NUREG-2114 (~February 2012)
  - External peer review (~March or April 2012)
  - Final revisions and publication (TBD)
  - Use literature review to inform decision tree development (in progress)