Official Transcript of Proceedings

NUCLEAR REGULATORY COMMISSION

Title: Advisory Committee on Reactor Safeguards
Radiation Protection and Nuclear Materials

Docket Number: (n/a)

Location: Rockville, Maryland

Date: Thursday, September 22, 2011

Work Order No.: NRC-1155 Pages 1-122

NEAL R. GROSS AND CO., INC.
Court Reporters and Transcribers
1323 Rhode Island Avenue, N.W.
Washington, D.C. 20005
(202) 234-4433

UNITED STATES OF AMERICA

NUCLEAR REGULATORY COMMISSION

+ + + + +

ADVISORY COMMITTEE ON REACTOR SAFEGUARDS

(ACRS)

+ + + + +

SUBCOMMITTEE ON RADIATION PROTECTION AND

NUCLEAR MATERIALS

+ + + + +

THURSDAY

SEPTEMBER 22, 2011

+ + + + +

ROCKVILLE, MARYLAND

+ + + + +

The Subcommittee met at the Nuclear Regulatory Commission, Two White Flint North, Room T2B1, 11545 Rockville Pike, at 8:30 a.m., Michael Ryan, Chairman, presiding.

SUBCOMMITTEE MEMBERS PRESENT:

MICHAEL T. RYAN, Chairman

J. SAM ARMIJO

DENNIS C. BLEY *

JOHN D. SIEBER

GORDON R. SKILLMAN

NRC STAFF PRESENT:

CHRISTOPHER BROWN, Designated Federal Official

JAMES RUBENSTONE

KEITH COMPTON

ROBERT EINZIGER

DARRELL DUNN

ALSO PRESENT:

YI-MING PAN *

ROLAND BENKE *

XIHUA HE *

TODD MINTZ *

JOHN KESSLER *

ROD McCULLUM

* Present via telephone

TABLE OF CONTENTS

Opening Remarks and Objectives 5

Staff Opening Remarks 6

Overview of the EST Project 9

EST Technical Issues Research Overview 12

Synthesis of Knowledge Gaps 87

Committee Discussion 99

P R O C E E D I N G S

(8:30 a.m.)

CHAIR RYAN: All right. The Subcommittee meeting will please come to order. This is a meeting of the Advisory Committee on Reactor Safeguards Subcommittee on Radiation Protection and Nuclear Materials.

I'm Dr. Michael Ryan, Chairman of the Subcommittee. Could I ask you on the bridge line to put your phones on mute? Excuse me.

The purpose of this meeting is to receive a briefing on the development of a technical basis for regulating extended storage and transportation of spent nuclear fuel.

The Subcommittee will hear presentations by and hold discussions with representatives of the NMSS staff and Research staff. The Subcommittee will gather information, analyze relevant issues and facts, and formulate proposed positions and actions as appropriate for deliberation by the full Committee.

Christopher Brown in the designated federal official for this meeting. The rules of participation in today's meeting have been announced as part of the notice of this meeting previously published in the Federal Register on September 8,

2011.

A transcript of the meeting is being kept and will be made available as stated in the Federal Register notice. It is requested that speakers first identify themselves and speak with sufficient clarity and volume so they can be readily heard.

We ask at this time that you silence your iPhones, pagers, or other electronic devices. Those of you that are on the bridge line, we ask you to silence your phone, as well.

John Kessler of EPRI has requested time to make an oral statement at the end of the staff's presentation concerning EPRI initiatives. John, are you on the bridge line?

MR. KESSLER: Yes, I am.

CHAIR RYAN: Welcome, and would you just say your name for the record, please?

MR. KESSLER: John Kessler, Electric Power Research Institute.

CHAIR RYAN: Thank you. Dr. Bley, a Member of the Subcommittee and the ACRS, is unable to be with us today in person but is also on the line. Dr. Bley, are you there?

MEMBER BLEY: I am, indeed.

CHAIR RYAN: Very good. Are there any

other persons on the bridge line?

MR. PAN: We have three SWRI staff calling from San Antonio, Texas.

CHAIR RYAN: Okay. Could you identify your names, please?

MR. PAN: Okay. My name is Hi-Ming Pan.

MR. MENKE: Roland Menke.

MS. HE: Xinhua He.

CHAIR RYAN: Thank you.

MR. MINTZ: And Todd Mintz also from the Center is also on the line.

CHAIR RYAN: All right. Thank you, very much. Just could you say the full name of the Center for the purpose of the recorder?

MR. PAN: Sure. Yi-Ming Pan, Y-I M-I-N-G.

CHAIR RYAN: No, no, no. I just need you to say the Center's name, not your individual names.

MR. PAN: Oh, I'm sorry. Center for Nuclear Waste Regulatory Analyses.

CHAIR RYAN: Very good. Thank you very much. That was helpful.

MR. PAN: Thank you.

We will add a second Subcommittee on this topic on January 18, 2012. Let's see. I didn't finish introducing all the members we have. Jack

Sieber, Dick Skillman, Sam Armijo are present as part of the Subcommittee today, and Dr. Bley is on the phone.

We will now proceed with this meeting, and I call upon Jim Rubenstone, Branch Chief in NMSS's Division of High-Level Waste Repository Safety to begin.

MR. RUBENSTONE: Thank you, Dr. Ryan. As stated, I'm Jim Rubenstone. I'm going to be giving the opening remarks on behalf of NMSS today. I'd like to start out by thanking the Subcommittee for this opportunity to come before them and present some of our plans going forward on the study of technical issues related to extended storage and transportation and some of the regulatory implications.

We're at the early stages of what is shaping up to be a multi-year effort to look at the potential technical and regulatory issues related to extended storage and any subsequent transportation following storage. Our focus is primarily on dry storage systems as the extended storage method.

This is complementary to other work that we're doing at NMSS to develop a basis for a further update of the Commission's Waste Confidence Decision the Commission issued in December of the Confidence

Update that extended its confidence that safe and secure storage will be available for spent nuclear fuel for at least 60 years following the life of the facility.

In support of that, we are working on an Environmental Impact Statement for extending that decision to period beyond the life plus 60. We're looking to open a dialogue today with the Subcommittee and the full Committee and provide information on staff's plans going forward.

There will be more opportunity for getting into the technical details of what we're finding in the January follow-up Subcommittee meeting that Dr. Ryan mentioned. At that point, we expect to have a wider agenda, and we'll have some industry and other stakeholder representatives at that meeting.

Today we'll have three speakers. This reflects both the multi-disciplinary and the multi-office efforts that staff is making on these things, these topics. We'll lay out the staff's plans going forward to define and address the potential issues, talk a little bit about the phased approach, and give some idea of what our schedules look to be at this point for various reports and opportunities for input.

Our first speaker will be Keith Compton.

He is in my division. He'll give an overview of the plans that we're doing and some of the basis for it.

Bob Einziger from the Spent Fuel Storage and Transportation Division will be speaking about some of the technical activities that are already ongoing on some of the questions that are coming up. And Darrell Dunn, representing the Office of Research, will talk about the scope and the tasks that Research is undertaking in this.

As I said, this is just the beginning of what's going to go on for some time, and we expect to be coming back to your Subcommittee and the full Committee many times and we welcome your input.

CHAIR RYAN: Thanks very much. Appreciate the introduction. With that, Keith?

MR. COMPTON: Thank you. Good morning. I'm Keith Compton. As Jim said, I'm with the Office of Nuclear Material Safety and Safeguards with the NRC.

For the last few years I've been working mainly on performance assessment issues at Yucca Mountain, but I'm getting the chance to branch out into other aspects of spent fuel management. In particular here, I've been working with Jim and Bob, Darrell, and other members of our team as a

coordinator for some of the work that we've been doing on extended storage.

There's two objectives, two things I'd like to accomplish in my talk today. This session, as we said, is the first of several meetings that we hope to have over the next few years with the ACRS on technical issues associated with extended storage, and this is really, therefore, a kick-off meeting that will give you some of the background and the context for the project.

The first thing I'd like to do is talk about the purpose and the plans for the overall EST project, and I hope that will give you an understanding of the overall process that we're planning on following.

Again, we're hoping that these early discussions will make our later and more focused discussions more useful, because it will give you an idea of what we're planning to do and when and what we're focusing on. The second goal is to talk about what kind of inputs we'd like to get from ACRS on the project and how and when.

So, first off, some background on why we're doing this work. There's been a number of recent events that have highlighted the importance of

storage and disposal of spent nuclear fuel, and although the specific direction of national policy for the back end of the fuel cycle continues to evolve, there are certain aspects that are pretty clear.

It's becoming more and more clear that spent fuel may be stored for longer than originally planned while a new national policy is being developed and implemented. We need to ensure -- we, the NRC, need to ensure that our regulatory framework can accommodate the potential for extended storage of spent fuel, as well as its subsequent transportation for reprocessing or disposal.

In 2010, the Commission requested that the staff, among other things, undertake research to bolster the technical basis -- technical bases of the regulatory framework in support of extended periods. In June of 2010, the staff prepared a plan that would enhance the technical and regulatory basis for the existing regulatory framework to support extended periods of storage and transportation.

Around that same time, the Commissioner affirmed its confidence that spent nuclear fuel can be stored safely and securely without significant environmental impacts for at least 50 years after operation at a nuclear power plant.

They directed the staff to develop a plan for a longer term update to the Waste Confidence Rule, and then the Commission directed the staff to come up with a plan for that update and to address the integration of the work that we were doing for bolstering the technical basis for extended storage, as well as updating the Waste Confidence Decision. This will begin our initial work.

Some of the needs, as we look at our technical and regulatory issues and as we engage our stakeholders, we may find that we need to update regulations or guidance or possibly both. We may also find that there are opportunities to improve integration between our storage and our transportation regulations.

The thing that I'll hopefully continue to emphasize is that the basis for these changes is a thorough examination of the technical issues associated with extended storage, coupled with an understand of the safety significance of those issues. Our initial work is therefore focused on a clear understanding of what those technical issues might be.

CHAIR RYAN: As you go through your presentations today, we'll hear a little bit about what some of those might be or how they're shaping up,

that kind of thing.

MR. COMPTON: Yes. Well, a little bit on mine, and then I think we'll be --

CHAIR RYAN: Okay, good.

MR. COMPTON: -- talking more as we go along.

MEMBER ARMIJO: I'd like to -- I've got to get this out. You have a Waste Confidence Rule that says you're okay for 60 years after the shutdown of the plant.

MR. COMPTON: There is a Waste Confidence Decision, which is a generic finding under NEPA, and this is related to reactor licensing.

MEMBER ARMIJO: Right.

MR. COMPTON: That is -- the words are that they have confidence on a generic basis that waste can be stored safely for at least -- I think the recent update is at least 60 years following operation of the reactor, but they directed us to look at longer periods.

MEMBER ARMIJO: Right, I know, and you have to respond to their direction, but it seems to me a little early to start on something that's not going to be required for a long, long time, assuming you have confidence today in the storage.

MR. COMPTON: Well, the --

MEMBER ARMIJO: It worries me that when you have that much time, there's an awful lot of stuff that's done that's wasteful, time-consuming, and really doesn't need to be done for quite a long time. I'd like to understand, you know, what is -- if there was -- if there's some time-dependent problem that you need to work on that you would start doing today, even if you didn't have Commissioner direction to go ahead and start on -- start on this work.

MR. COMPTON: I think this is -- this is a good question or comment, and I think that's precisely why we're doing the work. That's why we're starting off, and, again, the first task that we're doing is trying to look and see what --

what we find is that we may be faced with storage that is longer than original envisaged, so the task is to, particularly in the EST program, which is what I'm focused on -- we have other staff that's more focused on the waste confidence, but the thing that we're doing is trying to understand exactly that.

Is there anything that may come up, and when would it come up, and when might it pose a safety issue? That's in large part, I think, the objective of what we're trying to accomplish right now is to say

-- and we don't know -- I don't know right now what the answer to that is.

I don't know if there are issues that are, you know, that are going to come up in 300 and 200 and 10. You know, the even the boundary between extended storage and current storage is not a hard and fast line.

We might set something for our planning purposes, but, you know, again, this goes -- and I think it underscores the importance of really getting an understanding of what kinds of phenomena may occur technology, you know, material-type phenomena, what might occur over longer and longer time periods. So that is exactly what we're trying to do is to figure out what we might need to be looking at.

MEMBER ARMIJO: Yes, at some point one of the things that would help me a lot if the staff could provide is a chart showing the function of time, the temperature, radiation levels, all that stuff.

MR. EINZIGER: I think I'll get into that a little bit more.

MEMBER ARMIJO: Yes, in some sort of a quantitative way so you say, you know, what's happening to the material that's inside those storage containers as a function of time and what's the risk

that you see --

MR. RUBENSTONE: if I could just --

MEMBER ARMIJO: -- because I think part of the problem I have is I see the risk decreasing with time rather than increasing, and you obviously don't share that.

MR. EINZIGER: Sam, in my presentation I'll present a number of issues that have already started to cross over between current storage periods and extended storage periods and also bring up another couple reasons why we're starting now, as opposed to waiting.

MEMBER ARMIJO: Okay. Thanks, Bob.

MR. RUBENSTONE: I just wanted -- this is Jim Rubenstone. I just wanted to clarify something. I may have added confusion by talking about the Waste Confidence Rule. The Waste Confidence Decision is a generic finding that waste can be dealt with, basically, and doesn't have to be considered as part of the re-licensing process for power plants or licensing of new plants, for that matter.

The current framework for licensing of dry storage is that there is an initial license period and then a renewal period, and at the time of the renewal the applicant comes in with an aging management plan

to support the fact that they can continue at its now 40-year increments for the renewals. So, the years don't always match up exactly, and we're looking at issues that may come up in the further renewals of the dry storage.

MEMBER ARMIJO: Okay, one last thing. Within that, is transportation still okay? Is it okay to transport this fuel within this 40-year period? Is that covered?

MR. EINZIGER: The answer to your question, Sam, is yes and no.

MEMBER ARMIJO: That's what I was afraid of.

MR. EINZIGER: Right now, we have license systems for transporting low-burnup fuel, and by low-burnup it's the arbitrary cutoff point of 45 gigawatt-days per metric ton, that arbitrary point being picked because that's where the knee in a lot of the properties affecting the performance start changing.

The database for transporting higher burnup fuel in larger casks like they're currently being stored in is not there yet. That's why, except in some exemption situations, we have not licensed transportation of high-burnup fuel. There currently are at least two cases at the agency looking for

licenses that are bringing up a number of questions with no answers yet.

Now, I want to stress that doesn't mean we can't transport high-burnup fuel. If we want to go to smaller casks, the 2s, the 7s, we can transport high-burnup fuel. We just don't have the database right now to license transporting a cask with 37 Ps or 68 Bs.

MEMBER ARMIJO: At the high burnup, 16.

MR. EINZIGER: At the high burnups.

MEMBER ARMIJO: All right.

MR. EINZIGER: So it's sort of an iffy situation.

MEMBER ARMIJO: Thank you.

MEMBER SIEBER: But it is feasible to transport smaller numbers of fuel assemblies, even with the high-burnups, correct?

MR. EINZIGER: Correct.

MEMBER SIEBER: That's pretty much the way the Navy did theirs.

CHAIR RYAN: Carry on.

MR. COMPTON: So, again, thanks. This is the kind of discussion that we wanted to be able to have now, just so we understand why we're doing what we're doing, but to get back, the approach that we're

taking is basically a stepwise approach, and the first, as we just talked about, is that we really need to understand what the technical issues actually are.

For example, we'd want to understand what kind of degradation phenomena might develop over what time period and when, if ever, they might pose a safety issue. For those that might be of regulatory significance, we would look to carry out some focused research to improve our understanding of the phenomenon or to leverage the work that others such as DOE or the industry might be doing.

I would emphasize that any of the work that we would -- that NRC would conduct would be in support of our regulatory mission. It wouldn't be our position to carry out research to solve the operational problems. We would focus on the knowledge that's needed by the regulator, and I think Bob's going to pick up on that. That's going to drive kind of our focus.

We'd also need to look at our regulations and our guidance in an open and transparent manner to see what, if anything, might require revision to accommodate extended periods of storage. We may find that parts of the regulations require revisions, or we might find the existing regulations are adequate to

handle multiple license renewals.

We may find that aspects of our guidance documents need to be revised or that we need to develop new guidance to address new phenomena. We may find that we need to develop staff capabilities to ensure that we have the skill set necessary to effectively review and oversee activities associated with extended storage and its implications, as well, for transportation and for ultimate disposal.

So, again, going on with plans, consistent with this approach we laid out a phased plan in SECY-10-0007, which is the document that was put out in June of 2010. The outcome of Phase 1 activities would be explicitly identifying the technical and regulatory issues. The focus of most of our discussion today will be our progress on a report that would identify the technical issues that we would consider to be of regulatory significance.

We plan to issue that report for public comment this fall, and that would then be out and available for ACRS to look at. That would be the first report we'd be asking for your input on, and we'd hope to come to you again in January, I think, is when we're planning to talk about that in more detail once that report has actually been completed.

Phase 2 would start with a more detailed plan to carry out the necessary research and analyses to address the gaps that we have identified in Phase 1. I should note that we've already begun some of our initial planning focusing on phenomena that we're confident are likely to be of regulatory significance, and I think Darrell's going to talk a little bit more about that.

That work will take several years, and that would be documented in a report or possibly in a series of reports, and we anticipate that the outcome of those activities would also be the subject of future interactions with ACRS.

I would note that this is also an area where we expect to integrate the work of this group, the EST group, with the work on waste confidence as we resolve or gain knowledge on these technical issues, we would be ensured that anything that we learn either from our own work or from following the work of others would be fed in and inform the work that's going on in the Waste Confidence Update.

Phase 3 and 4 would comprise the development and implementation of specific regulatory options should those prove to be necessary, and those activities are several years off, since we do need to

finish our technical and regulatory gap assessments and then complete the work needed to resolve any issues that were identified.

To get an idea of the time line, this time line is consistent with the milestones that we've laid out in the two SECY papers, SECY-10-0007 and SECY-11-0029. As you can see, this is a pretty long-term effort, and we're only at the beginning of it. I think that goes a little bit to what I was saying earlier. We're in --

CHAIR RYAN: Just for clarity, Keith, I think you touched on this in preparation for this meeting -- this is Slide 6 for those that are on the phone -- that this is really kind of the very top line of your planning, and you're at that stage. You really are -- you're beginning to, you know, plan the detailed activities that will come under each one of these categories or activities, correct?

MR. COMPTON: That's right. That's the -- what was my first sentence is that we're at the very beginning, and I appreciate it, because that is kind of the point. We're at the very beginning of this process, and we're developing those plans.

What we're doing right now, what we have planned out in more detail, is the technical gap

assessment, which, as I mentioned earlier and I'll probably mention again, is we're planning to put out this fall, and, again, we'll talk with you about that.

We'll finalize -- that'll be put out for comment. We're going to finalize that this spring, and then -- in May, I believe, and then in April we plan to put out our plan for -- essentially, we've set the issues up, and then we'll set out a plan for knocking them down.

Then, also next year we would start looking at some of the more regulatory issues starting next year, but as you can see from this is that the issue resolution phase is kind of the long leg in this process.

We'd be reporting on our progress by a couple of vehicles. First, we would document for comment the work that we would do to address technical and regulatory gaps. Again, since we haven't finished our initial gap assessment, I can't provide the exact schedule for specific reports and exactly how we're going to put them out, but we would be sure to keep you informed of what our specific plans are so that you would have plenty of time to know what's coming.

In addition to any issue-specific reports or compilations that we'd be putting out, we're also

going to be issuing an annual status report to the Commission in December of every year, probably not this December, because we haven't put our plan out, but after that there will be this annual status report that comes out.

Finally, if we learn anything during the resolution phase that would suggest that there's previously unidentified issues, we would ensure that that information is disseminated so that everyone is aware of it.

Again, as you can see, and I think this may go a little bit to the question earlier, any specific regulatory work, any actual action we would take with regulations or guidance is several years. Again, because it's so far off, we don't have any specific plans to offer, but, again, we'll be sure to keep you informed of plans as we develop them so that everyone would have plenty of time for comments.

MEMBER SKILLMAN: May I ask a question, please? I'm Dick Skillman. What you've presented here is a time line of seven years, and in the nuclear industry that is half a generation. That is a huge amount of time. What are the pressing industry needs right now where an applicant or a licensee would say, "I need help how. Please help me"?

MR. COMPTON: Again, I'll give an answer to that, and then I'll let Bob jump in if he wants to. Again, right now our -- SFST is currently doing work on the current -- the current day licensing issues. Our purview is really looking at the really long-term, the things that are out, you know, not just the next decade or even the next half-century, what might develop over, you know, 100, 200, 300 years.

So, as far as any kind of current pressing issues that may be being faced that are being worked, I would let Bob take that on but note that we're interacting with the so that if we find, for example, anything that would suggest that there is anything that is of not a 50-year or 100-year issue but, in fact, is an earlier issue, we would share that with the people who were doing the more regular, the more short-term licensing.

I don't know. Bob, do you want to add anything to that?

MR. EINZIGER: Yes. As I mentioned before, there's at least two license applications in right now for high-burnup fuel, and we don't have the -- industry does not have the database to support that. One of the things that we're looking in this extended storage program is what issues would there be

with examining fuel and getting some of that database, so there's an overlap there.

Another issue that has come up recently that you might have heard of at the Idaho site, the TMI fuel is stored in concrete bunkers that two years after the bunkers were built started to start spalling. An issue with the concrete degradation, it occurred earlier than expected.

Now, one of the issues that we're looking at in extended storage is concrete degradation. Obviously, there is an overlap there, so there's work being done in this that's going to affect that current situation.

Also, there is the issue that was first identified in Japan of the degradation of the stainless steel canisters in a coastal environment due to stress corrosion cracking. Currently, we think that that's an issue that will not affect things until an extended period of time, but depending upon what the situation is, they could possibly affect things earlier.

Due to the work that's being done in this program, the industry is moving ahead with starting to examine some of those canisters in detail for signs of this effect occurring earlier than expected. So

that's three areas where work that's being done in the extended storage is merging with the work that's being done in current storage to tackle problems.

MEMBER SKILLMAN: Thank you. Thank you.

MEMBER ARMIJO: Well, I'm kind of like Dick. I come from an industry background, and my first -- when I look at a program plan, and I've been in charge of R&D at GE years ago, and the first question I ask is, "Why does it take so long? Why does it cost so much?"

It seems to me that the -- you know, as w ego through the presentation, I want to understand your views on that, because it seems to me that you've got some cask issues that are amenable to, you know, mitigation, chloride stress corrosion cracking. The industry knows how to deal with that.

You've got cladding issues, which are a little more difficult to deal with, but that, I believe, is in your plan to look at it periodically to see what the properties are. It's a function of time and temperature, and to me that's a long pull.

I don't know how long it is, but it's a long pull, and it's probably the most expensive work, but I'd like to understand what's really driving this schedule to take so long and really cost so much

money. That's beyond our purview. Our responsibility is safety, but it seems to me that this program is just taking too long.

MR. EINZIGER: Sam, you and I both come from the time when there was lots of money around. There was lots of facilities around. There were lots of people around, and we had problems back in the eighties. We jumped in, and we tackled them, and in the seventies we tackled them and got them done.

Unfortunately, that's not the situation in the United States and in the world right now. We don't have very many hot cells in the United States that could handle assemblies. We have a situation of permitting and moving of fuel that is taking years to get settled.

We've had a program at Argonne that was started when I was there in 1998 to look at a fairly simple issue of hydride reorientation. It is now 2012, and due to changing regulations, limitations, things, that's dragged out probably three times the length of time that it should have been. Unfortunately, things are just taking extraordinary lengths of time now that they shouldn't take if there was a commitment to solve these issues.

MEMBER ARMIJO: That's probably the best

answer I -- that's a good answer, because there's no technologic --

MR. EINZIGER: They don't --

MEMBER ARMIJO: There is no technical problem that I can see. For example, if you had to wait a long time for this degradation to occur and you're simply waiting, but, you know, there's been high-burnup fuel sitting out in maybe in pools, maybe not in dry storage casks that are amenable to examination and testing, but you're saying that just getting it done is painfully slow.

MR. EINZIGER: Well, no one will accept fuel unless there is a disposal path for it. We have no disposal path for it.

Recently, Idaho has amended their agreement with the government allowing more fuel to be brought into the state for purposes of research, but it's still a very limited amount. It's an amount that not --

It's not that we have the ability to bring in that full inventory. That inventory, which I think is on the neighborhood of three-quarters of an assembly a year at the most, has to be divvied up among us, the people who are looking for lead test assemblies examinations that are looking for anything

in the nuclear industry. I mean, if we had the strong commitment to the nuclear industry that we had back in the early seventies when you and I were doing research, things would move a lot faster.

In terms of the schedule that Keith put there, if he had given this presentation probably two months ago, that schedule probably would have been cut by at least two years. Before Fukushima, I think the date was 2016. All of a sudden, you know, with resources changing priorities, things are being drawn out.

One of the things I'm going to talk to is -- about is a demonstration program that we're going to look at. My estimate to put that demonstration program in place is just a minimum of five years of just seeing who can do it, getting through the paperwork, and all these various commitments. Back in the days we were doing it, there wasn't that issue, and so things are taking -- just taking a lot longer than we would like them.

MEMBER ARMIJO: Do we have -- you know, one of the things we can comment as the ACRS, and whether the full Committee would want to do that, is on actually resources to be able to do this stuff in a timely and cost-effective manner. The Commissioners

may or may not have some clout in that area or may or may not be interested, but certainly Department of Energy should have some interest in that.

I know that, at least I was told, that the Oak Ridge hot cells had been upgraded to handle full-length assemblies, large assemblies. You know, if this is important work, I would think you'd get some priority and you could get it done, assuming that material is ready for examination. You know, I don't know if you've got adequate samples.

MR. EINZIGER: The Oak Ridge hot cell, they have refurbished two hot cells that they are capable of mating up with one particular type of cask and bringing one assembly into that hot cell. I don't know that they have the capability in that hot cell to examine that full fuel assembly.

I know that we have a program going on with Oak Ridge to look at the effects of normal transportation on fuel rods and look at the vibration effects, and it's been over a year just trying to get the plans in place and everything in place to build the apparatus to put in the hot cell.

I think that, as far as I know, the DOE is committed to using the Idaho National Laboratory as their prime laboratory for nuclear energy. There has

been a meeting approximately, I guess, about six months ago where they gathered people, and we put input into it on what we would like to see in terms of a facility to be built out there to examine fuel.

Where they're going with that, I haven't heard any update on that. They are looking at it. I don't know what their budgets are. I know that when we were looking at developing a new fuel and taking it from the conceptual stage through the building, testing, examining, we were probably talking $100 million back twenty years ago.

MEMBER ARMIJO: That's in today's dollars.

MR. EINZIGER: Yes.

MEMBER ARMIJO: Because I did exactly that 30 years ago, okay, and we shipped fuel, highly irradiated fuel segments, from the United States through to Sweden for ramp testing, shipped them right back to the United States for hot cell examination, and we did that over and over and over again.

The budgets were comparable for that entire program to what I've seen in your budgets here, so something is -- something is really holding up progress here, and --

MR. EINZIGER: What I'm saying, Sam --

MEMBER ARMIJO: -- I just think it's --

MR. EINZIGER: -- is that same price is being used now to develop a whole new reactor system, so there's a mismatch. In terms -- I can't comment on the amount of money that's in here for the total work. I know that we don't have that money committed to research.

MEMBER ARMIJO: Well, that's the other question. I noticed that you had a budget, but you only got half of it for 2011. Somewhere in your documents it said, you know, the budget was $4 million. You got two or something like that, so is this schedule going to slip out even further with --

MR. EINZIGER: Sam, I get money when I don't have scope. I have scope when I don't have money. Getting the things matched up is a major effort. We had money this year to do work before we were ready to start the work. We were just in the planning, and when we come ready to do the work, the money --

MEMBER ARMIJO: May not be there.

MR. EINZIGER: -- may not be there, so --

CHAIR RYAN: One thing as a background document, perhaps, or as a document we can -- a few sheets of paper is what I'm thinking -- is to maybe address Sam's question, which I think is a good one,

is what, you know, is the scope that's developing?

We really don't need to be regaled with all the details of funding, but where are you well funded, and where are you waiting for funding? I mean, those are the basic questions.

MEMBER ARMIJO: Technically, you know, assuming that you had adequate funding, how quickly could you get it done? Is it a matter that's, say, "Gee, the samples just aren't ready?" For example, they had to be in the reactor for a certain length of time.

CHAIR RYAN: I think that's what I'm --

MR. EINZIGER: If everything went perfectly, we wouldn't need any funding. We would identify the issues that the industry had to solve.

MEMBER ARMIJO: Well, that's another question, you know, because, you know, the industry has an obligation here, and I'd like to hear and maybe at the full Committee what industry, EPRI, and others are doing.

CHAIR RYAN: In fact, they've asked for the time to speak, Sam --

MR. EINZIGER: If you'll just hold off-

CHAIR RYAN: -- excuse me -- to talk about --

MR. EINZIGER: I'll talk about that a little later.

CHAIR RYAN: Industry will be at the full Committee meeting. They've asked to be present for their comments.

MR. EINZIGER: I'll talk about that just a little bit later.

MEMBER ARMIJO: Okay. I just wanted to get all that stuff behind me, because, you know, I'm just sitting here very frustrated, saying, "My gosh, why does this take so long and cost so much?" I've been looking for a technical answer, but the best answer seems to be these are administrative and process problems more than technical problems, and I'm sure you're just as frustrated as I may be, but --

MR. COMPTON: That's part of the answer. The other part, and, again, that kind of goes back, and, again, this context discussion is that this is the plan that we have developed, and, actually, this reflects a plan that was developed several years ago.

I would point out that kind of that key milestone is this spring when we finish our Technical Issues Report, and then we're all hopefully somewhat on the same page with what the issues actually are. Then, as I said, the next step is to actually come up

with a plan.

I think at that stage we'll be in a lot better position to be able to really talk to kind of a technical basis for, you know, what's going to get done, how long is this piece going to get done. It may be that 90 percent of the work can get done in a very short period of time, but there's one project that ends up being a long leg, and I think that some of those --

I understand your concerns, but I think that that's why we'll say that will be coming. We're not quite at that stage yet, because we do need to make sure that we take it a step at a time and get the technical issues down, and then we can move forward.

CHAIR RYAN: So is it fair to say that sometime in the next meeting in a few months we'll hear a little bit about it, and then maybe in the April time frame we'll have a better understanding of tasks and schedule and facilities and strengths and weaknesses and all of that?

MR. EINZIGER: I'll tell you where we are when I talk and where I expect to be.

CHAIR RYAN: Okay. Fair enough.

MR. COMPTON: And then, to a certain extent, as I said before, some of the things that we

know about we have started working on that, but, yes, I think that's the thing. We can start moving into those kinds of discussions in a certain time.

CHAIR RYAN: Okay.

MR. COMPTON: I made a note that that's a point. So I'm going to turn now to some of the specific Phase 1 activities we're pursuing.

A number of organizations have produced assessments of the technical basis for extended dry storage of spent nuclear fuel. We're staying on top of ongoing work that's being done by groups such as the Department of Energy, the Nuclear Waste Technical Review Board, and the EPRI Extended Storage Cooperative Program.

In identifying these issues, we would want to understand the impact of extended storage on our aging management programs for storage. Bob is going to be talking about some of that work and also about how we're engaging some of those other groups that are focused on improving our understanding of technical issues.

Right now, we're currently working to review and synthesize several of those reports, several of the material that's been put out, to identify those issues of regulatory significance.

Right now, the Office of Research has the lead on synthesizing some of the more important reports and information, and that's what a large part of what Darrell's going to be talking about today is what we're looking at and then how we're putting that together.

Again, as I said earlier, we're going to put out a draft synthesis of the technical issues for public comments this fall, and we'll finalize it in the spring. Again, we'll come before you in January, along with, probably, a number of other groups, and that's when I think we'll really be able to talk to the details on a lot of the technical issues. Again, we would want to have your comments before we finalize that report, because that would go into -- that goes into making a plan, as we discussed.

The basic approach, and I think Darrell's going to talk about that in more detail, is to try and understand what degradation phenomena affect what dry cask storage safety systems. They key components of a dry cask storage system are the fuel cladding, the canisters, and the over packs.

Although the gap assessment is ongoing, and so I'm not going to talk in technical detail about what we're doing right now, I'd give you an idea, a

flavor of the kinds of issues we'd be examining. Then we've actually already started discussing some of those, what some of those issues are, but I'll go ahead and just go through these briefly.

CHAIR RYAN: Slide 8?

MR. COMPTON: We're on Slide 8. For cladding, again, the safety functions are confinement, fission product barrier, and then physical integrity, which is important for retrievability, as well as geometry control for criticality.

Some of the issues that we may need to deal with are -- again, we discussed some of this -- the issues associated with higher burnup, as well as the variability in the cladding materials and production methods.

There's a number of different materials and methods out there, and we have to understand the implication of that variability. In addition, the ability to monitor fuel and cladding within sealed canisters would improve our ability to implement an aging management program for those components.

Likewise, the canister is an important component due to its --

CHAIR RYAN: Slide 9?

MR. COMPTON: Slide 9.

CHAIR RYAN: Sorry.

MR. COMPTON: Okay. Due to its ability to maintain an inert environment for the fuel in cladding, its ability to prevent water leakage that could provide a moderator source, and its ability to prevent releases from damaged fuel.

We need to understand corrosion mechanisms that might become important as time passes such as the stress corrosion cracking of stainless steel in marine environments, as well as any time-dependent changes in basket materials or neutron absorbers.

Slide 10. Finally, the overpack provides critical shielding and heat transfer functions, and the ability of concrete overpacks to maintain long-term integrity, their responses to external events is something that we need to understand.

As I said earlier, the specific examples that I just mentioned and that we've been talking about are just an indication of the kinds of issues and challenges that we would be examining as we identify technical issues for resolution. There may be other issues, or we may find that some of these issues are not particularly safety-significant.

Slide 11. Although the focus of our initial report is on the technical issues associated

with material degradation phenomenon, I'd be remiss if I don't tie those discussions in with the regulatory context, and so I'll talk a little bit about the current regulatory context.

The current framework for spent fuel storage relies on the use of renewable licenses. Our regulations provide for an initial license term that can be renewed for a defined period. A key aspect of this approach is the use of an aging management plan to ensure that the intended functions of the storage systems are maintained during the licensing period.

These plans typically involve time-limited aging analyses, which would be an analysis of the effects of aging on the structures, systems, and components that have a defined service life. When necessary, those analyses are complemented by aging management programs that ensure aging effects don't result in a loss of the intended function.

There are several elements of aging management programs. Prevention and mitigation programs eliminate or slow the effects of aging, for example, coatings to prevent corrosion of metal casks, cathodic protection systems that minimize corrosion.

Likewise, monitoring programs can identify aging effects, as well as verify the ability of

structure systems and components to perform their intended functions. For example, concrete structures can be visually inspected for cracking, and radiation monitoring can verify the performance of shielding materials.

Slide 12. There are, however, a number of regulatory issues that might need resolution. One of them is the issue of integration between the different phases of the back end of the fuel cycle, particularly storage and transportation, and we discussed this already a bit but, for example, casks that are loaded with high-burnup fuel, given issues associated with high-burnup cladding integrity, particularly following extended storage. There are uncertainties associated with the transportability of high-burnup fuel.

Likewise, NRC generally requires cladding integrity to be maintained during interim dry storage, and although we believe that cladding integrity should be maintained to the extent practical, we recognize that uncertainties in maintaining integrity in extended storage scenarios might require the consideration of new mitigation solutions such as repackaging, canning of spent fuel in existing cask designs, or monitoring systems to assess the state of the fuel and cask internals.

Finally, the current approach for financial assurance presumes that dry cask storage is an interim solution until DOE accepts the fuel for shipment to a permanent repository. Right now, the national policy for spent fuel dispositions is uncertain, and it's unclear who might be funding the extended ISFSI operations. Staff might need to consider how licensees will finance operational expenses for uncertain lengths of extended storage.

Again, this is getting more to the regulatory side of things, distinct from the strictly technical. I note that there may well be other issues that would arise as staff examines the regulatory structure, as well as interacting with all of our various stakeholders.

I'd like to close. Slide 13. I'd like to close that our -- by emphasizing that our regulatory role is not going to be to control the direction of the national program by, for example, recommending whether spent fuel should be stored for extended periods.

Our job is to effectively and efficiently support the national program with timely, technically sound, and stable regulations that would assure safety, security, and environmental protection, so

this is an important message for us is that we're not advocating. We're getting ready if the eventuality arises.

We're starting off on an effort to enhance our regulatory framework to support extended storage should that need arise. The basis for our efforts is a thorough understanding of the technical issues that could arise under the conditions of long-term dry storage.

The process of identifying issues, carrying out research, following the work of others to address issues of regulatory concern, that process right now, to the best of our knowledge, could take several years, and we do expect to be having interactions and getting input from ACRS over that whole process.

Again, as I mentioned, the first specific example where we're going to be looking for input is on our draft technical gap assessment that will be issued for public comment this fall. We want to come back to you in January to talk about the content of that report in more detail, but in the meantime Bob is going to give you some background on the technical work that's been done not just here but elsewhere to date.

Darrell is going to talk about -- is going to provide an overview of the Office of the -- the Office of Research to synthesize the existing information base to help us identify key technical issues. That concludes my presentation, and I'd be happy to take any more questions.

CHAIR RYAN: Okay. So, just to summarize, I think it would be helpful. The time line that you showed us is really just a thought process at this point. This is what you want to touch on as time goes on.

MR. COMPTON: Right, and I think it gives an idea of the -- and that's going to be subject to change as budgets come up.

CHAIR RYAN: That's very important, and I guess the phase that I read that we're at now is that you're really just now getting into the detailed technical planning for this longer term horizon, and then comes the costing and all that that goes with it. Is that a fair way to sum up where we are?

MR. COMPTON: That's actually right, and that's why we're coming in. Again, as I said, this is really a kickoff to let you know that we will be talking to you again, but you have an idea so that we're kind of aligned in terms of expectations and a

little more --

CHAIR RYAN: So, I guess, I'll take away, and, Sam, maybe you agree, but I think the idea is you're really going to come back in the next couple of meetings and begin to put the meat on the bones that addresses Sam's more, "What's the technical plan?" Is that fair enough?

MEMBER ARMIJO: Right. Right. I'm more interested in that, obviously, and, again, why it takes so long and what we really don't know that we need to know to put this to bed. Some of the problems you mentioned, Bob, I just don't think don't take all that -- you know, chloride stress corrosion cracking of stainless steel in coastal environments, you know, there's a number of practical remedies for that to mitigate that sort of stuff if somebody had that --

MR. EINZIGER: Well, I'll talk a little bit more about that, Sam.

MEMBER ARMIJO: Okay.

CHAIR RYAN: All right, so you're going to get into the technical areas.

MEMBER ARMIJO: Whether we like it or not.

CHAIR RYAN: No, I think that's important, so I just want to -- I think from one aspect we appreciate the fact we're getting this very early in

global picture from a higher altitude than we normally work but that we are going to drill down into the technical issues --

MR. COMPTON: That's absolutely the case.

CHAIR RYAN: -- as time goes on in a proactive way and so forth, so that's very good. Thank you.

Next on the agenda, Bob. You're up. Dr. Einziger, let me ask you. Would you like to take your -- we can take a break now or after you talk.

MR. EINZIGER: No, this is fine.

CHAIR RYAN: Okay, great. I just want to make sure you're comfortable.

MEMBER SIEBER: Mike, maybe you can answer a question for me. When you were talking about super long-term storage at Yucca Mountain, did you worry about things like clad integrity, or did you rely on the canister for the --

MEMBER ARMIJO: Yes, that was one of the concerns, but the canisters were designed to accept.

MEMBER SIEBER: I didn't say you didn't care. What happened to the internal structure of the fuel assemblies itself?

CHAIR RYAN: I think a predicate there is that the canisters, once in, were probably not going

to be unloaded. I mean, the fuel degradation question I think is much more of a question if you have a plan to unload a particular canister.

MEMBER ARMIJO: Or transport.

CHAIR RYAN: Or transport it, yes, or both.

MEMBER SIEBER: If you're planning on handling and manipulating this stuff at any time once you place it, then all these structural issues become very important.

MEMBER ARMIJO: Well, these are --

MEMBER SIEBER: It doesn't appear to me that we have all the answers.

MEMBER ARMIJO: These are very robust containers, and if somebody did something, say, drop a container that's got high-burnup fuel that's aged in hydride embrittlement and things like that and broke some of the fuel elements, you know, that's a one-cask problem, and there's methods for dealing with that.

It would probably be inconvenient, but it wouldn't necessarily be a safety problem. I'd like to understand if it would be, but I don't see how it would be more than just a problem.

MEMBER SIEBER: Yes, inconvenient is an understatement.

MEMBER ARMIJO: Yes.

MEMBER SIEBER: Okay, thanks.

CHAIR RYAN: Dr. Einziger.

MR. EINZIGER: Hello. I'm Bob Einziger with, you'll notice, with one N. I'm the technical lead for this program. If there are successes in this program, which I expect, please give credit for my team. If we don't have successes or if you have problems with our program, please address them to this guy here on the name, Armijo.

MEMBER ARMIJO: The guy with the two Ns.

CHAIR RYAN: I apologize for that error, Bob.

MR. EINZIGER: That's all right. It always happens. I usually answer to anything that's a close resemblance to my name. I'm going to move right on to the third view graph, the next one, because Keith covered most of the first one.

I want to talk a little bit about what we are and what we are not doing. We're determining if the regulations are adequate in light of potential materials degradation. Materials degrade with time. Some of that degradation will be different for longer periods of time.

One advantage of determining right now

whether the regulations are adequate is that it allows the industry as they're building and designing new canisters to divide, to meet these new regulations. Maybe they can meet it just by a new coating or a new way of doing business, but the sooner they know what changes in the regulations might be, the sooner they can adapt to that, the same thing with respect to the guidance.

The guidance was established based on, that we currently have, based on a 20-year initial storage period followed by possibly a 40-year storage period after that, and then there would be a new repository. Well, we don't know when that repository is going to be. We don't know what the time period is. That guidance might change, because the degradation might change with time.

The other thing is, you know, when you buy a refrigerator, you don't buy a refrigerator to last the life of your house. You don't get a house with a roof that you figure is going to last for the whole life of the house, but you do monitor these things. You'd like to have an idea of when they're going to break so that you can price them out and get repairs or fix them before they flood your house, and that's the same thing here.

We want to know what's going on, when the components that are affecting safety might break, when the degradation of these components might start, how fast it's going to occur, and when it might be complete, because this is going to allow us to know what kind of monitoring to do, what kind of inspections to do, how to tell our inspectors that are out in the field what kind of things they should look for and at what frequency these should be done. That's where we're really going on this.

We are looking to determine whether there's issues. We are not advocating 300-year storage. The period of storage comes up, because the initial charge that we got from the Commission was to look at storage beyond 120 years.

What does that mean, look at it for 121 years, 500 years, a million years? And I arbitrarily picked 300 years. There is no technical basis for 300 years.

Now, possibly during the course of the work we do we'll find some degradation mechanism that says, "Bill, you can only store for 240 years. At that point, things are just degrading so badly that everything's got to be replaced, or you're going to have an issue," or it may be that that doesn't occur

to 1,000 years, but we've arbitrarily picked the 300-year period.

CHAIR RYAN: Bob, is there any merit to thinking about that more analytically? For example, you could look at the fission and activation product inventory and, you know, see what's basically off the table. Pick whatever number you like, ten times the half-life, seven times the half-life, and say, you know, "These are -- this is what's in play as a function of time."

MR. EINZIGER: There possibly might be, but --

CHAIR RYAN: And the reason I ask that is certain radionuclides will be in play that are of interest from long-term environmental type performance, and others will be long gone. You know, cobalt, gone. You know, that's an operational kind of issue.

So, I think if you could somehow, at least as a scoping tool, not necessarily, you know, a technical programmatic tool inside the research that you're going to do on fuels and canisters and all the rest, but at least say from an inventory perspective here's the profile of inventory in that 300-year period.

MR. EINZIGER: I think that's going to come up in that tasks that we're doing with respect to knowing what the temperatures are, because you need to know what the inventory is to determine the temperature.

CHAIR RYAN: Right.

MR. EINZIGER: It'll also come up with respect to the shielding, and it might be worth looking at. We'll take that into consideration.

CHAIR RYAN: It also -- it also comes up a little bit in looking at embrittlement that if there is cladding failures, you know, what operational challenges you may face in that regard or if there are waste-generated from handling fuels or other waste, things of that sort.

MR. EINZIGER: We'll take that into consideration.

CHAIR RYAN: Okay. Very good.

MR. EINZIGER: We are not preparing to grant 300-year licenses. Right now, as Keith mentioned, the regulations say that we can grant up to a 40-year initial license and additional 40-year extensions, provide the applicant meets certain conditions.

MEMBER ARMIJO: Is it possible with

current regulations to grant, let's say, a succession of 40-year extensions?

MR. EINZIGER: Yes.

MEMBER ARMIJO: Okay, so it would all be dependent on your database and the material degradation at --

MR. EINZIGER: Correct.

MEMBER ARMIJO: Okay.

MR. EINZIGER: Correct.

MEMBER ARMIJO: Sensible.

MR. EINZIGER: But there is no idea at this point of saying, "Okay, somebody's going to come in, and we're going to give them a 300-year license."

MEMBER ARMIJO: No.

MR. EINZIGER: The reason I'm saying this is because these questions have come up, and I want to put them to rest right at the beginning. We're not advocating any particular path forward for spent fuel handling.

We're not saying -- we're not assuming that you're going to go to reprocessing. We're not going to assume that you're going to actinide burning. We're not assuming you're going to go to a repository.

The only thing we're assuming is that you're going to have to store this thing until you

figure out what you're going to do next and that you want to be in a position that once you decide what you're going to do next, you can do it, and that will rear its ugly head in this term retrievability, because a number of people said, "Why do you have to have retrievability?"

Right now, the regulation, Part 72, talks about retrievability. There is nothing in Part 71 that says the fuel has to be retrievable. If we decided today to go over to France and buy the French reprocessing system and put it in the United States, because of the way they mix fuel, they couldn't take garbage inside the cask. They basically have to take the intact assemblies, because they mix and match and put things in their pool, et cetera, et cetera.

If we did not have retrievable situation, we couldn't get that. Maybe if there's a different reprocessing process, they don't need that, but this is an ongoing debate. Do we need to be retrievable or not retrievable?

MEMBER ARMIJO: Well, isn't retrievability really a matter of money? In some cases, if -- in the case where everything is geometrically the same as it went in and you either take it out of the container and do whatever you want with it, that's one thing,

and it costs a certain amount of money.

If the fuel is damaged in some way, it's certainly going to be more expensive, but it's still retrievable. There's nothing that's non-retrievable as far as I can tell.

MR. EINZIGER: Well, you know, you're right, Sam, and, in fact, there was a number of people that -- we call it the Hoover approach. They go in and vacuum it out of the canister and say it's retrievable.

We're talking about retrievability in essentially the same condition as it went into the -- into the canister.

MEMBER ARMIJO: That's desirable, but it's not really mandatory.

MR. EINZIGER: It's not mandatory. It is not mandatory.

MEMBER ARMIJO: Okay.

MR. EINZIGER: So we're trying to support being able to go forward but not any particular path forward. We are not trying to solve extended storage degradation issues.

We are not saying, "This degradation is going to occur, and you have to do this or that to solve that issue." That's not our job. That's the

job of the industry.

Our job is to determine whether there are events going on that we need to regulate because there is a safety issue and be prepared to review the industry's approach to solving these issues. So I want to make it clear what we're trying to do and what we're not trying to do.

We're not working in a vacuum.

CHAIR RYAN: That's the next slide, please.

MR. EINZIGER: That's the next slide. We're working with a number of other groups to minimize the work any one group has to do. The primary group we're working with is a loose confederacy of participants that was identified to tackle technical issues that's under the umbrella of EPRI.

By under the umbrella, EPRI conducts the meetings. They run the meetings. They put out the minutes of the proceedings of these meetings, and it's called the Extended Storage Cooperative Program, ESCP for short.

There are a number of participants in this, the NRC, two venues of DOE, both NE, Nuclear Engineering, and EM, Environmental Management, the

Nuclear Waste Technical Review Board. Industry has been participating in terms of the utilities, the fuel vendors, the cask vendors, and EPRI.

We meet approximately twice a year to discuss what the issues are, to see who's doing what. The idea being is that we don't want to be duplicative, and we don't want to have gaps in the -- that no one's doing.

Should there be a piece of the problem that no one is picking up or if there's a piece of the problem that's too big for any one group to pick up, then EPRI steps in and tries to form a consortium to look at those things.

This isn't limited to domestic participants. We also have international participants. Recently, there was a meeting in Berlin, where there were participants from Germany, the UK, Japan, Korea, Russia, Spain, France, Hungary, and the Atomic Energy Commission, International Atomic Energy Commission.

The International Atomic Energy Commission has taken it one step forward, and they are establishing a cooperative research program on extended storage looking to demonstrate the ability of various components of storage systems to withstand

long-term behavior and then be able to be transportable.

They are also taking the lead, along with EPRI, to coordinate with NEA in order to have one international group looking at these issues, instead of a number of international groups. The next meeting of this group is occurring this December in Charlotte.

This group has a Steering Committee consisting of members from the various participants that can make decisions on whether to move forward with various parts of the activities and a number of subcommittees consisting of people from the various participants that are looking at the particular technical issue.

There is a subcommittee looking at demonstration programs, another one looking at cask performance issues, one looking at stress corrosion cracking of the canister, at least two dealing with the fuel behavior and monitoring of the fuel in the canisters. Next one.

MEMBER ARMIJO: Five.

MR. EINZIGER: The NRC is approaching this in a three-step process. I used to say three-phase process until Keith usurped that word. The first one is what people call a gap analysis of the components.

It's a bad word. What's it a gap of?

Basically, it's to look at all the components in the dry cask storage system and say to ourselves, "Which ones are affecting safety? Which -- how can these things degrade over the time longer than the time period we're dealing with now, and how much do we know about the degradation process? Do we know a lot about it, or do we know a little bit?"

Based on that gap analysis, we're going to prioritize things and say, "This is something that's very important to safety. We don't know anything about it over the long-term.

"Maybe this is something we need to do some short-term research or modeling on to fill the information gaps to see how bad the situation is. Can we get a little bit more information to put us in a stage where we can make some regulatory decisions? Is this a problem, or isn't it a problem?"

The third part of this is a demonstration project, and this is to verify the models and information from the short-term research. It's also to determine whether there is anything unforeseen that we haven't considered. You know, there's a possibility something's going to pop up in the long-term.

As of yet, the type and duration of this demonstration has not been determined. I will talk about that a little more later in the talk. It depends upon what you want to learn from it and how much resources you have to conduct it. Let's move on to the next.

For our gap analysis, we went to the Savannah River Laboratory. A little bit of background, in 1998 and 2002, EPRI did a couple of gap analyses to look at 100-year storage and pretty well came to the conclusion at that time that there was nothing impeding 100-year storage.

That was primarily the basis for a lot of the Waste Confidence Decision, but that had a lot of -- I won't call them defects, a lot of shortcomings, and I know because I did those analyses for EPRI, or at least participated strongly in them.

It didn't cover high-burnup fuel. It didn't look at containment systems. It didn't look over 100 years. It didn't consider MOX. It didn't consider climate changes. It didn't consider anything but zirc claddings. It didn't consider the new claddings.

It didn't consider the fact that we now have seven sites -- I think it's seven. Maybe it's

nine -- where there's fuel at the site, in storage, and that's all that's there. There is no retrieval pool. There is no reactor. There is no support facilities.

So we asked Savannah River to do this gap analysis. We had them assume a 300-year time period. We told them retrievability may or may not be required, as we just discussed earlier. We wanted them to consider high-burnup fuel, coastal climates, MOX, and essentially all those things that I told you just previously that hadn't been considered before.

MEMBER ARMIJO: Bob, why in the world climate change? I know it's a buzz word, but for this application why do we drag stuff like that into it? What we're talking about is relatively short-term in terms of climate.

MR. EINZIGER: Well, that's basically what the results of this thing came up to be.

MEMBER ARMIJO: Okay.

MR. EINZIGER: That over the -- over the period of 300 years, we're not expecting the coastal waters to rise so high that we're going to flood the coastal ISFSIs.

MEMBER ARMIJO: Okay, thanks.

MR. EINZIGER: This report is in the final

preparation stages. In fact, I think it's undergoing final editing right now and should be on the street as a NUREG/CR before the end of November. The intent is to be able to distribute that at the next ESCP meeting.

MEMBER ARMIJO: Well, I'd certainly like to see that report when it's available, if --

MR. RUBENSTONE: We will definitely get that to you. Right now, the schedule, as Bob said, it's in final editing, and I would -- I would say even before the end of October is what we're looking at.

MR. EINZIGER: In addition, we put in place a user need with Research. Next view graph, please. The major task initially with the user need was what Keith talked about as the gap analysis reconciliation. The gap analysis -- there was a gap analysis done by DOE. There was one done by NWTRB.

There was partial gap analysis done by various international groups, and the user need was essentially to take these gap analyses and look at them, see where they agreed, see where they disagreed, see if they were using consistent databases, et cetera. Darrell will talk more about that activity.

The user need included an activity which is ongoing now to do two things. One was to look --

we have a number of user needs with Research, and other offices such as NRR have user needs with Research.

The idea was to look at all these user needs to see whether there was anything in these user needs that would be useful to give information for extended storage, and could these user needs by slight modification be changed to give data for extended storage, in other words, take what's already being done that's modifiable but extend its usefulness?

They were also going to look at other international programs, not only those that were done by the -- that the NRC is a participant in, but also ones that we're not participants in, to see where work is being done that we can either buy data, participate with them, or possibly influence them to modify them slightly to give data that would be useful to us.

For instance, recently we found out that there is an irradiated grid over in Studsvik that was placed there on an international program. It would be useful to us to see how that irradiated grid stands up in terms of vibration and in terms of crush testing in order to see how it would behave in a transportation accident. We're also looking at risk evaluation and source term evaluation. Darrell will talk more about

that.

Stress corrosion cracking of the canister welds under coastal and industrial environments. A study was done at the Southwest Research Institute in San Antonio that indicated that stressed welds in austenitic stainless steel can undergo stress corrosion cracking in a rather short period of time if the conditions are right in terms of humidity, salt deposits, temperature, and a number of other factors to make it occur.

CHAIR RYAN: What is relatively short period of time?

MR. EINZIGER: Periods of time that they did for study had stress corrosion cracking occurring in less than a year. Now, I want to emphasize --

MEMBER ARMIJO: I would say, Bob, that if that occurred that there is a design or a materials --

MR. EINZIGER: Wait, wait, Sam. Wait, Sam, before you jump in.

MEMBER ARMIJO: Okay.

MR. EINZIGER: I said we could make it occur. I didn't say that the conditions existed in storage facilities that would occur.

CHAIR RYAN: Let me rephrase my question. With conditions that do exist in storage facilities,

what time are we talking about?

MR. EINZIGER: Okay, that is a loaded question.

CHAIR RYAN: Yes, it is.

MR. EINZIGER: And I'm going to get into that.

CHAIR RYAN: All right.

MR. EINZIGER: The first thing I'm going to tell you is we don't know what the conditions are in the storage facility, because the place that you're interested in is that gap between the canister and the concrete overpack. What we know is -- what we know is conditions outside the overpack, so we're not sure what that is.

Secondly, we're not sure about what the condition of the stress is at that weld that are there. These are not stress-relief welds. Thirdly, it's going to be temperature-dependent, and we're not sure yet whether the temperature has dropped to a sufficient condition where this will even initiate.

Fourthly, we're not exactly sure what the salt concentration needs to be on the surface to make this occur. We forced the issue. Now, as Sam will tell you, we could fill this room with reports dealing with stress corrosion cracking in marine environments

of austenitic stainless steel.

As Geoff Hornseth would point out, 99.9 of those reports are irrelevant to the situation that we're considering, because almost all of them were done in aqueous environments. We're talking in a moist, humid environment, so there are issues.

MEMBER ARMIJO: But, Bob, look. These -- if you're going to design a stainless steel, welded stainless steel for a coastal environment, there's many, many design and fabrication techniques that can be used to prevent the presence of tensile stresses at the surface, shot peening, other methods that are commonly used.

So, this is, to me, make work. There is no reason why it isn't amenable to just, you know, practical design, and, actually, if you think you're in a bad environment, just simply monitoring it, washing it down if you need to do it.

It just seems like we're -- I see in here a lot of the things that I've seen in the work that went into Yucca Mountain, hypothetical problems that are just turned into monstrous R&D projects.

MR. EINZIGER: Well, let me -- let me reply to some of what you said. I agree with you. There's a number of mitigation methods that could be

used to reduce the stress. Those aren't used today.

There are a number of ways of avoiding the salt buildup, washing being one of them, but they don't know how fast the salt redeposits. The estimates, depending on who you believe, is that those salt -- the critical salt concentration could deposit anywhere from 30 years to take to build it up to 30 hours that you build it up. We don't know. We don't know what the temperature drop is there.

We do not want to go out to the industry and tell the industry, "You have to stress relieve it. You have to wash it down. You have to mitigate things unless we know that there is really an issue there."

Our job is to find out is there an issue we have to regulate, and we don't know. We can force it and say there's an issue and go do things, but we don't know that that issue is there. Our research and what we're trying to drive the industry to do is get a feeling for what the temperature is in there.

Get a probe in there to inspect. Do you see any rust occurring? Because if there's no rust occurring, then we know we're not getting stress corrosion cracking started. Is there -- are there -- monitor the conditions. Get swipes there to see whether the salt is there.

In order to see whether this is a real effect or whether it's a known nothing, we can make it happen, but we don't -- we're not saying it does happen. We don't want to regulate it if it's not happening. It may be a nothing, but we have to determine it's a nothing.

MEMBER SIEBER: Let me ask a question. I presume there's a lot of spent fuel storage systems out there already, and the work you're doing to try to extend the life of these systems by periodic relicensing, I presume they will apply to storage systems that exist today where stress relief is not considered or alloy control was not considered, coastal situations. The NASA studies tell us that coastal situations can go for many miles inland in terms of atmospheric carry.

Would -- does all of this help to extend the life of existing storage facilities? Because I think for the next 50 years that's going to represent the bulk of the spent fuel storage is the systems we have today.

MR. EINZIGER: Keith recently did some map overlays, and depending upon what the level of salt that you want to consider and the general atmosphere, coastal environment could be defined all the way to

the base of the Appalachian mountains. We don't know that yet.

MEMBER SIEBER: Well, it changes, too.

MR. EINZIGER: Yes. The amount of salt that's deposited is dependent upon the wind velocity and things like that. We don't -- that's going to be different.

In terms of extending the license, right now there is an application in by Calvert Cliffs to extend their license. They are going to have to -- they are being required to examine a canister, but where we stated --

I mean, if you look at the Standard Review Plan for license extension, it talks about putting an aging management in plan. Up until very recently, it hadn't been decided yet. Do we monitor the canister that's the hottest, or do we monitor the canister that's the coolest?

Well, now it's coming it's you do the coolest, which is a low-burnup fuel effect. So the answer, probably, to your question is yes, we are concerned enough about this that we are requiring that they do an examination of an existing facility now.

MEMBER SIEBER: But if you focus your attention on existing facilities and the storage

system, questions that arise about the integrity of the fuel inside the storage system remain unanswered, but if it's temporary, you need to maintain that internal integrity in order to be able to put it into some other facility.

MR. EINZIGER: There are a number of considerations that we are looking at. One is if there is stress corrosion cracking occurring, when is it starting to occur?

Two, if it's starting to occur, how fast do the cracks propagate? Are we getting to a point that we're going to propagate through the full welds and start compromising the integrity of the gas composition inside the canister and this affect the behavior of the fuel?

Are there going to be sufficient cracks in the welds so that when you pull the canister out that you pull the top of the canister and leave the rest of it in there, or does one -- if you get a crack, does it relieve the stress so that you don't propagate other cracks?

If you're going to move it into a overpack for transportation, now, in an overpack for transportation the canister is not required for containment. That's the process of the overpack, but

if you're going to do something like a moderator exclusion where you need a --

If you were dealing with high-burnup fuel that you were going to need a secondary barrier, and if you chose to use that canister, is it still in a state that it would survive the accident? These are all questions that are being currently on the table being evaluated.

MEMBER SIEBER: Well, most of these are not easy problems to solve.

MR. EINZIGER: I agree with you there.

MEMBER SIEBER: Okay. Thank you.

MR. EINZIGER: And I agree with Sam.

MEMBER ARMIJO: I'm sorry to say, Jack, I think these are very straightforward things, but obviously that's just my opinion, but if you're going to --

It would seem that it's pretty rational that if you're going to design something for storage, long-term storage in a coastal environment out of stainless steels, you would apply practical fabrication techniques that would minimize the risk of something like stress corrosion cracking.

That would go all from the beginning with the weld design to make sure that if there are weld

residual stresses they don't penetrate all the way through the structure but also shot peening to put compressive stresses, knowing the temperatures to know that you can't have an electrolyte and have a stress corrosion cracking phenomenon gong. All of these things are just straightforward design work.

Now, if you haven't done it and it's out there and you've got to evaluate it, that's a different story, but it seems to me even that is amenable to mitigation by cleaning, hosing down. So, yes, I guess --

MR. EINZIGER: Well, I'm not --

MEMBER ARMIJO: This could turn a molehill into a mountain.

MR. EINZIGER: I'm not disagreeing with you, Sam, except I look at it a little bit differently. I'm trying to turn the mountain into the molehill, the mountain being requiring them without justification at this point to go ahead and do this preventative measures or do these extra steps during the maintenance. All that we require at this time is that they meet the regulation.

It's a different point of view, Sam, and I can't go and tell -- if I went out and I said I'm not going to license a dry storage facility on the

coast using austenitic canisters unless they can show me that they've taken these various measures, the applicants are going to come in, and they're going to say, "These are going to cost me extra amount of money or extra amount of time, and you have to tell me that there's something that -- a requirement that I'm violating by not doing these things," and I don't know that we have the information unless we can show that there is an effect going on to do that.

Now, I'm sure there's a lot we could discuss on this, and I welcome the discussions that we have, but I think that the regulatory direction on this is going to take more than we can do in the next -- I think I've got 15 minutes left.

MEMBER ARMIJO: Okay. You know what? I don't see this as anything as a regulatory requirement. I just think it's good engineering practice, and if I was buying a system like that commercially, I would insist on it, and that maybe goes beyond. Maybe it's overkill, but I certainly would be in better shape if problems arose later downstream and something else had to be done that was more expensive.

MR. EINZIGER: Well, I know John Kessler is on the line, and I know that a representative of

NEI is here, and so your opinion that they should do these things whether they say they need them or not, they can pass those on --

MEMBER ARMIJO: For what it's worth.

MR. EINZIGER: They can pass them on to their utilities and their cask vendors.

I want to continue on. Another one I talked about briefly is we're looking into the concrete degradation issue. One of the things that we're doing a lot of is looking at thermal modeling of the upper and lower fuel and canister temperature distributions, and I want to talk about this briefly, because this governs a lot of things.

Right now, the way the modeling is done for the temperature distributions is there's a lot of assumptions made that tend to be on the conservative side so that the temperature of the fuel that they -- and canister that they're calculating is higher than the actual temperature that they have in there.

What we're finding is that with respect to the canister and when stress corrosion cracking might occur, the critical issue isn't the higher temperature. It's the lower temperature.

It's when you get down into the range when you start condensing water on the canister, and that

means knowing the lower temperature. So if you're over-predicting the temperature, you're at that point already when you think you're not at that point.

With respect to the fuel, the issue of hydride reorientation occurs at a higher temperature, so we're asking them to use their current models to find where in the cask you're going to expect hydride orientation to occur, because, as you are well aware, there's both an axial and a radial gradient, temperature gradient in that cask.

But, more important, what we're finding out is the radiohydrides don't play a role until you get to the lower temperatures that you would expect during transportation. Once you get radiohydrides and you start looking at the ductility of the material, depending upon what stress there was when the radio hydrides formed, at what temperature they formed, how many they formed, and whether the material is ductile or brittle is going to be dependent upon the temperature at the time an accident occurs.

The material goes through a ductile brittle transition. That temperature is very dependent on the material. It's dependent on all these other parameters.

So, really, once you've established the

ductile brittle transition and you want to transport above that point, but you need to know what that point is, and if your temperature models are giving you a high bound, you could be at that point and think you're not at that point.

So we're having the modeling being done to try to get a better idea of what the temperature distributions are, both on the high and the low side. That will mean taking some of the assumptions that are made with respect to contact heat transfers and all and be reevaluated, and they're doing that.

MEMBER ARMIJO: So, are you looking to go more towards best estimate modeling with some uncertainties, as opposed to worst case in every situation?

MR. EINZIGER: Yes.

MEMBER ARMIJO: Okay.

MR. EINZIGER: Yes. We also have work being done at the Center for Nuclear Waste Analysis down in San Antonio. One of the effects that we're looking at is the consequences of incomplete drying. You know, once the canister is loaded, the canister is drained, and it's either vacuum dried or undergoes forced helium dehydration to remove the moisture.

There's been instances where that process

has not been complete, and there's been water in the canister. Of course, if there's water in the canister and you have radiolysis and corrosion taking place, there's a number of events that occur, depending upon whether you have breached fuel in the canister or not.

You've got oxidation of the cladding, oxidation of the fuel. You've got hydrogen buildup. You could have hydrogen going into the steel, a number of things.

So what we've asked them to do is assume that they've had incomplete drying, and what would be the consequences of it? Now, if I'm correct, and people have to correct me, I think the report on that is due sometimes this fall for us to take a look at, first draft.

Another task we're asking them to do is evaluate the potential types of demonstrations. Now, the demonstrations could run all the way from the Cadillac of demonstrations where you take it and you start from scratch. You get a --

You use a number of different casks. You use a number of different fuels. The fuels are in different conditions. You've completely characterized the fuel. You've completely characterized the cask.

You have all sorts of monitoring taking

place, and you have the full-blown thing, all the way down to the demonstration possibly being is that we go to a few casks on a few sites. We put a few probes in, take a visual look, and say, "Hey, nothing's happening." You could go through all sorts of demonstration types of steps.

Another type of demonstration was, "Well, let's separate the two. Let's look at the existing casks out there, monitor those casks in some way, and look at the degradation over time. Then let's look at the fuel separately, set that up in a hot cell with a number of assemblies where we characterize the fuel monitor, and look at it, and there is a separate one.

We have all sorts of demonstration projects, and what the Center is doing is they're looking at each one of these types of demonstrations and saying, "Okay, if I do this type of demonstration, this is the kind of information I get out. If I do another type of demonstration, well, there are some cons to it, and I get a lesser amount of information," so that we have a tool that knows that whatever type of demonstration we pick that this is what we're going to get from it.

Now, of course, the one that we actually picked is going to be dependent on a lot of things.

It's going to be dependent upon where there's a facility to do it. It's going to depend who can come up with enough shekels to do it. It's going to depend on the timing. It's going to depend on the amount of regulation you're going to have to do.

For instance, if there was a demonstration you wanted to do that says, "Okay, we've got -- we want to put a cask out at an existing utility that's got an ISFSI, but we want to put penetrations in that to be able to monitor," well, current regulations don't allow penetrations. We'd have to get an exemption. So there's all these things to be considered.

Now, DOE is doing a project where they're looking at all the logistics, and hopefully these two studies will marry together. This study says -- the DOE study says, "This is what we can do." The NRC study will say, "This is the information we get from what we can do, and we'll come to some place where there's a demonstration everybody's happy with."

That report, as far as I know, is supposed to be sitting on my desk within the next week for me to take a look at, and so once again our idea is that this meeting of the state committee in December that we will be rolling out the results of that report.

In fact, at that meeting, John, if you're listening, we're going to want to have time to talk about the results of our consolidated gap, our demonstration work, and our -- what are -- what was the third one? There's a third.

MR. COMPTON: Gap penetration work.

MR. EINZIGER: There's a third item. Anyway, I'll get back to you, John.

CHAIR RYAN: Bob, we're getting close to our break.

MR. EINZIGER: Now, interprioritization, next view graph. What we're doing is we're looking at all the components in the system and how they rate to regulatory requirements. We're then going to estimate the state of knowledge of the degradation of those components, when the degradation initiates, the rate, and the completion. Do we know a lot about it when it -- do we know nothing about it?

We're also going to look at the -- estimate the state of monitoring and the inspection capability. Based on -- then we're going to go in, and we're going to estimate the relative importance to safety. Okay, is this -- if this degrades, is that important, really important to safety, or is it a minor thing to safety?

Then we're going to start putting these --

MEMBER BLEY: Bob?

MR. EINZIGER: Yes?

MEMBER BLEY: Dennis Bley. Can I interrupt you? Can you tell us anything about how you're planning to do that?

MR. EINZIGER: Expert opinion. What we do is we're going to be taking the recommendations that Research is giving us from their evaluations, the various gap analyses, and the various database to determine what our state of knowledge is.

We're going -- with respect to whether some degradation mechanism is important to the safety, we're going to be taking people who -- senior reviewers who have been dealing with current licensing and bringing them together to evaluate those, whether if the condition has changed, how it would affect their evaluation of the safety.

We're going to then take those two together --

MEMBER BLEY: Is that going to include, when you say the safety, looking at what the potential consequences could be of some set of accidents, given that amount of degradation?

CHAIR RYAN: Who -- could you identify

yourself for the --

MEMBER BLEY: Yes, it's Dennis, Dennis Bley.

CHAIR RYAN: Thank you.

MR. EINZIGER: Right now, it will only include it to the extent that the reviewers consider it when they do reviews of systems.

MEMBER BLEY: Okay. I want to toss something in here, Mike, because --

CHAIR RYAN: Yes, please.

MEMBER BLEY: -- I entered this meeting kind of thinking the way Sam has been expressing and wondering if this is a lot to do about not too much, but as I've heard especially Bob talk, as a --

You know, NRC is not the designer and they could get anything sent to them, so the times and issues Bob has pointed out that they're going to be looking at seems to me what a regulator needs to do to figure out where the problems might lie beyond what the designer might submit to them and claim are the problem.

The only caveat to that, I would say, is, however, if, in fact, the worst thing that could happen, given the degradation, and that would include some accident that leads to some relief, has very low

public consequences. Maybe we don't need to know all of this as thoroughly as it sounds as if we could.

So, I'm sorry, Bob. Go ahead.

MR. EINZIGER: No, well, we completely agree with you, and that's the -- that's the role of doing this review is they're going to look at four situations. They're going to look at normal storage, accident storage, normal transportation, accident transportation, and in each case they're going to say, "Is this degradation of this component going to affect the safety?" They're going to say, "No, it doesn't," or, "Yes, it has a high."

Then what we're going to do is we''re going to say, "Okay, here are the ones that have a major effect on safety." We're going to look. What do we know about them? If we --

MEMBER BLEY: As long as the safety includes looking at the possible health effects to people, I think I really like what you're doing. If it's at a much lower level that the safety would be if we have some lack of integrity within a canister or something, then I think we might be over-playing our game here.

MR. EINZIGER: I go back to what Keith had pointed out. We have a number of considerations. We

have to stay subcritical. We have to prevent releases from the system, and we have to maintain a certain dose limit.

If, for instance, we had a degradation of a weld that we are going -- is going to occur with releases, then we're going to say that there's an implication. We are not going to take it further to say whether that release is going to give a dose to the public, and we don't do that under normal regulation.

Let me just finish up, because I'm getting the -- the hook is getting closer to me, and just say that those items we have a high degree of uncertainty on the safety, and we don't know very much about whether the mechanism is going to occur or not. Those are going to get a high priority.

Those things that are low in safety implications, and we know a lot are going to very low priority, everything else is going to be in the middle. Thank you.

CHAIR RYAN: Well done. With that, we are scheduled for a 15-minute break, so take that 15-minute break now and start back up at 30:35. Thank you.

(Whereupon, the foregoing matter went off

the record at 10:17 a.m. and resumed at 10:35 a.m.)

CHAIR RYAN: All right. The Subcommittee will now come back in session, please. I think we have Dr. Bley returning to the phone.

MEMBER BLEY: I'm here, Mike.

CHAIR RYAN: Dennis, you can hear us okay. Are there any other folks on the bridge line still connected?

MEMBER BLEY: Yes, John Kessler is still here.

CHAIR RYAN: Okay, and they're on --

MR. MINTZ: And the Center for Nuclear Waste Regulatory Analyses is still here.

CHAIR RYAN: Okay, great. It sounds like it's a good connection for everybody, so we'll proceed, and I turn the meeting back to you, Bob. Are you --

MR. EINZIGER: I'm turning it to Darrell.

CHAIR RYAN: Oh, to Darrell. Okay. Well, Darrell, next up. Making sure you were done.

MR. DUNN: Thank you.

CHAIR RYAN: Darrell, take over.

MR. DUNN: Thank you very much. My name is Darrell Dunn. I'm in the Office of Nuclear Regulatory Research in the Division of Engineering,

Corrosion and Metallurgy Branch, and I'm going to be talking about the research activities as part of the Extended Storage and Transportation Program.

Before I get started, I want to point out that we have a number of RES staff that are involved in this effort. I won't list all their names, but we have representatives and staff from the Structural, Geotechnical, and Seismic Engineering Branch in the Division of Engineering, staff from the Division of Systems Analysis, including the Fuel and Source Term Code Development Branch, staff from Division of Risk Analysis, including Probabilistic Risk Assessment Branch, and the Environmental Transport Branch.

Okay, next slide. The Office of Research in March 2001 received a user need from NMSS on the Extended Storage and Transportation Program. That user need was responded to on June 15, 2011, and so this, as we've discussed previously in this meeting, is a relatively new effort that's taking place here.

I'll describe what's going on in this program in some subsequent slides, but I do have some key dates here for some of the work and the deliverables. A July 2011 date was a Summary of Existing Technical Studies and Risk Insights.

As Keith mentioned, in September 2011 we

are going to provide our input to the Gap Synthesis Report. Then in October of 2011 we're going to provide a summary of our international efforts to look at international programs where we can leverage information for the Extended Storage and Transportation Program.

Then we have a couple of deliverables in April 2012, and I'll talk about those a little more when we get to them, but they're associated with state-of-the-art tools and methods for consequence analysis and some of the draft plans for stress corrosion cracking, concrete degradation, and the minimum fuel temperature distributions that we've discussed previously.

MEMBER SIEBER: Are the international efforts -- do they run pretty much parallel to the U.S. efforts, which is extending interim storage and examining the same kinds of issues that you're examining, or is it more varied than that? If so, how much of it is usable for your purposes?

MR. DUNN: Right. They're not all parallel, and there are some unique efforts that are taking place. For example, some of the work being done in Germany at BAM is looking at degradation of seals, which are used a lot in their bolted casks, so

creep of the seals is something that's being actively looked at there.

Some of the other programs, the international efforts in Japan, I don't know if we can really use them as a good example at this point in time, but obviously they weren't looking, really, to have extended storage and transportation or extended storage so much, because they were looking at reprocessing, but their efforts in looking at the issue of marine atmosphere stress corrosion cracking were quite relevant.

MEMBER SIEBER: Yes, because most of Japan has a marine atmosphere.

MR. DUNN: Right, and all their plants are basically on the coast.

MEMBER SIEBER: And it's fortunate at Fukushima that they kept their spent fuel pools at lower levels of stored fuel.

MR. DUNN: Right. Okay, so the third slide here is the task summary, and the subsequent slides I have in this presentation will have more detailed information about what the work is that's going on in these tasks and what the future plans are and even some of the deliverables.

But just for the purpose of giving a high-

level picture of what this user need encompasses, it's divided up into seven tasks. The first one is to provide to the Extended Storage and Transportation Gap Assessment, provide input to that by identifying material aging and degradation mechanisms that are important to the performance of structures, systems, and components during spent fuel storage for extended periods.

The second task is to participate in the EPRI Extended Storage and Collaboration Program that Dr. Einziger described earlier and to obtain data that's useful for this program. Dr. Einziger also talked about the effort to integrate some of the current user needs activities into this Extended Storage and Transportation Program. Those may be user needs that are active from NMSS and also NRR.

Task 4 is the development of state-of-the-art consequence data and assessment tools for extended dry storage. Task 5 is the support for the risk-informed performance-based gap assessment and risk-informed performance-based enhancement for extended storage.

We talked a little bit about the international efforts that are in Task 6 and the idea to leverage information that's going on in those

programs that may be related or useful to extended storage and transportation. Then, finally, Task 7 is looking at project planning for research into emergent technical issues.

Again, the three of them that have been identified in this user need have been stress corrosion cracking in marine and maybe industrial environments, concrete degradation, which is something that has been observed in operating plants and in spent fuel storage systems at the Idaho facility for the TMI2 fuel, and, finally, the temperature distributions for the cask.

So, Slide 4 here, Task 1, input to the EST gap assessment. We are going to provide our input to NMSS at the end of this month. We are looking at several different reports and additional information.

Our efforts have been focused on the first three reports that I've listed here. Reports from the Nuclear Waste Technical Review Board was actually published in December 2010. There is a gap assessment from the Department of Energy that was recently revised in, I think, June of 2011.

NMSS had contracted with Savannah River National Laboratory, and they have done a gap assessment. That was recently revised in August 2011,

and most recently the Electric Power Research Institute has published a report in August of 2011 on the Extended Storage and Collaboration Program, and that also has a synopsis of gaps for the extended storage of spent nuclear fuel.

So, the gap span, again, most of the structure systems and components for dry cast storage systems, fuels, cladding, hardware, canisters, closure seals, welds, bolts, concrete pads, concrete vaults, overpacks, neutron shielding materials, poisons, and monitoring systems. And, again, we're getting input from multiple staff from the Office of Research, including Division of Engineering, Division of Systems Analysis, and Division of Risk Analysis.

There have been some additional degradation processes identified that were not covered in the first three of those reports. We haven't really gone through the EPRI report in great detail, since that's a more recent publication that's only been available to us for about ten days.

What we're doing here is coming up with a path to reconciliation, stating what the knowledge is of this particular component or condition in terms of initiation, how fast that degradation mechanism will occur, and what the effect of that degradation

mechanism may be in terms of is it significant to degrade the structure system and component, and then identify what information is needed to bridge that knowledge gap.

MEMBER SIEBER: Can you give us a few examples of the additional degradation processes that you did identify?

MR. DUNN: The one that we identified that I can think of right off the top of my head that wasn't in the first three reports was microbially influenced corrosion, but that was addressed in the EPRI ESCP report.

MEMBER SIEBER: You wouldn't think that the microbes would survive.

MR. DUNN: Certainly, you would think that, at least initially, the temperatures and radiation would sort of produce a sterilizing environment, but for long periods of time for casks where you may have a deposition of salts, organics, as has been pointed out in an NWTRB report, and then having cooler temperatures where condensation of water could occur --

MEMBER SIEBER: As the cask cools down.

MR. DUNN: -- as the cask cools down, this might be a possibility. We're not making the

assessment that this will occur. We're just pointing out at this point that this is a gap that we know affects austenited stainless steels, particularly at welded joints, and it was not addressed in any of the three gap assessment reports.

MEMBER SIEBER: Could you give me one or two additional examples of unidentified --

MR. DUNN: That's the only one that comes to mind at the moment.

MEMBER SIEBER: Okay, thanks.

MR. DUNN: Okay, so --

CHAIR RYAN: Darrell, I think that might be an interesting thought for our next Subcommittee meeting is to have a pretty good list of you think this is the unidentified issues that we could hear a little bit more about. That might be something we might want to add for our next agenda.

MEMBER ARMIJO: Yes, particularly microbial-induced corrosion. That clearly must have come out of the Yucca Mountain kind of thinking. From a technical standpoint, you have to go on an incredible stretch to turn that into a significant threat to the integrity of a container.

MR. DUNN: Stretch in terms of?

MEMBER ARMIJO: As far as the mechanism,

as far as the kinetics of the process, as far as the possibility of the process in these applications. It just -- what I see is what's happening here is Yucca Mountain million-year storage thinking going into temporary storage, and I just am very alarmed that this is going to turn into something that is far beyond what's necessary for safety.

MR. EINZIGER: Sam, that's my job. I don't think Yucca Mountain, because I'm at least 20 years from when I worked on that one. Darrell's job is to look at -- identify mechanisms, tell me what he knows about it, and then it's going to be my job when I take it through the prioritization system to say, "Hey, this is a 'No, never mind,'" or it does mean something. So there's a number of filters coming down the road that if it doesn't cut water, it will be eliminated.

MEMBER ARMIJO: Well, hopefully the ACRS can contribute to that. At least I know where I'm going to be.

CHAIR RYAN: So, to that end, Sam, I think, and to the staff, as well, I think the issue is to bring that list in a fairly complete form on our next meeting, where we could have something to at least study and learn from as we learn it from you.

MR. COMPTON: And just to reiterate, I mean, that is the gap assessment that we'll be putting out, and the point being is that it will be kind of organized. All of these things will be identified, and we'll be talking about, "Here's what other people have said," and then we synthesize this, and, "Here's what we -- here's what we think about it." I think that would be a lot --

CHAIR RYAN: Well, what we think about it is one thing, but I think the important part is it gets whittled down to a reasonable set of scenarios and a reasonable set or an appropriate set of degradation mechanisms that are real and will have an impact, particularly with regard to the end point of safety that Sam mentioned, and that's where the action ought to be, so that's the purpose of this whole process is to focus on that.

MR. COMPTON: And that will be out well before the meeting, so the meeting won't be the first time you see it. It'll be available to you even beforehand so that you'll be able --

CHAIR RYAN: So we'll have a crack at that.

MEMBER SIEBER: But I think the staff's approach is the right one. You parse it as small as

possible, degradation mechanisms, and then you decide which ones apply to the situation that we're working on, which is the step they haven't addressed yet.

CHAIR RYAN: I'm reminded of a phrase I learned from one of my mentors at ORNL who said, "You've got to remember that research is kind of like an East Tennessee hillbilly band. There's a lot more tuning up than there is playing," so we'd better get to the playing stage and not just the tuning up part.

MR. DUNN: Let me point out one thing, though. The MIC problem didn't occur because of knowledge of Yucca Mountain. The MIC problem that we initially raised, and, again, we actually identified this before the EPRI report was available to us, is because this has been observed in stainless steels. It's agreed that it's typically not something that happens in stainless steel exposed to not a water environment.

A typical example is, you know, you've got a piping system that somebody does a hydro test of. They drain it. They don't properly drain it, and then three months later they've got pitting going through wall of --

MEMBER ARMIJO: That's buried underground piping kind of stuff, you know.

MR. DUNN: That's typically the case.

MEMBER ARMIJO: But there's --

MEMBER SIEBER: Condenser tubes.

MEMBER ARMIJO: And in the case of Yucca Mountain, the logic went something like this. "Hey, you know, this is a dry storage in the mountain," all that sort of stuff, "so why should you have MIC?"

We said, "Well, we don't know. Maybe something will drip on it," and he said, "What's going to drip on it?" and, "Oh, well, it's going to be -- we're going to be here a long time, so maybe there will be some water, and eventually there will be some microbe."

When you're talking 10,000 years and you do out to 100,000 years, a million years, those guys always win the argument, because nobody knows what's going to happen out there, but we're talking about something that is, you know, some people's lifetime, not mine, but they're going to --

You know, this is amenable to analysis, and you don't have to go into these very slow processes. The kinetics are slow, unless you have an idea environment for microbial corrosion, and you are far from it. So I guess that's Bob's job is to truncate that as soon as possible before we spend a

lot of money and effort on a non-event.

MR. EINZIGER: Well, there won't be any money spent on it until it makes it through the system of is it going to occur, and does it have a safety evaluation, and see where it is on the priority list. It's better that we identify it and eliminate it now than have somebody during a licensing hearing come up and bring it up.

CHAIR RYAN: One thing that would help, I think, a lot in this discussion -- it sure would help me. I mentioned it to Keith when we were coming back from break -- for all the different types of fuel and burnups of fuel, it's a very clear way to understand exactly what's in it from a fuel that's left, from an ingrowth of plutonium, from fission products and decay, all the life of that fuel in storage.

It would help a lot to have a very clear picture of it. You know, this fuel with these characteristics of its operational life, for the 300 years after you put it in a dry storage cask, here's what's left, and the remaining inventory I think will be pretty dramatically small when you get out 100-plus years, and there will be a very small number of radionuclides that will still be in play.

MEMBER ARMIJO: Yes, and I think, you know

--

CHAIR RYAN: Just having that clear picture as a common currency of how to have these discussions would be really helpful.

MEMBER ARMIJO: Yes, going back to Dennis's comment on when we talk about risk whether we really use the risk in the formal sense as a dose to the public, and if you're going to have a risk-informed analysis, I think you have to go that far.

For the times involved, I think all the things that Mike has mentioned, the risk is getting less with time. Maybe structurally there are some issues, but that's also amenable to analysis, but I think -- I think we're getting focused on what-ifs on certain mechanisms, can they cause something to crack or fail, and all of that.

You've got to integrate this whole thing into a proper risk assessment, I think. Otherwise, we're going to lose focus on what we're trying to achieve here, and that is dose to the public.

MR. EINZIGER: Well, Sam, that may end up coming in in a regulatory revision for extended storage. You remember in regulatory space right now there are certain requirements on criticality, on release, and on shielding.

Now, the issue with release is based on a sum A2 value release over time, and if -- and that translates into a leak rate on the canister. Obviously, if the A2 value goes to zero in the extreme, which it won't, the leak can be -- you don't have to have a canister.

It may well be that if one looks at the A2 values in the interim, you're going to find out that while you could have a leak rate in year one limited to ten to the minus-seven that if you were out in year 300, the leak rate could be ten to the minus-four, and that has not been done yet.

CHAIR RYAN: Okay. Darrell?

MR. DUNN: All right.

CHAIR RYAN: Let's press on.

MR. DUNN: I'd like to move on to Slide 5. It's about Task 2 for our participation in the EPRI Extended Storage Collaboration Program. This actually started in May 2011, at least, our participation in this, at the EPRI meeting at the NEI conference.

Dr. Einziger talked about the formation of the working groups there, so I won't go through them, but there were multiple working groups on fuels, canisters, concrete demonstration program. Dr. Einziger also talked about the June 2011 meeting in

Berlin, so I won't talk about that.

We did actually have a meeting with the staff that are involved in one of the working groups on canister cask stress corrosion cracking. That particular effort is being led by staff from Transnuclear.

Transnuclear has canisters at its ISFSIs that are located in coastal sites, Turkey Point, St. Lucie, SONGS, Calvert Cliffs, Oyster Creek, Millstone, and Sea brook. They have approached these licensees and asked about possibly sampling what's actually being deposited on the casks, and they've gotten some favorable responses back from Oyster Creek, Calvert Cliffs, and San Onofre.

So in our discussion with them in August, they've talked about, you know, what it would take and what they would need to do to actually sample what's being deposited on some of these container surfaces, some of which have, of course, been at the ISFSIs for a long period of time, and how that material would be analyzed.

But the question they had was, "What does that mean?" So, you know, the question of, "What type of environment do I need to be concerned about how much salt, how much composition?" that's something

that they don't have a good handle on.

MEMBER ARMIJO: Well, whether they have an electrolyte there. If there's -- if there is no liquid phase, you don't have a stress corrosion cracking problem.

MR. DUNN: Right, and some of our other discussions have been once you know what's deposited on the surface and once you know what you have for a temperature and relative humidity, you can determine whether or not you're going to get deliquescence and have the electrolyte being present that might cause an issue.

Subsequent to that discussion, we have some work that we're now looking at doing in terms of some additional work for stress corrosion cracking where the minimum concentration of a chloride salt deposit on a cask that might cause an issue is going to be examined looking at temperatures that are higher than what has been looked at before where there was issues identified.

But this effort, you know, will hopefully yield us information which we will be -- that will be useful to determine if there is a need to do a mitigation method and how effective that mitigation method might be.

So, you know, some of the mitigations that have been talked about have been washing of casks, for example. Whether or not there's other mitigation methods that come up, coatings, filters that prevent these types of salts from being deposited on the cask, having the knowledge of what type of concentration or environment that we need to be concerned about helps us to evaluate what the proposed mitigation method might be.

MEMBER ARMIJO: We've talked a lot about stainless steel. Are all of the casks stainless steel? Are any carbon steels used?

MR. DUNN: There are coated carbon steel casks.

MEMBER ARMIJO: Okay, and are they used in the marine environment or not?

MR. DUNN: Surry.

MR. EINZIGER: Yes, but they're coated.

MEMBER ARMIJO: So they don't have a chloride stress corrosion cracking problem.

MR. EINZIGER: Not as long as the coating stays in place.

MEMBER ARMIJO: Whether it -- even without the coating, carbon steel won't crack with chlorides.

MR. EINZIGER: Coating --

MR. DUNN: Some of them do use stainless steel bolts.

MEMBER ARMIJO: Well, that's fine. You'd have to look at that.

MEMBER SIEBER: The coatings are paint, right?

MR. DUNN: Yes.

MR. EINZIGER: But as Sam points out, this is a --

MEMBER ARMIJO: Carbon steel.

MR. EINZIGER: This is related to the austenitic steels.

MR. DUNN: Okay. Slide 6, so Task 3, integrate current user need activities into the EST program review. We are essentially looking at the objectives and tasks in active user need requests from user offices, NMSS, Nuclear Reactor Regulation, Office of New Reactor, FSME. Those are basically being reviewed and tabulated.

We have identified active user needs from NMSS, of course, that are applicable to this particular effort or that we believe are applicable for this particular effort, and also some from NRR that may also be useful or may provide useful information for the program.

We're somewhat early in this work, but we have, at least on an initial compilation, and I expect that in the course of our work, particularly after we complete our input for the Task 1 gap assessment, that we will have much more discussion with the NMSS staff on what the objective of this user need is, whether or not it's useful for the EST program.

In addition to that, we've actually looked at some active job codes that are ongoing and related to these user needs or other efforts, grants, or research programs and tried to determine whether or not these activities may also provide useful information for the Extended Storage and Transportation Program. Our input to NMSS is due in April 2012, but, again, I think that we'll have much more discussions with them probably starting the beginning of next month.

Slide 7 is Task 4, develop state-of-the-art consequence data and assessment tools. We currently have a couple of actions that are going on in this particular effort.

We have a existing contract with Oak Ridge National Lab. That contract was actually modified, and the scope of that contract modification was to provide the information to support the development and

technical basis for verifying the radionuclide inventory in casks, and that was going to be expanded out for a period, actually, beyond 300 years to provide the type of information that would be useful for the Extended Storage and Transportation Program.

We are currently working on a contracting action with the Center for Nuclear Waste Regulatory Analyses, and this particular action would be a literature review to develop technical basis for factors that are affecting release fractions and would include, you know, a summary of existing knowledge of those factors, the recommendations for parameter values and appropriate ranges, why those particular parameter ranges were selected, and identify future research that might be needed to address uncertainties in those parameter values.

Task 5 is support for the risk-informed performance-based gap assessment and enhancement for extended storage and transportation. We have provided a summary of existing technical studies and risk insights related to dry cask storage and transportation. This was our July 2011 deliverable. It is currently under review by NMSS.

One of the other activities here is identification of potential risk information needs,

and so that would include a comparison of approaches from previously performed hazard identifications. Identify whether or not the gaps exist in the identification of hazards. Are there hazards that haven't been identified? Compare how the hazards are treated in different studies.

Task 6 is identification of international programs and leverage the research that's being conducted in those programs that may be related to extended storage and transportation. We have multiple research programs that have been identified and reviewed, and these are programs where we have some ongoing or existing collaboration.

I think I talked about the Federal Institute of Materials Research Testing in Germany, where they're looking at creep and performance of seals. They also, of course, have been involved in accident analysis for casks, drop testing of casks.

We have ongoing collaborations with JNES, although that hasn't been active recently, and one of the -- probably a newer effort that may actually yield us some very useful information is a program that's being led by research staff called the International Forum for Reactor Aging Management. There are several reactor aging management programs that have existed.

All of these programs have some common features that may be useful for extended storage and transportation, including the need to have monitoring and inspection technology advancements to identify problems, degradation mechanisms, failures, identification of material aging degradation modes, and identification of the data gaps and prioritization of those data gaps, inspection protocols, mitigation methods and acceptance criteria, and, you know, identification of existing worldwide technical capabilities and expertise.

So, as part of the IFRAM effort, one of the activities that's ongoing in that particular effort that's clearly applicable to extended storage and transportation is some of the work that's being done in the degradation of concrete, because this is something that is a concern for long-term operation of reactors.

There have been concrete degradation events that have occurred in the U.S., and so there is an ongoing effort there in that program, and we're trying to leverage that information that may be useful for EST.

Task 7 is project planning for research into emergent technical issues. I think we've talked

about all of these, but let me just say up front that this is -- when we received this NMSS user need, these were issues that were identified as, you know, already rising to the top where something needs to be done to address these issues, because we know that they are significant enough to be addressed.

So the user need requested the development of draft research plans for these different issues in August of 2012. I think we're on track to do that, certainly for the concrete.

Obviously, there's been efforts there in terms of work for long-term operation of reactors, and there is a draft research plan that the RES staff has assembled. That's currently under review, and we're hoping to take portions of that plan and see how they apply for the extended storage and transportation.

We talked about the fuel cladding temperatures and the marine corrosion of stainless steels. In that particular work, the marine corrosion of stainless steels, we have kind of skipped going from the development of a draft plan in April of 2012 to actually putting a contract in place to look at some of the issues that I've put here in the sub-bullets, minimum chloride concentration for stress corrosion cracking and the susceptibility in

temperature ranges from 50 to 80 degrees C.

This is based on work that was some of the previous work that was done where stress corrosion cracking was observed at about 43 degrees C but not at 85 degrees C, and there was not temperature -- no testing done at temperature ranges in between those two values, so understanding when stress corrosion might occur, what type of chloride concentration is necessary is the focus of this effort for that.

I believe that's all I have. I certainly would take any other questions or receive comments.

CHAIR RYAN: Okay, let's go on. Jack, anything else you want to add or offer?

MEMBER SIEBER: I am aware of the 9th Circuit Court decision in California in 2007 and the Third Circuit decision on the Environmental Impact Statement that was rendered in 2009 and the Commission's position on those. It deals with exterior threats to interim spent fuel storage.

I would like at our next meeting with the appropriate security and classification procedures to address where staff is headed on that as far as addressing it in the Environmental Impact Statement, whether they will or whether they won't, and if they do, what they're going to do. This is not the forum

for that kind of discussion, so I would suggest that we address this issue at a future meeting, if we could.

Otherwise, I think that the work you're doing as you plan it out is appropriate, and I support that. On the other hand, it's too early to tell, since you haven't decided yet, what are the big issues. This is just the plan to figure out what those issues are.

Once you -- once we start to focus on the issues and the solutions to those issues, I think we'd need another update, but I think this was a timely presentation, well done, and gives us sort of a big picture view as to how you're planning the work, and I appreciate that.

CHAIR RYAN: Thank you, Jack. Yes, just a second. Any last comments?

MEMBER SKILLMAN: Thank you for the presentation.

CHAIR RYAN: Okay. Same for me. I think you've covered a lot of ground, and I wanted to leave a few minutes for any participants that are on the phone line or here in the audience to make any comments, as well.

MEMBER ARMIJO: I don't have anything

else.

CHAIR RYAN: Great. With that, are there any comments from participants on the phone line or questions?

MR. KESSLER: Yes, this is John Kessler at EPRI.

CHAIR RYAN: Okay, John.

MR. KESSLER: I think that the NRC staff did a nice job of describing what's going on in terms of R&D and a bit about the ESCP efforts. It's simply herding cats regarding international interest in extended storage. Certainly, we're going to continue to have those meetings, and NRC has been active in those programs, so we're very happy to have them.

I also thought I'd just take a minute to talk about some things at EPRI. I think it was Darrell, since I can't see faces there, mentioned the EPRI report that came out just a couple weeks ago where we did summarize what we had understood the gap analyses were, at least the draft ones at the time. We tried to compare priorities, and there's quite a few issues where there was high, medium, low priority.

For EPRI, there was really only one high priority item, and that is the stress corrosion cracking of the stainless steel canister and a little

bit of explanation why. We felt that of all the safety functions, the containment --

CHAIR RYAN: John, you're breaking up.

MR. KESSLER: Okay.

CHAIR RYAN: I don't know if you're phone's not working right.

MR. KESSLER: Let me try directly with the phone. Does that help?

CHAIR RYAN: That's much better.

MR. KESSLER: Okay, good. So, you know, containment was the primary barrier. If it was held, then a lot of the other safety functions would more likely perform over a long period of time.

The other issue is that we have not been inspecting the exterior of the stainless steel canisters for any sign of degradation. You've heard about some of the R&D going on.

So our first mission is to try to take some opportunities to go in there and actually take a look at some of the outside of the canisters that are in service right now, again, trying to pick a canister where we have a volunteer that may have these environmental conditions that you've heard about just now that might support -- and "might" is the underlying word -- support some sort of conditions

approaching stress corrosion cracking and start taking a look.

So, yes, we want to look at marine environments if we can, go through those issues, but right now EPRI is funding work involving AREVA, as you heard about, to try to see if we can come up with some opportunities so that next year maybe we've got some sort of first path at taking a look at the outside of some of these canisters. So that's EPRI's first path.

CHAIR RYAN: Well, that's great. I think it's helpful to hear those plans, and I think it'll be helpful for us to stay in tune with how they're integrated or coordinated with the activities here at the NRC and by other participants, as well, so thanks for that input. Anything else?

MR. KESSLER: Yes, just one other quick comment. I certainly have been listening to the comments about stress corrosion cracking, and this is something that industry can manage. Certainly, I appreciate that.

The concern, and I think it was alluded to by some of the comments, is that if we are now talking about conditions that might cause the stainless steel canister to breach, maybe due to stress corrosion cracking, and we're now at a shutdown site where the

spent fuel pool has long since gone, how are we going to manage that?

One of the things that industry has asked DOE to do, because ultimately from the industry perspective DOE kind of got industry in this mess, and so DOE should contribute to it, is some sort of dry transfer facility so that if the canister does degrade, maybe at one of these shutdown sites a facility could be used to transfer into a new canister, for example.

CHAIR RYAN: Okay.

MR. KESSLER: So those are the things that I understand DOE has on their longer term plan to do before --

CHAIR RYAN: Well, I think that's beyond the scope of the ACRS, so we'll just be thankful you've given us your comment.

MR. KESSLER: All right.

CHAIR RYAN: We do have some comments from NEI.

MR. MCCULLUM: Yes, this is Rod McCullum.

CHAIR RYAN: Yes, you're fine.

MR. MCCULLUM: It is? Okay. Rod McCullum, Nuclear Energy Institute. I want to thank the Committee for holding this meeting. I think this

has been very valuable, and we are glad this dialogue is going to continue.

We look forward to actively participating in your January meeting. We believe that this program, this extended storage program, can benefit from the same type of independent technical review that this Committee gave to the Yucca Mountain project as the ACNW years ago, so we look forward to that.

I heard a lot of talk about industry's objectives here, industry's needs, and I'm glad that's being aired here, a lot of very insightful questions. From an industry standpoint, what really -- the central focus, and it should always be on this focus, is we have licensed these storage casks for up to 60 years now. We've loaded 1,400 of them, and some of them have been sitting there for 20, 25 years.

So, 35 years from now, NRC, and, actually, probably 30 years, because there's a licensing lead time, NRC is going to be entertaining applications to extend the licenses beyond 60 years. DOE's decision-making has made that a certainty now, and we need to prepare for that.

Now, 30 years sounds like a long period of time, but when you realize that what this is all about is making sure that industry has the information it

needs to construct those applications and that NRC has the information it needs and the regulatory tools it needs to review those applications, and because there's a lead time to put in place the program, some of which you heard about, and because then you want to collect this information over a period of time, a fairly substantial period of time, and then there's a lead time to prepare, you know, evaluate the information and prepare the license applications, 30 years starts to become a fairly short period of time for us, so this work needs to go forward.

One of the things that I think is central to this, and John Kessler talked about the things we're trying to do with those already loaded systems, is putting in place a demo project. There are entities in industry that have already obligated a couple surplus casks that could be part of a demo project.

We could load them with high-burnup fuel. We could instrument them. We're trying to get DOE to fund that, and I know that's beyond the scope of this Committee.

However, I think that to the extent that the staff is identifying information it needs that it does not have funding for, I would certainly encourage

this Committee to bring DOE into those discussions, as you did bring the Yucca Mountain project in when you were reviewing the staff's activities at Yucca Mountain.

So, with that, again, keeping the focus on providing the information that will be needed for some license applications for beyond 60-year storage that will be coming in sooner than you might think, and this is a good dialogue to help facilitate that, and we look forward to the January meeting.

CHAIR RYAN: Thanks very much, appreciate your comment. I now ask Dr. Bley, are you on the phone?

MEMBER BLEY: I am on the phone.

CHAIR RYAN: Did you have any comments you wanted to offer?

MEMBER BLEY: I really appreciated the discussion today. I think they've done a lot of great work. I have the reservations Sam talked about. I think they need to do what they're doing to understand what the conditions are and what the uncertainties are, but before we commit to long-term cost of research, we need to make sure that the risk warrants that kind of effort. That's it.

CHAIR RYAN: Okay. Anything else?

Dennis, anything else?

MEMBER BLEY: For me, no.

CHAIR RYAN: Okay. All right. Great. Any other closing comments?

MR. RUBENSTONE: Yes, just in closing, pick up a couple things to make sure that I got the right list of what we're going to be doing going forward, certainly in preparing for the January meeting.

I think this was very useful to understand some of the Committee's concerns and areas of interest, and we're going to work to get the right players here to help air this out and delve more into the technical details that have been repeated more than once today.

We will have our draft report of the gap assessments out by that point with the prioritization, so I think that will help focus the discussions on the things that we think are important to move on right now. A couple other things, loose ends, we will certainly get that NUREG/CR copies to the Committee as soon as it's available.

Just, as the question was raised or the comment about the security-related issues, there are several initiatives underway at NRC on security for

ISFSIs and related. The most prominent, there's a proposed rule which is now being finalized on security at dry storage facilities, so that's an ongoing dialogue with the vendors and those members of the public that have access.

Again, as you noted, much of this is restricted information, but that is ongoing. If there is a need to get -- to bring that to the Committee at some future point, we'll work with NSIR, because they have the lead on that, to get that out. Yes, we're certainly aware of the Ninth Circuit decision in NEPA space, and that goes into how we're working the EIS under waste confidence.

MEMBER SIEBER: Okay. I appreciate that, and I look forward to discussing that in the future.

MR. RUBENSTONE: Yes, I think we'll work with the staff and certainly get NSIR involved. It can be done. It's just going to take a little preparation.

MEMBER SIEBER: Yes.

MR. RUBENSTONE: We'll work through that. I think that's most of what I had. I think, again, it was a very productive dialogue. I want to thank our presenters and the Committee. I thought it sent well.

CHAIR RYAN: Yes, I agree. I think it's

been a real productive meeting and look forward to many others as the work progresses, so thank you all for your time and your valuable information. Thanks so much. With that, we will close the record and close the Subcommittee.

(Whereupon, the foregoing matter was adjourned at 11:22 a.m.)

U.S.NRC
UNITED STATES NUCLEAR REGULATORY COMMISSION
Protecting People and the Environment

Enhancing the Technical and Regulatory Bases for Extended Storage and Transportation of Spent Nuclear Fuel

Advisory Committee on Reactor Safeguards

Subcommittee on Radiation Protection and Nuclear Materials

September 22, 2011

Keith Compton,
Office of Nuclear Material Safety and Safeguards

Background

Regulating Extended Spent Fuel Storage: Needs

- Potential changes to guidance and regulations
- Opportunity to improve integration of regulations and guidance governing the back end of the fuel cycle
- Development and application of risk-informed regulatory approaches

Regulating Extended Spent Fuel Storage: Approach

- Enhance technical basis for regulating extended storage of spent nuclear fuel
  - Identify technical issues associated with long-term storage and transportation
  - Focused research on technical issues of regulatory significance
- Identify regulatory framework revisions needed
- As appropriate,
  - revise regulations
  - develop or revise guidance
  - develop staff capabilities

Regulating Extended Spent Fuel Storage: Plans

- Phase 1: Identification of technical and regulatory issues associated with extended spent fuel storage
- Phase 2: Focused research and analyses
- Phase 3: Development of regulatory technical bases
- Phase 4: Regulatory framework revisions (if needed)

Regulating Extended Spent Fuel Storage: Timelines

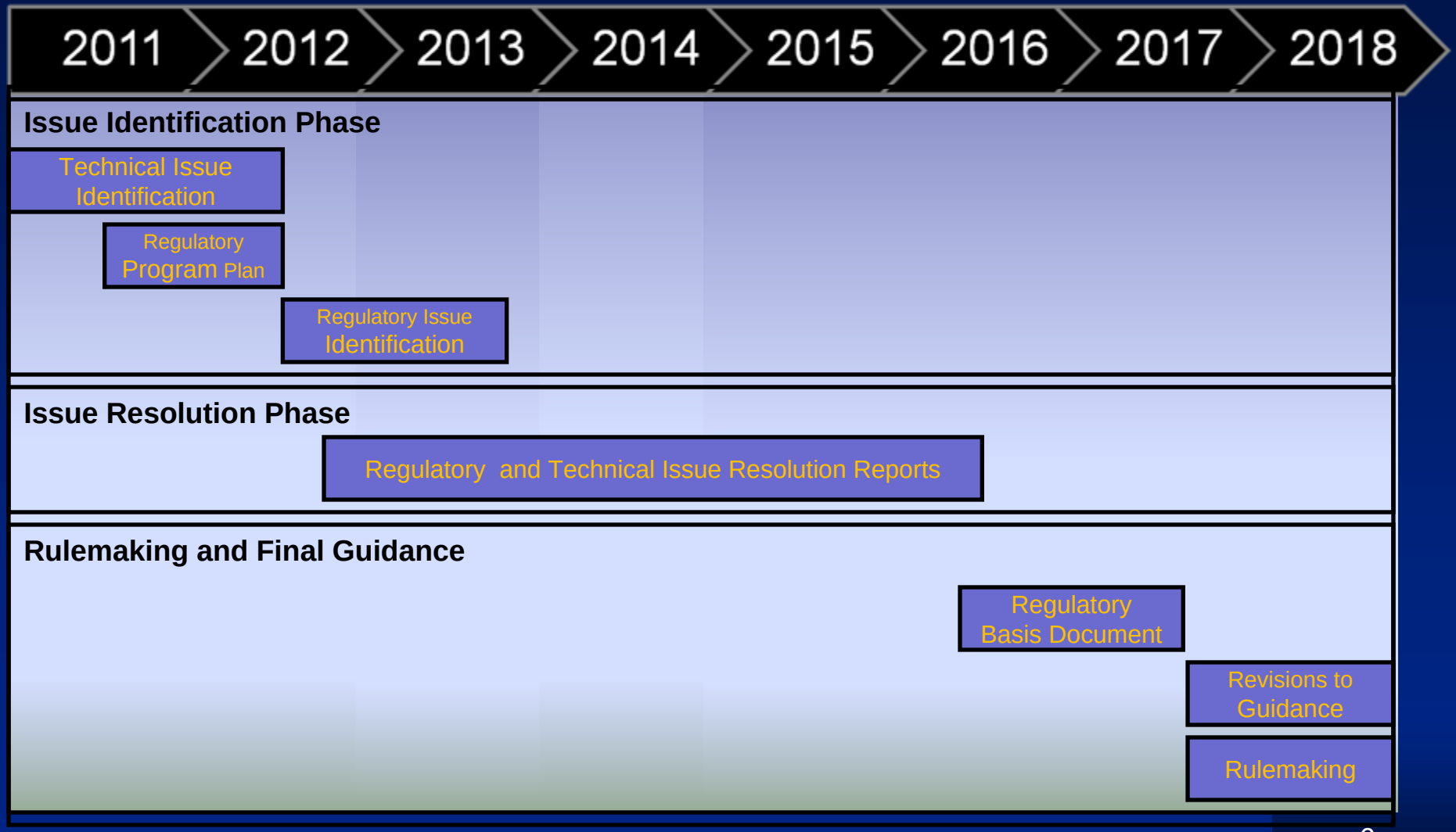

EST Technical Issues Identification

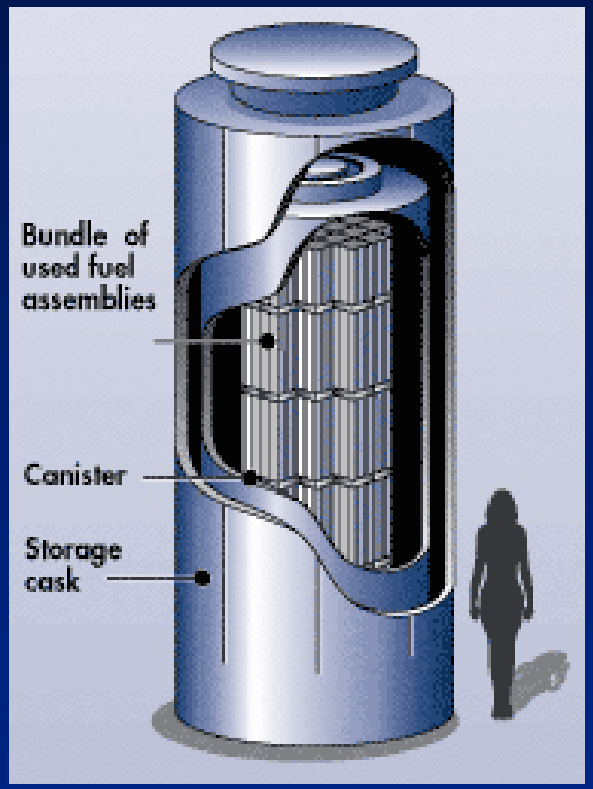

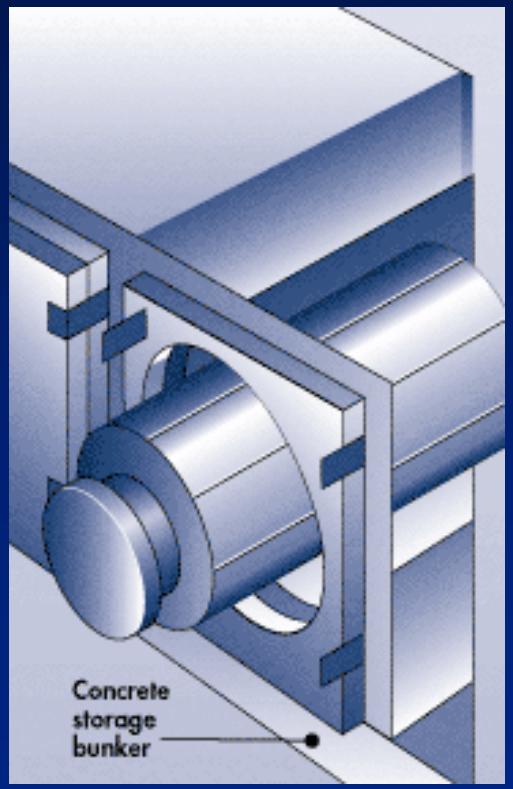

Potential Technical Issues

Cladding Integrity

- Safety Functions
  - Confinement (fission product barrier)
  - Physical integrity (retrievability and geometry control for criticality)
- Technical Challenges
  - Higher burnup levels
  - Temperature effects
  - New cladding types
  - In-situ monitoring in sealed canisters

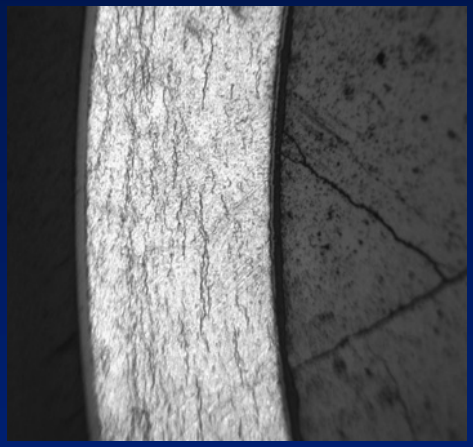

Potential Technical Issues
Canister Integrity

- Safety Functions
  - Confinement
  - Criticality control
- Technical Challenges
  - Long-term corrosion
  - Basket properties
  - Absorber efficiency
  - Monitoring sealed internals

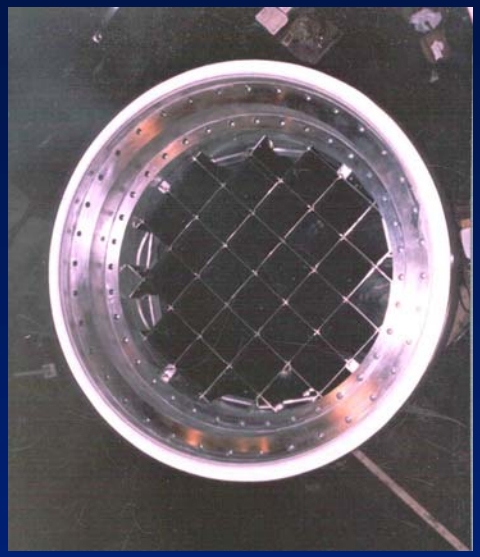

Potential Technical Issues
Overpack Performance

- Safety Functions
  - Shielding
  - Heat transfer
- Technical Challenges
  - Long-term degradation
  - Response to external natural events and external disruption

Current NRC Regulatory Framework for Storage

- Renewable Term Licenses
- Aging Management Plan
  - Time-limited aging analyses
  - Design for prevention
  - Monitoring – how, how often, in-situ
  - Maintenance – what type
  - Corrective Actions – when

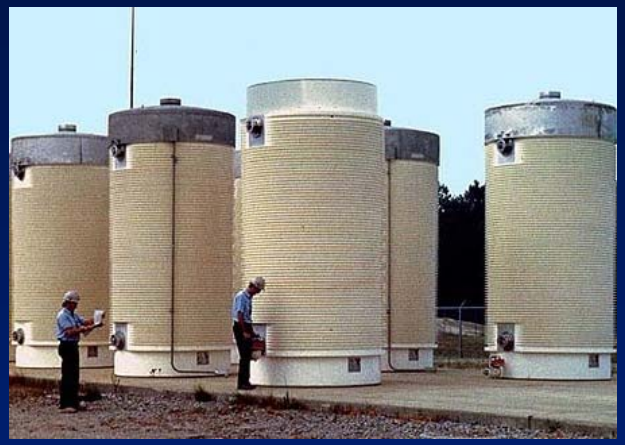

Potential Regulatory Issues

- Storage, transportation, and disposal integration
- Long term cladding integrity and retrievability
- Financial assurance issues

Summary

- NRC is preparing to
  - Enhance our regulatory framework to better support potential long-term dry storage
  - coordinate EST technical basis work with environmental impact analysis for long-term update of the Waste Confidence decision
- This work is beginning with the identification of technical issues associated with long-term dry storage
- ACRS input will be requested throughout the issue identification and resolution process

U.S.NRC
UNITED STATES NUCLEAR REGULATORY COMMISSION
Protecting People and the Environment

Extended Storage and Transportation Technical Research Program

Robert Einziger, Ph.D.
Sr. Materials Scientist
Division of Spent Fuel Storage and Transportation

U.S.NRC
UNITED STATES NUCLEAR REGULATORY COMMISSION
Protecting People and the Environment

Reasons for EST Program

- Evaluation of regulatory adequacy, and adjustment and/or development of guidance
- Determination if monitoring is needed, and when it should begin
- Inspection type that is necessary and frequency
- Age of system when repair or replacement of component is required
- Aging management analysis

What we are, are not doing

- We are:
  - Determining if regulations are adequate in light of potential material degradation
  - Establishing if additional guidance is necessary
  - Determining what kind and frequency of monitoring and inspection is necessary
- We are not:
  - Advocating 300 year storage
  - Preparing to grant 300 year licenses
  - Trying to support any particular path forward for SNF handling
  - Solving EST degradation issues

Extended Storage Cooperative Program

- EPRI provides overall management
- Loose confederacy of participants to identify technical issues with EST and volunteer to conduct research to solve issues
- Domestic participants – NRC, DOE-NE, DOE-EM, NWTRB, utilities, fuel vendors, cask vendors, EPRI
- International participants – Germany, UK, Japan, Korea, Russia, Spain, France, Hungary, IAEA

Three Step Process

- Gap analysis for components
- Short-term research and modeling on information gaps for components affecting safety
- Demonstration project to verify models and information from short-term research, and determine whether unforeseen degradation appears. Type and duration is as yet undetermined

Savannah River Laboratory Gap Analysis

- Background

  Previous analysis in 1998, 2002 did not consider high-burnup fuel, containment systems, times over 100 years, MOX, climate change etc.

- Assumptions
  - Time frames up to 300 years – picked for analysis purposes only. No technical basis
  - Retrievability may or may not be required
  - Consider HBU fuel, coastal climates, MOX

User Need with RES

- Gap analysis reconciliation
- Review of international programs and other user needs
- Risk evaluation and source term evaluation
- Stress Corrosion Cracking of canister weld under coastal and industrial environments
- Concrete degradation
- Thermal modeling of upper and lower fuel and canister temperature distributions

Center for Nuclear Waste Analysis SOW

- Evaluation of consequences of incomplete drying
- Evaluation of types of potential demonstration programs
  - Cadillac – multiple fuels, storage systems, pre-, and post characterization
  - Minimal – open a cask or two, or additional on-site monitoring
  - Anything in-between

Prioritization - 1

- Relate components to regulatory requirements
- Estimate state of knowledge of degradation initiation, rate, completion for each component degradation mechanism. Estimate state of monitoring and inspection capability
- Estimate relative importance of degradation to meeting the safety and regulatory requirements

Prioritization - 2

- Prioritization will be done by knowledgeable RES and NMSS staff
- Expert opinion will be used, along with RES integration of gap studies
- Highest priority – Degradation leading to largest safety issues, and where we have the least information
- Lowest priority – least safety significant with highest knowledge

RES Synthesis of Technical Issues

Darrell Dunn
RES/DE/CMB

ACRS Briefing
September 22, 2011

NMSS 2011-002: Extended Storage and Transportation Regulatory Program Review

- NMSS UNR Issued: March 17, 2011
- RES Response: June 15, 2011
- Key dates
  - July 2011: Summary of existing technical studies and risk insights
  - September 2011: Gap synthesis report (draft) input
  - October 2011: Summary of international efforts
  - April 2012: State-of-the-art tools and methods for EST consequence analyses and future needs
  - April 2012: Draft project plans for SCC, concrete degradation, and minimum fuel temperature distributions

Task Summary

1. Provide Input to Extended Storage and Transportation (EST) Gap Assessment
2. Participate in the EPRI Extended Storage Collaboration Program (ESCP)
3. Integrate Current User Need Activities into the EST Program Review
4. Develop state-of-the-art consequence data and assessment tools
5. Support the Risk Informed Performance Based (RIPB) Gap Assessment and RIPB Enhancements for EST
6. Identify international programs and leverage research related to EST
7. Project planning for research for emerging technical issues on stress corrosion cracking of stainless steels, concrete degradation, and fuel temperature distributions

Task 1: Input to EST Gap Assessment

- Input to the gap synthesis to be provided by RES staff
- Synopsis of assessments of degradation process
  - Nuclear Waste Technical Review Board (NWTRB)
  - Department of Energy (DOE)
  - Savannah River National Laboratory (SRNL)
  - Electrical Power Research Institute (EPRI) – Extended Storage and Collaboration Program (ESCP)
- Additional degradation processes identified
- Reconciliation
  - State of knowledge on condition or degradation process for dry cask storage systems
  - Identification of needed information

Task 2: Participate in the EPRI Extended Storage Collaboration Program (ESCP)

- May 2011 meeting (NEI conference)
  - Formation of working groups
- August 2011 Meeting at NRC
  - NRC and Transnuclear
  - Discussion of sampling deposits on actual dry casks and environmental conditions including temperature and relative humidity

Task 3: Integrate Current User Need Activities into the EST Program Review

- Objectives and tasks of active UNR from NMSS, NRR, NRO and FSME are being reviewed and tabulated
  - Relevant active UNRs identified from NMSS and NRR
- Active UNR tasks and JCNs will be identified that may be beneficial to EST regulatory program review

Task 4: Develop State-of-the-art Consequence Data and Assessment Tools for EST

- ORNL:
  - Information to support the development of a technical basis for verifying the radionuclide inventory in casks
  - Expand the data compiled to now include a technical basis (with the use of available assay data, etc) for the NRC's prediction of SNF nuclide inventory to 300yrs
- CNWRA:
  - Literature review to develop technical bases for factors affecting release fractions

Task 5: Support the RIPB Gap Assessment and Enhancements for EST

- Summary of existing technical studies and risk insights related to dry cask storage and transportation (under review by NMSS)
- Identification of potential risk information needs
  - Compare approaches for previously performed hazard identifications
  - Identify whether gaps exist in identification of hazards
  - Compare how hazards are treated in different studies

Task 6: Identify International Programs and Leverage Research Related to EST

- Multiple NRC/RES programs identified and reviewed:
  - **BAM**: The Federal Institute for Materials Research and Testing of Germany
  - **JNES**: The Japan Nuclear Energy Organization
  - **IFRAM**: International Forum on Reactor Ageing Management
- Reactor aging management programs
  - Monitoring and inspection technology advancement
  - Identification of aging materials degradation modes and related data-gaps prioritization
  - Inspection protocols, mitigation methods, and acceptance criteria
  - Identification of existing world-wide technical capabilities and expertise, and establishing knowledge sharing framework

Task 7: Project Planning for Research into Emerging Technical Issues

- Marine corrosion of stainless steel casks
  - Minimum Cl concentration for SCC
  - SCC susceptibility at temperatures between 50 to 80˚C
- Concrete degradation issues for extended storage structures
  - Draft research plan for concrete under review
- Improved estimates of fuel cladding temperature distributions
  - Draft research plan for dry cask thermal analysis in under review.
  - Computational Fluid Dynamics will be used to determine the temperature profiles