Official Transcript of Proceedings

NUCLEAR REGULATORY COMMISSION

Title: Advisory Committee on Reactor Safeguards
ABWR Subcommittee - Open Session

Docket Number: (n/a)

Location: Rockville, Maryland

Date: Tuesday, June 21, 2011

Work Order No.: NRC-964 Pages 1-123

NEAL R. GROSS AND CO., INC.
Court Reporters and Transcribers
1323 Rhode Island Avenue, N.W.
Washington, D.C. 20005
(202) 234-4433

DISCLAIMER

UNITED STATES NUCLEAR REGULATORY COMMISSION'S ADVISORY COMMITTEE ON REACTOR SAFEGUARDS

The contents of this transcript of the proceeding of the United States Nuclear Regulatory Commission Advisory Committee on Reactor Safeguards, as reported herein, is a record of the discussions recorded at the meeting.

This transcript has not been reviewed, corrected, and edited, and it may contain inaccuracies.

UNITED STATES OF AMERICA

NUCLEAR REGULATORY COMMISSION

+ + + + +

ADVISORY COMMITTEE ON REACTOR SAFEGUARDS

(ACRS)

+ + + + +

ABWR SUBCOMMITTEE

+ + + + +

OPEN SESSION

+ + + + +

TUESDAY, JUNE 21, 2011

+ + + + +

ROCKVILLE, MARYLAND

+ + + + +

The Subcommittee met at the Nuclear Regulatory Commission, Two White Flint North, Room T2B1, 11545 Rockville Pike, at 8:30 a.m., Said Abdel-Khalik, Chairman, presiding.

COMMITTEE MEMBERS PRESENT:

SAID ABDEL-KHALIK, Chairman

J. SAM ARMIJO, Member

MICHAEL CORRADINI, Member

JOHN W. STETKAR, Member

CHARLES H. BROWN, Member

MICHAEL T. RYAN, Member

CONSULTANTS TO THE SUBCOMMITTEE PRESENT:

GRAHAM B. WALLIS

NRC STAFF PRESENT:

MAITRI BANERJEE, Designated Federal Official

GEORGE WUNDER

MICHAEL EUDY

EDWARD STUTZCAGE

CHARLES HINSON

ED ROACH

STEPHEN WILLIAMS

TODD HILSMEIER

ALSO PRESENT:

SCOTT HEAD

COLEY CHAPPELL

MILTON REJCEK

EVANS HEACOCK

STEVE THOMAS

RICK SUMMITT

TOM DALEY

C-O-N-T-E-N-T-S

Opening Remarks - Said Abdel-Khalik, ACRS 4

NRO/NINA Staff Introductions

George Wunder, NRO 6

Scott Head, NINA 7

STP COLA FSAR Chapter 12 SER with No Open Items

NINA 7

NRO 26

ACRS Action Item: D-RAP

ACRS Action Item 30

NRO 51

NINA 51

ACRS Action Items 42, 70, 71, 87, 89 84

Public Comment 120

Adjournment 123

P-R-O-C-E-E-D-I-N-G-S

8:29 a.m.

CHAIRMAN ABDEL-KHALIK: The meeting will now come to order. This is a meeting of the ABWR Subcommittee of the Advisory Committee on Reactor Safeguards. I'm Said Abdel-Khalik, Chairman of the Subcommittee.

ACRS members in attendance today are Charlie Brown, Sam Armijo, Mike Ryan and John Stetkar. Mike Corradini is expected to join us later this morning.

We also have with us our consultant, Graham Wallis. Ms. Maitri Banerjee is the Designated Federal Official for this meeting.

As announced in the Federal Register on June 13th, 2011, we were scheduled to discuss Chapters 2 and 12, along with Attachment A to Section 19.14, and resolution of several issues related to long-term cooling in the Staff Safety Evaluation Report related to the COL application submitted by the Nuclear Renovation North America for two ABWR units at their STP site in Texas.

However, the staff informed us late last week that they decided not to present Chapter 2 during today's meeting due to a nonconcurrence yet to be

resolved. Hence, our subcommittee briefing on Chapter 2 will be rescheduled to a later date.

Also, we ask and expect that the staff will fully brief us at that time, on matters related to this nonconcurrence, including a presentation by the staff member issuing the nonconcurrence.

Chapter 12 was presented to us late last year when the SER had open items. And at today's meeting, the staff will discuss how they resolved these open items.

The staff and the applicant will also discuss follow-up action items form previous ABWR subcommittee meetings.

The rules for participation in today's meeting were announced in the Federal Register on June 13th, 2011, for an open/closed meeting. Parts of this meeting will be closed to the public to protect proprietary and security-related information.

I am asking the NRC staff and the applicant to verify that only people with the required clearance and need to know are present before we enter in such discussion.

We have a telephone bridge line for the public and stakeholders to hear the deliberations. This line will not carry any signal from this end

during the closed portion of the meeting.

Also, to minimize disturbance, the line will be kept in a listen-in-only mode until the end of the meeting when 15 minutes are allocated for public comments.

At that time, any member of the public attending this meeting in person or through the bridge line, can make a statement or provide comments if they desire.

As the meeting is being transcribed, I request that participants in this meeting use the microphones located throughout this room when addressing the subcommittee.

Participants should first identify themselves and speak with sufficient clarity and volume so that they can be readily heard.

We will now proceed with the meeting, and I call on Mr. Mark Tonacci of NRO to begin the presentation.

MR. WUNDER: Mr. Chairman, this is George Wunder. I'll be speaking for Mark today.

We have nothing further to add. Thank you for your remarks on the deferred chapter, and we look forward to presenting it to you in the future.

CHAIRMAN ABDEL-KHALIK: Right. I have a

question with regard to the procedure for deferring presentation in situations of this type.

Is it the policy of the Agency to defer presentations until the nonconcurrence is resolved?

MR. WUNDER: I believe in accordance with our Management Directive, a nonconcurrence is supposed to be resolved before the issuance of a document.

CHAIRMAN ABDEL-KHALIK: Okay. Thank you.

At this time, we'll move on to the applicant's presentation. Mr. Head.

MR. HEAD: Thank you. I appreciate this opportunity to brief the ACRS on a number of topics today, and we will start off with Chapter 12. It's out standard agenda. And today, it will be myself and Coley.

We also have Milton Rejcek, Tom Daley and Bob Quinn that are with us to help us, assist us with any part of the briefing.

So, I turn it over to Coley at this point.

MR. CHAPPELL: Good morning. Coley Chappell with STP 3 & 4 licensing.

A recap of our previous presentation for Chapter 12, we had discussed departures in Chapter 12 and consistency changes with other departures, as well as some supplemental information that was provided in

Chapter 12 to address COL items.

Since that meeting, a couple of additional items that we want to bring up in this presentation have been added to the application to provide any supplemental information, to enhance a description of the condensate storage tank and radiation source term, and to also describe the source term for the spent fuel pool.

The first item is the condensate storage tank supplemental information. There were a number of RAIs that were responded to in order to provide supplemental information to describe the condensate storage tank which is located outside of the radwaste building and to the west of the turbine building.

The detailed design of it was provided to the staff. This information was not provided in the DCD -- the ABWR DCD. The condensate storage tank was described in a different system as part of the makeup water condensate system.

As you can see on the slide, the drain is - there's a drain from the dike area that surrounds it, to contain any spill. And there's also alarms to indicate abnormal level in the condensate storage tank.

Part of the analysis, it was determined

that the source term and the condensate storage tank provided an activity that was small. On the order of 0.1 millirem per hour.

Therefore, no radiological controls or radiation shielding was determined to be required for the design.

The enclosure is constructed so that controls can be implemented during an abnormal event.

MEMBER RYAN: Are you going to talk a little bit about the details on those controls, Coley?

MR. CHAPPELL: The design has a berm. So, it's an enclosed structure around the tank. So, if there's any spillover, it would be contained in the berm and is designed to contain the entire contents of the condensate storage tank.

And we would also have the ability to monitor. So, if there's any type of abnormal event, radiation protection can implement monitoring and restrict access to the tank area.

MEMBER RYAN: Okay. And the berm is made out of?

MR. CHAPPELL: It's a concrete berm.

MEMBER RYAN: Okay. So, it's robust in terms of holding a liquid for some period of time.

MR. CHAPPELL: Yes.

MEMBER RYAN: Okay.

MR. CHAPPELL: And it's covered to prevent any intrusion.

MR. CHAPPELL: All right, yes.

MR. CHAPPELL: Not shine, just precipitation.

MR. CHAPPELL: Oh, rain. Okay. All right. Fine. Thank you.

CHAIRMAN ABDEL-KHALIK: How tight is that cover?

Is it a real roof over it?

MR. CHAPPELL: It's just intended just to prevent moisture from falling into the berm and filling it up and raining. So, it's not an airtight -

MEMBER RYAN: It's a roof shed kind of thing.

MR. CHAPPELL: Yes, cover.

MEMBER RYAN: Made out of?

MR. CHAPPELL: I'm not sure of the exact material. I think it's a metal cover.

MEMBER RYAN: Okay.

MR. CHAPPELL: We can check on that.

MEMBER ARMIJO: Do you have a sketch of that berm?

Is there a large diameter compared to the

tank itself or is -

MR. CHAPPELL: It is. We describe it in the application in the dimensions, and it's large enough to contain the entire contents of the tank.

MEMBER RYAN: With any margin, or is it - I mean, is it 1.6 times the tank volume capability or 1.01?

MR. CHAPPELL: We'll have to check on the margin.

MEMBER RYAN: Yes, because that's kind of important because if the tank does let go, you have a rain event, it's half full of rainwater or a hurricane, you know, there's lots of reasons why water could get into an open berm like that.

So, it would be helpful to know the margin against the tank volume, I guess is what I'm thinking.

MR. HEAD: Obviously we have incentive given where this is piped or routed to, to maintain the integrity of - because, you know, rainwater will then end up being processed.

MEMBER RYAN: Sure. Yes.

MR. HEAD: And so our incentive is to keep it -

MEMBER RYAN: Processing rain is not good.

MR. HEAD: That's not good.

And then, you know, obviously you mentioned hurricanes. You know, what we do with tanks and processing that we would take into account prior to a hurricane arriving is all part of the planning process.

MEMBER RYAN: Okay.

CONSULTANT WALLIS: Now, there's strainers at the bottom of this?

MR. CHAPPELL: There's a drain system that's capable of -

CONSULTANT WALLIS: So, if you got debris in there from stuff blowing in there into the shed, what do you have to ensure that the drain doesn't get blocked?

I'm sorry to bring up strainers at this early point.

MR. CHAPPELL: Yes, it is kind of early. Hurricanes, you know, topped it off.

So, Milton, would you comment on that?

MR. REJCEK: This is Milton Rejcek, South Texas Units 3 and 4, NINA. I think you need a little better picture or understanding of the berm and cover.

The cover covers the entire berm from the roof of the tank out to the edge. And the concrete portion is tall enough that you actually have a

stairwell, you know, metal stairwell to go up. And then there's an enclosure there, a door to go into. So, you'd have to go all the way back down into the berm to get to the bottom of the tank.

So, the roof cover, again part of lessons learned from having to operate a plant, keep the birds and the rainwater and all the rest of the stuff in that would obviously be a pain to process for -

CONSULTANT WALLIS: So, birds can get in. Can they nest in there, for instance?

MR. REJCEK: Well, I haven't seen the actual detail - design to that level of detail. So, yes, I'm sure they probably can.

(Laughter.)

MR. HEAD: Yes, I haven't seen a bird yet. But if there's an appealing place, we'll be obligated to periodically clean that our like we do other structures at the site.

MR. REJCEK: Well, I'm hoping that it would be on the outside and not actually be able to get inside the thing.

MEMBER RYAN: We could probably just if we have a drawing or cutaway, some kind of 3D drawing of it, it would be helpful to resolve some of these -

MR. HEAD: Okay.

MR. CHAPPELL: And we do have the capability to drain that berm.

CONSULTANT WALLIS: So, given no details of the drain, we just have to accept that you're going to take care of it.

MR. HEAD: Well, like I say, I don't think it's an exotic drain.

CONSULTANT WALLIS: Yes, but it's the debris in the strainer. That's -

MR. HEAD: Actually, obviously we've minimized the potential for debris just by the -

MEMBER RYAN: With a cover.

CONSULTANT WALLIS: Minimize doesn't mean anything to me, ever. Minimize is zero unless you have a constraint.

MR. HEAD: If the tank were, you know, the berm, the berm is almost not doing it justice. This concrete structure can withstand the entire contents of the -

MEMBER RYAN: But the word "berm" --

MR. HEAD: I know. I understand.

MEMBER RYAN: But I think if we just had, you know, maybe a little bit more of a detailed sketch of how the arrangement is going to set up, it would help resolve some of these questions and then, you

know, off we go from there.

MR. HEAD: Okay. That may be something that we might be able to provide to you after lunch.

Is that feasible?

MEMBER RYAN: That's fine.

MR. HEAD: We might be able to, you know, pass a laptop around or something and show what it looks like, okay?

MS. BANERJEE: I noted it down.

MR. CHAPPELL: Any other questions on the condensate storage tank?

(No response.)

MR. CHAPPELL: All right. The next topic, spent fuel radiation sources, we had two tables in Chapter 12 that had applicant information items to address the source term and radiation dose to operators, and field operations of the spent fuel pool due to the spent fuel pool activity.

We responded to the RAIs and provided the design features and access controls, as well as the source term and geometry that developed the maximum dose rate to operators.

The dose rate due to the maximum activity bundle with additional margins that was added in, resulted to a dose to the operator that was less than

half of the limit that was the reference from the ANSI section.

This information also resulted in a supplemental Appendix 12B which described in considerable detail how we developed this dose rate, dose term to the operator.

And the summary for Chapter 12, we've addressed the COL items. There are no -- requests for additional information have not been addressed, and open items have been resolved with the staff.

MEMBER RYAN: Thanks, Coley.

CHAIRMAN ABDEL-KHALIK: Are there any questions for the applicant from Chapter 12?

MEMBER STETKAR: Yes.

CHAIRMAN ABDEL-KHALIK: John.

MEMBER STETKAR: Section 12.4.3, you reduce the personal exposure hours - this is radwaste building doses.

You reduce the personal exposure hours from 4200 person-hours per year to a thousand person-hours per year.

Based on a 2001 EPRI Technical Report 1003063 that cites performance evaluation of advanced liquid -- low-level liquid waste processing technology for BWRs, do you know whether any of the operating

experience cited in that report pertains to the type of modular, portable waste-processing systems that you're going to install in your plant?

I mean, I don't have any firsthand experience to know whether the doses would be higher or lower compared to, you know, a fixed in-place hard-pipe system modern technology.

MR. CHAPPELL: You're talking about Section 12.4.2?

MEMBER STETKAR: My note says 12.4.3, but I don't type all that well. It's Table 12.4-1, Coley.

MR. CHAPPELL: Okay.

MEMBER STETKAR: That lists the personal exposure hours.

MR. HEAD: You know, Milton has briefed us on that before in a previous discussion with Milton.

MEMBER STETKAR: Okay. Maybe I missed that.

MR. HEAD: No, no, no. It was not in that specific content.

So, Milton, if you want to go ahead and -

MR. REJCEK: This is Milton Rejcek, STP 3 and 4, NINA.

Yes, we talked about this at the first ACRS session just briefly. Didn't go into a lot of

details, but that report formed the basis of the calculations that Sargent Lundy did.

And it does cover - it was comparing evaporators and those type of systems to actually a Thermex -

MEMBER STETKAR: Okay.

MR. REJCEK: -- if you're familiar with the brand name, system. And at any rate, yes.

MEMBER STETKAR: Okay.

MR. REJCEK: We thought it was very applicable, and we used those same rough factors of decrease in dose and maintenance hours and so forth to come up with that.

MEMBER STETKAR: Great. Thanks. I forgot about -

MEMBER RYAN: John, I think the answer I took is that technology change was the -

MEMBER STETKAR: The technology change from evaporators to different processing technology.

MEMBER RYAN: Correct.

MEMBER STETKAR: Not necessarily fixed sources.

MEMBER RYAN: Correct, right.

MEMBER STETKAR: This is portable, okay. Thanks. And I apologize. I forgot.

MEMBER RYAN: No problem.

MEMBER STETKAR: The other thing I noticed is for - and this is Section 12.5 - 12.5.4. In regards to the availability of instrumentation to monitor conditions during an accident, it sounds like you plan to have one central location for all four units; is that correct?

In particular, it says STP health physics program procedures training curriculum will be expanded and modified as necessary to meet the requirements while operating units that additional air sampling equipment will be shared among the four units and that additional sampling equipment will be procured as needed. So, you plan to have a single facility to support all four units in the event of an accident.

And the question obviously in light of recent events is, do you plan to have enough equipment to share multiple events at multiple units, or is the inventory of equipment designed to be only enough presuming you only have one accident at one unit at one time?

MR. HEAD: Well, Milton, can you answer the first question? Is there a common area?

And then I'll try to answer the second

one.

MR. REJCEK: Again, Milton Rejcek, Texas 3 and 4.

There's not a common area of like a separate building or anything like that. What we're referring to in that section was dealing with your normal operating equipment.

I don't think it was intended to address necessarily emergency situations and emergency supplies.

It was - it's the fact that you would use your radiation monitoring equipment for outages you might have stored in one unit, you know. Between the four units, you'd have enough to support whichever units during an outage.

MEMBER STETKAR: No, this says - this section addresses portable instruments and operating reactors that accurately measure radioiodine concentrations in plant areas under accident conditions.

That's a quote from the SER. I can go back and look at the FSAR.

MR. REJCEK: I -

MEMBER STETKAR: It says in response to RAI 12.05-6 dated February 8th, 2010, the applicant

clarifies that the information included in the FSAR reflects the equipment and programs currently in place for STP Units 1 and 2, and acknowledges that additional equipment will be needed to purchase to support four-unit operation.

So, that sort of led me to believe that if something happens, you have a central repository of additional monitoring equipment that people then go to and fetch what they need.

MR. REJCEK: No, the way we personally do it now, we've just got the equipment in each of the units.

MEMBER STETKAR: Okay.

MR. REJCEK: And basically when one unit goes into outage, we'll draw the equipment out of the other unit to support the other outage. So, that was my understanding.

Now, there are locations in the plant where we could store extra equipment, of course, but I didn't think we were going to do anything differently than we were presently doing at 1 and 2.

Now, obviously with recent events, we can certainly go back and relook at that.

MR. HEAD: Well, yes. That's the second part of the question.

MEMBER STETKAR: The first was sort of the basic philosophy of, you know, where people go to, to fetch what they need.

MR. HEAD: Right.

MEMBER STETKAR: And I think I understand that, that -

MR. HEAD: There may be some components that are either you don't have as many of or they're more expensive or whatever that we might move from unit to unit for outages or other things or, you know, things that we have going on, but there's not a central area for that.

MEMBER STETKAR: There isn't, okay.

MR. HEAD: You know, Unit 1 and 2 have their own areas.

MEMBER STETKAR: Units 3 and 4 will have their own areas.

MR. HEAD: Will have their own areas, and we'll transfer as necessary. Because at that point in time, there will be one HP Department -- Health Physics Department.

The second question or aspect of it, I mean, we, you know, we obviously - all of us are looking forward to the, you know, decisions and concepts that we have to do with respect to Fukushima.

And that hasn't been -

MEMBER STETKAR: And I fully recognize that's an evolving process. I was a little bit more concerned the way this was worded, that indeed there was plans to have, you know, a central site facility that would be stocked and then, you know, what's the basis for the inventory in that facility.

But you've basically answered the - my main concern. So, thanks.

CHAIRMAN ABDEL-KHALIK: So, what is the answer to the second question? Were we just sort of waiting for the lessons learned?

MR. HEAD: Well, you know, no, sir, we're not waiting. We're obviously contemplating a number of aspects that have arisen with the Fukushima event. And, you know, this would be a part of it.

I haven't heard much discussion on this aspect of it. But in terms of us presenting what we'll do and how we will support multiple accidents, you know, with, say, you know, detector equipment, you know, we don't have a specific answer on that at this point.

Obviously, we will at some point in time.

CHAIRMAN ABDEL-KHALIK: But in terms of timing, is this something that we need to keep track

of?

MR. HEAD: Well, I think that's an interesting question.

Right now our COL does not reflect, you know, the Fukushima event. We're expecting the NRC to, you know, establish expectations with regard to that. And we're expecting to have to react to that, and we will.

In parallel, obviously industry and we are looking at, you know, what we think needs to take place and would happen, but I don't see that as a COL review at this point in time at least with respect to the chapters that we're presenting to you because we've not, you know, specifically accommodated that in our application.

CHAIRMAN ABDEL-KHALIK: But Fukushima aside, these are legitimate questions.

MR. HEAD: Absolutely.

CHAIRMAN ABDEL-KHALIK: And, therefore, I guess we'll have to think about the timing and whether or not the statement you made as to whether or not these questions are COL-related.

MR. HEAD: I mean, in terms of where we are right now, if the structure for 1 and 2 if there was, for example, an accident in both Units 1 and 2, you

know, between the technical support centers and the EOF we would be managing, you know, the radiological, you know, equipment that we have available to us.

The EOF would be immediately talking to other sites in the government to see about getting additional equipment in.

So, this aspect of it right now, I know we can mitigate with 1 and 2. And I expect that sort of coordination would take place if all four units were in some sort of distress, you know, similar distress.

So I think, you know, our plans and our processes right now would put us in a position where we could get the equipment we need, we can make the appropriate decisions about where we send our current equipment, and we would be taking actions to get additional equipment in if necessary.

CHAIRMAN ABDEL-KHALIK: Okay. We'll just sort of revisit this question from a philosophical standpoint -

MR. HEAD: Okay.

CHAIRMAN ABDEL-KHALIK: -- as to what is COL-related and what's not.

MR. HEAD: Okay.

CHAIRMAN ABDEL-KHALIK: Okay.

Are there any additional questions for the

applicant on Chapter 12?

CONSULTANT WALLIS: Well, there's a picture on the last slide.

Where is this condensate storage tank?

MR. CHAPPELL: It's right here.

CONSULTANT WALLIS: It's there, but I don't see much room for a dike and a shed.

MR. CHAPPELL: That's just a picture.

CONSULTANT WALLIS: No, but, I mean, the details are important in these things.

MR. CHAPPELL: Not in this picture.

CONSULTANT WALLIS: Not in this picture, but eventually they are important.

MR. HEAD: This was an early marketing, you know, presentation as to where the site would exist, what it would look like with respect to the reservoir.

Engineering detail, design, this was not meant to keep up with, you know, what we are anticipating.

CHAIRMAN ABDEL-KHALIK: Thank you.

At this time, we'll go to the staff's presentation on Chapter 12.

MR. EUDY: Good morning. I'm Michael Eudy, Chapter PM for ABWR and NRO. This morning we'll be presenting the staff's findings for Chapter 12.

Listing the project managers and the technical staff reviewers, Charles Hinson, Steve Williams and Ed Stutzcage. This morning Ed Stutzcage and Stephen Williams will be presenting our slides.

Just a chapter summary of what we plan to present today. All open items discussed previously at last year's meeting for Chapter 12 have been closed.

We have five items of interest involved in Section 12.2. Ed Stutzcage will be presenting condensate storage tank information and spent fuel pool radiation source.

And Stephen Williams will be presenting the final slides for annual liquid and gaseous effluent source term evaluation.

At this time, I'll turn it over to Ed Stutzcage.

MR. STUTZCAGE: Hi, I'm Ed Stutzcage. Just a little background on myself, I have a health physics bachelor's degree from Hillsboro University in Pennsylvania, and been with the NRC for about 20 months.

First topic of interest that I'd like to cover is the addition of the condensate storage tank source term information in Section 12.2.

Previously, neither the STP FSAR nor the

ABWR DCD specified source term information for the CST.

Based on several Chapter 11 RAIs, staff issued RAIs 12.02-18 and 12.02-21 requesting that the applicant modify the FSAR to include information on condensate storage tank source term, geometry, radiation levels, underground piping and radiation protection controls in the STP FSAR.

In response to the RAIs, the applicant proposed a modified STP FSAR adding the requested CST source term information.

The staff finds the applicant's response and the proposed FSAR revisions to be acceptable. The item is being tracked as Confirmatory Item 12.02-21.

CONSULTANT WALLIS: The dose rate, I mean, where is the person who is getting this dose?

MR. STUTZCAGE: This is 30 centimeters from the condensate storage tank.

CONSULTANT WALLIS: So, he's a foot away from the tank?

MR. STUTZCAGE: Yes.

CONSULTANT WALLIS: Just standing there?

MR. STUTZCAGE: Yes.

CONSULTANT WALLIS: And there's nothing in the berm at each of those.

MR. STUTZCAGE: No, there would be nothing in the berm.

CONSULTANT WALLIS: Just standing beside the tank.

MR. STUTZCAGE: Yes.

CONSULTANT WALLIS: Okay. Thank you.

MR. STUTZCAGE: Is that all? Any more questions on the condensate storage tank?

CHAIRMAN ABDEL-KHALIK: What is it that you would track with a Confirmatory Item in this case?

MR. STUTZCAGE: Well, all the -

CHAIRMAN ABDEL-KHALIK: That you would confirm.

MR. STUTZCAGE: Well, we're just confirming that the proposed FSAR revisions will be added to the FSAR.

MS. BANERJEE: FSAR documentation.

CHAIRMAN ABDEL-KHALIK: Okay.

MR. STUTZCAGE: Yes, because the -

MS. BANERJEE: Nothing technical.

MR. STUTZCAGE: All right. For the spent fuel pool as STP already discussed those, spent fuel pool source term and geometry information was not included in the ABWR certified design document early STP COLA FSAR.

DCD source term tables 12.5A and 12.5B which provide source term information for radioactive sources outside the reactor vessel, only reference applicant for the spent fuel pool.

Therefore, spent fuel pool source term and geometry information was treated in the DCD as in a numbered COL license information item.

Staff issued RAIs 12.2-14 and 12.2-20 requesting that the applicant provide the missing source term information in the STP FSAR in order for the staff to be able to evaluate the estimated dose rates in rooms adjacent to the sides of the spent fuel pool from spent fuel, and the estimated dose rates to an operator from a raised spent fuel pool assembly during refueling operations.

In the applicant's initial response to RAI 12.2-20, STP proposed to add supplemental spent fuel pool source term information in Chapter 12.

During their review, the applicant and staff identified an apparent unit's error in DCD Tables 12.2-3b and 12.2-3c which provided gamma ray source term data for the core post-operation and gamma ray source term data external to the core.

Because of inconsistencies in the DCD and COL information resulting from the apparent unit's

error, and to evaluate the applicant's spent fuel dose rate calculations, and to verify that the applicant's proposed supplement would adequately address the COL commitment, staff conducted an audit of the applicant on January 13th, 2011.

As a result of the audit and further discussions with the applicant, the applicant issued a revised response to RAI 12.2-20.

In the revised response, the applicant proposed to add the following supplemental information to Chapter 12: Detailed spent fuel pool and individual raised fuel assembly source term and dose rate information; an alternative table containing post-operation gamma source term data which the applicant used for their spent fuel pool calculations; and a spent fuel pool layout and dimensional drawing.

Staff found the applicant's proposed FSAR revisions in response to 12.2-20 acceptable. And that item is being tracked as Confirmatory Item 12.2-20.

Back to the unit's errors in Table 12.2-3b and 12.2-3c. Since both of the incorrect DCD tables were incorporated by reference in the STP FSAR, the staff requested that the applicant correct the apparent unit's errors in the tables and provide examples supporting their calculations - their

conclusion that gamma source terms of the appropriate magnitude were used in the design of the ABWR facility, including its shielding design and equipment qualification.

In response to the staff concerns, the applicant proposed a departure from the ABWR DCD which adds a footnote to both of these tables.

This footnote precludes the COL licensee from using information in these tables for detailed facility design, or as the basis for any changes to the FSAR.

On the basis of the staff's independent analysis of the plant shielding design, and upon review of the applicant's examples supporting the applicant's conclusion that source terms of the appropriate magnitude were used in the design of the ABWR facility, the staff concludes that this issue has been adequately resolved pending the inclusion of the proposed FSAR revisions.

That's all I have on the spent fuel pool. Any -

CHAIRMAN ABDEL-KHALIK: What is the logic of adding a footnote saying don't use this table other than collecting the information?

MR. STUTZCAGE: We initially - we proposed

that they'd correct the tables. And STP decided that in lieu of that, they prefer to add a footnote preventing the use of the tables.

And based on our conclusion by reviewing Chapter 12 figures and other examples from STP, the error appears to be just - it is just a unit's error from in the tables. Doesn't have any other significance to the -

MEMBER STETKAR: If I read the whole thing, though, they originally used the wrong numbers in their original calculation; is that correct?

MR. STUTZCAGE: The ABWR DCD, it had the incorrect numbers.

MEMBER STETKAR: Did South Texas use those original wrong numbers in the first submittal to -

MR. STUTZCAGE: It was going to be referenced as part, but they -

MEMBER STETKAR: Okay. They didn't recognize the error, is what I -

MR. STUTZCAGE: No.

MEMBER STETKAR: Until you pointed it out to them for their specific plant; is that correct?

MR. STUTZCAGE: Yes, that is true.

MEMBER STETKAR: Okay.

MR. STUTZCAGE: They submitted -

MEMBER STETKAR: Yes, it's true, is good enough.

MR. STUTZCAGE: Okay.

MEMBER STETKAR: Now, the question is, you know, I think the staff did an excellent independent set of calculations, audits, questioning of this particular applicant in this particular situation.

If, perish the thought, all of the people in this room die tomorrow, will the next set of staff reviewers do the same review of the next applicant who may use the wrong information? Because only this applicant has that footnote in only their FSAR.

Also, did you notify GEH of the fact that the certified design has a -

MR. STUTZCAGE: We have not.

MEMBER STETKAR: For the record, it's a factor of a million. This is not a factor of ten percent. It's a factor of a million wrong.

So, this is not inconsequential.

MR. ROACH: This is Ed Roach. I'm the Branch Chief of the Health Physics Branch.

When this was identified, we contacted the branch responsible for the ABWR and identified to those renewal applicants coming in that these are issues with those, these units are wrong, these are

incorrect and they need to be corrected -

MEMBER STETKAR: Okay. So, that at least -

MR. ROACH: -- in both the GEH and Toshiba renewal applications.

MEMBER STETKAR: Okay.

CHAIRMAN ABDEL-KHALIK: But I still don't understand the logic of just adding a footnote rather than correcting the table.

MEMBER STETKAR: Because it costs a lot of money to get lawyers involved to change a rule.

CHAIRMAN ABDEL-KHALIK: Let's just see what the applicant says.

MR. HEAD: Let me, I guess, clarify or hope to clarify a couple of things.

With respect to the COL item, we did not use that table. The table did not have enough information for us in it to actually do the calculations. And so, we had to create another set of information to actually - to close that COL item.

So, we did not use the table with a million - a factor of a million off in our calculations. That's not -

MEMBER RYAN: It sounds like your independent calculations helped you discover the error in the tables; is that right?

MR. HEAD: I believe the NRC actually noted it first.

MEMBER RYAN: Okay.

CHAIRMAN ABDEL-KHALIK: So, what is it that you incorporated by reference?

MR. HEAD: The table.

MEMBER ARMIJO: If you don't use it, why do you need to -

MR. HEAD: Because it was used as part of the certified design process. And so, it is there and it was used as part of the process.

The difficulty that you're wrestling with that we're wrestling with is that to correct the table, you have to ask which fuel would we use to correct the table with.

And we don't have the fuel that would be - that was used to generate the table. And the fuel we are going to use will exist in the future.

So, we're left with between what we believe is really an appropriate way to identify this issue for the future, and allow us to at the appropriate time post-COL, to address that table as necessary.

MEMBER RYAN: So, how is that future activity immortalized at this point? I mean, is there

an action item? Is there -

MR. HEAD: Well, the footnote is quite explicit in what it allows us to do or not do. And so -

MR. EUDY: In our SER for that section, the staff as an additional measure to make sure those tables aren't used, would have some type of license condition that they cannot use the table. If they do, they need to submit a license amendment.

CONSULTANT WALLIS: But where is the record that says there's an error factor of a million? There must be some piece of paper or something which states very clearly, and I don't see why you need a calculation to detect an error of a factor of a million.

MEMBER RYAN: Well, the important part is, I mean, I guess I'm struggling with how - and I'm sure you thought it through and it's just not coming across.

But if I was a new applicant, I'd want a bright red light on something that I shouldn't use because it's off by a factor of a million.

And I'm just trying to figure out, I think we all are, where is that bright red light that tells me stop, rethink what this table is all about and what

you're going to do about this error.

MR. EUDY: We struggled with it for a long time trying to figure out how to deal with it and -

MEMBER RYAN: So, what's the answer? Do you have that red light somewhere?

MR. ROACH: When we dealt with - this is Ed Roach, Health Physics Branch.

When we consulted with OGC, this goes to a finality issue on the ABWR design that we have to pursue backfit.

And so as part of that, we're attacking the renewal and then pursuing backfit on this.

MEMBER STETKAR: So, OGC would prefer to because it's finality, to accept numbers that we know as wrong. Okay.

MR. ROACH: And basically is it a - why Chapter 12 is here now is because it's taken a long time to attempt to resolve this.

This license condition, these footnotes was precluding the applicant from using those calculations or those numbers in any calculations further. They're the basis.

And we feel that we verified that the design used the appropriate numbers and that, however, these tables are incorrect. And the applicant

provided revised tables to us to use for those calculations.

So, that was deemed acceptable based on the fact that we have to fix it in the actual ABWR.

MEMBER RYAN: I guess I think we're all struggling with the same question. Because if other people use the same design, they're going to have to go through the same set of hoops.

MR. ROACH: That is correct.

MEMBER RYAN: So, why not fix the hoop?

(Laughter.)

MEMBER RYAN: That's what I'm saying.

MR. WUNDER: The bottom line is this looks like a bit of a work-around for the case at South Texas. It is.

The staff is aware, as are the applicants for renewal, that there is a problem in this area. And we're pursing that issue separately.

CONSULTANT WALLIS: So, just as a member of the public, the NRC is incapable, they're simply saying in one day that there's an error of a factor of a million, and that puts an end to it?

I can't understand why it's left in some kind of limbo that you can't resolve.

MEMBER ARMIJO: Who would object to fixing

that error?

MR. WUNDER: Okay. It's off by a factor of a million.

CONSULTANT WALLIS: And is there a record which states that somewhere, sends out a note to people that there is this thing, don't use it because there's an error factor of a million?

MR. WUNDER: Yes, I said that we're pursuing that separately.

CONSULTANT WALLIS: You're pursuing it.

MR. ROACH: Including a potential Part 21, we're evaluating that within the -

CONSULTANT WALLIS: Well, I don't know that I would -

MEMBER ARMIJO: Okay. It seems like we're beating this horse to death. It's just hard to understand the logic.

CHAIRMAN ABDEL-KHALIK: Well, I think we just need to understand this logic of the finality of the design because that's the underlying basis, I suspect, for taking this sort of work-around approach.

But why is it done this way rather than simply issuing a Part 21 that would clearly point out the error?

MR. HEAD: Well, I think with respect to

Part 21, we've already assessed that. It's not a factor of a million error. It is a unit's error.

And we believe the units - the right units were used in designing the ABWR. We have firm evidence of that, that the right units were used.

The concrete, the structure, the shielding, everything is based on something that is the right values.

And so, there is no safety significance with respect to this. So, Part 21 is not really something that you would find -

MEMBER ARMIJO: So, you view it as essentially a typo?

MR. HEAD: Yes, sir.

MEMBER ARMIJO: Okay. The question is why is it so difficult to fix a typo?

MR. HEAD: Well, it's not except that -

MEMBER ARMIJO: That's really the whole point.

MR. HEAD: -- to fix it for us to put the right, correct values in, we would be having to use fuel that does not exist in the current, you know, reference to ABWR.

CHAIRMAN ABDEL-KHALIK: I think early on in this process it was pointed out by ACRS that there is

a potential for errors to come about as a result of using mixed units in the documents. That came about a long time ago.

And the question then is, what assurance do you have that there aren't similar unit's error in other places in the document?

MEMBER STETKAR: But this is different. It's not mixed units. It's just somebody said "milli" versus "micro" or something, or "picos" versus, you know.

So, it's scaling within a consistent set of plants, but - so, it's not mixed English versus, you know, international units. It's simply scaling.

MR. EUDY: In the DCD, the DCD states it's kind of optional to use the table to come up with some of these values. It wasn't very clear that it has to be used as well. So, that helps.

MEMBER STETKAR: But for -

MR. EUDY: So, the table can be used to calculate spent fuel.

MEMBER STETKAR: STP is the R-COLA for the ABWR design. The next applicant, should there be one for this incarnation of the design, would need to perform similar calculations, right?

They can't just necessarily reference

South Texas because there is an issue of what fuel will be used and things like that.

If they simply use those numbers without forewarning, it's incumbent then upon the staff to catch it the next time.

MR. EUDY: We have the renewal in and I think that staff is pursing getting the applicant to fix it.

MEMBER STETKAR: And you feel that the renewal, the timing of the renewals will obviate this concern about the next applicant?

MR. EUDY: Yes, sir.

MEMBER STETKAR: Okay.

MR. EUDY: It's the best that we can --

CHAIRMAN ABDEL-KHALIK: Which renewal are you talking about? The GEH renewal or -

MR. WUNDER: I don't think that we're prepared at this meeting to discuss the details of any of the renewals that are on the table.

We are aware that there is a problem in this table in the DCD. For the purpose of the South Texas application, we have come up with a work-around that we have run by our technical staff.

We believe it is a technically sound approach, and we believe that it is appropriate to

pursue this issue outside the scope of - pursue the issue generically outside the scope of the South Texas review.

MR. HEAD: And, John, I would add than an S-COLA would run into our footnote that is there. If they were to reference R-COLA, they would run -

MEMBER STETKAR: That's true.

MR. HEAD: And -

MEMBER STETKAR: But it is just a footnote.

MR. HEAD: Well, footnotes have to be followed also. They're part of the licensing basis. And an S-COLA would be also in a different situation with respect to the fuel at that point in time, because the R-COLA will have made progress on fuel.

MEMBER STETKAR: Right.

MR. HEAD: And so, we will be in a different position there also. And so, I appreciate all this discussion. Clearly, the staff and us have worked, you know, for a very long period of time to get through this topic.

And I appreciate what George just said about it, but I believe, you know, we have resolved it for now and protected the future.

CHAIRMAN ABDEL-KHALIK: Thank you. Let's proceed.

MR. STUTZCAGE: All right. That is all I have. The remainder is on gaseous and liquid effluent dose, and that will bring up Steve Williams.

CHAIRMAN ABDEL-KHALIK: Thank you.

MR. WILLIAMS: Hello. My name is Steve Williams. I'm a Technical Reviewer in the Health Physics Branch of the New Reactor Organization, and I want to continue our NRC presentation.

The next item is the effluent source term evaluation. The staff evaluation of the annual liquid and gas effluent source terms determined the following: The applicant used the certified ABWR DCD/FSAR effluent source term tables for their evaluations.

These source terms were based on information from the original vendor, and the basis was not retrievable from the original vendor.

Also, the NRC and the applicant separately calculated GALE computer code effluent source terms from plant data in the FSAR and DCD, and these source terms were found to be in complete agreement between the applicant and the NRC.

The NRC used the verified GALE code effluent source terms to perform compliance reviews concerning 10 CFR 20 and 10 CFR 50 Appendix I

requirements.

All applicant and NRC source terms for gas and liquid effluents meet the 10 CFR 20 unity calculation requirement.

The next item is the effluent dose compliance evaluation that we did. Compliance reviews for effluent doses were performed with existing applicant source terms and the NRC GALE code-generated effluent source terms.

Independent calculations by the staff verified the applicant effluent doses for 10 CFR 50 Appendix I compliance.

Staff-calculated effluent doses using NRC methodology were also shown to be in compliance with the design objectives of 10 CFR 50 Appendix I.

My last item is the radiation dose limits evaluation. The applicant provided information in responses to RAIs to show compliance with 10 CFR 20.1301(e) and 40 CFR 190, which is the EPA environmental radiation standards dose limitations for all nuclear fuel cycle facilities at a site.

And that's basically what we did for the effluent evaluation.

CHAIRMAN ABDEL-KHALIK: Okay.

MR. EUDY: Okay. In summary, all requests

for additional information have been addressed by the applicant. With the exception of confirmatory items, all open items have been resolved.

All COL information items and required information defined by the ABWR DCD have been adequately addressed by the applicant.

And the staff concludes the applicant is in compliance with NRC regulations, requirements and guidance with respect to radiation protection.

And we'll entertain any questions.

CHAIRMAN ABDEL-KHALIK: Are there any questions for the staff on Chapter 12?

MEMBER STETKAR: I have just a general question. This came up because someone asked me about this, and I didn't have a good answer.

In the introduction to Chapter 12 for the SER, it says this chapter provides information on the radiation protection methods, estimated occupational radiation exposures to operation construction personnel during normal operations, and anticipated operational occurrences, AOOs. In particular, AOOs may include refueling, purging, fuel handling and storage, radioactive material handling, processing, use, storage and disposal, maintenance, routine surveillance, in-service inspection and calibration.

That's a unique and different definition of the term "AOO" compared to the way that term is used throughout the rest of the Agency throughout the rest of the licensing process.

And it came up because someone asked me, well, does Chapter 12 cover radiation monitoring and protection during accident conditions?

And it does to some extent. It addresses parts of the question I raised earlier about the availability of monitoring equipment during accidents, but the chapter is replete with a reference to AOO.

And now I don't know whether AOO in Chapter 12 means this AOO, which to me is just routine operations, or whether it means AOOs as they're defined in Chapter 15, which is a clear definition of the way the rest of the Agency treats things called AOOs, anticipated operational occurrences.

So, I was just curious is that intentional? Is it an oversight? Is it a condition from before you joined the Agency since -

MR. STUTZCAGE: I don't -

MEMBER STETKAR: -- you've been here for 20 months?

MR. STUTZCAGE: I don't have an answer.

MR. ROACH: This is Ed Roach, the Health

Physics Branch Chief of New Reactors, and we will take that for action.

I believe that is the way previous versions of our Chapter 12 had been written, including the ESBWR.

And so, it's probably a previous -- and it might even be defined that way within SRP 12 without getting to -

MEMBER STETKAR: I didn't go back to the SRP.

MR. ROACH: So, I'll take the action to review that, evaluate it against the Chapter 15 references and then work to reconcile it.

MEMBER STETKAR: Regardless of wordsmithing things here, is the intent of the review of Chapter 12 to think about anticipated operational occurrences and accidents and provide assurance that the monitoring, you know, the inventory and monitoring, the placement of monitoring, the programs that are in place are sufficient to cover those types of evolutions in addition to normal operation?

MR. ROACH: This is Ed Roach.

And, yes, in some cases Chapter 12, 12.3-12.4 at least of the design to the DCDs, provide the vital area pathways, accident dose exposure rates and

hazards associated with those and our evaluation of that.

Also within those two chapters, 12.3-12.4, is the reference to the various exposures in normal operating, refueling, in-service inspections as discussed here.

So, it does cover some aspects of accident health physics, as well as instrumentation which is typically listed in 12.5.

12.5 in this case, the applicant is committed to NEI Template 07-03A which requires the applicant to have sufficient instrumentation to do all those instrumentation tests for routine surveys, evaluation, and have accident analysis to be capable of seeing - I believe it's three times ten to the seventh microcuries per cc of iodine dose-equivalent in an accident situation.

So, that NEI Template lists the various operational and accident monitors necessary that the applicant should have the appropriate number. And that's to be determined, because each of these designs is different.

And in my previous experience as the Radiation Protection Manager and as an Emergency Preparedness Director, led me to have separate

inventories set aside for emergencies that were inventoried on at least a quarterly basis to verify the instruments were available. And there were backup facilities where those instruments were kept along with dosimetry, air-sampling capabilities.

So, there's a mix sometimes with the health physics and emergency preparedness, but ultimately the emergency preparedness as evaluated under Chapter 13.3 is where we feed into with instrumentation.

MEMBER STETKAR: Thanks, Ed. At least as far as the review, there is a continuum. And there is a handoff. There isn't a gap.

This is simply probably an historical unfortunate reference to a phrase that perhaps might be corrected going forward.

As I said, it was someone asked me about this and I didn't have a good answer.

CHAIRMAN ABDEL-KHALIK: We appreciate the fact that you'll follow up on this. Thank you very much.

MR. ROACH: Yes.

CHAIRMAN ABDEL-KHALIK: At this time, we will move to the next item on the agenda which is Action Item 30 related to D-RAP.

MR. EUDY: Just to clarify, we were listed as a presenter, but NRO staff does not have any formal presentation at this moment for D-RAP, but will be available.

We have our technical reviewer here, Todd Hilsmeier, but we didn't have a formal presentation.

CHAIRMAN ABDEL-KHALIK: Thank you.

MR. HEAD: Okay. This presentation is going to concern ACRS Action Item Number 30 which concerns the D-RAP Program.

Myself, Coley, again, and Evans Heacock who has briefed you on this topic before, also with us today are Tom Daley, Ricky Summitt and Caroline Schlaseman who have assisted in the D-RAP process and will assist us today if necessary.

MR. HEACOCK: Okay. My name is Evans Heacock. I'm with STP Units 3 and 4, NINA.

Again like Scott Head stated, we are continuing on with discussion on our D-RAP list and specifically address when the D-RAP list will be effectively populated and staff review is complete.

We just handed out basically the list that the D-RAP process folks have gone through which is in front of you. It's basically a spreadsheet populated to say what items are going to be in, what are not in

D-RAP.

We actually brought back our past presentations. We have provided a list of the update of Table 19K-4 back in October meeting with ACRS.

We did a follow-up discussion on the 4/21 meeting of this year where we provided some examples. And since that time, the expert panelists continue to meet to finish our deliberations on the D-RAP process.

Three and Four, we are committed to the D-RAP expert panel system reviews. Again, the commitment was to have a completed list by the third quarter of this year. We basically have finished the deliberations ahead of that schedule to be able to present this to ACRS.

The summary of the information is from the D-RAP review systems. We looked at 188 systems and structures that are on the list in front of you that were handed out just a little bit ago.

33 systems were included automatically by the PRA process. 37 of these systems were included by the deterministic method. So, we have a total of -

CONSULTANT WALLIS: Deterministic risk ranking?

MR. HEACOCK: Pardon, Graham?

CONSULTANT WALLIS: I thought risk was

always probabilistic, and deterministic was not.

MR. HEACOCK: Right.

CONSULTANT WALLIS: It seems like an anachronism or something or whatever the right word is.

MR. HEACOCK: The D-RAP process is actually both probabilistic and deterministic. The idea of being is to close the gap. It should - the PRA analysis will give you a certain amount of inputs, and then the deterministic process will complete the list. And so, we've used both to come up with the population systems and structures and components for D-RAP.

CONSULTANT WALLIS: Sounds like an oxymoron to me. Maybe -- I know you do it, but it does sound like an oxymoron because risk is always probabilistic.

MR. HEACOCK: Yes, and again it's both. It's deterministic and probabilistic for D-RAP.

CONSULTANT WALLIS: So, it's a kind of judgmental thing.

MR. HEACOCK: Yes, the deterministic part is a judgment.

CONSULTANT WALLIS: So, it's -

MR. HEACOCK: There's a set of questions actually -

CONSULTANT WALLIS: -- a different meaning

of risk from the PRA meaning of risk.

MEMBER STETKAR: Well, it's more if you think of the process that they go through where the expert panel is more like chemical plants do in what they call HazOp analysis.

It's a structured ranking process.

MR. HEACOCK: And some of these may have been since we have presented this in the past, may not have gotten the full flavor of the process.

And we'll go through a few examples in a little bit to kind of show that to you.

CONSULTANT WALLIS: Okay.

MR. HEACOCK: Okay. And as an example, this is - last time we showed a couple examples that ranked in. This is another example that we've put into the D-RAP. This is a high-pressure nitrogen gas supply system.

The expert panel weighted this as a total score of 88. That's really high. And this is where we get into the judgments. These are the questions we use for the deterministic process.

We have five questions. Each question is weighted. And if you've noticed under the weighting factor in the center column -

CONSULTANT WALLIS: I mean, the first

question, it may be used, but it may be so secure and so well designed there's absolutely no risk associated with it.

MR. HEACOCK: This -

CONSULTANT WALLIS: Or it has a function to mitigate.

MR. HEACOCK: Yes, but these are deterministic responses.

CONSULTANT WALLIS: Okay.

MR. HEACOCK: Okay.

CONSULTANT WALLIS: I understand you have a process and you know what you're doing, but it seems as very strange the way of evaluating risk, okay.

MR. HEACOCK: Okay. So, going through the process, the very first question would be answered as the assigned value of five. We felt like this had a very high function for mitigating actions during an accident. It is defined in our EOPs.

And does the loss of function directly fail another system? We said yes.

And then the safety function significant for safe shutdown or mode changes, we again said it had a weight.

And the loss of itself cause an initiating event? We said yes.

So, basically after the deliberations go through, we gave a pretty high assignment of values to each one of those with again a total score of 88.

MEMBER ARMIJO: Would this particular system, was that identified in the PRA as -

MR. HEACOCK: No, it would not have been a PRA item. If we gave a deterministic risk ranking, that meant it was not in the PRA.

Anything in the PRA itself automatically goes in if it had a Fussell-Vesely greater than 0.005 or a risk achievement worth 2 or greater. And if you look at your table P54, it should say no from the PRA standpoint.

Okay. Any questions?

(No response.)

MR. HEACOCK: Let's go to the next slide.

Kind of interesting. We wanted to show you inclusions. This is - the next one is alternate feedwater injection system.

This is a system that is being built basically for STP 3 and 4. We added it to it. So, we ended up - we had it in our licensing basis. We have added it to our COLA. And so, therefore, we went ahead and ranked this system also. This was not in the PRA at this time since it is a new system.

As you can see, the total weight score is 40, which would not have put it into D-RAP itself, but the very first question and the second question both throw you into a question ranking of greater - 15 or greater.

So, the first one is 25, and the second one was 15. So, either one of those two questions by themselves would put this into the D-RAP process.

CHAIRMAN ABDEL-KHALIK: Now, just out of curiosity, this expert panel evaluation was done before or after Fukushima?

MR. HEACOCK: This was done after. This particular one was actually done after.

MR. HEAD: But we knew the answer before.

MR. HEACOCK: Yes. The system was put in of course before Fukushima.

CHAIRMAN ABDEL-KHALIK: Yes, I understand. I mean, it's part of the aircraft impact.

MR. HEACOCK: Yes. And because of aircraft impact by itself, that would put us in.

We have gone back in our deliberations and have reminded the panel as one of our discussions, was in light of what we've seen with Fukushima, to keep items that we think might be relevant to Fukushima in mind under the D-RAP process.

MEMBER ARMIJO: Has that resulted in any changes in this list?

MR. HEACOCK: Well, for the most part the list - we went back over the list and we have only partially gone through the list. So, I can't say that it really added anything.

I can't - off the top of my head, I don't remember.

MEMBER ARMIJO: You already knew something.

MR. HEACOCK: Yes.

MEMBER ARMIJO: It was already in your minds when you were populating this list.

MR. HEACOCK: Yes, and we continued on after Fukushima. So, there was some influence. I would say, yes, there was some influence based on Fukushima on the list.

CHAIRMAN ABDEL-KHALIK: So, is there sort of a plan to recycle through the list?

MR. HEACOCK: The list is always recycled. Again, this is a living list. It will never, ever not be - as insights change from PRA and as insights change from design and as insights change from events in the industry, it's always reevaluated.

CHAIRMAN ABDEL-KHALIK: Okay.

MR. HEAD: Obviously, when we get the new

PRA in, you know, here in a couple years, the more current vintage PRA, there will be an opportunity to review that and see if maybe some of the deterministic ones actually, you know, there's another significant opportunity to go through this list when the new PRA comes out.

CONSULTANT WALLIS: How do you compare this with something which is in the PRA? I mean, 88 looks like a very high score for this example you gave here.

Does that mean that most things which are important in the PRA have bigger numbers than 88?

MR. HEACOCK: No, the PRA will have a totally separate set of numbers.

CONSULTANT WALLIS: That's what I'm trying to wrestle with. I mean, the PRA has a lot of important things in it, but it seems - just looking at the way you do this evaluation, I would think many things that are in the PRA will come up with very large numbers.

MR. HEACOCK: Well, the PRA - and I might need to have Ricky Summitt do this, but the PRA is set up on the factors of Fussell-Vesely.

CONSULTANT WALLIS: Oh, I understand that.

Just how do you compare this when you've got an 88 here and -

(Simultaneous speaking.)

CONSULTANT WALLIS: They're completely separate and the meaning is completely independent?

MR. HEACOCK: How do you put them into the D-RAP process - they're a separate process. One is totally PRA, and the other one is purely deterministic.

CONSULTANT WALLIS: And the value offers a separate perspective.

MR. HEACOCK: Yes.

MR. THOMAS: Steve Thomas, I'm the Engineering Manager for 3 and 4.

I think the value for the deterministic process is that it is different and independent from the PRA insights. That's its specified purpose.

And it does look at things differently than PRA, and in some cases comes up with different answers than PRA.

So, I think they're not really - you're looking at apples and oranges when you try to compare these.

MR. HEACOCK: Yes.

MR. HEAD: But you put apples and oranges on the list. That's the important thing. Because the PRA, for example, at 1 and 2, you know, the AFI system

not yet put in the PRA.

Even though it exists and even though it's water going to the core, its value given all the other safety systems that are there, it might not get put in the PRA.

The deterministic risk ranking process would say that just doesn't, you know, it doesn't pass the system, okay.

And so, you know, the orange, it gets in via that route. So, it's a - for someone who's been through the process many years, it's a comforting exchange of information. It's a comforting, you know, dialog to go through, but you really are looking at two separate processes. But you do have a chance to compare them both.

MEMBER ARMIJO: The off-gas system is not identified either through the deterministic or the PRA as being included.

Could you explain why that's okay?

MR. HEACOCK: Help me out with the system numbers just real quick.

MEMBER ARMIJO: N62 on Page -

MR. HEACOCK: Thank you.

MEMBER ARMIJO: Well, there's no page number. Third page.

MR. HEACOCK: Yes, that would be the normal off-gas system off of the condenser. And based on accident scenarios from normal operations, it is necessary of course for processing gas while we're in generation.

But from a shutdown, in a safety shutdown significance, it plays no part in the core safe shutdown. And that's the reason why it would not have ranked in.

Now, a standby gas treatment -

MEMBER ARMIJO: Yes, maybe that's what I was thinking of.

Where is that?

MEMBER STETKAR: E22.

MEMBER ARMIJO: Okay.

MR. HEACOCK: And that's the one that -

MEMBER ARMIJO: That helped a lot.

MR. HEACOCK: Okay.

MEMBER STETKAR: But you notice that it's not modeled in the PRA.

MR. HEACOCK: Yes.

MEMBER ARMIJO: I notice that.

MEMBER STETKAR: That shows -

MR. HEACOCK: The gap I think is kind of what your concerns have been is to make sure we

included stuff that may not have been in the PRA.

So, the deterministic process actually put the standby gas treatment in into the D-RAP process.

CHAIRMAN ABDEL-KHALIK: Now, if and when you update your PRA, like you said, two years down the road, would the results of the updated PRA trump the earlier results of the deterministic risk ranking?

MR. HEACOCK: Yes, sir.

MR. HEAD: There's no if. We have to. The PRA has to -

CHAIRMAN ABDEL-KHALIK: In other words, if a system was included based on deterministic evaluation, can you remove the system from the list based on the updated PRA?

MR. HEACOCK: Oh, no. If the PRA still does not say that it goes in - I guess that's what I'm hearing.

If the new PRA says no still, then the deterministic still holds. The deterministic would -

CHAIRMAN ABDEL-KHALIK: Okay. So, it's not that you can remove things -

MR. HEACOCK: Correct.

CHAIRMAN ABDEL-KHALIK: -- from the list in the future if you were to update the PRA and include the system within -

MR. HEACOCK: Correct.

CHAIRMAN ABDEL-KHALIK: -- the updated PRA.

MR. HEACOCK: Correct. The deterministic looks at them if they were not in PRA or if they fall below the Fussell-Vesely or the RAW.

CHAIRMAN ABDEL-KHALIK: Okay.

MR. HEAD: It would be another change to revisit the original decision, but there's nothing automatic at that point.

MR. HEACOCK: Right.

MR. HEAD: I mean, the original decision could be revisited, clearly, but I don't know why, you know, if the deterministic process put it in now, then I don't know why a PRA later even with those insights would give us a rationale to take it off.

CHAIRMAN ABDEL-KHALIK: Okay. The important thing is it's not automatic. It would have to -

MR. HEACOCK: Right, right. It's -

CHAIRMAN ABDEL-KHALIK: -- involve a reevaluation.

MR. HEACOCK: Correct.

CHAIRMAN ABDEL-KHALIK: Thank you.

MR. HEAD: I think Evans answered the

question. Appreciate it, Rick.

MR. HEACOCK: Okay. Again, just a kind of summary of what we talked about in our scores. Weighted sums for a score ranking of greater than 40 would go into the D-RAP process from a deterministic process. Anything less than 40 or equal to 40 is low or non-risk, basically.

In any one question - answer to any one question that's greater than 15, greater than equal to 15, puts it into a high category and goes into the D-RAP.

And again, this is a component that's given the same categorization as the highest categorized system function that the component supports.

CONSULTANT WALLIS: I guess one could pick on almost any item and say why are all these no's there.

There's something called breathing air system, and it's not important -

MR. HEACOCK: True.

CONSULTANT WALLIS: -- from any PRA or deterministic, but people have to breathe, presumably.

MR. HEACOCK: Yes, sir.

MR. CHAPPELL: It's an inerted containment.

And so, it's only used when the shutdown condition -

CONSULTANT WALLIS: So, that's a specific thing for the inerted containment. It's not something else.

MR. CHAPPELL: It's a specific thing for access during refueling when the containment is open, but -

CONSULTANT WALLIS: And it's never needed during an accident condition or something like that? Never?

MR. HEACOCK: No, this breathing system is not meant for accidents.

MR. CHAPPELL: For maintenance only.

MR. HEACOCK: Yes, it's maintenance.

CONSULTANT WALLIS: Okay. All right. Thank you.

MR. HEAD: Yes, you know, the last two bullets are referring to some discussion we had last time. And we went back and revisited the exemption process, which is where these came from, and discussed with the people that were involved.

And I was part of that, and we revisited that it was initially the working group that realized that we're on the verge of risk-ranking thousands of components. And that we were going to embark upon the

exemption at that point in time.

Which is interesting from the D-RAP standpoint, because the exemption was going to move stuff up and down.

And so we wanted to be very careful about the moving, you know, stuff down. And so, we carefully chose based on the questions we were asking and the scores that could come out, that answers that would make sense and a numerical scaling that would make sense and give us comfort that we weren't moving stuff down because of the, you know, special treatments were going to be removed from those components if the exemption was approved.

So, it was a multi-meeting discussion where we got reconciled with it. We then tested it on four systems that had already been through the process before and came up with, okay, the answers are consistent, they work, it's now worth going off and doing a significant amount of review, and then NRC reviewed it.

The NRC reviewed the risk-ranking process and the answers, you know. Are you getting - is stuff falling, you know, below the line that shouldn't be?

Or if it is, in those rare cases do we say, well, we don't care, which is what the working

group would do. So, this score is not consistent, which is what literally the working group would do.

We weren't able to say, okay, it's a 50 and above the line and then go we don't like that answer, move it down.

I mean, so it was always a prejudice against what would happen with respect to the exemption.

And so we've adopted it because it has, you know, it has been used many years. It has risk-ranked lots of components. And observing the working group, and this working group functioning, it was very similar to the process that, you know, the give and take, the interaction and everything is very similar.

So, we're confident that this will - that these scales and the process are appropriate for the process that we have here.

CHAIRMAN ABDEL-KHALIK: I guess the concern was that, you know, things that should be on the list end up off the list if these numbers were selected to be at a fairly high level. And if that is the bias to make sure that things are included rather than excluded, than that makes sense.

MR. HEAD: And there's a sanity check at the end of each risk ranking, you know. Because we

are using this, you know, as a tool to get through it. But at the end of the day, the working group has to go, does that make sense?

And obviously this group hasn't been in session as much as the previous groups, but that's quickly where the group gets is did that make sense?

And if not, then they're free to go ahead and make the appropriate adjustments.

CHAIRMAN ABDEL-KHALIK: Thank you. Please proceed.

MR. HEACOCK: I guess the process for using the deterministic method will be completed in accordance with Section 17.4S and verified by ITAAC at the end of - when we are complete.

The STP 3 and 4 site-specific PRA model will be developed by initial fuel load as required by 10 CFR 50.71(h), and will be continued to be refined over the life of the plant. This again is a living document. So, it continues going forward.

PRA model changes will be evaluated for impact against the D-RAP. Every time a new model comes out, we have to go take it back to the D-RAP expert panel and see what the effects are, which goes along with the periodic adjustments to risk rankings, which will be updated as required after each plant,

like it is stated.

Any other questions?

MEMBER ARMIJO: Yes, just one more.

I'm just trying to understand why you have the reactor service water system. The PRA treated it, it was modeled, concluded it wasn't - didn't need to include it in your D-RAP list on the basis of the PRA, but you did include it with your deterministic process.

And I'm curious why the PRA numbers didn't recognize its importance.

MR. HEACOCK: For the Fussell-Vesely and -

MEMBER ARMIJO: Yes, right.

MR. HEACOCK: I probably need Ricky to help me with this one.

MR. HEAD: I think I might know the answer.

MEMBER ARMIJO: Okay.

MR. HEAD: If you have three trains, you know, you end up with each of them not being as valuable in the risk-ranking world.

MEMBER STETKAR: I think there's probably some subtleties here that maybe Ricky can elaborate on are maybe not necessarily pertinent.

The PRA that was used as a basis for this risk ranking is not complete, nor does it necessarily

completely include all common cause failures in all systems.

It does include some common cause failures in some systems. I don't know whether it includes common cause failures in reactor service water.

MEMBER STETKAR: Part of the reason we raise this concern is there are known gaps, let's call them, in the PRA simply because the timing of the PRA evolution and when the design was certified. So, that's why originally I think we raised the concern about using only the PRA to populate the D-RAP list might not be appropriate because those - from the PRA, it is strictly a pass/fail, you know. 0.0049 is a pass. And 0.005 is a fail or acceptance in terms of Fussell-Vesely importance. And you have to be pretty careful about those numbers when you know that the PRA may have some gaps in it.

I think that may be a source of some of your questions about why no from the PRA, and yet yes from other considerations.

MR. HEACOCK: Ricky, was this one that a common cause failure issue existed?

MR. SUMMITT: It actually did. It actually did have an issue.

CHAIRMAN ABDEL-KHALIK: Identify yourself.

MR. SUMMITT: Rick Summitt, RSC.

Yes, this is one of the areas that was specifically identified as a deficiency in the original DCD and some of the follow-up activities and was actually rolled up.

We did include some of the common cause activities and - or actions in this analysis as a supplemental update to the actual DCD PRA.

And basically when we looked at the multi-train system and the impact it had on the results, it was very small.

Now, one thing as John pointed out, there is some aspects of the DCD PRA that at the time it was developed, it was state of the art, but we've improved and learned since then.

And so, some of the impacts maybe on initiating events, for example, which would increase its importance, are absent from the DCD model. And that's probably one of the reasons why you have the result that you would have.

MEMBER ARMIJO: Okay. And future updates of the PRA, will you be guided by the deterministic ranking that you did to say, hey, look, there's an issue here. The old PRA said no, deterministic says yes.

Will you do a better job of modeling in your updated PRA?

MR. HEAD: Let me answer first, but then -

(Laughter.)

MR. HEAD: I believe the PRA contract we have, you know, they're going to build a PRA that's state of the art based on the current, you know, expectations.

And I don't know that we're going to use our D-RAP list to say we're expecting all of those to be in the PRA.

MEMBER ARMIJO: Oh, no. I don't want you to force it. But just to go back and say, hey, look at what, you know, take a closer look at a system that was past and -

MR. HEAD: That's certainly something that we could, you know.

MEMBER ARMIJO: Yes. And there's nothing wrong with saying, yes, you have a PRA, but I still want to put suspenders on this system and include it.

MR. HEAD: Oh, absolutely.

As I mentioned last meeting, you know, the safety relief valves, you know, there's lots of them. And so they don't - the PRA doesn't give them much credit, you know.

In our working group, the operations management insisted that they be in there, and we all agreed, you know.

That was one of the beautiful things about this risk ranking. You do have some priorities in it. And normally if operations said something needed to go in, you know, there was not a whole lot of room to -

MEMBER ARMIJO: Okay.

MR. HEAD: Rick, is that close?

MEMBER STETKAR: I only had one question, Evans. And it's something I - I'm not going to look at every item on this list, but I think that you've given us, at least me, confidence, you know, the process works, you've used the process.

The only question I have remaining about the actual D-RAP list, and it's something that's been hoovering around in the background, from items that come in from the PRA, incarnations of the list that I've seen in the past have not only systems, not only components, but specific component failure modes.

For example, a motor-operated valve fails to open is in there, but not necessarily motor-operated valve fails to close or open spuriously or closes for the same component.

Do you plan - and I don't know the

implications of the D-RAP list. I do in terms of the maintenance rule and things like that.

Do you still plan at the COL stage, to try to fine tune that list down to component failure modes.

MR. HEACOCK: At the COL stage?

MEMBER STETKAR: At the COL stage, yes.

I mean, the list that you presented to us this morning is at the systems level.

MR. HEACOCK: Yes.

MEMBER STETKAR: Which, you know, doesn't even go down to the individual component level.

MR. HEACOCK: Right.

MEMBER STETKAR: I had a question earlier about once you get down to those failure modes, then that resolution in those PRA numbers becomes rather questionable, because what's the data that were used for that particular failure mode.

Using the PRA to identify the fact that you might want a particular motor-operated valve or even the train that contains that motor-operated valve in the D-RAP list is one thing. But fine tuning it down to, you know, something that you may use for focused maintenance on valve fails to open versus not the other failure modes is -- it's not clear at this

stage.

So, I was curious what your plans are at least at the COL stage recognizing that past the issuance of the COL, we don't get involved.

MR. HEACOCK: Well, from a PRA standpoint, I'll let Ricky talk. But I have also talked about it from a D-RAP process, because it still enters in. At the component level, the failure modes has a big play in evaluating the specific components themselves.

Actually, we did do a system - we took one system as a sample to go through it. And one of our discussions under the D-RAP for deterministic was to look at failure modes, you know. Was it fail open, fail close, as you're talking about the valves and see what the important was during that time frame and see how it affected us.

So in 1 and 2, this will go back to what Scott was saying why we did the information in 1 and 2 at the component level, we brought all those in and described those. We had working groups come through, talk about all the failure modes, how it functioned in the system, and that would come out with a ranking from the working group to go to the expert panel.

That will be followed very similarly in 3 and 4 from a deterministic standpoint. From a PRA -

MEMBER STETKAR: You know, I understand that. And I guess my concern is at two levels. One is the D-RAP list be used to, as I understand it, provide some controls over, you know, quality for procurement and things like that.

And obviously I don't think that you procure the valve fails to open separately from the valve fails to close. You buy the vales.

So, I'm not particularly concerned there. It's more in terms of the maintenance rule aspects of, you know, what type of testing and maintenance do you do on that valve to ensure that it maintains its reliability according to, you know, the D-RAP controls.

And, you know, do you only care about, for example, the valve failing to open? So, you only test it for that failure mode to assure its reliability.

That's why I'm going forward recognizing that we, ACRS, don't get involved in that part of the process because that's all post-COL.

MR. HEACOCK: Well, and again as part of those failure modes, you know, what you're talking about, the different functionalities that matter, as you talked about the failure modes and how they influence the system and its safety significance to

make sure it works, once you put those components into the D-RAP process, again like you're saying, those will carry over to maintenance rule.

At which time, they'll be evaluated for what's the proper maintenance to ensure that those things will function properly down the road, not just at the beginning and make sure they get installed with the appropriate attributes, but continuing forward.

And that all goes into our long-term process.

MEMBER STETKAR: Yes, that might pick it up.

MR. HEACOCK: It does pick it up, and that's exactly how we did it on 1 and 2. So, any of those that were significant, you know, considered significant, they were put in - they had special maintenance performed on them, they changed their maintenance functions and time intervals to be able to - appropriately for the level of safety that that component provides.

Did that answer your question?

MEMBER STETKAR: Yes, to the extent that it can be answered now.

CHAIRMAN ABDEL-KHALIK: Okay. Proceed.

MR. HEACOCK: I think we're done, right?

MR. HEAD: I think that was it. That's our presentation. I guess we'd like to suggest that this action is closed.

CHAIRMAN ABDEL-KHALIK: Are there any additional questions on this action item?

(No response.)

CHAIRMAN ABDEL-KHALIK: Are there any questions to the staff on this action item?

MEMBER STETKAR: Well, since they didn't present, Todd or George or whoever, are you going to - what do you do with it?

Now that we have one, what are you going to do with it? Do you - I mean, do you review it? I know "review" is a strong word.

Do you audit it? Do you gain a sense of comfort about what is in and what isn't?

MR. HILSMEIER: Yes, my name is Todd Hilsmeier, Office of New Reactors, SPRA group.

So, your question is what will we do with the D-RAP list?

MEMBER STETKAR: Right. Now, I know from a licensing perspective, all you need to do is check off, you know, do they have one? Yes, they do.

MR. HILSMEIER: Right.

MEMBER STETKAR: But the question is -

MR. HILSMEIER: From the regulatory side.

MEMBER STETKAR: Right.

MR. HILSMEIER: Now, from the engineering side, the nature of that D-RAP list is going to be complete, updated and maintained during the design and construction phase of the plants.

And so when we performed the audits, I performed three audits so far, and the intent of the audits were not to verify the D-RAP list since the D-RAP list won't be completed until September 2011, but rather to verify that the process for updating the D-RAP list is adequate and that the procedures exist to ensure that the D-RAP list would be updated and maintained throughout the design and construction phase.

And I can go through my audit findings if that -

MEMBER STETKAR: No, no, no, no. Let's now presume that it's October of 2011 since I don't believe this subcommittee wants to talk about this topic too many more times.

MR. HILSMEIER: Right.

MEMBER STETKAR: Subcommittee chairman can overrule that, certainly. But if it's now October 2011 and indeed the D-RAP list is available, what do

you do with it then?

MR. HILSMEIER: If the D-RAP list is available in October 2011 and we're still in the application phase, I would request to see that D-RAP list to do another audit to feel comfortable that it's complete.

Now, if it's completed after the application phase and they have a license, we will do inspections of that D-RAP list.

MEMBER STETKAR: Recognizing that it is now half-past June 2011.

MR. HILSMEIER: Right.

MEMBER STETKAR: So, the likelihood of this thing becoming available pre-license is fairly high if indeed they hit the mark of September 2011.

MR. HILSMEIER: Correct. And the milestone date is September 2011, but who knows what may come up.

MR. HEAD: This is our list and it is obviously available.

MEMBER STETKAR: It seems we're close.

MR. HILSMEIER: Right, but the next step is also identifying risk-significant components. And they did the example in high-pressure core flooder, which I was very impressed with the work on that.

They used high-pressure core flooder system to identify risk-significant components.

The reason why the DCD PRA, and you're correct, John, why it didn't identify a lot of risk-significant components in the high-pressure core flooder system was because of limitations of PRA, namely, the lack of common cause failure modeling.

The deterministic method compensated for those limitations. Because when I looked at the - this risk for high-pressure core flooder systems, after the deterministic method, the results were very inconsistent with current PRA methods - what current PRA would identify.

MEMBER STETKAR: So, Todd, if I hear what you're saying, after the list is available, you know, in nominally September of this year, you will do audits of the list to give you self assurance -

MR. HILSMEIER: Correct.

MEMBER STETKAR; -- that the population is appropriate and that things that were screened out were screened out appropriately.

MR. HILSMEIER: Correct.

MEMBER STETKAR: Not a review of the whole list, but it will be done in an audit function.

MR. HILSMEIER: Right, right.

MEMBER STETKAR: Okay. Thanks.

CHAIRMAN ABDEL-KHALIK: Are there any additional questions regarding this Item Number 30?

(No response.)

CHAIRMAN ABDEL-KHALIK: We're all in agreement that this item can be closed, okay.

MS. BANERJEE: Okay. I took notice of that.

CHAIRMAN ABDEL-KHALIK: Thank you. At this time, our schedule calls for us to take a 15-minute break. We will reconvene at 20 after.

(Whereupon, the above-entitled matter went off the record at 10:04 a.m. and resumed at 5:18 p.m.)

CHAIRMAN ABDEL-KHALIK: Gentlemen, are you ready?

MR. HEAD: Yes, we're ready.

CHAIRMAN ABDEL-KHALIK: Okay, please proceed.

MR. HEAD: Okay. We wanted to go over some ACRS action items. One of them was regarding RCIC operation that you had asked to be presented at the same time as long-term cooling. Yes sir, we certainly wanted to try to do that today.

CHAIRMAN ABDEL-KHALIK: Right.

MR. HEAD: And we're also going to want to

discuss the earlier action item from this morning on the condensate storage tank cover.

CHAIRMAN ABDEL-KHALIK: Right. Okay.

MR. HEAD: All right. So Tom Daley will be assisting us with this presentation. It's going to be the -- actually those, the manual control of RCIC, it's qualification with respect to internal components and lubricating water. An issue with the net positive suction head for RCIC observed by Mr. Stetkar. Action Item 87 is the speed sensor failure for the main turbine primary over-speed protection and then a NINA update on Action Item 42 and that's related to these reports that were done on turbine over-speed.

CHAIRMAN ABDEL-KHALIK: Correct.

MR. HEAD: And Evans Heacock unfortunately had to leave, couldn't be available, but Tom will lead the discussion.

MR. DALEY: Good afternoon. I'm Tom Daley, I'm NINA's mechanical engineering supervisor for STP 3 and 4. I'm going to take a few moments to refresh everyone's memory on some design aspects of the RCIC pump and the RCIC system to illustrate the simplicity of its operations. As you can see it's a monoblock type design with a single shaft with a one-stage turbine driving a two-stage pump that's, the

turbine and the pump are both ASME, are designed and fabricated as ASME components. The turbine and the pump share a bearing system that is water-lubricated and we'll talk a little bit more about that system in this presentation. You can see here the steam inlet is on the left side of the pump and the water discharge is on the right side and it has a venturi there and that venturi actuates a mechanical linkage to the governor. So it's a direct type linkage that we'll talk a little bit about in the discussion here as well.

MEMBER STETKAR: So it's a fixed-flow pump.

MR. DALEY: Sorry?

MEMBER STETKAR: It's a fixed-flow rate pump.

MR. DALEY: There are two different flow rates.

MEMBER STETKAR: Yes.

MR. DALEY: Okay. Here we've got, on the left we have a schematic of the flow control system for the turbine water-lubricated pump system. And you see the venturi actuates a governor and a spring-through mechanical linkage to the throttle valve. It's a directly actuated system so the governor's

directly actuated from the flow rate. And for comparison on the right we've got a conventional Terry turbine-type control system which is an electro-servo feedback system that functions but it has a delay aspect to it.

These are the typical startup transients for the two different type pumps, the turbine water-lubricated pump on the left as a smooth startup, the characteristics curve of the startup for the typical Terry turbine pump has a quick response followed by a feedback system that sometimes overcompensated and so they went with a bypass system that operated a small bypass line around the main governor valve and that's how you arrive at the second characteristic curve.

This is a schematic of the RCIC system itself. As you know it's driven by steam from the main steam line. The turbine is driven by that and the turbine exhausts directly to the suppression pool. The water supply is the preferred source, is from the condensate storage tank and once that source is depleted it automatically switches to the suppression pool. All these valves are DC-powered valves and are capable of being actuated either from the main control room, well automatically of course or manually from the main control room or from the remote shutdown

panel or from the MCCs or they can be actuated manually.

MEMBER ARMIJO: What is the steam pressure to operate that turbine? What, 1,000 psi?

MR. DALEY: You need about 125 pounds. And that's a good question because in one of our discussions we're going to talk about how quickly that, the pressure depressurizes to the point of where a RCIC no longer can perform its mission.

So really the first action item we're specifically discussing this afternoon is manual operation of the RCIC system under various scenarios including station blackout. And as I mentioned, the RCIC system can be operated manually from the main control room or it can be operated remotely either from the control MCCs that power the valves or from the valve operators themselves. Loads will be stripped by procedure from the batteries and it has -- the main battery that supplies it has an 8-hour lifetime. And loads can be stripped to extend that period to a longer period. And as the slide said, procedural guidance will be developed regarding these RCIC system operations under all these conditions.

MEMBER STETKAR: Tom, when you say it can be operated, you mean it can be started? When I think

of operated, can you control the flow from RCIC?

MR. DALEY: No. It's closed. It's just --

MEMBER STETKAR: It's on or it's off.

MR. DALEY: You've got that that, what they call the kick-down valve is a solenoid-operated, DC solenoid-operated valve.

MEMBER STETKAR: But you can't -- you could, and I don't know how that valve works, but you might be able to toggle it between its high-flow regime and its low-flow regime, but you can't --

MR. DALEY: You can't control it --

MEMBER STETKAR: After it gets into low flow, once you get out in time, it's basically a start/stop on vessel level.

MR. DALEY: That's correct.

MEMBER STETKAR: Okay.

MR. DALEY: Next section talked about --

CHAIRMAN ABDEL-KHALIK: What's manual control mean?

MR. DALEY: I'm sorry?

CHAIRMAN ABDEL-KHALIK: So what does manual control of RCIC mean? It's just on/off?

MR. DALEY: On/off. You open the valve and then the RCIC manual governor which by the way

needs no power. The governor system is powerless.

MEMBER STETKAR: It's a fixed-flow rate and it's internally controlled so you don't need to -- it doesn't have a complex flow controller or turbine governor or anything.

MR. DALEY: You open up the steam supply valve and you open up the water injection valve and --

MEMBER STETKAR: It will either give you Flow A or it will give you Flow B.

CHAIRMAN ABDEL-KHALIK: Regardless of what the steam pressure is.

MR. DALEY: That's correct. Because it senses flow and if the steam pressure goes down the governor valve will open --

MEMBER STETKAR: As long as there's enough driving head to turn the turbine.

MEMBER ARMIJO: As long as you've got steam it should get you to Flow B.

MR. DALEY: The control is on flow. So if the flow starts to decrease it's going to open the governor valve. And as the steam pressure depressurizes the pump the turbine will slow down, the pump will slow down, the flow will come down and they'll sense it and it'll open the throttle valve.

MEMBER STETKAR: Till you get the throttle

valve fully open at which point eventually flow will go to zero but it's pretty cool by then.

CHAIRMAN ABDEL-KHALIK: Okay. Thank you.

MR. DALEY: Okay.

MEMBER ARMIJO: Is there a lot of operational experience with these kinds of pumps?

MR. DALEY: There is. Unfortunately it's all on PWRs usually on an auxiliary feedwater system.

MEMBER ARMIJO: Okay.

MR. DALEY: I believe the Longmen plant is the first one where they've actually installed in the RCIC system.

MEMBER ARMIJO: But it hasn't been used in the Japanese ABWRs?

MR. DALEY: No.

MEMBER STETKAR: I think we asked that. My notes are that there are 18 of these out in operation right now at all PWRs.

MR. HEAD: In that discussion we noted that while we believe this is a more reliable, you know, we don't have enough time yet to actually start adjusting the PRA to reflect that. Maybe by the time we get finished they'll have enough that we can accommodate that, but right now we're not giving any credit for that.

MR. CHAPPELL: Another quick note on this slide is if you would, the blue arrows are offset a little bit, that might be somewhat confusing. So you can see --

(Laughter.)

MEMBER STETKAR: Thanks for making it easier to figure out --

MR. CHAPPELL: You get a little offset horizontally. So you can see the upper right arrow, if you can imagine that moved over to there then the other ones would move along the shaft. You can see the black arrows underneath.

MR. DALEY: The system that lubricates the bearings with water from the pump discharge. And you can see there is what's called a multiple plate restricter. It's a multi-plate orifice that's in the first stage of the pump. That's set in the factory to a certain flow rate and that flow rate then goes to the strainer. There's a pressure gauge and the flow then goes down to the turbine side of the pump and lubricates the bearings. Water then goes back and is put back into the suction of the pump. And there's a leak-off valve that you adjust during startup and that's where you set your lubricating water flow.

The question was how is the pump qualified

with respect to the internal components, including that strainer. Now, we talked earlier at some length about debris and debris that could be in the water that we're using as makeup to the reactor vessel. Well, if the RCIC pump is pumping that water then of course it needs to be able to function under those conditions as well. And our main response from our last discussion on this was that we are going to qualify the pump using accepted standards for the environment that it will be functioning in. So if the water that the RCIC pump is going to be pumping has a certain debris level the pump will be qualified so that we know that it can operate under those conditions. Now, let's talk about what conditions the RCIC pump will be operating under.

CONSULTANT WALLIS: The pump will operate, but the strainer.

MR. DALEY: Well, that's the point, that's the point we're --

MR. HEAD: That was the point of the question. Right.

MR. DALEY: So we felt the likelihood of the pump being damaged due to plugging of this filter by debris is minimized for a couple of different reasons. One, the preferred source for the RCIC is

the condensate storage tank. So it -- there's not people in there swimming in the storage tank so there's not a whole lot of debris that we feel will accumulate in that tank. It's sampled periodically and if it is, as necessary it needs to be cleaned up it can be. The alternate source is the suppression pool. And as we talked earlier suppression pool, we do have a suppression pool cleanup system. That system is run after outages and the water is tested periodically during operation and the system is run again as necessary.

Now, considering the sources of water for non-LOCA events where the RCIC system has the potential for operating for some length of time such that the supply could switch over to the suppression pool, we don't feel that the LOCA, the debris that we talked about being generated by the LOCA is not there. So we don't feel that the debris source during non-LOCA events exists.

In a post-LOCA environment the mission time for RCIC is short. We talked about on a large break we're going to depressurize main steam very rapidly and RCIC will run based on our estimates for three minutes before the steam pressure gets to a level that it won't drive the turbine. For a smaller

line break that time is somewhat longer but it still won't be on the suppression pool for a great length of time such that any debris that's generated from this small break which is not going to generate a lot of debris is going to be able to go -- reach the suppression pool and in turn reach the pump. So we don't really feel that this filter is going to be subjected to the type of debris that we're talking about the ECCS suction strainers are going to see.

CHAIRMAN ABDEL-KHALIK: Are there any tech specs associated with the suppression pool cleanup system?

MR. DALEY: The cleanup system?

CHAIRMAN ABDEL-KHALIK: Right.

MR. DALEY: I would doubt it.

CHAIRMAN ABDEL-KHALIK: Are there any -- pardon me?

MR. CHAPPELL: Just the level --

CHAIRMAN ABDEL-KHALIK: Just the level of water in the suppression pool and temperature. So how do we know that this suppression pool cleanup system is maintaining the water quality?

MR. CHAPPELL: There are DCD requirements and there are EPRI guides that we -- industry guides that would -- Milton can expand on that.

MR. REJCEK: Milton Rejcek, Units 3 and 4, NINA. Yes, BWR water chemistry guidelines have -- and we're committed to following those -- will require us to keep that suppression pool clean. And with stainless steel liner and the fact that it's inerted and you don't go in there routinely, if you look at the model of the ABWR it's fairly easy to keep it clean.

MEMBER ARMIJO: Yes. It's not a Mark 1.

MR. HEAD: Let me just say this -- what this represents is a preview, we think, of that assessment that we have to do, that we've committed to do. This is, you know, to demonstrate the functionality of the pump. So this is actually our thinking of what that assessment would look like.

MR. DALEY: Right. We will have to put this all on paper to show that this is what we need to qualify the pump to.

MEMBER ARMIJO: How delicate is this pump in the event that you did get debris coming through your strainer? Not plugging, but just you get some debris coming through. Do you know would it burn up the bearings really quick or?

MEMBER STETKAR: It's not the debris through the strainer, it's the fact that if you plug

the strainer you have no cooling for your bearings.

MEMBER ARMIJO: I understand that but let's assume that instead of putting such a fine filter in the strainer you've opened it up. Will this burn out the pump from debris getting? I mean how --

MEMBER STETKAR: That's --

MEMBER ARMIJO: -- that you have a strainer?

MEMBER STETKAR: That's a good question. If they say they have no debris then why do you have a strainer.

MEMBER ARMIJO: Yes. That's what I'm trying to get at.

MR. DALEY: I think that their, in their design of this pump I don't think they pictured that it was going to be operating in this one particular environment and that's the only possible operation it would ever see. So I don't think aux feedwater systems, let's see, that all comes off of the refueling water storage tank so it --

MEMBER ARMIJO: I mean, it's nice to have a strainer, I'm not against that, but if -- in a situation like this, wouldn't you rather be sure that you could get cooling water in there and understand how long your bearings would last even if it was a

little bit dirty?

MR. DALEY: Yes, I couldn't comment on how long the pump would run if it would add the debris. A little bit smaller than the filter getting through it. I would imagine it would run because otherwise they'd put a smaller filter.

CONSULTANT WALLIS: They only need it for three minutes.

MR. DALEY: That's right. I mean, it doesn't have to run a long --

CONSULTANT WALLIS: To cool the bearings.

MR. DALEY: In the station blackout mode where you probably would want to run it for longer and would be able to run it for a longer period of time we don't see the debris as being generated in that scenario. So.

CHAIRMAN ABDEL-KHALIK: What's the filter size? Is it 10 microns?

MR. DALEY: Thirty-eight microns.

CHAIRMAN ABDEL-KHALIK: Thirty-eight microns.

MR. DALEY: It has a handle. It's one of the old type of filters and the maintenance instructions tell you once a month go down and rotate this handle one revolution, check the differential

pressure on the filter. So it does have maintenance involved with it.

CONSULTANT WALLIS: Well you say that this three minutes looks like a very short time.

MR. DALEY: Yes.

CONSULTANT WALLIS: Did you calculate how much debris could get there in three minutes?

MR. DALEY: No.

CONSULTANT WALLIS: Did you just think it's such a short time that nothing significant will get there?

MR. DALEY: RCIC just -- in our previous discussions we assumed all this debris automatically gets into the suppression pool and gets right over to the strainer. Well, that's not going to happen.

CONSULTANT WALLIS: I know.

MR. DALEY: It's going to take awhile to get from wherever it's being generated into the suppression pool --

CONSULTANT WALLIS: How long is that while? How long is that while compared with seven minutes or whatever?

MR. HEAD: Compared to how long it would last if it was plugged and no, we have not -- we've not done that. As I said, we're previewing what we

think would be the outcome of --

CONSULTANT WALLIS: But this --

MEMBER STETKAR: The concern -- I like these bullets here. The concern would be something on the small end of the small LOCA range where you might want to run RCIC for quite awhile. But then the question is how much debris would get generated.

MEMBER ARMIJO: And the nature of the debris.

MEMBER STETKAR: The nature of the debris.

MR. DALEY: That's why this is only a preview because that sort of thinking is going to have to take place.

MEMBER STETKAR: That's -- of this thinking I would focus on kind of the bottom end of the last bullet on here because a core flooder line break is still a reasonably decent-sized break. It's going to depressurize you know relatively fast there even though it's called a small break.

CHAIRMAN ABDEL-KHALIK: Is the response to this action item essentially that you will test it according to ASME standard QME-1-2007?

MEMBER STETKAR: It's just a question of what conditions do they need to specify to satisfy that, the water quality.

CHAIRMAN ABDEL-KHALIK: Right. Okay.

MR. HEAD: Have we addressed your?

MEMBER STETKAR: Yes, yes. You know, that's however you define that water quality, but yes, that's a good argument.

MR. DALEY: The last action item involving RCIC has to do with a net positive suction head for the RCIC pump at it should say 77 degrees vice 100 degrees. It was pointed out at the last meeting that the conditions we had, we were evaluating the net positive suction head for the pump couldn't exist, it wouldn't work. And that observation was correct. In fact, we had made a -- well, we say it was, the value at 100 degrees was inappropriately applied during implementation of the standard departure. In that we looked at -- someone looked at the tables that the other NPSH values were at and they were all at 100 degrees C. And so for consistency the 100 degrees was placed on this table as well. And we didn't catch that application. So we will revise the table to return that atmospheric pressure value to 10.62 meters and the correct value for the temperature, design temperature of the suppression pool for RCIC operation.

MEMBER STETKAR: Now, several slides ago

you explained how RCIC can be operated mechanically, manually, in the event that you have no electric power. Now, in the preceding slide you explained that the only conditions where you might need long-term RCIC operation would be non-LOCA events which might be a station blackout. But now you're telling me that RCIC actually requires suppression pool cooling which requires AC power for long-term operation. Is that correct?

MR. DALEY: Well --

MEMBER STETKAR: So you can't actually operate RCIC in the long term in a station blackout.

MEMBER CORRADINI: Doesn't it depend on what you define as long-term?

MEMBER ARMIJO: More than eight hours.

MEMBER STETKAR: Well I don't know, how fast do you heat up the suppression pool to 77 degrees C in a station blackout? I don't know. I'm not -- I've always said I can't boil water, but you don't need to boil it for your.

MEMBER ARMIJO: You don't. There's a lot of water but there's a lot of heat too.

MEMBER STETKAR: I just want to make sure. The former question that I had was if, you know, if 100 degrees C is what you're trying to justify was,

you know, you need the containment accident pressure to give you the over-pressure. Now you're saying well no, 77 degrees C is what you really qualify the thing for. Which means you do need suppression pool cooling.

MR. DALEY: If you must maintain the temperature less than 77 degrees you do need, you will need suppression pool cooling.

MR. THOMAS: This is Steve Thomas. Let me point out this of course is for the design basis events described in the DCD and the FSAR. I think your question is a valid question. It goes to what is the ultimate capability of RCIC and that's a question we do not have an answer to today. That's in part of our Fukushima assessment plan is to in a real situation where you could be operating this for an extensive period of time beyond these design basis conditions what are the capabilities of the system to operate.

MEMBER STETKAR: Well, it's also trying to bring Fukushima in. It's the point that you did emphasize the fact that it can be operated mechanically even if you don't have electric power. One of the reasons of having the self-cooled water system is so you don't rely on external cooling or

external lube oil or any of that kind of stuff. All of those design features of that particular little pump by itself are good and indeed they improve availability of that pump under station blackout conditions with the exception of the fact that keeping the suction water cool enough to operate the thing long-term does indeed require some sort of external cooling water.

CHAIRMAN ABDEL-KHALIK: It's clear --

MEMBER STETKAR: I don't know what the time frame is. I don't know how long it takes to heat the water up.

CHAIRMAN ABDEL-KHALIK: Is there any way that we can get sort of an answer to that question as to a time estimate for how long it would take for the?

MEMBER STETKAR: Decay heated.

MR. CHAPPELL: It's also a question of what would be the conditions in the containment. Because once you've put that much decay heat into containment and heated the pool up to 77 C what's your pressure? What are your conditions?

MEMBER STETKAR: Well, I mean -- yes.

MR. THOMAS: Well, there's more than one question there. I mean, there's a question of in reality, you know, how far past 77 degrees is the

system capable of operating, at what point do you either lose suction or you overheat the bearings. And the other question is you know how long can you do that without supplemental cooling for the suppression pool. There's a couple of questions in there.

MEMBER STETKAR: But at least in terms of our open item it's clear that --

CHAIRMAN ABDEL-KHALIK: Yes. It's clear that this addresses the open item, but I think a follow-up would be, you know, somehow you can make a rough estimate for how long it would take to reach 77 degrees.

MR. HEAD: I think we know that, we just don't have it available to us right this second.

CHAIRMAN ABDEL-KHALIK: Okay. So maybe if you can provide that information at a later time.

MR. HEAD: Given how different that has changed can that be a new open item?

CHAIRMAN ABDEL-KHALIK: Sure. Sure. Yes, I'm sorry. Yes, we can do that. Let's close this item, just open another item for just estimating the time it would take --

MR. HEAD: To 77 degrees.

CHAIRMAN ABDEL-KHALIK: -- to reach 77 degrees.

MR. HEAD: Under station blackout.

MR. CHAPPELL: Yes. Yes. Because it doesn't make sense if you have cooling.

MEMBER ARMIJO: If your bearing cooling function was lost at less, at temperatures lower than 77 that would be the end of the.

MR. DALEY: But there shouldn't -- since there shouldn't be any debris associated with this.

MEMBER ARMIJO: The cooling water is at a higher temperature and --

MR. DALEY: I see.

MEMBER ARMIJO: Yes. Could that be a limit as opposed to the NPSH?

MR. DALEY: As part of that we'll check that as well. I don't really think --

MEMBER ARMIJO: I don't think so either but it's worth checking.

CHAIRMAN ABDEL-KHALIK: Oh, for the --

MEMBER ARMIJO: Right. All right, thank you.

MR. HEAD: So we've addressed this one and we do have, I understand, a follow-up with respect to 77 degrees in station blackout, how long it would take to get there.

MEMBER STETKAR: I have no sense how long

that might take.

MR. HEAD: No, no, we're going to try to tell you that. Okay.

MR. CHAPPELL: There's a conclusion there. We pretty much covered that.

MR. DALEY: Right. At 77 degrees we do have margin for NPSH and there is an ITAAC to verify that in the as-built RCIC system.

MS. BANERJEE: How about the first two items under RCIC, 89 and 71? Are we ready to close those two?

CHAIRMAN ABDEL-KHALIK: I'm sorry. What are we talking about? Seventy-one?

MR. CHAPPELL: And 89.

CHAIRMAN ABDEL-KHALIK: Seventy-one is closed.

MR. CHAPPELL: Right.

MS. BANERJEE: Eighty-nine?

CHAIRMAN ABDEL-KHALIK: They just discussed 71 and 70, is that correct?

MR. CHAPPELL: Eighty-nine was the first one.

MS. BANERJEE: Eighty-nine was the first one, 71 was the second one.

CHAIRMAN ABDEL-KHALIK: Right, 89 we said

was closed also, the manual control of RCIC.

MS. BANERJEE: Okay, so 89 is closed. How about the middle one, 71?

CHAIRMAN ABDEL-KHALIK: Closed, 71, closed. We said the pump qualification. I guess we -- it's an ASME test, so. That's closed.

MR. HEAD: Seventy is closed but we're opening up a new one.

CHAIRMAN ABDEL-KHALIK: Right, and 70 is closed. You okay with that John?

MEMBER STETKAR: Yes.

CHAIRMAN ABDEL-KHALIK: Okay, good.

MR. CHAPPELL: All right, if you mind shifting gears a little bit to another turbine in the plant, the main turbine. We had a follow-up question related to the design. We had gone through in some detail and described the design features for the main turbine over speed protection system and sub-systems. And a question came up because we had not described in the FSAR what happens on failure of one of the speed sensors. So there are diverse speed sensors that are provided to each of the two redundant subsystems. You have the normal speed control and the same speed sensor with separate signals provided to the normal speed control with the emergency over-speed protection

system. Then you have these diverse passive speed sensors that provide input to the primary over-speed system. The failure of the passive design sensors does not impact the normal speed control. It's completely separate signals. Therefore, since it is a degraded condition the operators would be -- provide an indication of velocity speed sensors as well as alarms in the main control room to tell them that these speed sensors had failed and they would be able to take timely action. And this timely action would ensure that there was a very low potential, that if you have more of a chance of an over-speed condition due to a degraded over-speed protection system that you could take the appropriate action. So that would --

CHAIRMAN ABDEL-KHALIK: What kind of actions would the operators take under a situation like this?

MR. CHAPPELL: The system would tell them to -- you would write a condition report and then you would evaluate and look at the fixes, determine the cause and then there would be a certain amount of time based on risk that you would be directed to take the turbine offline or remove it from the steam source. So you would do an analysis, determine the risk and

back.

CHAIRMAN ABDEL-KHALIK: So there would be a tech spec LCO associated with this?

MR. CHAPPELL: Not a tech spec, not a tech spec for this. You would have the procedural guidance so that you don't impact. You would do a 50.59-like evaluation to ensure that if you had this alarm condition that you could then take the appropriate action. One of the ways to think about this is there's a table provided in the DCD that shows what happens when you become more and more probable, when your protection against an over-speed event becomes degraded. So if it changes by orders of magnitude. This is analogous to a missile generation event, and it gives you months and days to consider these types of things. So we would look at those types of -- that's for a specific piece. You're talking about a large number of concurrent failures would have to happen as well as loss of completely redundant and independent systems so there should be adequate time to take appropriate action. Since it doesn't impact the normal speed control and it does not, it's not a common cause failure in any sense that it would eliminate all over-speed protection then rather than causing an anticipated operational occurrence or the

scram in that condition it's more appropriate and better for plant control to take manual actions, appropriate manual actions. So because this is a very detailed design aspect and an alarm among many, an indication to the control room, that level of detail is not typically in the FSAR and we think our response is complete. There will be no additions needed.

MS. BANERJEE: Are you going to revise the RAI response?

MR. CHAPPELL: No, we don't think it's necessary for this.

CHAIRMAN ABDEL-KHALIK: How long do you think you would operate with this kind of condition?

MR. CHAPPELL: Never. You would --

(Laughter.)

CHAIRMAN ABDEL-KHALIK: No, I mean how long do you think it would tolerate this kind of condition?

MR. CHAPPELL: You would have gone through many barriers. If you've lost all of these passive sensors you've got a problem with probably -- it's probably something else. So if you had lost, let's say take it in a broader scheme, if you've lost an entire over-speed protection subsystem, take it on that level, not just necessarily the speed sensor

failure. If you've lost that then you're going to have to take appropriate action. You're going to have to make corrective action. That would be a high priority. You want to protect your investment. The main turbine is the second most valuable piece of equipment in the plant. You're not going to risk that nor is your insurer going to be happy about risking that. So it will be a very high priority to fix and you may stay online long enough to determine how long it would take to fix and then you'd probably fix it at the earliest opportunity. I wouldn't extend the time as long as I could. I would fix it as soon as possible.

CHAIRMAN ABDEL-KHALIK: I don't know who raised this question. I think it was --

MR. HEAD: I was wondering if it was Charlie. And so you know, between this and the transcript, if he still feels like it's addressed then obviously we've addressed it, but if he wants some more discussion on it then.

CHAIRMAN ABDEL-KHALIK: I think we have the written response anyway, so that's fine. Thank you.

MS. BANERJEE: He had to leave.

CHAIRMAN ABDEL-KHALIK: Okay.

MR. CHAPPELL: The last one also deals with main turbine and.

MR. HEAD: This was -- this is a follow-up on the main turbine reports that we created that we noted or you noted some pretty interesting comments and inconsistencies and other aspects of it. This is just our follow-up to note that our proposal was at the time, you know, given that these reports are actually officially required sometime in the distance is that we evaluated those comments and we captured those comments. We opened a condition report. It has a number of actions. One is to capture your comments from the transcript. The other is to inform Toshiba they exist and to monitor their incorporation process. And then the last action three or four years down the road is to validate that your comments have been incorporated or addressed. And so that CR exists. It's open in our system and it's -- Toshiba is aware of them, aware of the situation. So we believe we've addressed the issue to the extent we can at this point in time.

MEMBER STETKAR: Yes, and I'm fine. You know, as a practicality I'm fine with that. I think, you know, you're aware of the questions that we raised. And with regard to 87 if I can weigh in on

that, this -- if you keep the 42, whatever it is, 16 number slide up. I kind of view what Coley described as far as you know what do you do if you have that part of the over-speed protection system down. That's folded into this whole thing. I mean, the first line on this slide says main turbine missile analysis and maintenance program will be submitted. If the main turbine missile analysis is a comprehensive missile analysis that looks at all of the contributing causes, one of those contributing causes regardless of how you get into it will be failure of one or in principle both over-speed protection systems and you know, some sort of maintenance program would have to be able to address that. So it's, you know, I think it is all folded together into what's done in that turbine missile analysis and what the recommendations in terms of inspection frequencies or you know, compensating items or whatever you do comes out of that. As you said, that's down the road a bit.

MR. HEAD: Yes.

CHAIRMAN ABDEL-KHALIK: Okay.

MR. HEAD: Okay? Actually, I appreciate the -- your indulgence to continue the review. We do have a follow-up that we can address that regards the condensate storage tank. And I believe we've handed

out some figures.

MEMBER RYAN: Yes.

MR. CHAPPELL: At least to move us along and maybe refine it if there's any further questions. But what you have are a couple of design drawings.

MS. BANERJEE: Just a question please on 42. Items like 42, Action Item 42, are going to depend on the maturity of the design also, right? So given the recent decision to go up to COL and not do anything in terms of construction is the design going to be mature enough within the time frame, within three years of COL or something like that to provide this kind of an analysis? Is the design going to be mature enough?

MR. HEAD: We believe so, but if there's some sort of time issue there, you know, we might have to change the commitment. But we ultimately still have to provide it to the NRC. NRC would have to agree to that change. I mean, you know, that would be something that we would have to I'm sure negotiate with NRC as to when that report should come in. So ACRS, whenever it does come in it will have factored in your comments.

MEMBER ARMIJO: We just won't see it.

CHAIRMAN ABDEL-KHALIK: Okay.

MR. HEAD: So go ahead, Coley, I'm sorry.

MR. CHAPPELL: All right. So you have a packet with two printouts. The first -- yours is stapled similar to mine. The first page has a top-down view and that shows a 14 meter diameter right cylinder condensate storage tank that's centered within a square container, right, a dyke. On the next page is a side view which kind of gives you more of a perspective. The dyke, the square dyke is 19 meters squared and where the condensate storage tank is 14 meters in height the dyke around it is 11 meters in height. And if you look at, if you do a rough volumetric calculation you can determine that you could pump the entire contents of the condensate storage tank into the dyke area around it, but if there was a break in it such that it flooded the dyke area it would not go above half the height of the dyke area to equalize level.

The cover on the condensate storage tank and then what I'll call is a skirt that covers the top of the surrounding dyke, that's metal. That's the information that I have available.

MEMBER ARMIJO: That's sealed in some way to the tank?

MR. CHAPPELL: It's set up next to -- I

mean, it's close enough so that there's not gross in-leakage.

MEMBER ARMIJO: It's kind of an elastomer. You're not going to weld it or anything like that.

MR. CHAPPELL: Right. I mean, it's a large area, it's subject to small pressure changes can cause a lot of --

MEMBER ARMIJO: I was going to say there's an elastomer or something that keeps --

MR. CHAPPELL: I'm not sure about that. I would just think it would just be something that would allow some give so that it's not a rupture.

CHAIRMAN ABDEL-KHALIK: Do you have something like that on Units 1 and 2? I suspect it's wide open.

MR. CHAPPELL: There's a number of --

CHAIRMAN ABDEL-KHALIK: Really?

MR. HEAD: We don't have anything like this.

MEMBER RYAN: Thanks for the example. Thank you.

MR. HEAD: And then if I could, I think we've done a pretty good job, there aren't that many open items, but earlier on today we did have a discussion regarding radiation detectors and I gave an

answer and you mentioned something about a philosophical discussion and I don't know if that's something that we wanted to have or if that was, or if later on we actually maybe answered that. Or maybe even the staff's discussion on it, whether they had.

MS. BANERJEE: The definition of AOO?

CHAIRMAN ABDEL-KHALIK: No, that's a different. You know, you said that that's a --

MR. HEAD: You didn't actually say it was a follow-up item. You just said it might be something we want to discuss some more regarding the philosophy of I think multi-unit accidents or something.

CHAIRMAN ABDEL-KHALIK: Right.

MR. HEAD: Irregardless of Fukushima.

CHAIRMAN ABDEL-KHALIK: Right. Right, right, right, right. I think we'll need to discuss that internally.

MR. HEAD: Okay. All right.

CHAIRMAN ABDEL-KHALIK: But --

MEMBER STETKAR: My sense is that whole issue is in such a state of flux these days that we need to see what the lessons learned from --

CHAIRMAN ABDEL-KHALIK: Right, and we should be able to see that fairly soon.

MEMBER STETKAR: -- what type of guidance

comes out.

MR. HEAD: Okay. And then just, you know, end of the day, you know, we have the three action items that we've gone over with respect to the long-term cooling which is the loads on the plate, the RAI information we owe you and a writeup that we'll provide regarding the 1.2 discussion. And then we have a follow-up regarding the ADS and how we describe -- how we are going to fulfill that expectation and we'll be providing that. And then an open item regarding the 77 degrees and how long it takes to get to that, and the implication with respect to station blackout.

CHAIRMAN ABDEL-KHALIK: Right.

MR. HEAD: That's all I have for today.

CHAIRMAN ABDEL-KHALIK: That's all I have on my record.

MR. HEAD: Okay.

CHAIRMAN ABDEL-KHALIK: Thank you.

MR. HEAD: Thank you.

CHAIRMAN ABDEL-KHALIK: At this time the only item left is the public comments, and rather than taking a break and coming back I'd like to do that. Is the phone bridge line open?

MS. BANERJEE: Yes, it was open.

CHAIRMAN ABDEL-KHALIK: It was open?

MS. BANERJEE: Yes.

CHAIRMAN ABDEL-KHALIK: Okay. Is there anyone on the bridge line?

MS. BANERJEE: Last time we checked there wasn't anybody.

CHAIRMAN ABDEL-KHALIK: There wasn't anyone. Okay.

MR. HEAD: I'll just, I'll note just for future purposes we had some people listening and after the LOLA discussion I know you wanted to go back but our people aren't able to hear after that. So something might have happened.

MS. BANERJEE: No, I went in and checked to make sure, he checked and there was -- he said he checked before, there was only one person other than the two. You know, us and over there.

MR. CHAPPELL: Our people were saying there was only one too. Maybe there was --

MS. BANERJEE: And then when he checked again after we opened the line he didn't find anybody.

MR. HEAD: Okay.

MS. BANERJEE: I can go and ask him again.

CHAIRMAN ABDEL-KHALIK: Well, let's in the meantime ask if there's anyone here, a member of the

public. I guess I don't see any. So we just need to make sure that the line is open at this time and if there is somebody online who would like to make a comment that they can make the comment.

MR. CHAPPELL: John, I've got a couple of references to the COPS system. If you want I can give you that after this.

MEMBER STETKAR: Yes.

CHAIRMAN ABDEL-KHALIK: There's no one? Okay, thank you. Let's just go around the table and see if there are any additional comments that people would like to make. Let me start with you, John.

MEMBER STETKAR: Nothing more except Coley said he has a couple of references to COPS drawings?

MR. CHAPPELL: Yes, in Tier 1, Figure 2.14.6, that's the section that talks about the ACS system. And then in Chapter 21, Figure 6.2-38, that's the information that I've been provided.

MEMBER STETKAR: 6.2-38?

MR. CHAPPELL: 6.2-38 is correct.

MEMBER STETKAR: Thank you. And that's in the?

MR. CHAPPELL: That's in Chapter 21. That sounds like EC --

MEMBER STETKAR: That sounds like DCD,

right?

MR. CHAPPELL: No.

MEMBER STETKAR: That's your FSAR? I'll find it, I have both.

MR. CHAPPELL: I would look in the COLA first. If it's there in the COLA that's the right figure.

MEMBER STETKAR: Okay, okay, thanks.

MR. CHAPPELL: If not, then the DCD.

CHAIRMAN ABDEL-KHALIK: Any follow-up questions?

MEMBER STETKAR: No, sir.

CONSULTANT WALLIS: No more questions. I will send you a report and I'm planning to do it tomorrow.

CHAIRMAN ABDEL-KHALIK: Okay, thank you. Sam?

MEMBER ARMIJO: No questions.

CHAIRMAN ABDEL-KHALIK: Mike?

MEMBER RYAN: No questions.

CHAIRMAN ABDEL-KHALIK: Okay. Well, thank you very much.

MR. HEAD: Thank you.

CHAIRMAN ABDEL-KHALIK: On behalf of the subcommittee I'd like to thank both the applicant and

the staff for a very informative presentation. And sorry it took so long.

MR. HEAD: No, thank you very much.

CHAIRMAN ABDEL-KHALIK: Thank you. The meeting is adjourned.

(Whereupon, the above-entitled matter went off the record at 6:08 p.m.)

South Texas Project Units 3 & 4
Presentation to ACRS ABWR Subcommittee
Chapter 12 Radiation Protection

Agenda

- Introduction/Attendees
- Chapter 12 Recap
  - Departures
  - Site Specific Supplemental Information
- Items of Interest
- Summary
- Conclusion

Attendees

Scott Head	NINA Manager, Regulatory Affairs, STP 3 & 4
Coley Chappell	NINA Licensing, STP 3 & 4
Tom Daley	NINA Engineering Supervisor, STP 3 & 4
Milton Rejcek	NINA Engineering, STP 3 & 4
Bob Quinn	Westinghouse

Chapter 12 Recap

During the March 2, 2010 presentation to ACRS ABWR Subcommittee on Chapter 12, the following were discussed:

- Departures:
  - Changes to Final Safety Analysis Report (FSAR)
  - Consistency changes due to other Tier 1 and Tier 2 departures
- Site-specific supplemental information:
  - COL License Information Items
  - Section 12.5S, Operational Radiation Protection Program, incorporates by reference NEI 07-03A
  - Section 12.5S incorporates by reference NEI 07-08A, policy and guidance for developing and implementing an ALARA program

Items of Interest

Subsequent to the March 2010 presentation, the following items of interest have been addressed:

- Supplemental design description for the Condensate Storage Tank (CST) and its radiation source term
- Spent fuel radiation source term

CST Supplemental Information

Responses to **RAI 12.02-18** (5/17/10) and **RAI 12.02-21** (10/27/10) added supplemental design information in the FSAR related to the CST and its radiation source term, for each Unit:

<u>CST design features</u>

- The CST, located outside the Turbine Building, is surrounded by a reinforced concrete dike which is designed to contain the entire CST contents and to prevent any liquid release outside the enclosure.
- The drain from the dike area and any CST overflow is routed to the Liquid Waste Management System (LWMS) for processing. All of the piping is routed in trenches or tunnels to identify, collect, and transfer any leakage to LWMS. High CST water level is alarmed in the Radwaste Building control room and in the main control room in order to prevent overflow.

CST Supplemental Information (cont'd)

CST source term and radiological controls

- A supplemental table FSAR shows the CST design source term activity by isotope. The contact dose rate from the CST containing this activity is < 0.1 mrem/hr (0.001 mSv/hr), and is small enough so that no radiological controls or radiation shielding is required.
- The CST enclosure is constructed so that radiological controls can be implemented, if needed during an abnormal event.

Spent Fuel Radiation Sources

Revised response to **RAI 12.02-20** (4/26/11) added supplemental information for spent fuel radiation sources in FSAR Tables 12.2-5a, b, Subsection 12.4.2, and a supplemental Appendix 12B.

- Describes design features and access controls that will be used to limit the dose rate to individuals working in the Spent Fuel Pool area and maintain dose ALARA during refueling activities.
- Appendix 12B provides site-specific information regarding the spent fuel pool (SFP) geometry and methodology used to generate SFP radiation sources and dose rate assessments.
  - The maximum activity bundle (with added margin) results in dose to the operator on the refueling bridge of 1.2 mrem/hr.
  - Result is approximately half the criteria of 2.5 mrem/hr stated in ANSI/ANS-57.1–1992, subsection 6.3.4.1.5.

Chapter 12 Summary

- All COL License Information Items have been addressed.
- All Requests for Additional Information have been addressed.
- All Open Items have been resolved with the staff.
- All previous ACRS action items related to Chapter 12 have been resolved.

Chapter 12

Questions and Comments

U.S.NRC

United States Nuclear Regulatory Commission

Protecting People and the Environment

Presentation to the ACRS Advanced Boiling Water Reactor Full Committee

South Texas Units 3 and 4 COL Application Review

Advanced SER with no Open Items – Chapter 12 "Radiation Protection"

June 21, 2011

U.S.NRC
UNITED STATES NUCLEAR REGULATORY COMMISSION
Protecting People and the Environment

Staff Review Team

- Project Managers
  - George Wunder, Lead PM, DNRL/NGE2
  - Michael Eudy, Chapter PM, DNRL/NGE2

- Technical Staff Reviewers
  - Charles Hinson, Reviewer, DCIP/CHPB
  - Stephen Williams, Reviewer, DCIP/CHPB
  - Edward Stutzcage, Reviewer, DCIP/CHPB

STP Units 3 & 4 COLA SER
Chapter 12
Presentation Summary

- All of the open items discussed at the March 2, 2010 ACRS Meeting on Chapter 12 have been closed
- Five items of interest in Section 12.2

  - Condensate Storage Tank (CST) radiation source term and tank description

  - Spent Fuel Pool (SFP) radiation source term information

  - Annual liquid and gaseous effluent source term evaluation

  - Annual liquid and gaseous effluent dose evaluation requested for evaluation of compliance with 10 CFR Part 20 and 10 CFR 50, Appendix I

  - Additional information requested for compliance with 10 CFR 20.1301(e) and 40 CFR Part 190

CST Radiation Source Term Information

(RAI 12.02-18 and RAI 12.02-21)

- Neither the STP FSAR nor the ABWR DCD specified source term information for the CST.

- The applicant modified the STP FSAR to include information on CST source term, geometry, radiation levels, underground piping, and radiation protection controls. The expected operating dose rate from the CST would be less than 0.1 mrem/hr.

- The staff finds the applicant's responses and the proposed revisions to the FSAR to be acceptable. (**Confirmatory Item 12.02-21**)

SFP Source Term Information

(RAI 12.02-14 and RAI 12.02-20)

- The ABWR DCD states that the COL applicant should provide radiation source term and geometry information for spent fuel stored in the SFP.

- During the review, DCD Tables 12.2-3b and 12.2-3c were found to contain a unit's error. The applicant proposed a departure from the ABWR DCD (STD DEP 12.2-1) which adds a footnote to both of these tables which precludes the COL licensee from using the information in these tables for detailed facility design or as the basis for any changes to the FSAR.

- Staff conducted an audit of the applicant (January 13, 2011) to:
  - -evaluate the applicant's SFP dose rate calculations.
  - -verify that the applicant's proposed supplement to the FSAR will adequately address the COL commitment.

- Staff finds the applicant's proposed FSAR revisions in response to RAI 12.02-20 acceptable. (**Confirmatory Item 12.02-20**).

Effluent Source Term Evaluation

(RAIs 12.02-2, 12.02-3, 12.02-9, and 12.02-10)

- Evaluation of the Annual liquid and gaseous effluent source terms
  - The applicant used the ABWR DCD/FSAR Tables for the FSAR effluent source terms.
  - The NRC used the verified GALE effluent source terms to perform compliance reviews for 10 CFR Part 20 and 10 CFR 50 Appendix I source terms.

- All applicant and NRC source terms for both gaseous and liquid effluents, meet the 10 CFR Part 20 “unity” calculations.

U.S.NRC
UNITED STATES NUCLEAR REGULATORY COMMISSION
Protecting People and the Environment

Effluent Dose Compliance Evaluation

(RAIs 11.02-2, 12.02-7, 12.02-8, 12.02-15, 12.02-16, and 12.02-19)

- The applicant's calculated effluent doses for 10 CFR 50 Appendix I were in compliance using the applicant provided source terms.

- The staff independently calculated effluent doses using NRC guidance and determined these results were in compliance with the design objectives of 10CFR50, Appendix I.

Radiation Dose Limits Evaluation

(RAIs 11.02-4, 12.02-7, 12, and 17)

- The applicant provided information in response to RAIs to demonstrate compliance with 10 CFR 20.1301(e), and 40 CFR 190, the EPA generally applicable environmental radiation standards.

U.S.NRC
UNITED STATES NUCLEAR REGULATORY COMMISSION
Protecting People and the Environment

Chapter 12 Summary

- All Requests for Additional Information have been addressed and with the exception of the remaining confirmatory items, all open items have been resolved.

- All COL License Information Items and the required information as defined in the ABWR DCD have been adequately addressed by the applicant.

- The staff concludes the applicant is in compliance with NRC regulations, requirements and guidance with respect to Radiation Protection.

U.S.NRC

United States Nuclear Regulatory Commission

Protecting People and the Environment

Questions/Comments

South Texas Units 3 and 4 COL Application Review

Advanced SER with no Open Items – Chapter 12 "Radiation Protection"

June 21, 2011

South Texas Project Units 3 & 4
Presentation to ACRS ABWR Subcommittee
Design Reliability Assurance Program
ACRS Action Item #30

Agenda

- Introduction/Attendees
- ACRS Action Item #30
- Conclusion

Attendees

Scott Head	NINA Manager, Regulatory Affairs, STP 3 & 4
Evans Heacock	NINA Engineering, STP 3 & 4
Tom Daley	NINA Engineering, STP 3 & 4
Coley Chappell	NINA Licensing, STP 3 & 4
Ricky Summitt	RSC/ETRANCO
Caroline Schlaseman	TANE/MPR

ACRS Action Item #30

Address when D-RAP list will be effectively populated and staff review is completed.

Response:

- An updated D-RAP list was provided and discussed on 10/20/2010.
- On 4/21/2011, as a follow up to that discussion, STP provided examples of the Deterministic Risk Ranking method for system inclusion in D-RAP.
- The D-RAP expert panel is used to augment PRA techniques in the risk ranking of SSCs by applying deterministic techniques, operating experience, and expert judgment to identify risk-significant SSCs not modeled in the PRA.
- The program for identification of site-specific SSCs for inclusion in D-RAP has been implemented and the expert panel established.
- The initial list of site-specific SSCs included in D-RAP is provided in Appendix 19K (ABWR DCD Tier 2 and STP 3 & 4 COLA).

ACRS Action Item #30 (cont'd)

- STP 3 & 4 committed to complete D-RAP expert panel system reviews, provide a list of the set of D-RAP SSCs, and have the program elements in place to control future activities by the third quarter of 2011 (COM 17.4-1).
- The results of this systems and structures review are summarized below:
  - 188 reviewed
  - 33 included based on PRA results
  - 37 included based on deterministic risk ranking process
  - 70 included in D-RAP
- Process for using the deterministic method will be completed in accordance with FSAR Section 17.4S, and verified by ITAAC.

Deterministic Risk Ranking - Example

- Example of expert panel deterministic risk ranking for inclusion in D-RAP:
  - High Pressure Nitrogen Gas Supply System (P54)
  - Expert Panel weighted score – 88

Question	Assigned Value	Weight Factor	Assessed Value
Is the function used to mitigate accidents or transients?	5	5	25
Is the function explicitly called out in EOPs or ERPs?	5	5	25
Does the loss of the function directly fail another risk-significant system?	5	4	20
Is the loss of the function safety-significant for shutdown or mode changes?	2	3	6
Does the loss of the function, in and of itself, directly cause an initiating event?	4	3	12
		Weighted Score	88

Deterministic Risk Ranking - Example

- Example of expert panel deterministic risk ranking for inclusion in D-RAP:
  - Alternate Feedwater Injection System (P15)
  - Expert Panel weighted score – 40

Question	Assigned Value	Weight Factor	Assessed Value
Is the function used to mitigate accidents or transients?	5	5	25
Is the function explicitly called out in EOPs or ERPs?	3	5	15
Does the loss of the function directly fail another risk-significant system?	0	4	0
Is the loss of the function safety-significant for shutdown or mode changes?	0	3	0
Does the loss of the function, in and of itself, directly cause an initiating event?	0	3	0
		Weighted Score	40

Deterministic Risk Ranking

- The sum of the weighted numerical values determines the category:
  - Score Range > 40, Category = HIGH (Risk Significant)
  - Score Range ≤ 40, Category = LOW (Non-Risk Significant)
- A function can receive a higher deterministic categorization if any one of the questions receives a high numerical answer:
  - A weighted score of ≥15 on any question results in HIGH category
  - This ensures that a function with a significant risk in one area does not have that risk contribution masked because of its low risk in other areas.
- In general, a component is given the same categorization as the highest categorized system function that the component supports.
- Thresholds values of >40 (sum) and ≥ 15 (single question) are based on Working Group deliberations associated with the STP 1 & 2 exemption.
- Results were validated by review and categorization of *thousands* of components, which were reviewed by NRC and conceptually the same as used in 10 CFR 50.69.

ACRS Action Item #30 (cont'd)

- The process for using the deterministic method will be completed in accordance with FSAR Section 17.4S, and verified by ITAAC.
- The STP 3 & 4 site-specific PRA model will be developed by initial fuel load as required by 10 CFR 50.71(h), and will continue to be refined over the life of the plant.
  - PRA model changes will be evaluated for impact on D-RAP.
  - Periodic adjustments to risk rankings will be updated, as required, after each plant specific PRA update, in accordance with 10 CFR 50.71(e).

Conclusion

- The D-RAP process for maintaining, revising, and when necessary establishing new risk rankings for modified design is based on PRA and deterministic techniques.
- Reliability assurance activities are established by:
  - D-RAP conducted during certification of the ABWR.
  - D-RAP for STP 3 &4 site-specific design including procurement, construction, fabrication, and testing leading up to initial fuel load.
- The initial list of site-specific SSCs included in D-RAP is provided in Appendix 19K (ABWR DCD and STP 3 & 4 COLA).
- D-RAP documentation will be verified by ITAAC as approved for the ABWR Certified Design.

Action Item #30: D-RAP

Questions and Comments

South Texas Project Units 3 & 4
ACRS ABWR Subcommittee Presentation

ACRS Action Items

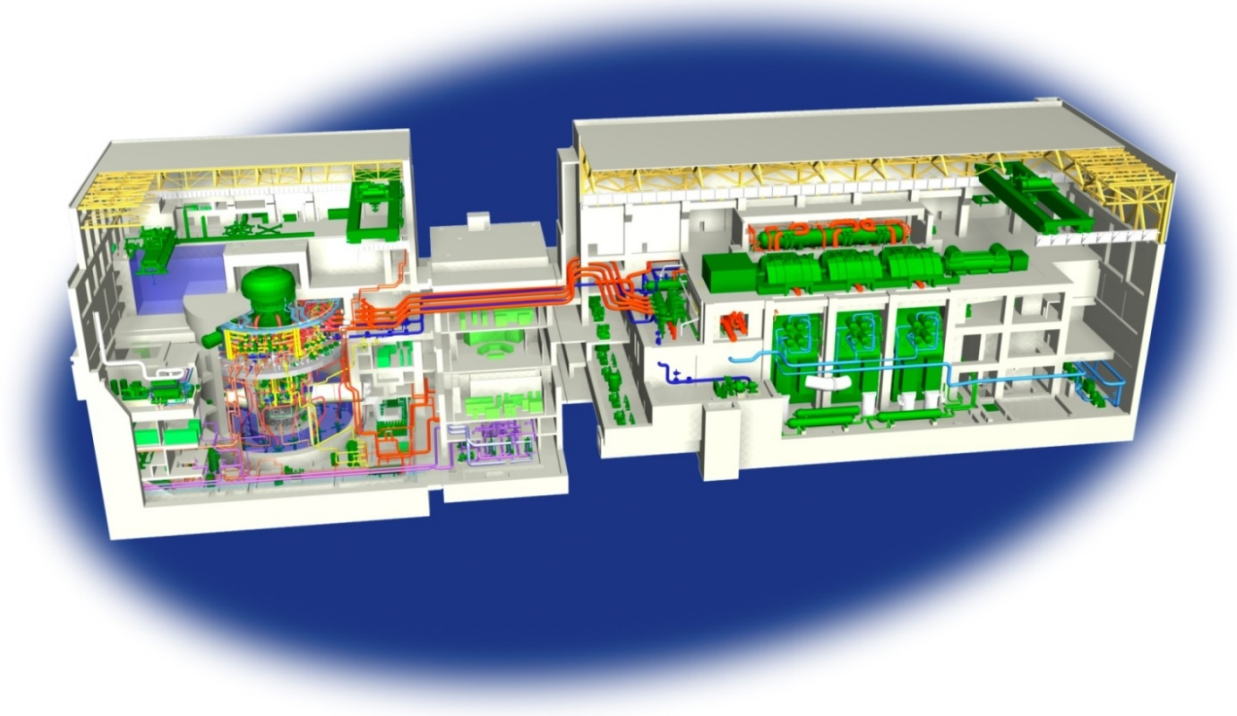

Agenda

- Introduction/Attendees
- Overview of STP 3 & 4 Reactor Core Isolation Cooling (RCIC) Turbine/Water Lubricated Pump and ACRS Action Items:
  - #89, Manual control of RCIC
  - #71, RCIC pump qualification with respect to internal components and quality of lubricating water
  - #70, Net Positive Suction Head for RCIC
- Action Item #87, Speed sensor failure for Main Turbine primary overspeed protection subsystem
- NINA update on Action Item #42
- Conclusion

Attendees

Scott Head	NINA Manager, Regulatory Affairs, STP 3 & 4
Tom Daley	NINA Design Engineering Lead, STP 3 & 4
Evans Heacock	NINA Engineering STP 3 & 4
Coley Chappell	NINA Licensing STP 3 & 4

STP 3 & 4 RCIC Turbine/Pump Overview

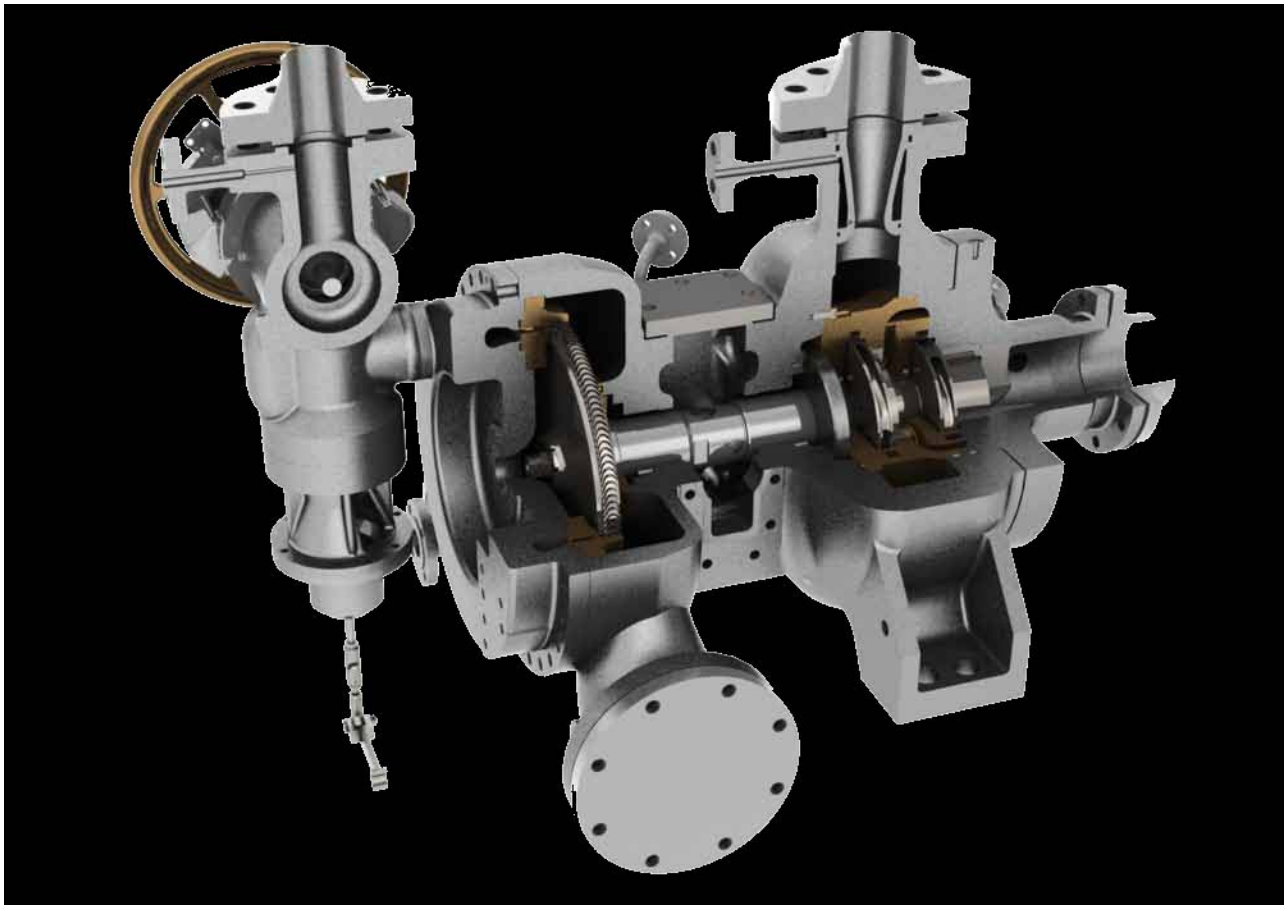

RCIC Pump Flow Control

Sketch of TWL pump flow control.

As pump flow increases, steam inlet closes.

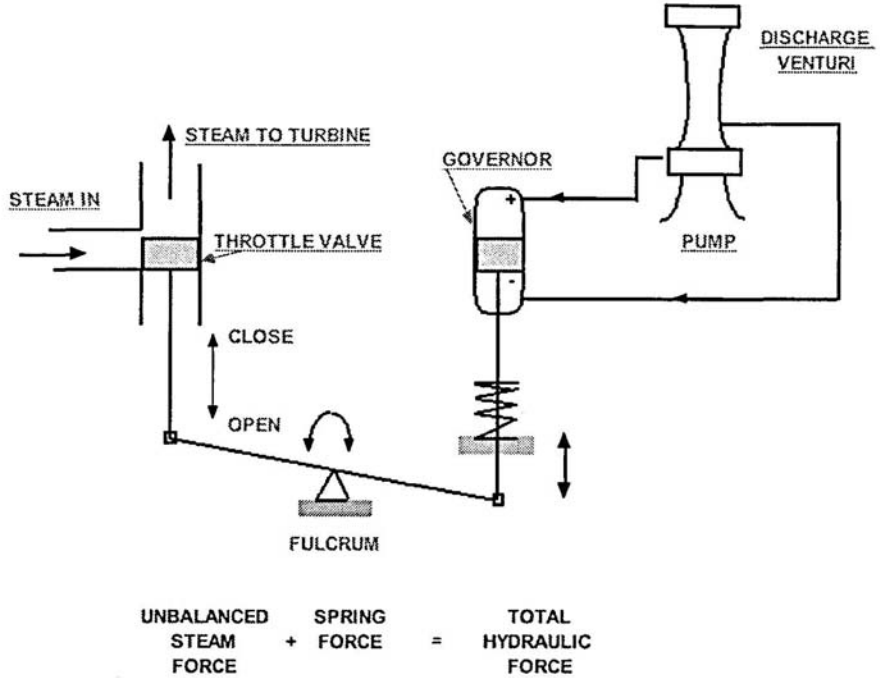

For comparison, conventional turbine control.

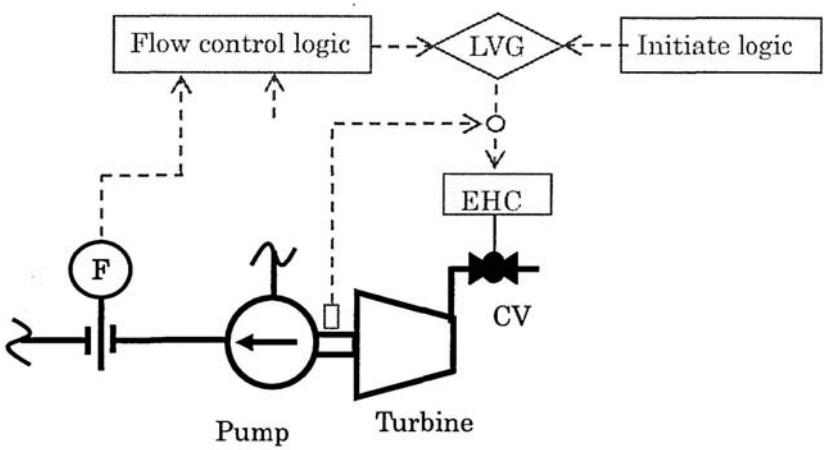

RCIC Pump Start Transient - Comparison

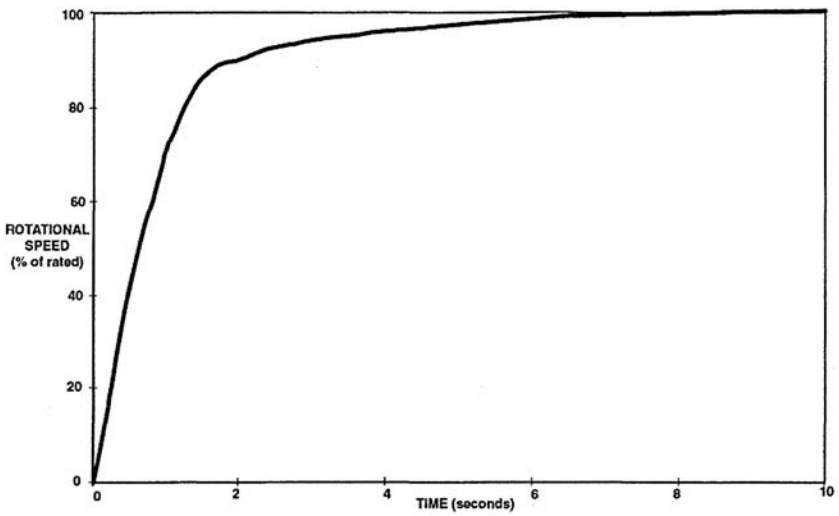

Typical start transient of TWL pump.

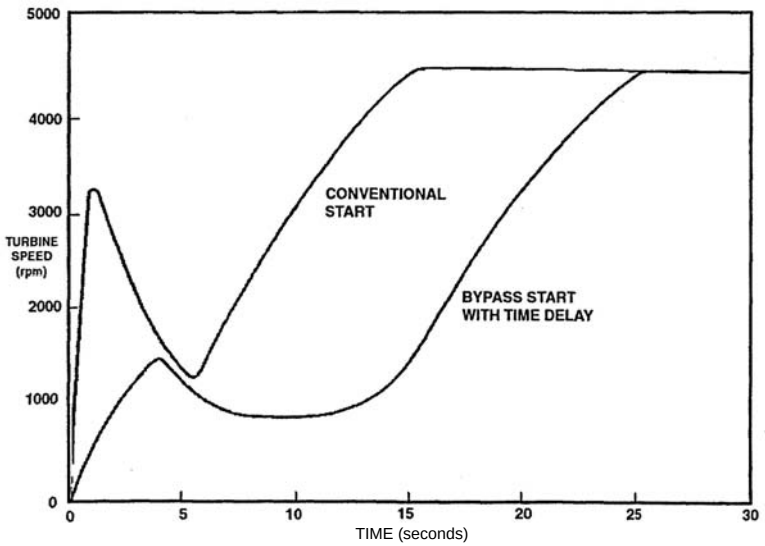

Typical start transient of conventional pump.

RCIC System

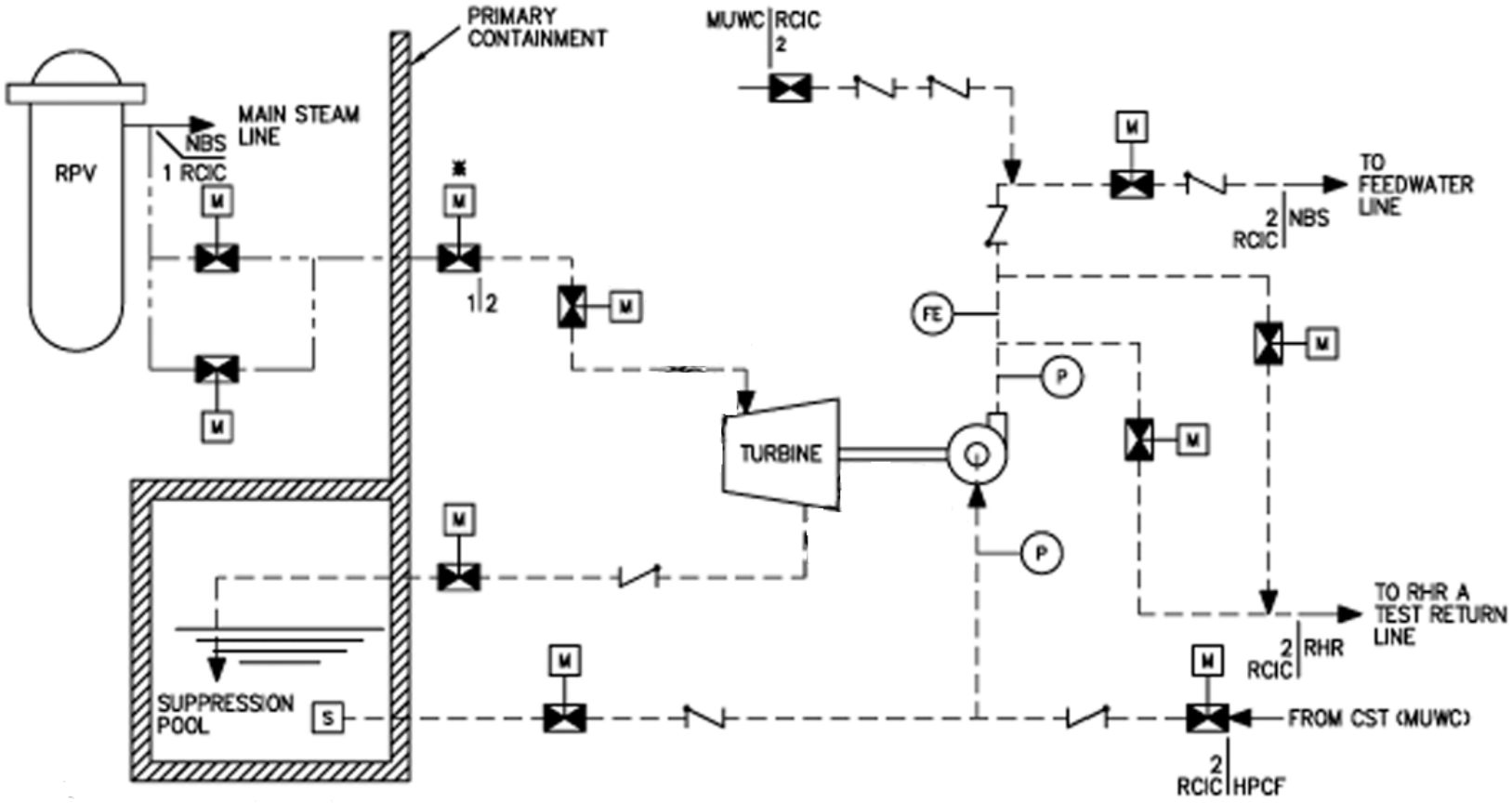
PRIMARY CONTAINMENT
MUWC
RCIC
2
RPV
MAIN STEAM LINE
NBS
1 RCIC
M
1
2
TO FEEDWATER LINE
2 NBS
RCIC
FE
P
TURBINE
TO RHR A TEST RETURN LINE
2 RHR
RCIC
SUPPRESSION POOL
S
FROM CST (MUWC)
2
RCIC HPCF

Action Item # 89

Discuss manual operation of RCIC System under various scenarios including station blackout (SBO).

Response: RCIC can be operated manually from the main control room or remotely

- System valves can be operated outside the main control room from their associated Motor Control Centers
  - Loads can be stripped to extend battery operability beyond 8-hour design basis for SBO
- RCIC can also be controlled when no power is available by local manual operation of system components (e.g., Steam admission and flow injection valves)
- Procedural guidance will be developed regarding RCIC System operation under all conditions

Action Item # 71

RCIC pump qualification with respect to internal components and quality of lubricating water.

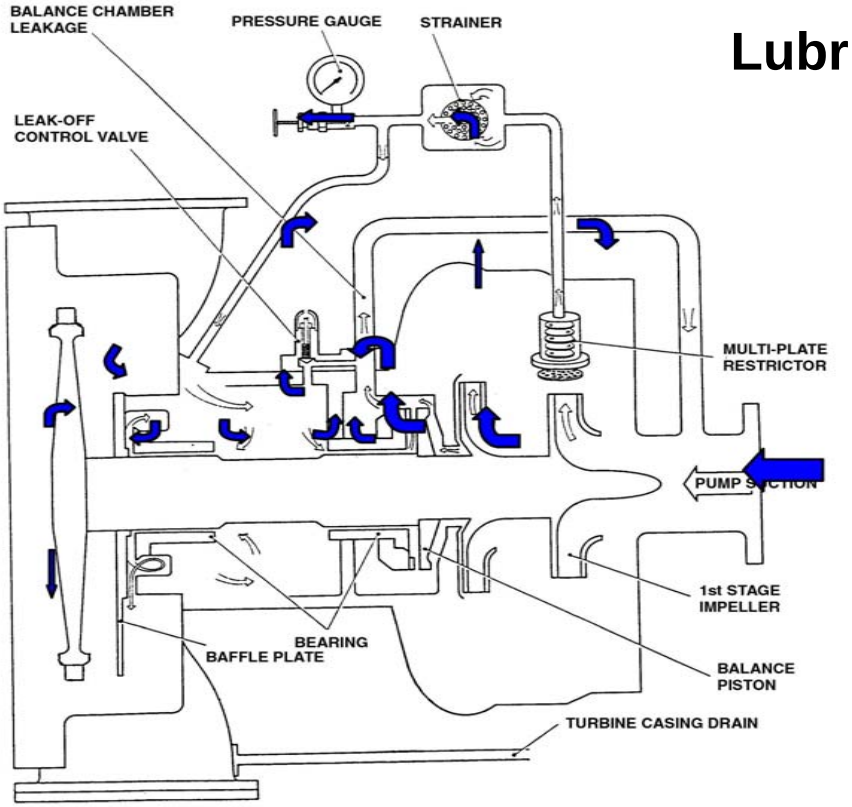

Lubrication Flow

Action Item # 71 (cont'd)

Response:

- The capability of the filter to provide sufficient flow to the RCIC pump bearings under postulated post-LOCA conditions will be confirmed during functional qualification testing required by ASME Standard QME-1-2007.

Action Item # 71 (cont'd)

Likelihood of pump damage due to plugging of filter by debris is minimized by:

- Preferred source for RCIC is Condensate Storage Tank
  - Makeup grade water source
- Suppression Pool (SP) water quality is maintained by the SP Cooling and Cleanup System
- Non-LOCA Events (Potential long-term RCIC operation)
  - No LOCA generated debris
- Post-LOCA mission time for RCIC operation is short
  - 3 Minutes-Large Break
  - 7 minutes-Small Break (Flooder line break)

Action Item # 70

Net positive suction head for Reactor Core Isolation Cooling (RCIC) pump at 100°C (vice 77°C).

Response:

- As stated in DCD Tier 2 Table 5.4-1a, maximum suppression pool temperature during RCIC operation is 77°C.
- An H_{atm} value consistent with 100°C was inappropriately applied during implementation of STD DEP 6C-1.
- NINA will revise Table 5.4-1a to return H_{atm} to DCD value 10.62m, which is consistent with a maximum SP temperature of 77°C: (U7-C-NINA-NRC-110053, dated 4/5/2011)

NPSH available = $H_{atm\ \cancel{(100°C)}(77°C)} - H_{vapor\ (77°C)} + H_{static} - H_{friction}$

Action Item # 70 (cont'd)

- Margin to required NPSH is maintained for RCIC at 77°C design suppression pool temperature.
- ABWR DCD ITAAC will verify adequate NPSH of as-built RCIC system.

Action Item # 87

Address a failure of the speed sensors in the primary overspeed protection subsystem for the main turbine.

Response: The speed sensor signals for primary overspeed protection will be capable of being indicated and, in the event of a failure, alarmed in the main control room:

- Failure of these speed sensors does not affect the redundant emergency overspeed protection subsystem or the normal turbine speed control.
  - The passive-design speed sensors for primary overspeed protection are separate and diverse from the active-design speed sensors used for normal speed control and emergency overspeed protection.

Action Item # 87 (cont'd)

- Operators will be directed by procedure to take appropriate manual action.
  - Timely action ensures a very low potential for any turbine overspeed event to occur while the primary overspeed protection is degraded.
- Because failure of these speed sensors does not result in an automatic turbine trip, and this level of detailed design is typically not in the FSAR, no revision is required.

Action Item # 42

Main turbine missile analysis and maintenance program will be submitted to NRC within 3 years of COL issuance.

Response: The ACRS comments on the two reports, which are the starting point for the documents that will satisfy the FSAR commitment, have been added to the STP 3 & 4 ABWR corrective action program.

These comments will be considered as part of the development of the final documents.

ACRS Action Items - Conclusion

Questions and Comments