GSI-191 Downstream Effects – Alternate Flow Paths

Gordon Wissinger
AREVA NP, Inc
NRC, March 3, 2011

AREVA

Background

- **Past FA testing has shown**
  - **HL break is limiting**
  - **For limiting p:f ratio, fiber bed forms at core inlet; as p:f ratio increases, multiple fiber beds form**
  - **dP for fiber and particulates only < available driving head for 60 to 150 g of fiber**
  - **Complete blockage in FA test <u>only</u> occurs for:**
    - Single debris bed at the core inlet (i.e. low p:f ratios)
    - After the addition of chemical precipitates (which form later in the event)
- **Past FA testing is conservative and idealized**
  - **Variations in flow patterns of LP not considered**
  - **Boron, buffer, and high temperature effects are neglected**
  - **Alternate flow paths neglected – all flow enters core through bottom of fuel assemblies**

Background

- IF limiting scenario occurs and the FA inlet blocks completely, then there are at least 2 other paths for fluid to reach the core:
  - Through baffle region (for plants with upflow baffle designs)
  - By spilling over the SG or HL U-bend

AREVA

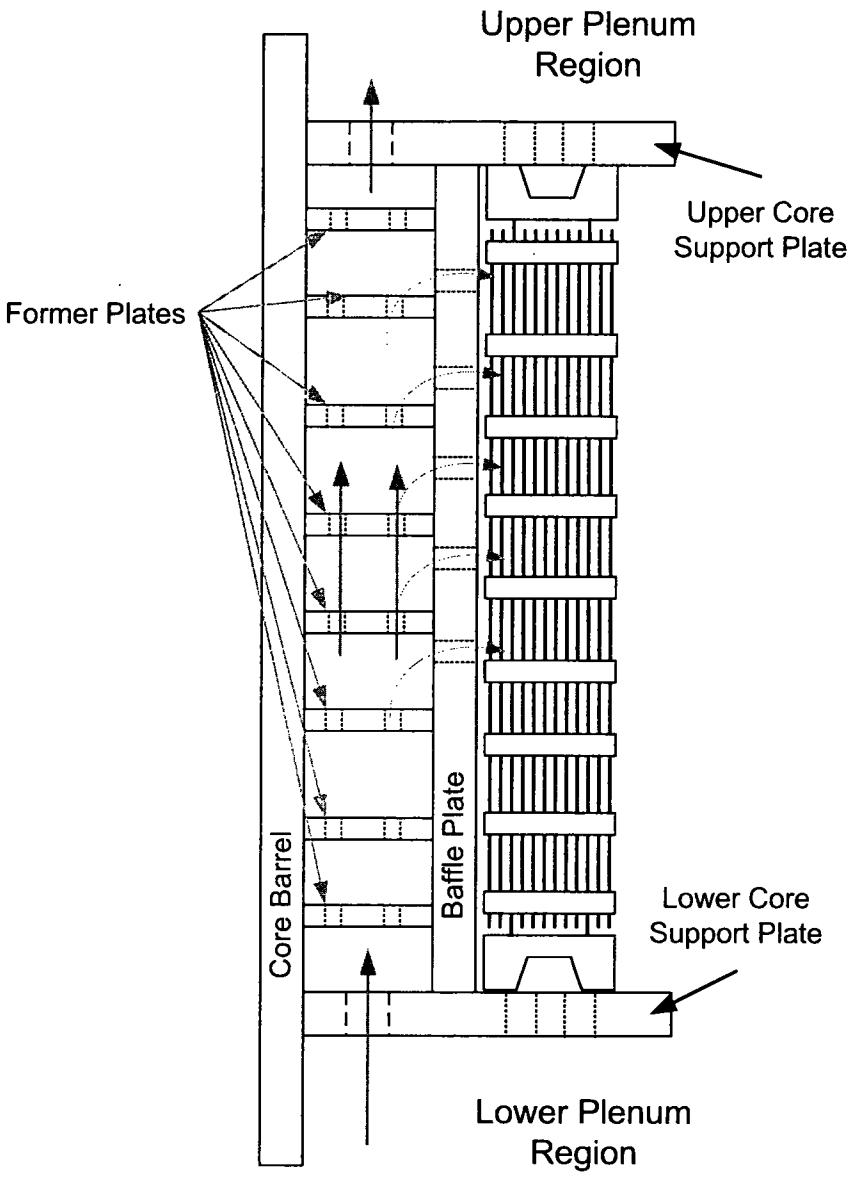

Baffle

- **Flow is only possible if**

  Holes in this region are large compared to debris

  - 85% of fiber < ~0.02"
  - During FA tests, 2.75" holes in simulated LCP did not clog

  Available driving head > flow losses

  - Liquid level in DC and loops to spillover elevation
  - Liquid level in baffle to top of core
  - Flow losses calculated by Darcy's Equation

- **Resulting flow rate must be greater than core boiloff + 15% to maintain LTCC**

AREVA

Baffle

- **Major Assumptions:**
  - Core inlet completely blocked
  - Available driving head calculated with conservative densities
  - No boiling is assumed in baffle region
  - Liquid level in baffle solid to top of core
  - Level on DC/SG side assumes siphon effect for W & CE plants
- **Approach**
  - Hand calculation
  - Code calculation
- **Example Results:**

Plants Serviced	Available dP (psid)	Baffle k/A^2 ($1/ft^4$)	Baffle Flow (lbm/s)	Smallest Opening in baffle (inch)	Core Boiloff Rate +15% at time of Sump Switchover (lbm/s)
No Siphon	19	20	~710	1.0	86.0
Siphon	3	135	~110	0.75	73.8

AREVA

Spill Over

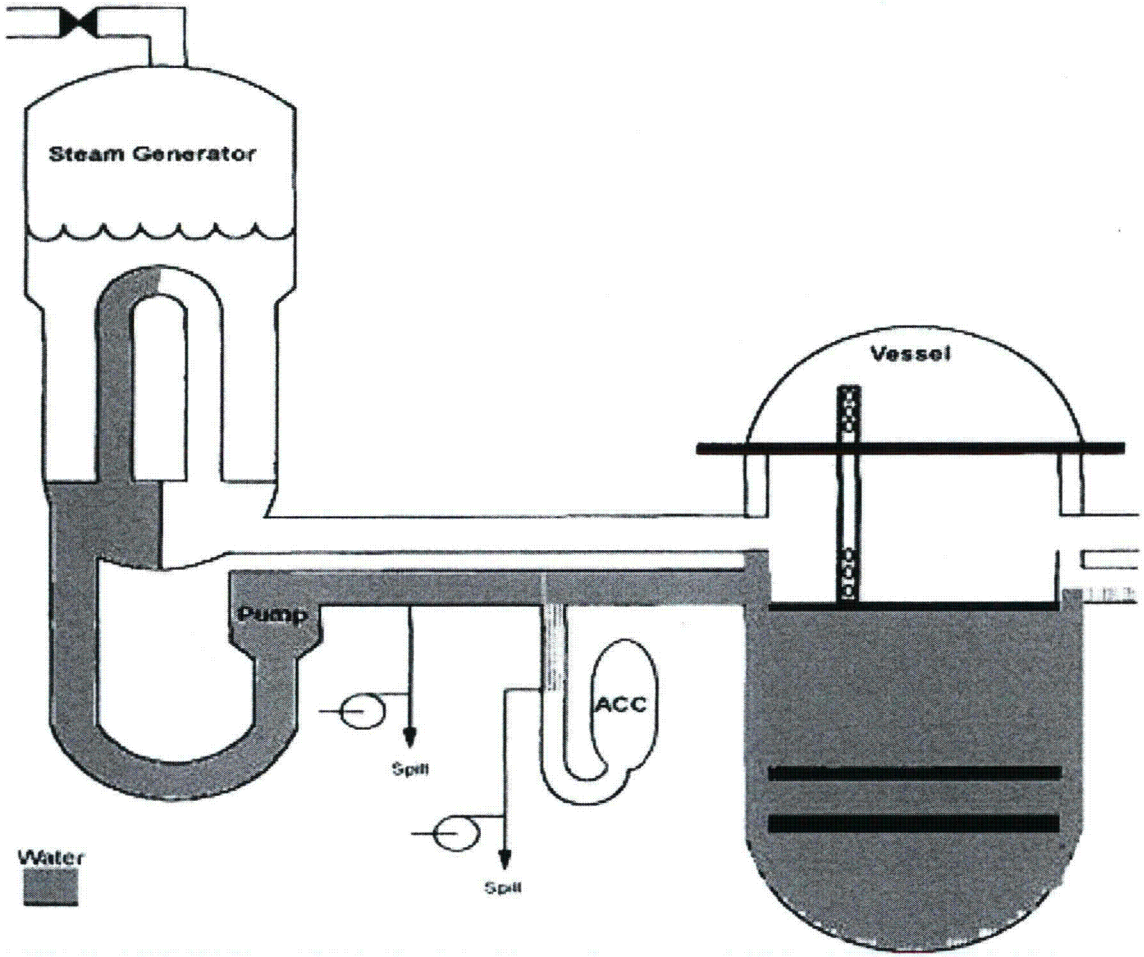

AREVA

Spill Over

- **Major Assumptions:**
  - Core inlet completely blocked
  - Level on DC/SG side assumes siphon effect for W & CE plants
- **Approach**
  - Code calculation
- **Results**
  - With all ECCS spilling over, significant flow will reach the top of the core through intact loops

AREVA

Conclusion

- **Past FA testing has shown**

  For limiting p:f ratio, fiber bed forms at core inlet; as p:f ratio increases, multiple fiber beds form

  dP for fiber and particulates only < available driving head for 60 to 150 g of fiber

  Complete blockage in FA test <u>only</u> occurs for:

  - Single debris bed at the core inlet (i.e. low p:f ratios)
  - After the addition of chemical precipitates (which form later in the event)

- **Future FA testing is intended to show**

  Boron, buffer, and higher temperatures reduce dP for same fiber loads

  Boiling will disrupt debris beds at upper elevations and allow liquid spilled over to cool the core

- **Alternate flow paths provide defense-in-depth**

  If limiting scenario were to occur and the core blocks completely, other paths exist for ECCS to reach the core and remove DH

  Additional debris loads above that established by idealized testing can actually be tolerated

AREVA