Official Transcript of Proceedings

NUCLEAR REGULATORY COMMISSION

Title: Advisory Committee on Reactor Safeguards
AP1000 Reactor Subcommittee Meeting
Open Session

Docket Number: (n/a)

Location: Rockville, Maryland

Date: Friday, November 19, 2010

Work Order No.: NRC-558 Pages 1-177

NEAL R. GROSS AND CO., INC.
Court Reporters and Transcribers
1323 Rhode Island Avenue, N.W.
Washington, D.C. 20005
(202) 234-4433

DISCLAIMER

UNITED STATES NUCLEAR REGULATORY COMMISSION'S
ADVISORY COMMITTEE ON REACTOR SAFEGUARDS

The contents of this transcript of the proceeding of the United States Nuclear Regulatory Commission Advisory Committee on Reactor Safeguards, as reported herein, is a record of the discussions recorded at the meeting.

This transcript has not been reviewed, corrected, and edited, and it may contain inaccuracies.

UNITED STATES OF AMERICA

NUCLEAR REGULATORY COMMISSION

+ + + + +

ADVISORY COMMITTEE ON REACTOR SAFEGUARDS

(ACRS)

+ + + + +

AP1000 REACTOR SUBCOMMITTEE MEETING

OPEN SESSION

+ + + + +

FRIDAY,

NOVEMBER 19, 2010

+ + + + +

ROCKVILLE, MARYLAND

+ + + + +

The Advisory Committee met, at the Nuclear Regulatory Commission, Two White Flint North, Room T2B1, 11545 Rockville Pike, at 8:30 a.m., Harold B. Ray, Chairman, presiding.

COMMITTEE MEMBERS:

HAROLD B. RAY, Chairman

J. SAM ARMIJO, Member

SANJOY BANERJEE, Member

DENNIS C. BLEY, Member

MARIO V. BONACA, Member

CHARLES H. BROWN, JR., Member

MICHAEL T. RYAN, Member

WILLIAM J. SHACK, Member

NRC STAFF PRESENT:

BRIAN ANDERSON, NRO/DNRL

JOHN BUDZYNSKI, NRO/DSRA/SRSB

RALPH LANDRY, NRO/DSRA

EILEEN MCKENNA, NRO

JOHN MCKIRGAN, NRO

KENNETH MOTT, NRO/DE/ICE1

WILLIAM A. ROGGENBRODT III, NRO/DE/ICE2

WEIDONG WANG, Designated Federal Official

PRESENT FROM WESTINGHOUSE:

CHUCK BROCKHOFF

RUSTIN BURGER

ED CUMMINS

JOHN EWALD*

CESARE FREPOLI*

MEGAN GENUSKE

JEFF HIMLER

MICHAEL LAMBERT

MIKE MELTON

WARREN ODESS-GILLETT*

RICK OFSTUN

TERRY SCHULZ

BOB SEELMAN

ROB SISK

MARK STELLA*

YIXING SUNG*

ALSO PRESENT:

THOMAS S. KRESS, ACRS Consultant

GRAHAM B. WALLIS, ACRS Consultant

BOB HIRMANPOUR, NuStart

*Present via telephone

C-O-N-T-E-N-T-S

A-F-T-E-R-N-O-O-N S-E-S-S-I-O-N

(1:17 p.m.)

CHAIRMAN RAY: We'll go on the record. And the floor is yours.

MR. ANDERSON: Thank you, Mr. Chairman.

4. CHAPTER 23 GAS INTRUSION, PCS AIR VENTS

MR. ANDERSON: My name is Brian Anderson. I'm a Project Manager in the Division of New Reactor Licensing. The next series of presentations from the staff will be related to the staff's chapter 23, the safety evaluation report. This chapter contains the staff's evaluation of design changes that were submitted by Westinghouse in accordance with the guidance of ISG-11.

With me on the panel are some of the technical staff members that were involved in the staff's evaluation of these proposed design changes. John Budzynski is a technical reviewer in our Reactor Systems Branch. Hien Le is a technical reviewer in our Technical Specifications Branch. And Michelle Hayes is a technical reviewer in our Containment Systems Branch.

CHAIRMAN RAY: I understand why you only have some of them up there because we've got a lot of changes to consider here, don't we?

MR. ANDERSON: That's right. Just to provide a little bit of an overview to chapter 23 before we get into some of the technical discussion and as a follow-up to some of the information that Westinghouse provided earlier.

Chapter 23 is an SER that has not been previously presented to this Committee, has not been issued as an SER with open items, but it was issued in late October as an SER without open items.

Chapter 23 evaluates most of the proposed design changes that Westinghouse submitted to the NRC staff following rev. 17 of the DCD and not attached to or connected to any previous RAI or open item.

In addition, the staff's evaluation or proposed design changes address those that satisfy one or more of the criteria of ISG-11. ISG-11 is the guidance for finalizing licensing basis documents. In Westinghouse's presentation, you saw that referred to as the freeze points of the design.

And, in part, ISG-11 describes types of changes, categories of changes, that should not be deferred until after the issuance of the design certification rule.

The categories of those changes are listed on the slide in front of you. They include items like

the correction of significant errors and significant technical corrections associated with the design.

And if there are no questions in that --

CHAIRMAN RAY: Well, contrast it with something that can be deferred, just as an example.

MS. McKENNA: This is Eileen McKenna. There are changes that perhaps the applicant identified as an improvement, you know, to give it more flexibility in procurement. And they originally had included some of those when they first started talking about these post-17 changes.

And based on our workload and other considerations, we really asked them to focus down on those that had to be done. One example that I can speak of, think of off the top of my head, there was a change.

They wanted to change from a -- I may get this backwards -- a gold valve to a gate valve. And it happened to be written that way in the DCD. And that was a change they wanted to make, but it didn't meet one of these criteria. So we said, "Take that one off the table." So it was that kind of thought process.

CHAIRMAN RAY: All right. But these are not things that then can be done without processing an

amendment, then. Is that correct?

MS. McKENNA: Then it would be up to the COL through the departure process to evaluate them --

CHAIRMAN RAY: I see. All right. Okay.

MS. McKENNA: -- to see whether they could do them without approval or they would require amendment.

CHAIRMAN RAY: So it's not a matter of, well, let's buy off on this amendment at this point in time and then we'll expect another one coming in the door shortly.

MS. McKENNA: We don't expect these other ones to come as an amendment. If they happen, they would be departures.

CHAIRMAN RAY: I see. All right.

MR. ANDERSON: Yes. The first technical presentation the staff is going to make is related to changes that were proposed for the passive core cooling injection lines. The Committee had received presentations on this issue at least once in the past, Westinghouse presentations, but the following slides are for the staff's presentation.

MR. BUDZYNSKI: My name is John Budzynski. And I did the technical review of the changes to the passive cooling system injection lines. And basically

what we did is we had the capability to vent unconvincable gases from those lines. And we added approximately eight valves, manual valves, that will allow them to vent the gases is what it does.

This system is basically the same as that they have for the CMT, where they have a pipe stub and a probe that's put in there that determines the level indication. And when the gas builds up to a point where the water no more -- the probe is no more submerged in the water, then you get an indication in the control room and locally. And when that happens, they have time to go out and enter the containment room and vent it.

And these valves are located where they can enter the containment room but at full power conditions. So it makes them easy. They can get them when they want to. Also, they added tech specs conditions.

There are actions to this in modes 1 through 4. There were two actions. If one of them is alarm, they have I think 24 hours to vent it. And if both of them are alarm, they have eight to get one of them into a vented condition and repair.

Basically I didn't see any problems with this going through. And since a previous was already

approved in the pervious one for CMT and also for the passive heat RHR system, they also have just basically the same setup and seem to be pretty big coincidence.

CHAIRMAN RAY: Okay.

MR. BUDZYNSKI: Any questions?

CHAIRMAN RAY: I don't think there are questions. Go ahead.

MR. BUDZYNSKI: Okay. The conclusion, we did the AP1 design testing. And NRC staff -- we base part of this on historical data that confirmed that the test can demonstrate that a passive safety injection systems are not susceptible to any adverse effects from gas heat intrusion. It's very minimal.

But the applicant decided to put these in place and also that the AP1000 passive safety systems are not susceptible to pump-related problems, as they do in an active system. So there would be no gas binding, as you would see in a system with pumps. And the water primer effects would be a lot less.

If it was invented, they did notice a little bit of flow instability but insignificant.

CHAIRMAN RAY: All right. If that makes sense? Thank you.

MR. ANDERSON: The staff's next presentation is related to the proposed design changes

for the classic containment cooling system. This follows with Westinghouse's presentation from before lunch.

MS. HAYES: I'm Michelle Hayes from the Containment Branch, here to talk about the enhanced shield building changes to the PCS.

As Westinghouse mentioned in their presentation this morning, there is an increased resistance in the air flow path in the enhanced shield building. And, as a result, the air velocity decreases, as does the cooling capability of the natural circulation air flow path, which led Westinghouse to reduce the air-only cooling limit, which led them to increase the thermal capacity of the spent fuel pool, which led them to change the direction of the flow, taking flow away from the PCCWST so that it's available from the PCS so that it's available for the spent fuel pool post-72 hours.

The first two changes impact normal operations. So the associated tech specs were revised. I want to point out that the impact of these changes on the spent fuel pool was included in the chapter 9 discussion that you guys hand the end of October. So we're not going to get into those here. I'll just be focusing on the PCS.

Next slide. During the design certification, Westinghouse referenced a series of tests to qualify the AP1000 PCS evaluation model. That's the WGOTHIC modeling process.

They went back and looked at all of these tests that they used: the integral test and the mass and heat transfer test. And the only one that was impacted by the changes to the shield building was the air flow characterization test. So they and redid that. And, as expected, the flow pressure drop increased with the new design.

Westinghouse incorporated the revised shield building with the more restrictive flow path into the NRC-approved WGOTHIC model and performed several analyses.

The first analysis demonstrated the new design, had negligible impact on the peak containment pressure and temperature during their design LOCA and MSLBs, which we would expect because the water provides a much more significant evaporative cooling than does the air flow.

The next two items were air-only cooling events, which we saw a big difference in. And Westinghouse demonstrated that the PCS water is not required for the containment shell when the reactor

heat is less than six megawatts, which is different than the nine megawatts that was in the previous design, and that the containment shell would not fail, even if water is unavailable for 24 hours. This was a beyond design basis accident. And it's consistent with the current PRA assumptions. So chapter 19 is unaffected by this change.

The final analysis demonstrated that some of the post-72-hour cooling water reserved for the containment shield may be redirected to the spent fuel pool if the reactor is in refueling. If the reactor is not in refueling, the current DCD-specified flow rate of 100 GPMs applies.

Next slide.

DR. WALLIS: Are you satisfied that 88 GPM will cool the containment effectively, that the way it's distributed and all of that will work?

MS. HAYES: We did audit. Go the next slide. I'm going to address that on this next slide, that we did an audit of the analysis and found the assumptions were conservative. For this particular case you're talking about, the PCS flow is reduced to 80 GPM. The staff found the analysis acceptable because the WGOTHIC model used the evaporated limited flow.

DR. WALLIS: How do you know it's all going to evaporate?

MS. HAYES: As opposed to? The way they do that, evaporation --

DR. WALLIS: Flowing down in rivers and not evaporating.

MS. HAYES: And Megan could help me out here. The way they do that evaporation-limited flow, I mean, that process was what was approved in the SER. And I didn't really get into how they --

DR. WALLIS: So it's okay because it's been approved before?

MS. HAYES: The process? No. That's part of it. And the next part of it is they had a huge margin. Even with 65, they still had like 39 psi.

DR. WALLIS: As long as it all evaporates?

MS. HAYES: Sixty-five evaporates. And they're not putting 65 on there. They're doing an iterate process.

DR. WALLIS: Does it all evaporate is the question. I mean, if it --

MS. HAYES: No. The value that they put in the model is less than 65. It's what they iterate evaporates.

DR. WALLIS: Were you here for our

discussion earlier about --

MS. HAYES: I heard your discussion this morning. And there was a lot of references to previous discussions. I didn't know what you were talking about there.

DR. WALLIS: Okay.

CHAIRMAN RAY: Let me try it this way. Supposing you put the water on the containment shield and it were to run down in such a way that it didn't evaporate enough to meet these heat removal assumptions. Just imagine that situation.

MR. McKIRGAN: If I could? Mr. Chairman, this is John McKirgan for the staff.

CHAIRMAN RAY: Yes. Just let me try for a minute.

MS. HAYES: Okay. So it's not removing the six --

CHAIRMAN RAY: Yes. It's just running down, but --

MS. HAYES: It's not removing the heat in containment 100 hours after. We're also going to go with there was so much margin. The design pressure was only getting up to less than 40. And you have up to 80.

CHAIRMAN RAY: Well, that's right if --

MS. HAYES: There was something grossly different in our assumptions that would account for --

CHAIRMAN RAY: Yes. The assumption is that you evaporate enough water to remove the heat.

MS. HAYES: Yes.

CHAIRMAN RAY: I'm just trying to have you imagine with me that the water flows over the surface in such a way that that doesn't happen. Can you imagine that?

MS. HAYES: It's not going to evaporate. It's just not going to perform a --

CHAIRMAN RAY: That's right.

MS. HAYES: It's just all grouped together and you go down into the --

CHAIRMAN RAY: Right, exactly. Yes.

MEMBER BANERJEE: So think of this. You have distributed one GPM for the six feet, one GPM. When you open your faucet, you get about four GPM. So if you really think of it physically, one GPM is a little dribble of water. This is being distributed over six feet. Think of it physically. It has to all come down as a uniform film.

MS. HAYES: I'm not talking about one GPM.

MEMBER BANERJEE: I'm talking about --

MS. HAYES: I'm talking about 80 GPM.

MEMBER BANERJEE: No. One GPM over six feet.

PARTICIPANT: A segment.

CHAIRMAN RAY: Six feet is --

MS. HAYES: Oh, okay. I'm just --

MEMBER BANERJEE: Think of it physically. It's like a little thing running out of your faucet. It has to be evenly distributed over six feet. Do you really think it's -- what do you think will happen? That's the problem with looking at GOTHIC and not actually running the faucet and seeing.

MS. HAYES: Right. And I did not spend a lot of time looking into how they qualified the WGOTHIC flow.

MEMBER BANERJEE: I'm not talking about flow. I'm just saying, is it reasonable?

MR. McKIRGAN: Mr. Chairman, if I could?

MS. HAYES: Well, I don't --

CHAIRMAN RAY: I'm going to ask you to wait just a little bit longer.

MEMBER BANERJEE: That's reasonable.

MR. McKIRGAN: I'm going to ask the staff, Michelle, not to speculate. If you did not do this review, please do not speculate.

MR. BERGER: This is Rusty Berger from

Westinghouse. Would it help if we talked about the evaporation-limited technique just to give you guys an understanding of how we model that or a discussion, whatever --

CHAIRMAN RAY: Well, the staff is up now. And I think we tried to help. When the staff members said they couldn't understand it, we tried to get them to understand it. But now we are --

MEMBER BANERJEE: You understand --

CHAIRMAN RAY: We're going to stop now. And we're not even going to try and get you to understand it because I guess that involves speculation.

So go ahead with whatever you want to say.

MS. HAYES: Based on the margin, I found the post-72-hour flow and the way they did it was consistent with the way they have done it in the previous revisions.

And then we also ran for confirmatory analysis using the CONTAIN model. And we also put the flow on and assumed the same distribution as we had assumed in the previous and got the same results as Westinghouse. And so we concluded the proposed changes were compliant with the relevant DCDs and also the 10 CFR 50.47 that requires you to have testing

supporting the passive plant design.

I am done.

CHAIRMAN RAY: There's nothing that we can say, I guess.

MR. ANDERSON: That concludes our presentations for this conference.

CHAIRMAN RAY: Thank you.

Well, all right. We're back to Westinghouse, are we? Are we going to continue with your discussions?

MS. McKENNA: Yes, Mr. Chairman. What I tried to do with the agenda was kind of give a couple of changes by the applicant, a couple of changes by the staff, rather than five changes and --

CHAIRMAN RAY: Yes. That's fine.

MS. McKENNA: -- so they wouldn't get so intermingled. So we are going to go back to the applicant for --

CHAIRMAN RAY: Yes. Well, I understand. I mean, I think that it's difficult, though, when we're trying to communicate with the staff and get them to understand how we're trying to ask the question to have them be told that they can't respond to us.

Just I don't know what to do. I guess we

just have to put it in writing is the only thing I can think of.

MR. McKIRGAN: Certainly, Mr. Chairman. And I think, as you alluded before, the issues there were resolved in rev. 15. And the staff does not review issues that were not part of the amendment.

CHAIRMAN RAY: That's fine. Anybody can make that observation. I can. The staff can. But the question had -- the point was we are trying to imagine how under this amended design the film behaves. And we were trying to have a dialogue with the staff on that subject. But we'll give up and, like I say, put it in the letter, I guess.

5. CHAPTER 23 ITEMS - VACUUM RELIEF, CCS ISOLATION

MR. MELTON: Okay. We're going to present on change notice 74, containment vacuum relief system. And then after that, we have another one on the containment cooling system.

CHAIRMAN RAY: Okay.

MR. MELTON: Chuck Brockhoff is going to lead the discussion on this. I'm going to go open up a conference line. Please give me one minute.

CHAIRMAN RAY: All right.

MR. BROCKHOFF: Yes, sir. This is for chapter 23W, containment vacuum relief system. And

your handouts are coming around right now.

This is a diagram that shows a vacuum relief system was added. What I wanted you to do was kind of look at that diagram. And I'll go through the second slide, which is an overview of what the changes were.

Fundamentally we added -- using existing purge exhaust penetration, we added outside of containment two parallel butterfly-operated valves and inside containment two parallel check valves that are balanced check valves opened with a slight pressure.

And in the right conditions, we basically take outside air and use it to pressurize containment in a situation where containment pressure is decreasing. And I'll talk about what that condition is. So, anyway, you can take a look at this.

So normally this is a purge exhaust that goes out to relieve if you were purging containment to exchange air. So when we use that, this would normally be closed. And it's only opened intermittently of power for containment pressurization changes potentially.

In the event that you have a design basis event, these valves are actuated. And we'll talk about that in a minute. They open. And with the

pressure differential, the check valves open under pressure. And these also become by the design containment isolation valves. So we'll look at that. So that was the addition. So, with that in hand, if you would look, I will go through and talk about specifically what the changes were.

We identified a containment over cooling event that required the addition of this system in looking at our design. And, consequently, we added a six-inch vacuum relief-sized system that's shown on the other drawing.

The schematic of these meets the ASME section 3 criteria, NE 771.52, for a vacuum relief device for the containment vessel itself. So it's designed to be consistent with that. And, actually, as I'll show you later, it's similar to the configuration of current plants that have the steel shell containment like we do.

Because it is a containment isolation valve with a specific function, we added a tech spec for this that's equivalent to the standard tech spec 36-12. So it's not fundamentally different.

The arrangement is, as you have seen in the other drawing, two MOV butterfly valves. They're class 1E butterfly valves with an actuation signal to

open a vacuum relief. They also have a dual function to close when we need containment isolation. And they're single failure-proof.

And then the check valves are inside containment. Since these are active valves, they're added to the active valve list, table 39-12. And they have in-service testing appropriate to the active function plus the containment seat leakage requirements for this. So it's no different than any other containment isolation valve.

They do automatically open class 1E batteries. The actuation signal is a low-pressure and containment below the normal operating band, which is an indication that we have a negative pressure forming containment. So they have a safeguards actuation signal that becomes a tech spec 3-32 actuation, safeguards actuation, surveillance.

The arrangement for the I&C is that the vacuum relief has priority over containment isolation. And the way to think about it, they don't really mutually exist because if you had a condition with low decay heat on a cold day, you had an event that had very low decay heat, you wouldn't have any pressurization in containment that you might need with a blackout condition, the flow of air into containment

to equalize pressure.

Eventually when the pressure went up high enough in containment that the release of radioactivity was a challenge, you would have the containment low-pressure signal clear. And then the automatic isolation signal would take precedence and close the valve. So you don't really have a condition where you need both at the same time, just by the process that exists.

So we have the I&C lodging set up to have actuation with priority of isolation because the vessel under-pressurization is a design basis concern in that case.

The design basis event is basically a cold front that overcools. And it can be an existing cold front that's there and we have a reactor trip or we have a plant design basis accident. So that we may need this depending on what conditions are in containment from the event.

The containment vessel design external pressure is now established as -1.7 based on service level A and D conditions. So it changed from the existing condition.

DR. WALLIS: You mean that's the limiting allowable pressure or something?

MR. BROCKHOFF: Yes. Yes, sir.

DR. WALLIS: Yes because --

MR. BROCKHOFF: We have to turn the pressure before it gets onto that negative pressure limit. And our system does --

DR. WALLIS: This is where a new -- you actuate these valves at -1.7 psi, too?

MR. BROCKHOFF: We actuate them at about -.5 or .8. What's this? I forget, but it's a slight negative pressure. And then it turns. The pressure will go down and turn before it gets to the minimum pressure.

DR. WALLIS: That's the minimum that's allowable.

MR. BROCKHOFF: This is a design pressure for the vessel, -1.7.

DR. WALLIS: Okay.

MR. BROCKHOFF: So that replaces a value that was existing in the DCD.

And then we currently have again this same valve arrangement for both CE two-loop designs and Westinghouse two-loop designs and have a steel shelf containment like we do. It's basically a butterfly valve and a check valve series.

And this is single failure-proof. If you

look at the drawing, it's single failure-proof for either one to open here or single failure-proof for either one to open in the other side.

And the last thing is, in looking at this, this was a fairly extensively work change on our end and also extensively reviewed by the staff.

We looked at the transient analysis, which is the chapter 6 analysis. The system design looked at many, many aspects. We put in safety-related valves. They were containment isolation. They needed in-service testing. They were active valves. They needed tech specs associated with them. They needed the actuation circuitry, which is another tech spec.

So we did lots of design aspects. We looked at the sizing to see what size pipe and valve we needed. And we had to really work in conjunction with the assumed safety analysis case of what the transient was.

We had to look at ASME code considerations because this is a protection device for the vessel. And we also had to look at the CV shell design and obviously make sure that we come up with a new -1.7 design basis number.

We looked at --

MEMBER BLEY: You said you don't have to

worry about a conflict between the vacuum breaker and the containment isolation. Physically that makes sense, but what if you get a low containment pressure signal, a false one. Will the ESF override that?

MR. BROCKHOFF: It's a two of four logic.

MEMBER BLEY: Two of four? Okay. So it's as any safeguards actuation signal would be. There's a coincident logic to conclude that.

But, anyway, this is very broadly studied. We basically put together a critical issue resolution team to really look and make sure we broadly touched everything that was needed. And then we had a very extensive staff interface on this. They asked us various questions in each of these areas. And we have gone back. And I think we have closed it to their satisfaction, all the question that we have had.

I actually wanted to show you one backup slide just to give you a sense of this. Typically if we have any safety valve, we typically affect the tier 1 ITAACs, which includes the valve, the lines, the figure, and the criteria acceptance table if there was a difference in the valve from other standard valves.

The tables in tier 2 that are affected, there are equipment classification lists, the seismic equipment lists, active valve lists, in-service

testing, qualification, high-frequency sensitive electrical equipment for the valve and actuator if it has position sensing, containment mechanical penetrations, PANs indication because valve status is there, P and IDs for the affected system, safe shutdown components in chapter 9.

And then this one was a little different. If safety valve has actuation logic, it also affects 7.2, 7.3, manual actuation, and the tech specs. So we really broadly cover this across the DCD and look really extensively at each of these areas.

Let me flip back again. And, apart from those, we also looked at the discussion associated with this change for the transients in chapter 6 and for the information on the containment in chapter 3. So it was very broad.

CHAIRMAN RAY: Go to that last table again, Chuck, the backup slide. Yes. I mean, this illustrates -- you know it already; that's why you put it up there -- how many things are affected by a single change and --

MR. BROCKHOFF: By one valve, one safety valve.

CHAIRMAN RAY: Correct. And that's what makes reviewing amendments in the form of all of those

changes individually so difficult, particularly when you mix them up with another 60 or so changes.

MR. BROCKHOFF: Right.

CHAIRMAN RAY: But, anyway, that's just a gratuitous observation. It's where we started this process. It sort of got bogged down. I think this chapter 23 approach has some obvious advantages from a reviewer's standpoint anyway.

MR. BROCKHOFF: It's a very systematic look. You need to do that with each change, identify all the --

CHAIRMAN RAY: All right. Any questions about the late addition of a vacuum breaker? I can call it that, can't I?

DR. WALLIS: It's a very slow transient, isn't it? It's hours and --

MR. BROCKHOFF: Well, it's about 15 minutes until we actually need it to actuate. It really depends on the temperature you assume. And it also depends on the rate of change of pressure, of temperature in a given hour. So it's, yes, a relatively slow transient compared to the ones you typically think of.

DR. WALLIS: And you looked at the extreme conditions of the outside temperature and all that

sort of thing?

MR. BROCKHOFF: Yes, sir. We looked at down to the -40, which is our limiting chapter 2 condition.

DR. WALLIS: Okay. Thank you.

CHAIRMAN RAY: Yes. I guess one other thing occurs to me, Chuck. And that is that the check valve on the inside needs to open easily.

MR. BROCKHOFF: It has a balancing feature on it.

CHAIRMAN RAY: Right.

MR. BROCKHOFF: This has been used in many plants and about two inches of water gauge, I believe, is the set point.

CHAIRMAN RAY: What I am thinking about is the extent to which it is able to pass the surveillance test in the other direction. I'm sure you've looked at that and thought about it and --

MR. BROCKHOFF: It has to be leak-tight, just like any containment isolation valve must be.

CHAIRMAN RAY: Yes, I know. And because it doesn't have a high seating force by definition, that can be problematic.

MR. BROCKHOFF: Well, it's a six-inch valve. So you get some seating force based on a

differential pressure. At 59 ponds pressure in containment with a six-inch valve, that's a substantial closing force.

CHAIRMAN RAY: I know, but you had better have the seats very carefully --

MR. BROCKHOFF: Yes, sir.

CHAIRMAN RAY: -- lapped or you're not going to get anywhere. I've had it happen. So, anyway, it's painful to go up into mode 2 and have to turn around and go back down again two or three times because you can't get these valves to seat, not these valves but valves like them.

MR. BROCKHOFF: Valve in particular. That's right.

CHAIRMAN RAY: Valve that doesn't have a strong seating force. If there's any problem with the valve fully seating, you can't pass the test. And it can be a problem.

Okay. Thank you.

MR. BROCKHOFF: Yes, sir.

MR. MELTON: Great job.

MR. BROCKHOFF: Thanks.

MR. MELTON: Mark Stella, are you on the phone?

MR. STELLA: Mark Stella is on the phone.

MR. MELTON: Okay. Thank you, Mark. We're getting started on the changes to the containment cooling water system.

Okay. Mr. Chairman, this is Michael Lambert. He's our senior engineer. And he'll make this presentation.

CHAIRMAN RAY: All right. Thank you, Mike.

MR. LAMBERT: Okay. AFSE 23.V. The reason for the change -- go to the next slide. The reason for the change, the external heat exchanger tube leak or rupture results in the discharge of reactor coolant. Go to the reactor coolant pump and then to the containment cooling water system.

There is no isolation of the pump cooling lines to the external heat exchanger pulse. And this will be illustrated on the next slide.

The automatic closure of the CCS containment isolation valves occurred only on a safeguards signal, a signal which is a low pressurizer pressure. The safeguards signal may not have occurred for an extended period, allowing continued leakage of reactor coolant into CCS and out of containment into the turbine building.

The maximum RCS discharge rate was greater

than 100 gallons per minute in a single pump makeup rate of 130 gallons per minute. Protection from the reactor coolant pump heat exchanger tube rupture was only by non-safety SSCs.

CHAIRMAN RAY: Why? Was this just an oversight or what? I mean, was there a different philosophy that somehow came out with a different answer? I'm trying to figure out why this was ever designed the way it was.

MR. LAMBERT: I don't want to misspeak, but I believe that the reactor coolant pump design is new. And in that design being done, this is just something that we came about.

CHAIRMAN RAY: So this inner system failure wasn't possible with the old design?

MR. LAMBERT: It wasn't the same mechanism.

MEMBER BLEY: I'm remembering something when they went back through the reactor coolant pumps. And I'm not --

CHAIRMAN RAY: Yes. Eileen?

MS. McKENNA: I think the addition of the external heat exchanger was a rev. 17 or 16 change before it was internal. So I think that's one of the things that led to this scenario and then maybe -- I

don't know.

I can't speak to whether there was a change in the size of the coolant system, but I think it's the external heat exchanger change that throws post-certification.

CHAIRMAN RAY: Yes. I guess I'm still trying to puzzle over -- I mean, it isn't an idle question. I'm really trying to understand this. Whether it's internal or external to the pump casing, I don't see that that makes any difference in terms of this protection.

Yes? Does somebody want to enlighten us?

MR. STELLA: Yes. This is Mark Stella. I work in the BOP Engineering Group, the same group that Mike works in. Let me see if I can explain this.

The reactor coolant pump is cooled by this external heat exchanger. And it always has been designed to be cooled by an external heat exchanger, the major part of the heat being taken out from the standard cooling water system.

At the time the pump was designed, we didn't really have any good information on the configuration of the external heat exchanger, not knowing the size of the tubes, the number of the tubes, and things of that nature.

Once all of this got defined as the pump design progressed, we started doing the analyses and assumed a single double-ended guillotine break tube failure. Originally we thought that the tubes would be sized so that we would not exceed 100 GPM loss from the reactor coolant system and that would make it not a LOCA by the normal definition. It's the same as having a three-eighths inch orifice in a line connected right to the reactor coolant system.

That allowed us to utilize non-safety manual operator action to isolate this event because there was sufficient time to detect it and to take action manually from control room to isolate the pump before there was a significant release of radiation from the --

CHAIRMAN RAY: All right. Thank you. I got it. Very good. Appreciate it.

MR. MELTON: Thank you, Mark.

CHAIRMAN RAY: Okay. I didn't mean to cut you off, but I do understand now what happened. Thank you.

MR. STELLA: Now, there was one other complicating factor in that as the pump design developed, we found that we needed to protect the pumps against damage by overheating by tripping them

all if there were a loss of cooling water or some other event that caused a high temperature in at least one of the pumps. So to trip all of the pumps, we had to trip the reactor at the same time.

So we had to introduce an automatic reactor trip on high bearing water temperature, which essentially ended up giving us a situation where we had loss of reactor coolant through the CCS outside containment and the reactor trip. So that put us into the new category of event and caused us to have to rethink the entire method for isolating the pumps.

MEMBER ARMIJO: What is the maximum temperature that you allow these coolant pumps to get to?

MR. STELLA: I believe the trip set point is about 185 degrees Fahrenheit right now. That's based on information from the latest series of reactor coolant pump tests. Any time we reach 185 degrees Fahrenheit and it was standard cooling circuit at the location of the bearing water temperature sensors, which is high in the pump, close to the thermal barrier, it will generate a trip --

MEMBER ARMIJO: So that would be the hottest --

MR. STELLA: -- in the reactor coolant

pumps.

MEMBER ARMIJO: That would be the hottest point in the pump?

MR. STELLA: Actually, the hottest point is above the seal. That's the hottest point in the pump that would damage the bearings or cause degradation to the motor windings. So that's why --

MEMBER ARMIJO: Okay. I've got it.

MR. STELLA: -- it's placed there.

CHAIRMAN RAY: All right. Good answer. Thank you.

MR. MELTON: Thanks, Mark.

We're on the next slide.

MR. LAMBERT: This slide is a picture of the reactor coolant pump. Mike, can you zoom in from this top section?

CHAIRMAN RAY: You're going to have to do something. Speak really loud --

MR. LAMBERT: Okay.

CHAIRMAN RAY: -- or turn toward us when you're pointing or something.

MR. LAMBERT: The reason for what this slide is showing is that the cooling circuit where the cooling water comes out of the pump and goes to the heat exchanger and then returns from the heat

exchanger back to the pump, there's no place for isolation valves in that line. That's where we can't isolate it in the event of a tube break. We can't isolate the RCS flow path into the CCS system.

One more point. The bearing temperature sensors are in this area up here. So they are near the hot end of the pump.

This next slide shows the configuration of the CCS lines going into and out of the reactor coolant pump heat exchanger, the cooling circuit. This system is the same for all four pumps. And what this shows is originally this check valve was intended to close to prevent backflow in the event of a tube rupture.

And then we had an automatic isolation valve on the outlet side. It would also close if you had a coincident flow deviation alarm of reduced flow on the inlet and increased flow on the outlet. And it was protected by a non-safety relief valve. So this is still the reason for the change that we are going over.

Next slide. The changes that we made to correct this, the change incorporates automatic isolation of the CCS containment penetrations following a reactor coolant pump external heat

exchanger tube rupture with safety-related SSCs only.

We use a safety-related RCP bearing water high temperature trip signal to produce an isolation signal, which is independent of the S signal. And it provides new safety clash relief valves inside containment near the isolation valves to ensure their operability and continued integrity following the tube break.

These next two slides simply show the changes that we made. If you can see, the relief valve V270 is what was added. And this is the containment, the CCS containment, supply line. So V201 is the containment isolation check valve. And V200 is the containment isolation automatic valve. And the note 7 that was added is the closure of that valve on the high bearing water temperature trip signal. And this next slide shows the same changes made to the containment return line.

V271 is the safety relief valve added. And then you can see note 7 is the closure of the automatic isolation valves V207 and V208.

MEMBER ARMIJO: Let's see. Where is D, the discharge of the relief valve?

MR. LAMBERT: It goes to a drain. So it will eventually go to the containment sump.

MEMBER ARMIJO: Okay.

MR. LAMBERT: Following the changes in the event of an external heat exchanger tube rupture safety class, RCP bearing water temperature sensors produce the reactor trip followed by the trip of all four RCPs. The pump trip signal is used to produce automatic closure of CCS containment isolation valves.

The isolation of the reactor coolant leakage outside containment is accomplished entirely with safety-related SSCs. The high bearing temperature sensors PMS system and safety class isolation valves and safety class relief valves protecting those isolation valves. The high bearing water temperature condition occurs within minutes for an external heat exchanger tube leakage at rates as low as ten gallons per minutes. And the changes will be included in DCD rev. 18.

CHAIRMAN RAY: Any questions?

MEMBER ARMIJO: Yes. Could you go back to slide 3, your drawing? Could you blow that up a little bit?

MR. LAMBERT: This one?

MEMBER ARMIJO: Yes.

MR. LAMBERT: Okay.

MEMBER ARMIJO: Up near the flywheel. Is

that 185-degree temperature max? Is that the actual temperature of the flywheel? It looks like not much cooling up there.

MR. LAMBERT: Yes. The temperature elements are in this area. That's --

MEMBER ARMIJO: It's the bearings you're worried about. So is the flywheel at the same maximum temperature, 185, or not?

MR. LAMBERT: I can't answer that with any certainty.

MR. STELLA: Mike, may I try to answer that?

MR. LAMBERT: Sure.

MR. STELLA: This is Mark Stella again.

The flywheel, the upper part of the flywheel, actually operates at a relatively high temperature, probably in the area of 300 degrees --

MEMBER ARMIJO: That's what I thought.

MR. STELLA: -- because of the conduction through the thermal barrier. The temperature drops off through the flywheel itself. And down below the flywheel, I would say the flow temperature is probably in the 200-degree range. That fluid is mixed. It mixed a chamber with the fluid coming up from the rotor itself, from the standard cavity, in a mixing

chamber.

And in that mixing chamber, there are four RTDs, four sensors arrayed 90 degrees apart to measure the fluid for that mixing chamber. And the temperature, 185 is the Prandtl mixed temperature of the fluid coming down from above and the fluid coming up from the motor.

MEMBER ARMIJO: Yes. Just looking at your drawing, it seems you have a cooling path at the bottom of the flywheel seal can. And so that would be cooler than the top of that seating can that contains the tungsten and the retainer rings. You might have --

MR. STELLA: That is correct.

MEMBER ARMIJO: Okay. So there will be a temperature gradient, but the hottest part might be about 300?

MR. STELLA: Yes. The hottest part is definitely above. And the heat generated up there by friction and coming through the thermal barrier is transferred down along the side of the rotating flywheels through the series of vortices into the lower part of the flywheel, where it mixes and then goes to the heat exchanger.

MEMBER ARMIJO: Okay. Thank you.

CHAIRMAN RAY: Any other questions?

(No response.)

CHAIRMAN RAY: Okay. Now, Eileen, did you want the staff to respond to these, too, or --

MS. McKENNA: Yes. We have a staff presentation on these two changes --

CHAIRMAN RAY: All right.

MS. McKENNA: -- because we thought they were the more significant ones.

CHAIRMAN RAY: Now, all of the changes I note to the members are listed in the -- I guess they are in the status report or --

MR. WANG: The status reports just have all the standards.

CHAIRMAN RAY: Yes.

MR. WANG: All the detail of these questions are being SER.

CHAIRMAN RAY: But by name, they are listed in the status report, yes.

MR. ANDERSON: Mr. Chairman, we're continuing on slide 13 of the slide packet that was previously handed out. I'm Brian Anderson, Project Manager in New Reactor Licensing. I've got some of the technical staff, who have done a good job of plotting this table up here, some of the technical

staff that were involved in the review of this design change. We're going to start in talking with the vacuum relief system and then talk about changes to the thermal cooling water system after that.

To my left is Michelle Hayes. She is a technical reviewer in the Containment Systems Branch. To my right are Anne-Marie Grady, Jack Zhao, and Jim Strnisha. Anne-Marie is a technical reviewer in the Containment Systems Branch. Jack is a technical reviewer in the Instrumentation and Controls Branch. And Jim is a technical reviewer in the Component Integrity Performance and Testing Branch. We also have other reviewers in the audience available if questions come up.

CHAIRMAN RAY: Do we have a good acronym for that last branch?

MR. ANDERSON: CIB is the acronym. I was looking at it but trying to remember what it actually stood for. I think the next slide was already covered in the Westinghouse presentation, the proposed changes to add a vacuum relief system. They result in a reduction of the containment external pressure design limit and also add a new technical specification: 3.6.10.

This one is very familiar. It was also

used in the Westinghouse presentation. I won't talk too much to it, but, as was previously stated, use of an existing system line penetration for the containment air filtration system is utilized to motor-operated butterfly valves in parallel lines outside of reactor containment and two check valves located in parallel lines inside the containment.

MEMBER BROWN: The sheet that he gave us last time said the external pressures is determined to be -1.7. You said 1.7 is the -- did I misunderstand the sign?

MR. BROCKHOFF: Psid. And I have -1 psid.

MEMBER BROWN: Oh, I'm sorry. That says psig. Thank you.

MR. BROCKHOFF: Chuck Brockhoff, Westinghouse.

CHAIRMAN RAY: Okay. Thanks.

By the way, could you tell us, just roughly, where do we have vacuum breakers installed now?

PARTICIPANT: Operating.

CHAIRMAN RAY: The operating plants, yes.

MS. GRADY: Waterford for one.

CHAIRMAN RAY: Waterford?

MS. GRADY: Yes.

CHAIRMAN RAY: Okay.

MS. GRADY: And there are others because I looked.

MEMBER BROWN: Chuck mentioned some, I think.

MR. BROCKHOFF: Chuck Brockhoff, Westinghouse.

Prairie Island and St. Lucie, sir, both units at both sites.

CHAIRMAN RAY: All right. And does that exhaust the list, Chuck?

MR. BROCKHOFF: I only checked for the ones that were Westinghouse-related, sir.

CHAIRMAN RAY: Okay. Well, basically because I am not that familiar with all the range of plants that we have available, I just wondered how common it was to have a vacuum breaker.

MR. BROCKHOFF: Plants with steel containments is really the design, the containment design.

CHAIRMAN RAY: But one would think of BWRs in that context, Chuck.

MEMBER SHACK: BWRs have vacuum breakers.

CHAIRMAN RAY: Well, that's what I was trying --

MEMBER SHACK: Yes.

CHAIRMAN RAY: Do they all have them, Bill? Well, this is not --

MEMBER SHACK: It would be like Davis-Besse, which is a steel containment but isn't in your survey.

MR. BROCKHOFF: Yes. Yes, sir. This is Chuck Brockhoff with Westinghouse. Yes, sir, that's correct.

CHAIRMAN RAY: Okay. So we're not looking at something that is limited just to Waterford or something?

MS. GRADY: No, it is not.

CHAIRMAN RAY: Okay. Yes. Go ahead, please.

MR. ANDERSON: Slide 16 highlights the categorization of the staff's review of the proposed design changes. You saw on the Westinghouse slides, in their presentation, that there were numerous DCD sections that were affected by these proposed design changes. So as part of the staff's review and as it's structured in the safety evaluation report, these proposed design changes included system design and analyses, containment isolation leak rate testing, design qualification and testing, instrumentation and

control, and technical specifications. And those are the different subsections that are listed and described in the safety evaluation report.

MS. HAYES: Westinghouse provides that NRC approved WGOTHIC model to incorporate the vacuum relief system and to replace some of the extreme conservatisms with more realistic but still bounding assumptions regarding the temperature differential across the shelf, the initial relative humidity in containment, and the heat loads from a shutdown reactor.

Westinghouse used the revised WGOTHIC model to demonstrate the vacuum relief system is able to maintain the containment pressure within the design value of -1.7 psig. We go back and forth. Sometimes we say -1.7. Sometimes we say external factor of 1.7 just to throw you off.

MEMBER BROWN: That's good.

MS. HAYES: During loss of a/c power event on a cold day, which was the same limiting transient they had in rev. 15, Westinghouse then ran sensitivity studies for other scenarios to demonstrate that this case was still the bounding scenario.

The staff reviewed the analysis assumptions, including the basis for removing

unnecessary conservatisms, and agreed they were justified. The staff audited before calculation notes supporting the analysis and found the assumptions were conservative and the temperatures correctly incorporated into the WGOTHIC model. The staff also ran confirmatory analysis with the contain model. The results were consistent with the Westinghouse evaluation.

Next slide. The staff concluded that the analysis was compliant with GDC 16 because it conforms to the acceptance criteria.

DR. WALLIS: What is the most severe transient? What is the most severe transient?

MS. HAYES: Loss of power on a cold day.

DR. WALLIS: How cold is the cold day?

MS. HAYES: The cold day starts at 25 and drops 30 degrees an hour until it hits --

DR. WALLIS: What happens to the barometric pressure?

MS. HAYES: -- 40.

DR. WALLIS: What happens to the barometric pressure? Does that change, too?

MS. HAYES: No. That maintains the same barometric pressure.

DR. WALLIS: Barometric pressure can

change from 29 to 30. That's psi. And that's significant in the 1.7 psi. So it seems to me they should consider not just temperature but also the barometric pressure temperature. Can they do that?

MS. HAYES: I know the barometric they're not considering.

DR. WALLIS: No. It could be just as important to --

MS. HAYES: I'm thinking about --

DR. WALLIS: No. It could be just as important as the temperature change.

MS. HAYES: I understand. And I know that there are some RAIs on that.

DR. WALLIS: Are there some RAIs on that?

MS. HAYES: I'm thinking about what the response was.

DR. WALLIS: I was surprised they only mentioned temperature because barometric pressure can change.

MS. HAYES: Right. I mean, this resulted from a question saying, "What if there is a storm front coming and there are changes in the atmosphere?" And I'm going to have to get back to you. I don't recall right now.

CHAIRMAN RAY: That's all right. We can

get your response later as you don't recall.

MS. HAYES: Okay.

DR. WALLIS: So what is the most severe transient that was analyzed or is it still being questioned whether it was the most severe?

MS. HAYES: Oh, I'm comfortable with the most severe transient that was analyzed.

DR. WALLIS: Most severe? Okay.

MS. HAYES: Yes. Yes.

MS. GRADY: I reviewed the containment isolation and leak rate testing aspects of the change since these valves are now containment isolation valves.

A vacuum relief design has two flow paths, which connect directly with the containment atmosphere and penetrate the primary containment. This design complies with the requirements of GDC 56 by providing each vacuum relief device with a check valve inside containment and a motor-operated butterfly valve outside containment.

This design complies with 10 CFR 50.34f(2)(14)(b) redundancy requirement. If a check valve failed to close during an accident, the MOV and series with it would close on the "T" signal providing containment isolation.

On the basis of the review of containment isolation design of the closed vacuum relief design, the staff concludes if the design complies with the acceptance criteria of 624 of the SRP, including 10 CFR 50.34f(2)(14) additional TMI requirements --

DR. WALLIS: All these check valves are outside containment atmospheric temperature? I mean, I don't know if the butterfly valves are outside containment.

CHAIRMAN RAY: Check valves are inside.

MS. GRADY: The check valves are inside.

DR. WALLIS: I mean, the butterfly valves are outside at atmospheric conditions. And it's a cold day.

MS. GRADY: No. They're --

DR. WALLIS: Yes. They're outside.

MS. GRADY: They're at atmospheric conditions, but they're not -- and they're outside containment. That's right.

DR. WALLIS: What if you have freezing rain?

MS. GRADY: They're not out --

DR. WALLIS: Does it clog up these butterfly valves?

MS. GRADY: They're not outdoors.

DR. WALLIS: They're not outdoors?

MS. GRADY: They're outside the containment.

DR. WALLIS: But they're --

MS. GRADY: They're in a --

DR. WALLIS: -- protected from the weather. So you don't --

MS. GRADY: They're protected from the weather.

DR. WALLIS: -- get moisture in there which can freeze up --

MS. GRADY: I'm hesitating --

DR. WALLIS: -- on a very cold day here?

MS. GRADY: I'm hesitating because I can't identify for you at this moment the room they're found in, but they are --

DR. WALLIS: But they are protected against freezing problems, moisture freezing in them?

MS. GRADY: Yes, they are.

DR. WALLIS: This could be a problem.

MS. GRADY: Yes, they are.

DR. WALLIS: They are?

MS. GRADY: Yes.

DR. WALLIS: And you're satisfied that's good enough?

MS. GRADY: Yes.

DR. WALLIS: Good.

CHAIRMAN RAY: Okay. It's all right. Continue. That's a good answer. That's fine. Just say "Yes" if it's yes and go on.

DR. WALLIS: How did you get satisfied that it's good enough?

MS. GRADY: They're inside.

DR. WALLIS: Inside?

MS. GRADY: Yes. They're in an equipment room, which --

DR. WALLIS: Which is kept above freezing?

MS. GRADY: Certainly.

DR. WALLIS: Thank you. So the air that's coming in is very cold, isn't it? The air that goes through is very cold? They're bringing in -4 degrees air.

MS. GRADY: Yes.

MR. McKIRGAN: Mr. Chairman, John McKirgan again for the staff.

Anne-Marie, correct me if I am wrong, but these valves would also be subject to equipment qualification requirements.

MS. GRADY: Absolutely.

MR. McKIRGAN: And that would include the

environmental conditions?

MS. GRADY: Yes.

DR. WALLIS: That would include all the environmental conditions?

MS. GRADY: Absolutely.

DR. WALLIS: And that will cover what I am talking about?

MS. GRADY: Yes. These containment isolation valves also meet the requirements that apply to them based on the Containment Systems Branch technical position 6-4, which has guidance for containment purging during normal plant operation or other valves that fall into that category.

On the basis of the review, the staff concludes the proposed addition of the vacuum relief valves to the already certified AP1000 containment leakage rate testing program complies with the acceptance criteria of 6-26 of the SRP.

CHAIRMAN RAY: All right.

MR. STRNISHA: Valve design qualification at IST testing. It just adds two motor-operated butterfly valves and two vacuum relief check valves for the designs. The designs of both valves meet the ASME boiler pressure vessel code section 3.

The butterfly valves are six-inch with

offset discs, motor-operated from separate class 1E battery sources and capacity coefficient and stroke time for full flow capacity. The check valves are six-inch horizontally installed swing check valves with soft seats, open at a preset differential air pressure of .2 psid for vacuum relief function. The valve has a mechanical exerciser with a balancing device for the set pressure. And it's low capacity-tested.

For qualification, the butterfly valves and the check valves are qualified in accordance with QME-1-2007. The check valves, which also function as vacuum relief valves, will satisfy ASME code NC7000 for over-pressure protection.

NRC audited the valve design specs at Westinghouse in September and October and found them to be acceptable in-service testing.

For the butterfly valves, in-service testing will include remote position indication and exercise every two years containment isolation leak tests, exercise full stroke quarterly, and an MOV operability test.

IST for the check valves will include containment isolation leak tests, exercise full stroke in both directions every refueling shutdown, and a

vacuum relief test every two years in accordance with the O&M Code appendix 1.

And for ITAC, the DCD tier 1, section 2.2.1 containment system table was revised to include the butterfly valves and the check valves. And there is an existing ITAC for components in this table for design and construction.

Table 2.2.1.3 for the containment system ITAC will be revised to specify the butterfly valve closing time. And table 2.7.6.2 ITAC for the ventilation system will be revised to include the opening time for the butterfly valve.

And the conclusions are design and qualification for the butterfly and check valves will meet the boiler pressure vessel code in QME 1, the IST activities will meet 10 CFR 50.55a and the O&M code. And, based on the review, staff finds the design qualification and testing of the valves to be acceptable.

CHAIRMAN RAY: Any questions?

(No response.)

CHAIRMAN RAY: Thank you.

We'll do CCS now.

MR. ANDERSON: We still have a couple of more slides for vacuum relief.

CHAIRMAN RAY: Oh, we do? Okay. Sorry.

MEMBER BROWN: Can I ask an educational question? What is the critical weakness that dictates the differential pressure the containment is good for?

CHAIRMAN RAY: The big --

MEMBER BROWN: No. I understand that, but what is -- I mean, I'm just relating back. I've got submarines that go down --

(Laughter.)

CHAIRMAN RAY: It's over-stressing the pressure vessel due to external pressure.

MEMBER BLEY: It's built for inside-out pressure. It's not built to take outside in.

CHAIRMAN RAY: Unlike a submarine.

MEMBER BROWN: Well, they'll handle a fair amount the other way also.

MEMBER BLEY: Think of a boot camp.

MEMBER BROWN: No. I understand. So it's strictly the external questioning at inwards? It's not as sturdy as it is --

CHAIRMAN RAY: "Crushing" isn't quite the right word, but --

MEMBER BROWN: Okay. Buckling. All right. Thank you very much.

MEMBER SHACK: It won't deform

plastically.

MEMBER BROWN: So internally you're saying we can pressurize it pretty well, but externally it can't handle the same strokes.

MEMBER BLEY: Your boat has some strength numbers in there, too.

CHAIRMAN RAY: Let's go ahead and finish up this section here.

MEMBER BROWN: That's fine. You answered my question. Thank you.

MR. ZHAO: I'm Jack Zhao in the I&C Branch. I would like to present the evaluation and the I&C changes related to this as a new vacuum break system.

Applicant proposed to include a new and functioning control in the PMS for the two new vacuum break walls. And the Westinghouse also included the manual control. And the wall was a status indication in the control room.

There are no changes to the AP1000 I&C architectures.

MEMBER BROWN: Yes. I guess maybe Westinghouse can, maybe you can answer this. Does this mean a new control module in terms of application code or is this going to be integrated into the

existing application for ESF functions? Is my question clear or not clear? Oh, there you are.

MR. BROCKHOFF: Chuck Brockhoff, Westinghouse.

We will put another channel in that will be a sensor from the containment pressure. And it will take that output of that channel and use it to close these. So it's basically a logic circuit.

MEMBER BROWN: I understand you've got to have a sensor, but it's going to the same -- how many divisions?

MR. BROCKHOFF: Four divisions.

MEMBER BROWN: Four divisions?

MR. BROCKHOFF: Yes, sir.

MEMBER BROWN: So you're going to go into the same chain for each division?

MR. BROCKHOFF: Yes, sir.

MEMBER BROWN: So the application code will have to be upgraded to handle this kind of -- you have to have software in order to do this? So it's more processing time.

MR. BROCKHOFF: It will take additional channels to process the logic for that. Yes, sir.

MEMBER BROWN: It's not channels. They're all still in the same division. So it's not more

channels. It's more software.

MR. BROCKHOFF: Yes, sir.

MEMBER BROWN: So you're going to eat up more processing time.

MR. ZHAO: Not too many, just --

MEMBER BROWN: I understand that. It would be easier to run the test. I got that. It's just an example, just an example. It would be easier to run the test that I would like to see. So now you will have more stuff. You will want to take out --

MEMBER ARMIJO: You want to add more stuff in there.

MR. ZHAO: Yes, a few more inputs, a few more outputs.

MEMBER BROWN: Okay. I just want to make sure it will be a separate setup and you were going to go through the existing PMS system, how it was going to be done. You have answered the question. Thank you.

MR. ZHAO: Okay. So after the staff concludes, then, the proposed I&C changes comply with the requirements in the GDC 13, 19, 20, and 21.

Next, please. For the changes to the tech spec, applicants include in the low tier the containment pressure trip function to the tech spec

table, 3.3.2-1, for the vacuum break valves. Applicant also included the tech spec in your tech specs for the control of the vacuum breaker valves.

MEMBER BROWN: Let me back up and ask another question. This is an SFAS system? Is this considered a safeguards?

MR. ZHAO: Yes.

MEMBER BROWN: Not a reactor trip obviously?

MR. ZHAO: Yes.

MEMBER BROWN: So that means this now falls under the two out of two?

MR. ZHAO: No. That is not under DAS. This is two out of four.

MEMBER BROWN: Oh, okay. All right.

MR. ZHAO: Yes.

MEMBER BROWN: Oh, that's DAS. Okay. Excuse me.

MR. ZHAO: Yes. That's DAS.

MEMBER BROWN: Thank you. I'm sorry. I'm just --

MR. ZHAO: Westinghouse revised the tech spec 3.6.4 and tech spec 3.6.5 to new tech spec 3.6.10. On the basis of the review, the staff concludes the tech spec is accurately addressed.

CHAIRMAN RAY: Okay.

MR. ZHAO: That concludes my presentation.

CHAIRMAN RAY: Thank you.

MR. ANDERSON: That concludes the staff's presentation for vacuum relief. We would like to change a couple of people up front before starting the --

MEMBER BROWN: Since you brought up DAS and I got it wrong, is this function going to be incorporated into the DAS also?

MR. ZHAO: No.

MEMBER BROWN: So there's no driving force that needs to be --

MR. ZHAO: This is no change to the DAS.

MEMBER BROWN: Okay. No change. Thank you.

MR. ZHAO: Because it will change it. Yes.

CHAIRMAN RAY: Okay.

MR. ANDERSON: And joining me at the table is Larry Wheeler. Larry is a technical reviewer in the Balance of Plant Branch. Jack Zhao and Anne-Marie Grady are still seated here with me.

This introduction slide highlights a lot of what Westinghouse spoke of earlier. Design changes

for the component cooling water system include modifications to the system piping, changes to the closure logic for containment isolation valve, including the addition of tech specs functions and also modifies the reactor coolant pump heat exchanger outlet isolation valve closure module.

MR. WHEELER: Next slide. Modifications to the CCS pipe, the additions of two four-by-six-inch ASIV safety class relief valves on the ten-inch or component cooling supply return lines just inside the innermost containment isolation valves, the change to the piping, safety class, between the innermost containment isolation valves and the appendix J test valves from non-safety, non-seismic to ASME section 3, class 3 to ensure that the relief valves are installed as ASME safety class piping.

MR. ZHAO: Okay. Again next I will talk about the I&C changes and the evaluation of the I&C changes. Basically you mentioned this to the I&C system. The first one is the modification to the closure logic for the containment isolation valves.

The modification includes additional closing logic and the generation of the RCP bearing water high temperature. This, you know, the RCP bearing water high temperature, is also included in

the tech spec table, 3.3.2-1.

This additional corrosion logic is derived from two out of the four logic of the high RCP bearing water temperature in those RCP. This additional corrosion logic is implemented in the safety-related PMAs.

Next, please. The second mentioned is the modification to the RCP heat exchanger outlet isolation valves. The applicant removed automatic closing logic for this outlet isolation valve. Also, the manual control from the main control room is returned for outside in the isolation valves.

These are high delta and flow inlet and outlet flows, which will generate a deviation alarm. This alarm indicates in RCS leaking conditions. So as operators, operators could close in outside isolation valves for each RCP.

There's flow and the outside isolation valves are non-safety-related. So, again, there is no modification to the AP1000 I&C architecture.

So that's all the I&C changes.

MS. GRADY: As far as the changes to the containment isolation valves, the CCS piping is adequately protected from over-pressurization due to a postulated electrical and pump external heat exchanger

tube rupture.

There are two, ASME three, class 3 relief valves: one on the inlet, one on the outlet of the cooling water. Both relief valves would see the over-pressurization event. And the relief valves limit the CCS pressure to approximately 200 psig, which is the set pressure of the relief valve.

Containment isolation valves close on sensed RCP high bearing water temperature. The staff did a confirmatory RELAP analysis. Westinghouse did a RELAP analysis aided with a consultant. And we did a confirmatory RELAP analysis on the isolation valve closure time to make sure that the piping classification between the containment isolation valves would be protected and within the piping classification of 300 degrees F., 230 psig, which are the piping classes. Containment isolation valve closure occurs within a few minutes with RCS in the area of 200 degrees F.

During a postulated reactor coolant pump heat exchanger tube rupture, the proposed design change metes all the applicable NRC regulations. It does not adversely affect safety-related systems, structures, and components. It will still perform defense-in-depth and RTNSS functions.

Tech specs are adequately addressed. The change provides a new containment isolation signal to the already existing component cooling water isolation valves.

The over-pressure protection maintains containment integrity. And it prevents an intra-system LOCA.

DR. WALLIS: RCS means containment, not cooling systems?

MS. GRADY: I'm sorry?

DR. WALLIS: When you say, "RCS," do you mean containment or do you mean cooling or what does RCS mean to you?

CHAIRMAN RAY: Reactor cooling system.

MS. GRADY: Reactor cooling system.

DR. WALLIS: It goes to 200 degrees F.?

MS. GRADY: No. CCS. Did I misspeak?

DR. WALLIS: There's RCS at 200 degrees F. I wonder how RCS gets to 200 degrees F.

MS. GRADY: It's CCS. Sorry.

DR. WALLIS: CCS. Okay.

MR. CHAPMAN: This is Travis Chapman from the Technical Specifications Group.

Anne-Marie, actually, that is correct. One of the issues that came up when we reviewed this

was whether with Westinghouse, whether this was applicable in modes 1 and 2 only or modes 1 through 4. An issue with -- if you are mode 3 or 4, you may be at a lower temperature but still be high pressure. So if you had that postulated to break, you could still have an inner system LOCA potentially. The temperature would be lower, but the coolant would still be going out of the RCS into the CCS.

So the issue that we wanted to address was at lower temperature RCS cooling in the heat exchanger near 200 degrees, would you still get the isolation signal in time to isolate the CCS components, isolate the rest of the system. And they also proved that it does work.

DR. WALLIS: So this should be RCS, which is actually in the coolant system in the heat exchanger.

MR. CHAPMAN: In modes 3 or 4, the RCS that is in the pump might be at a cooler temperature --

DR. WALLIS: Okay. I just didn't --

MR. CHAPMAN: -- but still higher temperature.

DR. WALLIS: -- know it was in those modes. Okay. Thanks. Thanks.

MR. ANDERSON: And that concludes the staff's presentation for these --

MR. McKIRGAN: Mr. Chairman? Pardon. Mr. Chairman, in the spirit of not trying to create new open items, I wondered if the staff could come back and potentially address Dr. Wallis' question about the pressure change during the transient with the vacuum relief.

CHAIRMAN RAY: Oh, yes. The barometric pressure?

MR. McKIRGAN: Yes.

CHAIRMAN RAY: Yes, of course.

MR. McKIRGAN: Perhaps I might ask Ms. Hayes to step back up? I think we want to make sure we understand Dr. Wallis' question.

DR. WALLIS: Would you read my question back to me?

(Laughter.)

CHAIRMAN RAY: The question was, have they considered as a worst case a change in the barometric pressure?

DR. WALLIS: It was the change in barometric temperature, if both of them --

CHAIRMAN RAY: Yes.

MS. HAYES: Right. And I believe that's

inherently considered because the valve goes off at a delta P. It doesn't matter.

DR. WALLIS: No. The load on the containment, the actual -- the problem to be solved is that the pressure on the containment goes down. And it goes down for two reasons. It's cooled. And it goes down relative to the atmosphere. If the atmosphere goes up, then the pressure.

So you've got two things. You've got the barometric pressure change and the temperature change.

MS. HAYES: So the barometric --

DR. WALLIS: The only thing Westinghouse mentioned was the temperature change.

MS. HAYES: Right. That's what they considered, but the --

DR. WALLIS: No. It's Wisconsin and the other --

CHAIRMAN RAY: Wait, wait, wait. Let her finish what she wanted to say.

DR. WALLIS: Okay.

MS. HAYES: The valve actuates on a delta P set point. It's a --

DR. WALLIS: Yes, but it's capacity. The capacity of the system has to do with the worst case, right? You said the worst case was --

MS. HAYES: Delta P.

DR. WALLIS: Worst case to me is one where you've got this sudden chilling, which drops the pressure inside the containment simultaneous with a high barometric pressure outside, which often goes with very cold --

CHAIRMAN RAY: He's not talking about the actuation. He's talking about the capacity. So you've got two things that need to be adjusted. One is an increase in barometric pressure, and the other is a simultaneous decline in internal pressure.

DR. WALLIS: Are the pipes big enough to take that situation?

CHAIRMAN RAY: I'm trying to --

DR. WALLIS: Okay.

CHAIRMAN RAY: -- restate it is all I'm trying --

DR. WALLIS: I wondered if it was understood. I thought you understood what I said.

MS. HAYES: Apparently I didn't.

CHAIRMAN RAY: Wait a minute. Okay. So you size it because of the reduction in internal pressure due to temperature change. Do we have that?

MR. McKIRGAN: Yes.

CHAIRMAN RAY: We're not even sure if we

have that. Okay.

MS. HAYES: I personally didn't size it, but I reviewed the analysis and --

CHAIRMAN RAY: All right. Let me not direct the question to you. Let me just direct it to the room. The concern is that there are two things that can cause a differential pressure. And the question is, is the sizing sufficient to deal with a simultaneous existence of both of them?

It's not a question of actuating the system. It's a question of the sizing of the line. That's --

MS. HAYES: I still want to say yes.

CHAIRMAN RAY: Okay. That's fine. That's all right. So we don't know the answer, and that's enough.

DR. WALLIS: You reviewed it. And you said the worst condition was satisfied or something.

CHAIRMAN RAY: I know. But now we understand that it doesn't include a simultaneous change in barometric pressure I gather.

DR. WALLIS: Have you asked Westinghouse if they have that?

CHAIRMAN RAY: In due course. Okay.

Anything else you want?

MR. McKIRGAN: No. Thank you, Mr. Chairman.

CHAIRMAN RAY: All right. That's it, Brian?

MR. ANDERSON: That is it.

CHAIRMAN RAY: All right. Would you stay there for just a second? Let me see if I can get the -- it's 20 minutes to 3:00. We're going to take a break. And then we're going to talk about trying to get closure by the end of the full Committee meeting in December.

But before we do that, is there anything else you want to present, Eileen?

MS. McKENNA: No. We really just left time in case there were questions by the --

CHAIRMAN RAY: There will be questions for sure.

MS. McKENNA: I meant on the other chapter 23 changes.

CHAIRMAN RAY: Oh, okay.

MS. McKENNA: But if there are specific questions in that time period --

CHAIRMAN RAY: All right. That's what I am going to address myself to right now.

MS. McKENNA: -- whatever else you want to

use it for.

CHAIRMAN RAY: And so I want to -- because I know how busy the members are, I am going to just recite what the other changes are or all of the changes, including those that we have heard. And I'll make some comments on a couple of them to see if they trigger anything.

Anyway, they're listed in material that you have. They involve the component cooling water system changes -- we've heard about those -- changes to the ancillary diesel generator system; changes to potable water system; changes to reactor coolant pressure boundary leakage detection; changes to spent fuel pool flood-up valve remote position indication; changes to AP1000 steam generator thermal hydraulic data report; changes related to the implementation of P17 for rod withdrawal prohibit; changes related to post-design basis accident transmitters; changes to start-up feedwater system and chemical environ. control system logic; changes to passive core cooling system injection lines -- now, there is a phrase that we have touched on earlier today, isn't it? -- changes to squid valve actuation time; changes related to anticipatory reactor trip in the event of an inadvertent passive residual heat removal actuation --

that's an interesting one -- changes to reactor and turbine trips from logic of diverse actuation system; changes to steam generator instrument piping; changes to the steel containment vessel girder and puller crane rail clip; changes to reactor vessel support system -- we heard some about that -- changes to the main control room emergency habitability system; changes to the main steam isolation valve subcompartment; changes to the component cooling water system, in addition to the ones we talked about; and changes to add a vacuum relief system containment, which we just talked about.

Now, I went over those quickly, but I wanted to make sure that the Subcommittee knew all of the changes and I wanted to note that they deal with quite a number of things, including the passive core cooling system injection lines.

What is that about, Ed?

MR. CUMMINS: Excuse me?

CHAIRMAN RAY: What are the changes to the passive core cooling system injection lines about?

MR. CUMMINS: I think we talked about this in another meeting --

CHAIRMAN RAY: Okay.

MR. CUMMINS: -- related to the gas

entrainment. We have the accumulator line injecting into the DVI line below the connection of the IRWST. And it was, at least theoretically, possible that the line from the high point from the IRWST injection could fill with gas.

And then there would be some additional head required in the pressurization before injection would occur. And so we changed the location of where the accumulator injects to a higher point on the DVI line so that it would not possibly fill the injection line from the IRWST with gas.

CHAIRMAN RAY: Thank you. That is well-stated.

And, lastly, what are the changes to the passive containment cooling system? This is 23S.

MS. McKENNA: That's the one that we've discussed: the air vents and the spent --

CHAIRMAN RAY: We're talking about the air vents there?

MS. McKENNA: Yes, yes.

CHAIRMAN RAY: Okay. All right. Well, I was wanting to be sure that it wasn't something other or different from the air vents, but if it's the air vents we're talking about, that's fine. Okay. Thank you.

All right. We're going to take a break. And then we'll finish the day. And I hope I can keep everybody engaged because this is our last chance to define a pathway to closure here.

MR. CUMMINS: Mr. Chairman?

CHAIRMAN RAY: Yes?

MR. CUMMINS: With that in mind, we have responses to a couple of questions that Dr. Banerjee had with regard to the paper and the fiber. If we could have a few minutes after the break, I think we might be able to address those issues as well.

CHAIRMAN RAY: Well, I'm sure Sanjoy would appreciate that. But I will then ask everybody to be back promptly, please, at not later than 3:00 o'clock.

(Whereupon, the foregoing matter went off the record at 2:45 p.m. and went back on the record at 3:00 p.m.)

CHAIRMAN RAY: It's 3:00 o'clock on Friday afternoon before Thanksgiving week. So let's all focus here. Mr. Schulz is going to try again.

MR. SCHULZ: Third time's the charm.

CHAIRMAN RAY: So you have our attention, including that of Dr. Banerjee.

MR. SCHULZ: Okay. Thank you.

Cesare Frepoli is on the phone. And I

think he has -- we relayed to him Dr. Banerjee's questions or concerns. Cesare, could you please speak to those concerns?

MR. FREPOLI: Yes. This is Cesare Frepoli, Westinghouse.

If I understood correctly the question that Dr. Banerjee was referring to, figure 6 of the paper, which shows trends of the correlation with the flow, together with the correlation, I kind of went back to look at the number.

And basically where we are in the business venue, the most severe case, which is the new 2, where we have 41 pounds a second --

MEMBER BANERJEE: Cesare, can I just make sure that you understood, the question was conveyed to you so that you understood the concern? Yes, it is related to figure 6 and those 2 equations, 13 and 14, but the concern was as follows, that the dotted line which is the prediction of the CHF at the lower mass flows did not change very much.

And what that sort of triggered in us is the whole sort of issue, then, as to whether you could use at all a correlation something like the one in 13 and 14 because it just doesn't make too much physical sense. And that is where we are.

So we are even asking whether you can apply something like Chang in this case if it doesn't show any effect. If it doesn't show any effect, then I think it flies somewhat in the face of physical reality.

MR. FREPOLI: Okay.

MEMBER BANERJEE: So that is a much wider question, actually.

MR. FREPOLI: I understand better now. My understanding was that the correlation was constructed in two terms, where basically the first term, which is dependent on the flow, is essentially showing the intersection in those with G close to zero.

MEMBER BANERJEE: Right.

MR. FREPOLI: I did confirm that where we are with the 41 pounds a second to respond is to about five kilograms a square meter per second. And that translates in a QC check far. Then if you convert that back to a QC check, that for the costs on terms, the one independent on the flow rate is 17 kilograms a square meter.

And the heat, the maximum heat, flux we have in the core at that time is 14 kilograms a square meter. So that's why we don't see much of a dependency.

But now if you are challenging the applicability of the correlation, that may be a different question.

MEMBER BANERJEE: Well, what is concerning us I'll tell you is it started, of course, with the fact that at a 41-pound mass per second, you are getting virtually the same curve as you got at 60 or something like that if you look back at case 10.

Now, if it is that close to the intercept, you still have a g effect, even if it is close to the intercept. But I didn't realize it was that close to the intercept. So you're saying that it is only about five -- it is five kilograms per meter squared second based on the flow area?

MR. FREPOLI: Yes because you have a 41-pound a second. The core flow area is 41.5 feet a second. That gives you one pound/feet square a second. And then you convert in lesser units.

MEMBER BANERJEE: It's about five kilos per, yes. Okay.

MR. FREPOLI: It's about five kilograms per square meter second. So you really are down at the -- these intersect. And so the first portion is really the dominant factor. It's the one --

MEMBER BANERJEE: So the flooding -- okay.

So I see where it is coming from now, why it is so insensitive. But, still, even at that very low g, I think we don't know the magnitude of the first tern and 13 compared to the second term. The second term goes as g1.45, right, in equation 15?

MR. FREPOLI: Yes. There is a high flow and a low flow behavior.

MEMBER BANERJEE: Right.

MR. FREPOLI: The high flow was 1.6, and the other was 0.75.

MEMBER BANERJEE: Well, the low flow is 1.45 in what I have. And the high flow is .77, the g behavior. Now, those two terms, what we don't know, of course, is Q*CSCCF, but --

MR. FREPOLI: Q*C chapter coming out from my calculations is the first portion.

MEMBER BANERJEE: Right.

MR. FREPOLI: The QCSHR is the same cost for both. It's 0.019. Well, it doesn't have much there because we need to know the other contribution. And, unfortunately, I don't have my map up right now.

MEMBER BANERJEE: Right. So there are two concerns here. One is, of course, the effect on g and whether your codes and whether this is really applicable because this is for sort of a tube. And

the second is, how are you getting your L by D there because this has an L by D ratio in there as well, right?

MR. FREPOLI: Yes.

MEMBER BANERJEE: So, I mean, what is L by D being defined? I mean, this is an experiment which is done in annuli and tubes and being applied in this situation. I don't think anybody has ever validated these correlations at these low flows. At least I don't know whether COBRA/TRAC has ever been validated against these extremely low flows you are talking about.

MR. FREPOLI: That is the reason that this correlation -- first of all, this correlation is not implemented in COBRA/TRAC, as mentioned yesterday. We also went through kind of a screening on all of those correlations that are applicable to low flow and low pressure. This actually is the one that seems to be the most penalizing as far as the dependency on the flow as you approach the no-flow situation.

There were other correlations that we were considering, like the -- I don't have the list in front of me, but we explore two correlations that were not as severe as the TRAC correlation.

MEMBER BANERJEE: Well, they say --

MR. FREPOLI: To go back to your question about the L over D, here is the L over D through the heated line. So it becomes at this point the link to get to the C checkpoint.

MEMBER BANERJEE: But usually L by D gives you a boiling length or some sort of an effect like that, but when you've got a non-uniform heat flux, but, even leaving that aside, let's assume that this is your heated length. Shouldn't you have more of a g dependence if you look at the --

DR. WALLIS: Five is here.

MEMBER BANERJEE: Well, it's hard to know because it's so close to the intersect, I guess.

MR. FREPOLI: Well, I think that you get to the intersect essentially saying now you are in a column of water where you have the chucking up and down of the liquid and you are going to be going through CHF if you exceed the CCF valve, essentially the physics. That was my interpretation of this, the first.

MEMBER BANERJEE: Yes, provided you are throwing the water out, right? And then it's coming back down? Well, let us think about this a little, but I think it has been helpful to hear that the g was that low, which is that we didn't know that, yes.

MR. FREPOLI: Thank you. The g is five kilograms per square meter second.

MEMBER BANERJEE: Yes. So that probably is the reason why it's showing that insensitivity to g. Okay.

Thank you, though. We can move off this subject.

MR. SCHULZ: Thank you. Thank you, Cesare.

6. CHAPTER 23 VACUUM AND CCS ITEMS

MR. SCHULZ: I have Dr. Banerjee expressed a desire to have us list the experimental exponent in this table. Well, we had provided this table this morning, but we had not included the b exponent. And it's now listed in the table.

So this is the exponent we used to calculate the K over A squared. And now we have put an asterisk beside that second K over A squared.

And the note below says that was calculated using the test-based exponent b. So we'll try to clarify that.

MEMBER BANERJEE: So you've got the exponents now?

MR. SCHULZ: Yes.

MEMBER BANERJEE: That's all I needed.

Yes.

CHAIRMAN RAY: Squeezed them in.

MR. SCHULZ: Yes, right.

MEMBER BANERJEE: It's nice to have them.

MR. SCHULZ: Okay. Now, yesterday we had shown you some relationship we had developed base for the DP as a function of the fiber. And so what I have here are a few slides that will show you what we did. And we've gotten permission to show you the test data. These are the owner group test data. So it takes a couple of steps here to get to the infamous blue line.

So the first thing is looking at a set of five tests that were run in the owners' group. They were run at three gallons a minute constant flow rate. The fiber was 18 grams, which is actually very close to the 17.3 that we typically use. The chemicals were similar to I think a little bit greater than AP1000 chemicals. And that's not terribly important because, again, the initial chemicals are what give you the biggest effect.

So you see here the blue dots, the blue triangles, and then you see -- so that's the test data. And then a curve was the best fit through those test points.

Now, this --

DR. WALLIS: What these test points are showing is that if you have more particles, more debris, you have less pressure drop.

MR. SCHULZ: In the extreme, yes.

DR. WALLIS: Which means that if you did 32 first, the 45, and then added 15 to get up to 33, you wouldn't expect it to go down, the pressure drop to go down.

Suppose you did a procedure where you did number 32 first and then you put in the extra 15 particles, extra particles. You've already got a pressure drop of 1.74. And then you put in the particles to bring it up to 33. That's a different procedure for 33.

MR. SCHULZ: Yes.

DR. WALLIS: You wouldn't expect it to halve its pressure drop when you put in some more particles, would you?

MR. SCHULZ: Probably not.

DR. WALLIS: So it means that it's very dependent on the procedure.

MR. SCHULZ: And how the bed forms.

DR. WALLIS: Yes. Okay. So we have established that?

MR. SCHULZ: Yes.

MEMBER BANERJEE: What is the particle by --

MR. CUMMINS: This is Ed Cummins.

I think that that is within the variability of our results. I don't believe that you can conclude anything about your procedure.

DR. WALLIS: Well, if it's within the variability of the results, then you can't choose a maximum through the number of points you have there. You can't have it both ways.

I was going to draw attention to the next slide, where the variability in the red is within the -- you know, you've got that uncertainty of the blue points. You can't find a maximum.

So it's nice what you're doing, but it's within such a sparse data set and with so much uncertainty in the data that it's hard to draw kind of some of the conclusions you draw.

MEMBER BANERJEE: What is the particle --

MEMBER SHACK: It's a conservative treatment of the data he's got. I'll grant them that.

MEMBER BANERJEE: What is the particle-fiber ratio?

DR. WALLIS: Is it? Pardon me?

MEMBER BANERJEE: What is the particle-fiber ratio for AP1000 that's working?

MR. SCHULZ: The next slide shows that, Dr. Banerjee, if I might. So basically we used this slide to make a relationship and try to between particle fiber ratio and DP through these points.

MEMBER ARMIJO: Before you leave that, all of your data points but one show a monotonic increase in DP. And you have this one data point that says there's a maximum. How solid is that? You know if you --

MR. SCHULZ: There is other data that the owners' group ran a similar number of tests that we did. And initially they were concentrating their efforts on maximum debris in the plant, maximum particles, maximum fiber, maximum chemicals.

And apparently the staff asked them, said, "Well, AP1000 is getting higher pressure drops with less particles. Would that happen to you?" So they explored reducing the amount of particles and found that it was larger. Then they did this. So this is not the only data that they have.

MEMBER ARMIJO: Okay. So the fact that there is a maximum somewhere is --

DR. WALLIS: But the maximum is dependent

on the procedure. Their procedure is different from yours. They put the particles in first, and then they put in the other stuff.

MR. SCHULZ: Yes.

DR. WALLIS: You put them all in together.

MR. SCHULZ: Which is intended to make a conservative debris bit.

DR. WALLIS: But theirs is also intended to make a conservative debris bit. So you've got two different definitions of what's a conservative --

MEMBER SHACK: They have two different procedures that seem to give them the same result. That is, there is, in fact, a maximum particle fiber loading.

DR. WALLIS: But there must be a procedure like mine, where you do two first and then at the particles, where it is bound to follow the trend that Sam was talking about.

MR. SCHULZ: I mean, that would be interesting if that is a credible situation.

DR. WALLIS: So all of this is very interesting. I think the bottom line is within the scatter and all of the data, there is so much margin. All this other stuff is just a little bit iffy.

MR. SCHULZ: Well, we are not claiming

this is --

MEMBER BANERJEE: Why don't we let you go through --

DR. WALLIS: Yes, let you go through.

MEMBER BANERJEE: -- your presentation?

MR. SCHULZ: Thank you.

So this next slide basically takes what we did in the first slide and adds some AP1000 data points. So these tests, 26, 27, and 28, are where we investigated particle-fiber ratio. And basically we had started with a higher ratio in test 26, which represented the maximum amount of particles that are available in AP1000 along with the maximum fiber.

And based on some inputs from the owners' group data, we thought maybe less particles might be more limiting. And, in fact, when we dropped from 31 to 28, the DP went up almost a factor of two.

Now, yes, there is a lot of variability in AP1000 data, but the differences here are also fairly large.

DR. WALLIS: I would say that those red points show scatter. They don't show a maximum.

MR. SCHULZ: That's what you can say, yes.

DR. WALLIS: Yes.

MR. SCHULZ: We don't agree with that.

DR. WALLIS: No. Well, I think you are on very thin ice.

MR. SCHULZ: Well, okay.

MEMBER BANERJEE: Let's not argue it.

(Laughter.)

MEMBER BANERJEE: Let's move on.

MR. SCHULZ: So what we were really after was trying to incorporate some owners' group data that existed with significantly more fiber.

DR. WALLIS: That's very helpful.

MR. SCHULZ: So they have three data points or three tests, which are on the sort of top left-hand, test 21, 22, 23, which were done with 75 grams of fiber. So that is more than four times AP1000 limits.

And now one of the challenges we had was that the particle-fiber ratios were relatively low: zero, 1, and 4.8. And you see those plotted in the curve with the red squares.

There were also a couple of other tests --

DR. WALLIS: That is an amazing extrapolation, isn't it?

MR. SCHULZ: It's also extremely conservative.

DR. WALLIS: I don't know because --

MR. SCHULZ: Yes, Graham, because we don't have enough particles to come anywhere near the worst particle-fiber ratio in AP1000 with 75 grams.

We would be operating at about five grams, a ratio of five with AP1000. So we would be very near, in fact, the pressure drop conditions, the test conditions, for test 23. And the pressure drop there is not that much larger. Okay?

What we did is something that we think is very conservative. Now, yes, there's a lot of -- there's uncertainty in what we did. I'm not saying there isn't. But what we did is we compared the pressure drop that we got in -- I guess it's -- I'm sorry. It's actually test 21 that had the highest particle-fiber ratio of the 4.8, DP of 6.1 psi.

DR. WALLIS: You're assuming the particle-fiber ratio curve is the same independent of the amount of particles, --

MR. SCHULZ: Yes, which is the --

DR. WALLIS: -- which isn't necessarily so.

MR. SCHULZ: That's true, but it's the only data we have.

MEMBER BANERJEE: But your particles, I mean, based on the number of amount you have

postulated would be what, around 500 grams?

MR. SCHULZ: Of particles?

MEMBER BANERJEE: Yes if you use silicon carbide surrogates for these experiments. Say you kept your particles constant. I've forgotten how much.

MR. SCHULZ: It's shown on the previous slide.

MEMBER BANERJEE: What is that number roughly?

MR. SCHULZ: It's like --

MEMBER BANERJEE: That's about 400 to 500, --

MR. SCHULZ: Yes.

MEMBER BANERJEE: -- somewhere in that range?

MR. SCHULZ: Yes. Yes. So what I'm saying is that the 560 or so grams is the maximum that is available in the plant.

MEMBER BANERJEE: Right. So let's say about where you've got 363 in the owners' group experiments, you would have something of the order of 550. That's the maximum you could have.

MR. SCHULZ: Yes, yes. So it would be something above five and probably below ten.

MEMBER BANERJEE: Okay. All right.

MR. SCHULZ: But what we did is we said, "Well, let's make a plot that goes vertically through this" --

DR. WALLIS: I seem to remember -- I'm sorry. I seem to remember data where they had many more fibers or something, where the particle-fiber ratio at the maximum was one.

MR. SCHULZ: That's true.

DR. WALLIS: So it's quite different than if you have --

MR. SCHULZ: Graham, different conditions.

DR. WALLIS: Yes, but you have assumed that for all conditions, you've got the same shape of curve.

MR. SCHULZ: No. For these flow conditions. The big thing is that what you're talking about is a flow of 45 gallons a minute. The beds behave fundamentally different there.

MEMBER BANERJEE: This is three gpm, right?

MR. SCHULZ: Yes. This is low flow rates, AP1000-type flow rates, low flow. The beds develop and form a single bed right at the inlet to the fuel assembly.

MEMBER BANERJEE: Why don't we let Terry finish the story? And then we will come back and ask you the questions. I want to hear the story.

MR. SCHULZ: Okay. So what we did is extrapolate for the 75-gram case to try to estimate what the maximum DP would be at the worst particle-fiber ratio. And we just basically took the curve we had at 18 grams, compared the DP at the particle-fiber ratio of 4.84, which for 18 grams is the .56 psi. So that's about a factor of 10.8 times lower than the DP we got at the 75 grams.

So we basically just scaled that 18-gram curve up to 75 grams by multiplying every point on the 18-gram curve by 10.8. And what that does, then, is --

MEMBER BANERJEE: Using that red dotted curve, right?

MR. SCHULZ: Yes. That makes that red dotted curve. So it goes up around a DP of just over 16 at a maximum. And that maximum particle-fiber ratio is in the range of 37-38.

DR. WALLIS: This 16 is a big extrapolation, then?

MR. SCHULZ: Yes, it is a big extrapolation and, again, extremely conservative.

MEMBER BANERJEE: Let's see where you go here.

MR. SCHULZ: Okay.

MEMBER BANERJEE: Let's give you this.

MR. SCHULZ: And we also did the same thing for the orange curve there, which has a -- that's test 24, which has a particle-fiber ratio of -- what is that?

MEMBER BANERJEE: Twenty-one.

MR. SCHULZ: Twenty-one. There's another curve in there that's almost on top of the 18-gram. So it doesn't really help very much.

DR. WALLIS: So you were saying that the ratio of the pressure drop is so that the portion, the amount of fiber, the amount of pressure drop is proportional to the amount of fibers? Those curves are all the same, but they're in proportion to each other.

MR. SCHULZ: As a function of particle-fiber ratio, yes.

DR. WALLIS: Yes, but the same particle-fiber ratio there, of course. The maximums also are in the same proportion.

MR. SCHULZ: You draw a straight line up from the particle-fiber ratio of about 37. something.

DR. WALLIS: Right.

MR. SCHULZ: And then you would intersect the blue line at a certain point and the orange line at a higher point and the red line at a much higher point.

DR. WALLIS: Those ratios would be the same as every particle-fiber ratio.

MR. SCHULZ: Yes. And then we took those points and plotted them on a graph of AP versus fiber. So this point on the extreme right, the 16.4 psi, is from the 75-gram point.

DR. WALLIS: So this is very different from what I thought. I thought you actually plotted data for your blue curve. Now you're plotting a huge extrapolation.

MEMBER BANERJEE: Well, no. This is at the worst particle-fiber ratio, right?

MEMBER SHACK: Let him go.

DR. WALLIS: It's not a data point. 16.4 isn't a data point. I thought you were applying data points.

MR. SCHULZ: No. We told you yesterday that for the higher -- we couldn't use numbers too much. And we couldn't show you figures. And we were afraid that it didn't communicate. So hopefully you

at least understand what we did now.

DR. WALLIS: I understand now. Thank you.

MR. SCHULZ: Okay. The 16.4 is certainly an extrapolation based on data but is an extrapolation. And, again, we think it's conservative because we don't have enough particles to support that, which would drop the curve down. The 5.23 is that 30-gram test.

And then there is a fair amount of data, both AP1000 and owners' group, around 18 to 20 grams. So there is directed data there. But trying to figure out what happens at the higher ones, higher conditions, is different.

MEMBER BANERJEE: Well, around the 30 grams, the yellow data point that you have is fairly close. It's not quite at the maximum, but it is almost there.

MR. SCHULZ: There's not that much difference, yes.

MEMBER BANERJEE: So that data point is fairly well-supported.

MR. SCHULZ: And that is a fairly important data point as we go, as you will see.

MEMBER BANERJEE: And, actually, from our point of view, that is probably the only one which is

-- I mean, the rest of the curve may not be very important to us, but that point is.

MR. SCHULZ: That point is very important, yes.

Now, one thing you need to recognize, this curve is done in three GPM.

MEMBER BANERJEE: Can I ask something? If you for the purposes of us, if you didn't show the 16.4, which is much more -- you know, it may be very conservative. Who knows? But only to get to 30 or 40. Wouldn't that serve your purpose up to 30? I mean, that is a much better substantiated point. And just cut the top off.

MR. SCHULZ: We could. We could. It would --

MEMBER BANERJEE: It would be --

MR. SCHULZ: -- tweak the results a little bit. You can see if you --

MEMBER BANERJEE: Would it change the results at all?

MR. SCHULZ: Well, if you removed the 75-gram data point and best fit the other ones, you can imagine the curve would be a little steeper. But it's not going to fundamentally change it. We would still end up with a lot of margin.

DR. WALLIS: But it's not a data point. You said it's a data point.

MR. SCHULZ: The 5.23 is very close to a data point.

DR. WALLIS: You said the 60-75 was a data point.

MR. SCHULZ: It's a data point on the curve, yes.

MEMBER BANERJEE: I'm just trying to --

MR. SCHULZ: I didn't say it was a test data point.

MEMBER BANERJEE: I'm just trying to make our letter easier and our life easier. Okay?

MR. SCHULZ: Okay.

MEMBER ARMIJO: Terry, the orange curve, why doesn't it go through zero and do a best fit through a data point at zero? At least we can depend on that.

MEMBER BANERJEE: It doesn't because the point is it doesn't have to.

MEMBER ARMIJO: Why not?

MEMBER BANERJEE: Because you can still have fiber.

MEMBER ARMIJO: Okay. All right. So --

MR. SCHULZ: If you actually look at --

what is it? -- test 22, top left, 75 grams, they had zero particles and still significant DP.

MEMBER ARMIJO: Okay. Okay. I understand.

MR. SCHULZ: And so the fibers plus chemicals can give you DP.

MEMBER ARMIJO: Okay.

MEMBER BANERJEE: And CIB 25, where is that?

MR. SCHULZ: It's just very -- it's a green line. It's just barely above the --

MEMBER BLEY: You can see it. It's right above the third blue.

MEMBER BANERJEE: Okay. I see it.

MR. SCHULZ: It's only got 20 grams. So it's very close to the 18 grams.

MEMBER BANERJEE: Wherever you are. Yes. Okay.

MR. SCHULZ: It's not terribly useful because it's so close to the 18 grams.

MEMBER BANERJEE: Now, the 30 grams, is there only one point there or do you actually have more data there?

MR. SCHULZ: This is --

MEMBER BANERJEE: The only point?

MR. SCHULZ: -- the only data that --

MEMBER BANERJEE: Well, it's better than nothing, I tell you. All right. I think we've got the story.

MR. SCHULZ: Okay. And the only thing, to the last one --

MEMBER BANERJEE: Yes.

MR. SCHULZ: And, unfortunately, this is not an engineering plot here, but the only difference between this plot and this plot is for this one, we made a minor adjustment because this is at 3.1 GPM, which is the AP1000 flow rate, because if you looked at the previous one and you went over from 4.6, you wouldn't exactly get 30 at the line. But that changes slightly.

MEMBER BANERJEE: So if I took this line, let's say I took that point, 5.23, if you take it to the next slide, it will go down slightly, but --

MR. SCHULZ: Yes. You would raise the --

MEMBER BANERJEE: Line slightly.

MR. SCHULZ: Right. You would raise the line slightly, which means that this, instead of being 30, would be --

MEMBER BANERJEE: But still it shows that your current situation, you have lots of volume.

MR. SCHULZ: Yes.

MEMBER BANERJEE: That is really what we are after.

MR. SCHULZ: We can do that, yes.

MEMBER BANERJEE: I mean, I want a story which is completely defensible so that we can write a letter that nobody is going to come back and tell us that --

MR. SCHULZ: We probably don't need a factor of three or four margin here.

MEMBER BANERJEE: You don't need it, right. Thank you. Very useful.

MR. SCHULZ: Okay.

MEMBER BANERJEE: I think you've got --

CHAIRMAN RAY: Is there anything else you want to say, Terry? We're going to go over all of this in a minute.

MR. SCHULZ: We still have --

CHAIRMAN RAY: Yes. Go ahead.

MR. SCHULZ: -- exactly how to formally transmit this information, but --

7. OTHER CHAPTER 23

MR. CUMMINS: He just asked my question, do you want it modified and how to submit it?

MEMBER BANERJEE: If you can modify it or

make the slide and whatever and impose into the record somehow --

CHAIRMAN RAY: Well, we're going to have a meeting on December 1st, for example. That will have a record in --

MEMBER BANERJEE: I think it would be great if you can show the full Committee this. I think it would set a lot of minds at rest, just this one slide.

CHAIRMAN RAY: Well, we're going to talk about that in a minute, Sanjoy, but I want to first get to this --

MEMBER BANERJEE: I'm done.

CHAIRMAN RAY: All right.

MEMBER BANERJEE: Thank you.

CHAIRMAN RAY: You're welcome.

8. PLANS FOR FULL COMMITTEE

CHAIRMAN RAY: All right. Now, let's set the stage here. We have a meeting on December 1st, which I don't want to give up because inevitably there are going to be some items, like we just discussed, that we want to resolve. It may not be a long meeting, but I don't want to assume anything at the moment.

With that in mind, then, it seems clear in

talking with staff that we're not going to be prepared to write an AIA letter at the full Committee in December. We may be prepared to write a GSI-191 letter, then. That will be up to Sanjoy, who is going to take the oar of drafting such a thing.

MEMBER BANERJEE: Provided you buy me dinner.

(Laughter.)

CHAIRMAN RAY: Only after they say, "We have a letter."

MEMBER BANERJEE: Then it will be a dinner at Michelin three-star.

(Laughter.)

CHAIRMAN RAY: And so the first thing to say is that we need to try, as we were just doing, to make sure that everything that we can do to make such a thing happen is going to be done.

So I'm going to let Sanjoy, with all of our help, make sure he restates. Even though it may seem we're beating a dead horse here, I think it is better to do that than to leave something undone, what is needed for that letter. And then I will be drafting the letter on the amendment itself.

I am going to start by using -- and both of those possibly can get done at the December full

Committee meeting. I don't see anything that prevents it being done other than there are other things on the agenda for December, much to my dismay. And we'll have to see if we can get enough time at the full Committee meeting in December to get both of those things done.

MEMBER BANERJEE: Just one thing, Mr. Chairman, that I really have to leave that Saturday morning.

CHAIRMAN RAY: It will happen. And that's why if you can produce a letter that the full Committee can review, it will go first.

MEMBER BANERJEE: All right.

CHAIRMAN RAY: But we're not going to get bogged down with GSI-191. All right?

MEMBER BANERJEE: I promise.

CHAIRMAN RAY: If I can --

MEMBER BANERJEE: I won't put any language which the Committee will want to remove.

(Laughter.)

CHAIRMAN RAY: Well, there are two stages of ACRS letter writing. One is to get the concepts agreed upon and then to get the words agreed upon. And the second stage is often more painful than the first stage.

MEMBER BANERJEE: Have we ever sat through one of these?

MR. CUMMINS: We've never been invited.

(Laughter.)

CHAIRMAN RAY: Nor will you be.

MEMBER BANERJEE: It's a salutary experience.

CHAIRMAN RAY: Yes. All right. It's the best I can do. I'm trying to lay it out here. All right.

So the point is on December 1st, we are going to try and make sure that anything that's left on the table here when we get up and quit now is taken care of then. And then we are going to spend the rest of the time, those of us who are involved here, trying to produce two letters. And the two letters will compete with each other for whatever time the full Committee can give us.

MEMBER ARMIJO: Now, will the staff be finished with everything they have on the shield building so we can get that out of the way?

CHAIRMAN RAY: Well, that's what I want to -- but I would rather go through that sort of systematically and ask the parties involved here because I can't keep all of this in my head and run

this meeting at the same time. So it's easy for me to have something that I've forgotten to take into consideration in this respect. And that's one of the questions.

MEMBER BROWN: Harold?

CHAIRMAN RAY: Yes?

MEMBER BROWN: Is it two letters or three letters? Are we talking about all three: 191, AIA, and --

CHAIRMAN RAY: No. I tried to say clearly AIA is off the table because the staff may --

MEMBER BROWN: Okay. It's off the table. Okay. All right.

CHAIRMAN RAY: -- won't be done by then.

MEMBER BROWN: That's fine.

CHAIRMAN RAY: And you can attribute that to Thanksgiving week or whatever you'd like, but the fact is I just don't see that happening.

MEMBER BROWN: Okay.

CHAIRMAN RAY: Also, to try and get three letters to the Committee I think, with the other things that they have already on the agenda, is not going to be possible.

So, anyway, so now I want to go through thoroughly both of these two letters, just in terms of

what things remain outstanding, because we may conclude, like AIA, that there is something that precludes it from being done in December.

And in that case, if that were to happen, then we can focus our attention more productively on what can get done. But if there is something that can't get done, believe me, it's not a good idea for us to not do what we can do because we're still wringing our hands over things we can't do.

All right. With that, then, Sanjoy, would you like to go through? Weidong is here to help. I use this as a checklist, but that may not be a great checklist from your standpoint. But just --

MEMBER BANERJEE: I think I have in my head what --

CHAIRMAN RAY: Can you enunciate it? And do you think it will be done by December 1st assuming they walk in here with some slides that --

MEMBER BANERJEE: Yes.

MR. WANG: It looks like from the -- I think it looks like from me we have cleared up most of the action items.

CHAIRMAN RAY: Anything that involves the staff in GSI-191?

MR. WANG: Not that I'm aware of.

CHAIRMAN RAY: Eileen?

MS. McKENNA: I'm sorry, sir?

CHAIRMAN RAY: That's all right. It's okay. It's okay.

MS. McKENNA: Yes?

CHAIRMAN RAY: The question is, is there anything that you're doing that involves GSI-191 that we should be aware of that you owe us or that you might --

MEMBER BANERJEE: You've already addressed the full Committee, right?

MS. McKENNA: I think so. I think the staff has provided everything that it has. And at this point, I think the applicant is trying to answer these additional questions that the Committee has. But staff is not quite doing anything different.

CHAIRMAN RAY: All right. Well, I need to ask.

DR. WALLIS: Who will decide what it thinks about the blue curve independent of what the staff doesn't think. And the staff hasn't said anything about it.

CHAIRMAN RAY: I'm not following you. But direct your question to Sanjoy, would you?

DR. WALLIS: You had some new evidence

presented today, which the staff had nothing to say about. That's okay if the Committee wants to go ahead and use that without any input from the staff if they want to do that.

CHAIRMAN RAY: That's a question for Sanjoy.

MEMBER BANERJEE: Okay. That's fine by me.

CHAIRMAN RAY: All right. Yes is the answer --

(Laughter.)

DR. WALLIS: That's okay. Thank you.

CHAIRMAN RAY: -- unless one other member speaks up and says that it's okay with them.

MEMBER BANERJEE: This is the full Committee.

CHAIRMAN RAY: I understand that. Right now it's okay with me. It's okay with him. Is it okay with you?

MEMBER SHACK: Yes. I mean, we're going to have to come to our own decision on this.

CHAIRMAN RAY: Yes.

MEMBER SHACK: And the staff has already come to their decision. Now it's up to us. Okay? We'll use whatever we have and we want.

CHAIRMAN RAY: Sam, you wanted to say something?

MEMBER ARMIJO: Yes. I just didn't know if we'd done it before as a Committee.

MEMBER BANERJEE: We have.

MEMBER ARMIJO: Okay. So there's no problem.

MEMBER BANERJEE: On many issues.

(Laughter.)

MEMBER ARMIJO: I'll say.

CHAIRMAN RAY: Just in the short time I've been here. That's not a problem. Okay. All right.

MEMBER BANERJEE: Now, we may discuss with Westinghouse a short presentation, which I think should be made to the full Committee if you agree.

CHAIRMAN RAY: Yes, absolutely, whatever you think it takes to get the --

MEMBER BANERJEE: I don't think it needs to be very long, but I think it should summarize. We can discuss it offline or now or whatever. We can give our views to Westinghouse. But I think it would be useful to have a presentation made by Westinghouse to the full Committee.

CHAIRMAN RAY: The only thing I would ask, Sanjoy, is that you be mindful in that request of the

fact that we did take a couple of hours for the full Committee.

MEMBER BANERJEE: Yes, sir. That's why I'm saying it's only what new things have been done.

CHAIRMAN RAY: And I think, really, that is a decision that you need to make because at the end of the day, it is the letter that you're going to -- it's all of our letter, but, I mean, all of us take ownership of it, but you're going to draft the letter.

And the question is, what is it that you would like to have Westinghouse do to help you get that letter approved? So you can address it to them right now or you can say, "I want to think about it" or whichever way you want to go.

MEMBER BANERJEE: Well, why don't we go around? Let me give it some thought.

CHAIRMAN RAY: All right.

MEMBER BANERJEE: And then by the end of the meeting, I'll have my thoughts organized.

CHAIRMAN RAY: Okay. All right. So we're going to shift gears now. And we're just talking about the letter on the -- and things like the shield building and I&C and PRA and whatever anybody can think about. In that regard, where do we stand, Sanjoy, on your request about metallographic?

MEMBER BANERJEE: I went through that report. Actually, a lot of it has to do with radiation damage at pretty high doses to these coatings. Have you looked into those? Have you looked at it, Sam?

MEMBER ARMIJO: No, I haven't seen it.

MEMBER BANERJEE: And quite a bit of it has to also do with epoxy layer, which is put on the zinc coating. I think from my point of view, it was informational, that there is nothing that I have in terms of an issue that, if you want, I can give this to you guys now to read, some light reading. I've been through it. It is interesting.

MEMBER ARMIJO: I have been reading about manganese steels. So I might as well read this.

MEMBER BANERJEE: And, Bill, you probably know this.

MEMBER SHACK: No. I mean, this may be more relevant to some other issues we're discussing than this particular one.

MEMBER BANERJEE: Well, I was interested in it from the point of view of what sort of effect it might have on GSI-191.

MEMBER SHACK: Well, anything that affects containments affects some of our other interests, too.

MEMBER BANERJEE: So, you know, you have to work fairly high dose rates to get really high damage.

CHAIRMAN RAY: Okay. I took that out of turn because I thought you were going to then start thinking. And I didn't want to interrupt your thinking.

So I'm going to start now with open item number 1. Yesterday we focused on closed items. Today we're focusing on open items. Item number 4, Sam, is the flywheel. I believe that -- I shouldn't say what I believe. Do we have all the input that you feel that --

MEMBER ARMIJO: I've got all the input that -- and I did review some of the papers in that EPRI workshop. And, you know, I think the more I read about the history of problems with the high manganese, low chromium material, how the generator guys got into big trouble because they didn't test it convinces me that we have to test the 18 manganese, 18 chrome. And I can write up some notes to that effect, but it does not close the issue with me.

CHAIRMAN RAY: That's fine. All right. Well, rather than notes -- I mean, maybe you want to write notes, but let's assume for just the sake of

argument right now and, you know, so everybody will know where I am coming from, I understand the position to be, that it not being a safety issue makes it a higher-hurdle issue to raise.

Sam feels like it might be a safety issue. I did earlier. It wouldn't take a lot to convince me that it was again. But, in any event, at this point I am just looking at it from that narrow point of view.

MEMBER ARMIJO: Yes. And I chose not to address that yet, but I think there's GDC 10, where you could -- I don't know how you want to read it. You could make it a safety issue.

CHAIRMAN RAY: All right. That's fine.

MEMBER ARMIJO: I'm looking at it as an engineering problem.

CHAIRMAN RAY: Yes.

MEMBER ARMIJO: And it's not a comfortable situation.

CHAIRMAN RAY: Okay. We won't close it, Weidong, just because I feel like we'll leave it active, but we're not asking for anybody to give us anything. Okay.

We had quite a discussion on 6 today. We I think agreed to leave at least question 1 out of the 4 in 6. In any said, Said will want to participate.

Tom gave some input. Tom, are you going to put something in your report about 6? This has to do with the flow distribution.

MR. KRESS: Yes, especially after I read that report.

CHAIRMAN RAY: Yes. So it's definitely open. And I guess I would say, Ed, that as repetitious as it might seem to you, I would like it if somebody can address on December 1st this item further.

MR. CUMMINS: Yes.

CHAIRMAN RAY: I know it seems like going back to the well again and again.

MR. CUMMINS: No, no, no.

CHAIRMAN RAY: All right.

MR. CUMMINS: That's fine.

CHAIRMAN RAY: Item 10 --

MEMBER SHACK: Do you understand what the issues are now? I mean, you know, that may --

MR. CUMMINS: I think so.

MEMBER SHACK: Okay.

CHAIRMAN RAY: Okay. Item 10, I thought we ended there on a -- what will I call it? -- a Dana Powers note. Is that the right way to put it? Bill, I'm looking to you for some help here on 10.

Are we asking for an input, further input, from -- I can't assure you that Dana will be here on the 1st. He will be here on the 30th, I think, for EPR. So he might be here on the 1st.

Should we ask Westinghouse for a presentation on this issue? And if so, can we help them define the problem?

MEMBER SHACK: Well, I mean, there is Graham's issue with it, and there is Dana's issue. I think Dana's issue is a purely statistical one that's hard to find a physical basis for. Graham's question of whether the reasonable assumption is to assume a uniform distribution of fibrous material or a uniform K over A squared as you go around and how you would treat those in a statistical fashion --

DR. WALLIS: I was going to write something up about -- I've got to think about that one.

MEMBER SHACK: -- is the more difficult problem.

DR. WALLIS: We've got to somehow take this one test to test on one element and somehow say how the whole core will behave. That is not a trivial question.

CHAIRMAN RAY: No. I understood that much

of the discussion, not much more, but that much of it I did. So I guess I would say that on 10, we have a could of areas where I don't know what more to ask for from Westinghouse. This is what I am trying to get framed. What is it that we want --

DR. WALLIS: Item 10?

CHAIRMAN RAY: What?

DR. WALLIS: Are you on item 10?

CHAIRMAN RAY: Yes.

DR. WALLIS: Item 10 is something completely different.

CHAIRMAN RAY: Say it again.

DR. WALLIS: It has nothing to do with GSI-191.

MEMBER SHACK: This is the measurement uncertainty.

CHAIRMAN RAY: I didn't say anything about --

DR. WALLIS: That's why he --

MEMBER SHACK: No. Dana didn't raise this issue.

MEMBER BANERJEE: GSI-191 discussion.

MEMBER SHACK: You raised Dana's issue, which is a GSI-191 statistical thing. This is --

CHAIRMAN RAY: Before I did that, I asked

the question, is this Dana's issue?

MEMBER SHACK: No.

CHAIRMAN RAY: And you were busy --

MEMBER SHACK: The answer is no.

CHAIRMAN RAY: Okay. The answer is no. All right. Let's start over again. What do we need on 10, if anything? Because a statistical issue came up. That's what triggered Dana, the thought that Dana --

DR. WALLIS: What we had was we had a presentation by Westinghouse. They had the method of reducing the uncertainty by looking at lots of different measurements. Then Sanjoy said, "What is your approach?"

So they came back and sent us some e-mails. And I read this stuff. And it seemed to me from my own analysis that, yes, the approach was fine for Gaussian distributions of uncertainties. And the question in my mind was then, could Westinghouse justify that these measurements were reasonable approximations to Gaussian uncertainties? If they were spires, it couldn't be taken out this way, for example.

So we haven't yet had anything from Westinghouse about what their method is and why this

applies to the measurement they're going to use it on. We haven't had anything from that.

MEMBER BANERJEE: Well, it may not work with bias.

DR. WALLIS: Do we want to pursue it or not?

CHAIRMAN RAY: Well, I have to ask you a question, which is, could it be significant?

DR. WALLIS: Well, if they want to -- well, it's really for the -- the staff is going to approve this method. That's the question. Significant for what?

CHAIRMAN RAY: For anything that we are concerned about.

DR. WALLIS: Well, what are they going to do with this flow measurement?

CHAIRMAN RAY: The usual things they do.

DR. WALLIS: Staff to make some decision about power uprate.

CHAIRMAN RAY: Yes.

DR. WALLIS: I have pointed out some things about it. I am not really in a position of deciding, is it significant or not?

CHAIRMAN RAY: Okay. Fine. Sanjoy, did you have a chance to look at this?

MEMBER BANERJEE: I know the problem. I know Graham's. He wrote a white paper on it. I read it. It seems correct. I don't know what to do with it. I mean, has Westinghouse --

DR. WALLIS: I don't think the staff should consider. The staff is going to decide whether or not to approve this for power uprates. Really, it's up to the staff to decide, are they going to accept what Westinghouse does or not in the light of the --

CHAIRMAN RAY: Well, at this point in time, we're trying to figure out what we are going to do about it. So go ahead with your question, Sanjoy.

MEMBER BANERJEE: I was going to say, has your white paper been transmitted to ACRS?

DR. WALLIS: Well, I would --

MEMBER BANERJEE: I mean, it would normally be transmitted to the staff.

DR. WALLIS: Well, I've sent various reports and e-mails to Weidong. So that --

MR. WANG: Every e-mail and your comments --

DR. WALLIS: If you want a summary of the conclusions and everything, I can do that, too.

MEMBER BANERJEE: I mean, I'm not very

comfortable dealing directly with Westinghouse.

CHAIRMAN RAY: That's fine. It sounded like you wanted to ask them a question.

MEMBER BANERJEE: Well, I was simply saying that if this was sort of made available to them, they would have a chance to say what they felt about it. I don't know if they have even seen it.

CHAIRMAN RAY: All right. Okay. Here is what we will do.

Eileen, if you guys want to respond on this subject, let's do it on the 1st.

MS. McKENNA: Well, I just wanted to clarify the question about -- I'm not sure when you're asking about the power uprates where you were perhaps thinking about power measurement uncertainty versus reactor coolant system.

DR. WALLIS: If it was just power measurement uncertainty, you can buy a little bit of --

MS. McKENNA: That's not what this is.

DR. WALLIS: It's not what it is?

MS. McKENNA: No, no.

DR. WALLIS: What is it?

MS. McKENNA: This is reactor coolant system flow.

MEMBER BANERJEE: It's a flow measurement.

MS. McKENNA: Flow measurement, right.

DR. WALLIS: But you have a penalty on power because of uncertainties in the flow measurement, don't you?

MS. McKENNA: That's not --

PARTICIPANT: Feedwater flow.

MS. McKENNA: That's not a feedwater flow. This is --

DR. WALLIS: Isn't that what this is about?

MS. McKENNA: No, it's not.

DR. WALLIS: Well, what --

CHAIRMAN RAY: RCS flow is the first line on 10.

MEMBER BANERJEE: Yes. It's using pressure taps as well as different means.

DR. WALLIS: For what purpose?

MEMBER BANERJEE: Well, it can measure RCS flows.

MS. McKENNA: It's an alternative way of measuring reactor --

DR. WALLIS: But, then, what safety issue does that address?

CHAIRMAN RAY: DMBR, doesn't it?

MS. McKENNA: Yes.

DR. WALLIS: So I'm not in a position to say how the uncertainty affects the NBR.

MR. CUMMINS: Yes. There really is extreme difficulty in correctly measuring RCS flow, but there might be ways to say that it changed from whatever the baseline is.

And there is a tech spec that forces you to measure it -- I don't remember -- every month or every some period and so that it didn't degrade. And the fact that you never really measured it very well the first time didn't really get into the equation.

CHAIRMAN RAY: That's one way to look at it, I would think. I am just trying to get at the point of, what is it relevant to? He's saying it's relevant to change, not to absolute value, right?

MR. CUMMINS: If it degrades, it might affect DMB.

CHAIRMAN RAY: Yes.

MR. CUMMINS: I mean -- yes.

CHAIRMAN RAY: But the reason you are measuring it is because you want to identify a change --

MR. CUMMINS: Yes.

CHAIRMAN RAY: -- not because you're using

the measurement to --

MR. CUMMINS: Set power or any --

CHAIRMAN RAY: -- set power levels in the core.

MEMBER BANERJEE: There is a calibration that you do, right, right at the beginning to set --

CHAIRMAN RAY: Yes. We had a presentation on that, as I recall.

MR. CUMMINS: Yes. I mean, there are many ways you try it. One of the ways is you calibrate it against feedwater, which is probably the best way, but --

CHAIRMAN RAY: That's the way we have all done it.

MR. CUMMINS: Right. So we mentioned seven or eight ways. And some of them when you -- all of them have errors. And when you use all of them together, the error is smaller.

CHAIRMAN RAY: Okay. Well, I am not going to give up on this until I get it run to ground. As I recall, the issue came up in the way that it's stated here, which is we are going to measure flow. Ed is asserting detect changes or degradation in flow. I thought it was being measured in order to get a more accurate number to reduce the penalty, in other words,

that you're having to assume.

MR. CUMMINS: No, no.

CHAIRMAN RAY: Okay. All right. If that's not the case, that's fine. So should we pursue this further? And, if so, what should we do? I'm not asking Graham now. I'm asking you, Sanjoy and Bill and anybody else who has an opinion.

MEMBER SHACK: Well, if it's only deltas they are worried about, then the bias problem becomes reduced --

CHAIRMAN RAY: Yes.

MEMBER SHACK: -- because the bias will disappear. And it seems to me that, even if you don't believe the distribution is Gaussian, weighting the measurement by the standard deviation, whatever probability distribution you are doing is probably a better way to combine measurements.

DR. WALLIS: Even if there was bias before and now it's after, it couldn't get worse.

MEMBER SHACK: Yes.

MR. CUMMINS: I mean, I suppose that before we put too much weight on only paying attention to change, if we decided that the flow was much different than our design flow, that would be a concern by everybody.

So the initial one makes some difference, but it really is not used to set the power. If it was way off, we would have to think about how we would set the power. After that, I think the tech spec is mostly intended to make sure that it doesn't decrease.

MEMBER SHACK: No statistical treatment would deal with bias. I mean, you have to deal with bias either by calibrating your instruments, developing a new theory --

MEMBER BANERJEE: That's what I was saying, that you have a means of calibration in the beginning.

MEMBER SHACK: In which case, you know, you then presume that your bias errors are small enough to be acceptable and you are dealing with statistical errors. And is it Gaussian? Well, who knows? I mean, but it's probably close enough to assume that this is the best way you can combine the measurements.

MEMBER BANERJEE: I suppose the real question is, can you with your calibration take care of the bias if there are biases? This is maybe -- this is the only question that is significant.

DR. WALLIS: Well, how do you calibrate the code? One of these measurements is based on the

pressure drop predicted if I understand by codes. That's not --

MEMBER BANERJEE: But you can do it in the beginning. Because they have an absolute calibration against a heat -- the feedwater, right? Isn't that fair? I mean, I am trying to understand.

MR. CUMMINS: We do absolutely measure it against feedwater, but what we divide by is delta T. And the TH part of delta T is hard to measure.

MEMBER BANERJEE: Yes, yes, yes.

DR. WALLIS: I would think until it's used for some purpose that involves safety, the ACRS has no concern.

CHAIRMAN RAY: Well, I wish I had a memory adequate. I just was left with the impression we were doing this because it would give us a better measure of flow and we could reduce the uncertainty that we had to include in the core thermal hydraulic calculations. I thought that's why we were doing it.

MEMBER SHACK: Well, I wasn't here.

CHAIRMAN RAY: Okay. Well, Weidong says I'm right.

MR. WANG: I think I remember this is --

CHAIRMAN RAY: And so I don't want to dismiss it as not relevant to anything, but I am not

the thermal hydraulic guy. I am only trying to -- the paper was provided to those who are expert in this area. And I'm just trying to find out, what should we do now?

MR. CUMMINS: We have a minimum design flow, which is a DMB thing. And if we weren't confident that we had met that minimum design flow at the start, we would have a problem, though we were kind of discussing that the errors would -- you have some error range. And it will be easier to determine that we do have minimum design flow than what the actual real flow is.

CHAIRMAN RAY: Here's what we're going to do. Weidong, go look up -- not now but when we're done, look up the presentation that was given to us. Send it to everybody and say, "Here is the presentation that was given that resulted in action item 10. The references that were called for after several go-arounds here were provided. And it's up to the members to decide whether there is anything further required." Okay?

MR. WANG: Yes.

CHAIRMAN RAY: Is that all right, Sanjoy? All right. Carrying on, we've got to close 11, close 37. Forty-six is a COL item. Forty-eight, 49 are

closed. So are 50, 51, 52, 53, 55, 56, 57.

Sixty. Sixty is the one that has to do with the discussion we were trying to have earlier about flow distribution on the outside of containment.

Are we going to get more on that subject? I'm trying to recollect now where it was finally left. We were going to see some movies or something? What was it? Tell me what happens next.

MR. MELTON: Yes, sir. We're planning on coming back on December 1st with some pointed information to address the flow, what we're talking about.

CHAIRMAN RAY: Thank you. All right. Well, make sure Said knows that we're going to be doing that in the December 1st meeting. Okay?

MEMBER BANERJEE: And maybe also Said has issues relating to what is the manometric number, what is the relationship of thin breakdown into rubulettes that you are far away from these conditions? I think that is more or less --

CHAIRMAN RAY: Yes. And we're going to try, but we are not going to make a hard barrier. We're going to try and recognize that to some extent we're revisiting stuff that's been talked about in the past. But now it enters the thought process again as

a result of this amendment.

Okay. Sixty-two, 63, and 64 are COL items. Sixty-five is closed in terms of additional input required, but -- well, it's just closed.

MEMBER BROWN: It's the -- all we've got to do is see. We talked some more.

MS. McKENNA: Test plan I think --

MEMBER BROWN: It's the test plan, how it's going to be reflected in an ITAC. We had some discussions on that.

CHAIRMAN RAY: Okay. Sixty-seven is a COL item. And then we're into 68. Sanjoy, let's see. You had some action items on 68, 69. This is the COBRA/TRAC and --

MEMBER BANERJEE: I'm not following this because I am trying to --

CHAIRMAN RAY: I know you are.

MEMBER BANERJEE: -- work on something else.

CHAIRMAN RAY: I'm trying to get your attention now because I need it.

MEMBER BANERJEE: All right.

CHAIRMAN RAY: Sixty-eight and 69 are COBRA/TRAC nodalization we had nice discussions about. And you got some more information today.

MEMBER BANERJEE: But I think all the GSI-191 items are closed now.

CHAIRMAN RAY: Well, I don't want to skip over this. This is 68. If I could ask you to just take a look at it so I don't make anything go away prematurely. Yes. Just glance down that, would you please, and tell me if there is anything left?

MEMBER BANERJEE: I think all of those are closed.

CHAIRMAN RAY: All right. That's what you and I wrote last time.

MEMBER BANERJEE: Yes.

CHAIRMAN RAY: And 69 is on the next page. If you would look at that, too, please? Thank you.

MEMBER BANERJEE: There is a little bit of ongoing discussions, but essentially that is closed.

CHAIRMAN RAY: All right. So I am going to say that 68 and 69 are closed as a result of what happened today. Okay?

MEMBER BANERJEE: Seventy is closed.

CHAIRMAN RAY: Yes. That's right.

MEMBER BANERJEE: Seventy-one is closed.

CHAIRMAN RAY: And that was going to be my question. How about 71? You're satisfied with that?

MEMBER BANERJEE: Right.

CHAIRMAN RAY: And that brings me to 72. And, Charlie?

MEMBER BROWN: Which items?

CHAIRMAN RAY: Seventy-two. Help me here again.

MEMBER BROWN: I had 72 a minute ago. And now --

MEMBER SHACK: Spurious action with EDS.

CHAIRMAN RAY: Yes. The issue I think at the moment is you have in mind a problem or not a problem, a concern in the area of --

MEMBER BROWN: I'm comfortable without testing the valves post-seismic operability.

CHAIRMAN RAY: Okay. But I was thinking about the thing that came to your mind in terms of, well, all right. We put the block in for the common mode failure.

MEMBER BROWN: I don't have any -- yes. Yes. I'm separating the block.

CHAIRMAN RAY: All right.

MEMBER BROWN: The block part I don't have any problem with. It's the other issue. I won't say I don't have a problem with that because they haven't come through it yet. They are still doing their evaluation in terms of impact. So until when the

staff is finished with their evaluation, then I'll determine whether I'm happy or not.

Is that fair, Eileen?

MS. McKENNA: Yes. I just want to recognize that that won't be before December.

CHAIRMAN RAY: Well, that means we've got to come up with a comment if you want to preserve it formally.

MEMBER BROWN: Okay.

MS. McKENNA: Right.

CHAIRMAN RAY: If you will try and do that? And then, Dennis, we have got the 30-day manual out-of-service DAS concern that you were thinking about.

MEMBER BLEY: And that's linked in with the investment protection on the outer DAS and the credit that's given in the PRA. And I have to chase that a little when we get back together.

CHAIRMAN RAY: All right. We'll leave that open. And then, finally, 73 is I think the one you were speaking about or you thought I was asking about to start with. It's the last one here.

MEMBER BROWN: Seventy-three is? Just tell me. I haven't turned the page to that yet. Turbine overspeed is just a matter of what they are

going to do with the 120 percent --

CHAIRMAN RAY: Yes.

MEMBER BROWN: -- response time verification. And I gave a --

DR. WALLIS: That's closed. We're talking about part 2 now.

MEMBER BROWN: Only item 2?

CHAIRMAN RAY: That's right.

MEMBER BROWN: There were three questions. One and 3 are closed.

CHAIRMAN RAY: Right.

MEMBER BROWN: Two is still open.

CHAIRMAN RAY: That takes care of using the open items as a checklist. Now, Sam, you asked a question about staff review of the shield design and when the staff was going to be done with the review of the shield design.

MEMBER ARMIJO: Yes.

CHAIRMAN RAY: What do we have in --

MEMBER ARMIJO: Those were the inspection result reports that AIA-related --

CHAIRMAN RAY: AIA-related.

MEMBER SHACK: Design basis?

MEMBER ARMIJO: Yes.

MEMBER SHACK: They're done, right?

MEMBER ARMIJO: Yes.

CHAIRMAN RAY: Anything other than AIA-related?

MEMBER ARMIJO: No.

CHAIRMAN RAY: Okay.

MS. McKENNA: We'll have to get back to you on exactly when the staff is ready to talk about the NOV responses, but I don't think it would be December 1st because of the holiday and discussion. But as soon as we can, we will let the Committee know.

CHAIRMAN RAY: Yes. Well, trying to squeeze three AP1000 letters through the --

MS. McKENNA: It's probably --

CHAIRMAN RAY: -- full Committee isn't going to be very easy anyway.

All right. Okay. Is there anything, Eileen, to your knowledge, that I have left out of this recitation?

MS. McKENNA: No. I think that captures. That matches my list that I was keeping as we went.

CHAIRMAN RAY: Westinghouse, I don't expect you to add things to my list, but there may be something lurking that you want to address because you know it will come up again if you don't. So is there anything you have in mind?

MR. CUMMINS: I hope not. I don't know of anything.

CHAIRMAN RAY: All right. Any of the members here have anything they want to add? What is that?

MEMBER SHACK: What did we decide about 37?

CHAIRMAN RAY: Thirty-seven.

MEMBER BROWN: That's the statistical analysis of the GSI-191 tests.

MEMBER BANERJEE: I had that --

CHAIRMAN RAY: I had it crossed off because -- excuse me.

MEMBER BANERJEE: I had that as part of my list of things that they would need to briefly address, but I don't know what approach to take. That's --

CHAIRMAN RAY: Well, I was going to turn it over to you for your list now that I gave you such a short amount of time to think about your list.

MEMBER BANERJEE: Well, one of the items was clearly this thing that Dana brought up. I'm not quite sure what Westinghouse has to do about it. It's what we might need to do ourselves to look at it and come to some sort of a conclusion.

Graham was going to take a look and maybe write a white paper, which we could send to Dana for comments. I mean, the main concern is coming from Dana.

DR. WALLIS: Was I --

MEMBER BANERJEE: I am asking your advice on how you think we should deal with this.

DR. WALLIS: As I understand it, Sanjoy is writing a letter on just AP1000. I will try to get material to Sanjoy which will help him write that letter. I think we'll cover this as well as some of the other questions.

CHAIRMAN RAY: Right. You and Tom are --

MEMBER BANERJEE: And then we're going to need to get --

CHAIRMAN RAY: We're going to need to get input to it.

Yes? Go ahead.

MEMBER BANERJEE: We need to get this to Dana because he's the person who is going to be assigned about it. He brought it up with me before.

CHAIRMAN RAY: Well, I think he's going to be in -- isn't there an EPR meeting on the 30th of November?

MEMBER BANERJEE: Yes.

CHAIRMAN RAY: Okay. Then I believe we need to corner him on the 1st and make sure that --

MEMBER BANERJEE: If he's available.

CHAIRMAN RAY: -- we run it to ground.

MEMBER BANERJEE: If he hasn't gone off to France or something.

CHAIRMAN RAY: That's right. I'm going to believe that he will. So the 1st we want to try and get that done.

Right now it looks to me like the 1st is likely to be not more than a half-day meeting. But I don't want to fail.

MEMBER BANERJEE: I don't believe that.

(Laughter.)

MEMBER BANERJEE: I mean, if they have to deal with the CFD calculations and --

CHAIRMAN RAY: All right. But you also need to give them guidance on what you want them to present to the full Committee on GSI-191. I've got to do the same thing on the amendment.

MEMBER BANERJEE: Right. I was going to. So, if you want, why don't we discuss it? I'll give you those points. And then if we are in agreement, then Westinghouse can --

MEMBER SHACK: I mean, there's containment

cooling. There's VIPER. I can't see how we could possibly do this in a more --

(Whereupon, the foregoing matter went off the record briefly.)

CHAIRMAN RAY: Fine. So it's a whole-day meeting. That's what I wanted it to be anyway. Now, yes. Go ahead. And I certainly agree because at this point in time, what we want Westinghouse to do is to begin thinking about the full Committee meeting. And so if you've got in mind what you'd like them to address?

MEMBER BANERJEE: Well, what I thought is they could give a brief summary of the things that they produced as information which has allowed us to close out all the open items. I mean, number 68 or something, we could name an open item by the issue that was involved there and briefly summarize the information that was brought in front of us about this open item.

Now, that's okay, but at the end, what would be I think important is to show that, even if we are uncertain about, let's say, the loss factors of pressure losses, whichever way you want to phrase that, as well as the fiber content and the effect of the different parameters. We have quite a lot of

margin to any condition which can lead to dryout or to boron deposition. And I think that's the bottom line, which will allow us to write the letter.

So I wouldn't exaggerate and show points at 16.4, something. I'd rather be very conservative. I mean, I can't speak for you, but that's the way I would be to get it through.

CHAIRMAN RAY: Keep in mind that I will refer back to the presentation made to the full Committee previously.

MEMBER BANERJEE: Right. Don't repeat the stuff.

CHAIRMAN RAY: And I'm going to say we're not going to repeat general information that was provided then.

MEMBER BANERJEE: It's always nice to have a little sketch showing where the water is going. And even when I sort of gave it to the Commission, GSI-191, we made a little sketch for them.

CHAIRMAN RAY: Yes.

MEMBER BANERJEE: It's always nice to have that to remind us why this is an issue that's very briefly --

CHAIRMAN RAY: Yes. Well, I thought the SER did a pretty good job of bringing a reader to that

understanding. And so that's fine. We ought to get them in on the first day of the full Committee meeting. And we ought to have a separate two hours on GSI-191 and on the amendment.

And, Eileen, I don't know what you guys --

MEMBER BANERJEE: I don't think we need two hours. One hour is sufficient, more than sufficient.

CHAIRMAN RAY: Whatever you say. One hour.

MEMBER BANERJEE: All right.

CHAIRMAN RAY: Then I'll take three ours on the amendment, whatever.

MEMBER BANERJEE: All right. All right.

CHAIRMAN RAY: But we're going to have to really -- because of what we're trying to get done here, we're really going to have to cut short staff, what I call routine staff, summary statements. I mean, it's going to be a real tough job when it gets to the amendment of trying to adequately inform the full Committee in the limited time we have available to then write a letter.

MS. McKENNA: That was why we put this on the agenda today, was we really want to understand what items you particularly wanted us to cover for the

full Committee and not spend a lot of time given history and the --

CHAIRMAN RAY: Yes. I know that's right.

MS. McKENNA: -- so many chapters and so many open items and things like that but really hit some of the big topics, like obviously the shield building is one and then maybe a couple of others you would like to suggest. We have ideas, but we really want to --

CHAIRMAN RAY: Well, give me any ideas you have right now that are on the top of your head.

MS. McKENNA: A couple of the changes in the chapter 23; containment vacuum relief, for example, we thought might be worthy of discussion. I think the air vents may come in through the discussion of the shield building. You know, I think those are some of the more major topics.

CHAIRMAN RAY: Does the full Committee get an AIA discussion, SDI presentation on AIA, or not? I realize that's after December, but I am asking a question.

MS. McKENNA: At this point there is nothing planned that way, but --

CHAIRMAN RAY: Okay.

MS. McKENNA: -- it is certainly something

that --

MEMBER SHACK: Write a letter and --

MS. McKENNA: Yes.

CHAIRMAN RAY: We'll have to have a separate discussion of that. Okay. And I thought that what Lee presented and what Westinghouse did that we saw this time was very responsive and helpful.

MEMBER SHACK: One of the big issues is always I&C.

CHAIRMAN RAY: Yes.

MEMBER SHACK: I don't know how that's fruitfully discussed in the whole Committee, but --

CHAIRMAN RAY: Okay. Let's agree on that. I&C and shield building.

MS. McKENNA: Okay.

CHAIRMAN RAY: Dennis, in your area anything other than I&C that -- I'm just searching right now for topics that the full Committee needs a briefing on related to the amendment.

MEMBER BLEY: Not that I'm thinking of right now.

CHAIRMAN RAY: No significant changes in PRA or --

MEMBER BLEY: We need to go back. I'll go back through my notes and double-check.

CHAIRMAN RAY: Yes, Charlie?

MEMBER BROWN: I would think some discussion, I would think the I&C discussion, hopefully could be somewhat summarized fairly crisply relative to the four pillars.

CHAIRMAN RAY: Well, everything needs to be crisp.

MEMBER BROWN: I'm just saying if they focus it on those area because the rest of the detail has been pretty much gone through by the staff. And those are the areas we have been struggling with in terms of independence to determine it. So if they give a brief discussion that they have satisfied that and there are actions in place, I think that putting down the next point, that's I&C. Okay?

This is also kind of I&C. The DAS issue I think we ought to at least emphasize the point that this is a two out of two system, number one, so everybody is totally cognizant of that, understand the fallout of that relative to one of the channels out of service.

You don't have anything DAS-wise. There are two aspects to the DAS. One is automatic. One is manual. There are four automatic DAS functions. There are 11 manual DAS functions. The four

automatics are also encompassed under the manual. And so you can accomplish those four manually as well.

Right now the way the tech specs are written or the investment protection, whichever they might have a -- both of those could be out of service for 14 days. That's based on the paperwork that somebody asked for some clarification and one of the I&C guys gave that to --

CHAIRMAN RAY: Has this changed?

MEMBER BROWN: I don't know. Let me finish.

CHAIRMAN RAY: Well, but --

MEMBER BROWN: Right now you could have both out of service simultaneously.

CHAIRMAN RAY: Yes. But I'm asking, has that changed as a result of the amendment?

MEMBER BROWN: I don't know. It's just if I have all DAS, both manual and auto, out of service, that's probably not --

MR. CUMMINS: It has not changed.

CHAIRMAN RAY: Okay. The problem I'm having, Charlie, is I can't let things that aren't changed by the amendment take up time unless we think it's at the point where we have to raise it as an issue that we want to go back and revisit the existing

certification. We just can't do that.

MEMBER BROWN: I understand that point. You know, it was all done before my watch. So --

CHAIRMAN RAY: That's right. So we'll exonerate you from it. But the point is --

MEMBER BROWN: I will not feel exonerated -- okay? -- walking away from it. Now, that's my fundamental problem. Okay?

CHAIRMAN RAY: All right. Well, then I would suggest that you make that point clear in the Committee discussion.

MEMBER BROWN: Absolutely. I'm not questioning that.

CHAIRMAN RAY: But I'm not going to take time presenting something that hasn't been changed by the amendment without a very good reason.

MEMBER BROWN: Harold?

CHAIRMAN RAY: Yes?

MEMBER BROWN: If I had nothing else to draw on, I understand that that has not changed. But still the articulation of having both manual DAS and auto DAS out of service simultaneously does not sound like a prudent method of operation regardless. I don't care whether it was approved before or not --

CHAIRMAN RAY: I understand.

MEMBER BROWN: -- because it probably wasn't addressed in that context. It was probably only addressed as one or the other.

CHAIRMAN RAY: And if there is something that you can identify that says, "Well, we now know something that we didn't know when we certified it before," anything, but I can't get into --

MEMBER BROWN: I will ask the staff to tell me if they considered that.

CHAIRMAN RAY: I don't know if that's the --

MEMBER BLEY: This came up through the connection of the PRA, too. And I will double-check back to make sure that the requirements stayed the same and the modeling was the same.

MEMBER BROWN: No. The PRA discussion under the DAS, under the architecture does not -- it talks about the PRA being used to give credit to these, but it does not specify the details.

CHAIRMAN RAY: Well, I've said what I've said, which is I'm just not going to take full Committee time to review something that hasn't been changed by the amendment as a general matter. I mean, there could be some circumstance where it simply was so critical that we had to do that, but this doesn't

do that.

Yes, Sam?

MEMBER ARMIJO: Yes. When is the full Committee going to hear about the pump and the flywheel issue?

CHAIRMAN RAY: Okay. I think that's a fair point, absolutely. The pump has been changed. The design of the pump --

MEMBER ARMIJO: The flywheel has been changed.

CHAIRMAN RAY: The flywheel has been changed. So put that on your list, Ed. We're going to have to have a discussion about the pump because a) we have to establish that it isn't a safety issue because you have to first do that before Sam then can say, well, he differs.

MEMBER ARMIJO: I disagree.

CHAIRMAN RAY: Yes.

MR. CUMMINS: Okay. We'll be ready for the pump.

CHAIRMAN RAY: All right. Anything else now? Really, I'm really trying to --

MEMBER BROWN: No because --

CHAIRMAN RAY: I appreciate your input, Charlie. I'm just telling you that's the way I have

to --

MEMBER BONACA: I have a question.

CHAIRMAN RAY: -- rule on anything.

Yes, Mario?

MEMBER BONACA: Regarding the Committee, I mean, how knowledgeable are they on this amendment? Because, I mean, that is important for you. You have so many items here that we have covered. And to some degree you have got to document them at some point. And maybe this could be a high-level presentation.

And what are you saying? This is the amendment. And that is high cascades into some groupings if you can present in a slide, for example.

CHAIRMAN RAY: Yes, we can do that. Maybe that's a good thing to do. I've already asked Westinghouse how they would describe this amendment in terms of what is it. It's an enormous number of things. You can call it design finalization. You can come up with some label to put on it. Okay?

But, in reality, it is a lot of things that naturally arise at this stage of a complex reactor development like this is. So it's something that should be anticipated. It doesn't indicate anything other than it's we're at a different stage than we were when the rev. 15 was certified.

So that we don't get into some controversy about what name we give the amendment or what we say it is, I asked them to tell me what you think I should say it is to start with.

But you're making another suggestion, which I think is related. And that is, well, okay. You give it a name. You call it design finalization or something like that, whatever you decide you're going to call it. How about trying to put it into categories that are affected by the change? Well, the shield building is an easy one.

MEMBER BONACA: Right.

CHAIRMAN RAY: I&C is another one. People expect that to change with time. Everybody knows that. Vendor selection affecting things like the reactor coolant pump is another one. So let me invite Westinghouse if they wish to do so to suggest some ways that I can bucket this thing, that I can then communicate it to the membership in a way that doesn't unfairly or inaccurately characterize what the amendment represents.

MEMBER ARMIJO: Harold, I think you should get input from the staff as well that they don't have a different view of what the amendment is.

CHAIRMAN RAY: Right. But, rather than

get two things and try and marry them up, I was going to see what Westinghouse suggested to me. And then I was going to say, "Do you guys agree with this?"

MEMBER ARMIJO: This is what we thought we were asking for and confirm it.

CHAIRMAN RAY: Yes. You know, --

MR. CUMMINS: So do you want a presentation we could make?

CHAIRMAN RAY: Well, certainly you are welcome to do that.

MR. CUMMINS: To the full Committee maybe for an hour or a short time.

CHAIRMAN RAY: Yes, a short time.

MR. CUMMINS: Yes.

CHAIRMAN RAY: But something that would allow us to say, "Yes. That is a fair characterization of this thing." And, like I say, there is nothing about it -- I don't want to characterize it in a way that mislabels it and something you would be uncomfortable with unless I just disagree with what you say.

MR. CUMMINS: So maybe we'll draft a presentation in the near term and send it to you.

CHAIRMAN RAY: All right.

MR. CUMMINS: And then you can see what

you think.

CHAIRMAN RAY: And I'll ask the staff for their input, see if they have a different view. Like I say, there are some things to carve out easily, like AIA affects the shield building. Okay. We've got the shield building. Put that over here. There's lots and lots of other stuff. We worked like hell on this thing.

MEMBER BONACA: That's a good point. What I mean is that otherwise for the record, all the Committee here is three or four items.

CHAIRMAN RAY: Yes.

MEMBER BONACA: And then they remain with the question of what it is. I think if you put it together in an organized fashion, then there is a logic for people to listen to -- you didn't have to say how you developed an issue. You think people are going to say this issue has been reviewed and closed. But there was this issue that we have talked about, so something like that.

CHAIRMAN RAY: Okay. Well, it is a chore that we need to do. They certainly, the full Committee, has heard me whine about this enough that they know that it's something peculiar or unusual. And I'm just finding a way to be able to, as Mario

said, characterize it overall and not misrepresent what we're dealing with.

MEMBER SHACK: How much time do you have at the full Committee?

CHAIRMAN RAY: I can't tell you. I was asking -- there's Tanny. He can tell us.

MR. SANTOS: At the December full Committee meeting, I've got three hours assigned on the first day. But it's all afternoon. The only thing after that is letter writing. So if you need a little more time, it's just going to cut into the letter writing for that day.

MEMBER SHACK: I mean, Charlie has got a note here saying, "How can we do this in four hours?" And I kind of have to agree with him. I mean, six hours might be closer to reality.

CHAIRMAN RAY: Yes.

MEMBER ARMIJO: I think it's a one-day meeting.

CHAIRMAN RAY: I provided input more than once, saying that it bothered me that we had anything going on at the full Committee other than this. So let me just -- you hear what people are saying, Tanny. I mean, I think we'd better give more time than just three hours plus going into the night.

MR. SANTOS: Well, start 1:00 o'clock on the Thursday and then until Said wants to adjourn that night. I mean --

CHAIRMAN RAY: Okay. Let me just --

MEMBER SHACK: What's in the morning?

MR. SANTOS: The license renewal and the rule on emergency planning.

MEMBER SHACK: Can we move those to the next day?

MR. SANTOS: No. The next already has a safety culture and RAMONA.

CHAIRMAN RAY: Well, here. Let me just do it this way. Could you take a message back from this Subcommittee -- and if there is anybody on the Subcommittee who disagrees say so -- that the Subcommittee feels we need more time than three hours plus going into the evening? Okay? Just tell them that and --

MEMBER BANERJEE: And some of that stuff, like RAMONA, can be put off for another meeting.

PARTICIPANT: Safety culture is one.

CHAIRMAN RAY: Tell them, listen, I have made the point we should count on a January meeting. If there are things that are absolutely critical, have got to be done, then tell them the chances are that it

is going to have to be this, I mean, part of this, not all of it, or it's one of those things.

I mean, people with more experience here than me say three hours ain't going to do it, four hours won't do it either.

MEMBER BANERJEE: No way.

CHAIRMAN RAY: Okay.

MEMBER BANERJEE: It's a major certification. I mean, amendment or certification, come on. We are serious.

CHAIRMAN RAY: Yes.

MEMBER SHACK: I hate to bring up another thing, Harold. Do we want to deal with the non-concurrence at the full Committee?

MEMBER BANERJEE: Yes.

CHAIRMAN RAY: Okay. I'm glad you --

MEMBER BANERJEE: I think we need a full day.

CHAIRMAN RAY: All right. But the problem is I've said that before and I haven't prevailed.

MEMBER BROWN: Well, we'll support you.

CHAIRMAN RAY: All right. Good.

MEMBER BANERJEE: And we are vociferous.

(Laughter.)

CHAIRMAN RAY: Be vociferous. Send

e-mails to the Staff Director and so on. Okay. The non-concurrence. That's a good point. It, of course, fits into the shield building discussion.

And, thinking about it, I think, Bill, it has to fall to you to characterize because we have talked about it and I know you understand it. I'm talking about Boze's position. The question in my mind, then, is, given that, do you think Westinghouse should make a pitch?

I don't think we should ask Westinghouse to respond to the position. I don't think we can do that. We've got to say we looked at the non-concurrence and came to some conclusion. But now, having said that, you've been Chairman before. Tell me what you think we should do.

MEMBER SHACK: Well, I haven't dealt with a non-concurrence on a certification before. So I think somehow it seems to me that we have to have that presented to the full Committee.

CHAIRMAN RAY: You're the most expert person able to do it.

MEMBER SHACK: You want to then depend on you and I getting our views and Boze's views or we want to have Westinghouse make a presentation. But, again, we're running out of time.

CHAIRMAN RAY: Let me just say --

MR. CUMMINS: Maybe we could make something like we did just the other day, the summary --

MEMBER SHACK: That would be much closer to what we would want.

MR. CUMMINS: Yes.

MEMBER SHACK: You know, the second presentation we had for half an hour, I think.

MR. CUMMINS: Yes.

MEMBER SHACK: If we gave the non-concurrence a half-hour and Westinghouse a half-hour, we're out an hour already.

CHAIRMAN RAY: Wait a minute. This is -- I don't think we want to go there, frankly, but let's think about it offline. I don't think we want the applicant to be in a position of even just based on the proximity of the presentations appearing to respond to the non-concurrence.

Non-concurrence has gotten a response. The responses by the staff to the non-concurrence, I think it's right that we need to mention that we have reviewed it, but I don't want to have a debate along those lines in front of the Committee. I just don't think --

MEMBER ARMIJO: I agree with you, Harold. I think otherwise we would get at least an hour on that issue. And I think in your opening remarks, that issue should be included so that everything has been brought to us and presented to us and we'll be making our -- and we made our conclusion as a Subcommittee, I think. I don't know, but --

CHAIRMAN RAY: The only response I believe that can be discussed as the non-concurrence is the response that has already been made in the staff response. That's it.

MEMBER BLEY: However, when Westinghouse presents their story on the shield building, I don't see why some of that material that was presented the second day wouldn't be in there. It's very appropriate.

CHAIRMAN RAY: Yes, that's right, but not from the standpoint of --

MEMBER BLEY: Just as part of this shield building discussion.

CHAIRMAN RAY: That's fair enough.

MR. KRESS: Just a point on this. We had some non-concurrences when I was Chairman. And the reason they come to the ACRS with them is that is the only place they have to go to get an unbiased review.

You've got the staff on one side and the non-concurrence on the other side and may involve the vendor but maybe not.

And I think the ACRS has to come to some conclusion on it. It has to give their opinion. And it has to be in writing, in a letter.

Now, I don't know. You know, I don't know how to do that.

CHAIRMAN RAY: Yes, but in this case, Tom, I think -- let me just put this to you and see what you say. In this case, I think we're prepared to do that without having a debate in front of the Committee between the applicant and the staff member.

MR. KRESS: Yes. I don't think you need that either. Yes. I think you can discuss it among yourselves.

CHAIRMAN RAY: Yes. I agree. We've got to address it. That's why I agree with Bill on that point.

MR. KRESS: I think you do need the person who made the non-compliance issue to come and address the full Committee, though, --

CHAIRMAN RAY: Okay.

MR. KRESS: -- because he's entitled to that.

CHAIRMAN RAY: Tanny, would you check and see if Ed is okay with that?

MR. SANTOS: Okay.

CHAIRMAN RAY: All right. But I not want to get into a "Okay. We've heard the non-concurrence. Now let's hear what Westinghouse has to say."

MEMBER BROWN: No, but you can hear what the staff has to say.

CHAIRMAN RAY: We can, but I don't know that that is a good use of our time.

MEMBER SHACK: Well, no. I don't know that either one of them is in any sense responding to the non-concurrence. I mean, the staff has to present to us why they think the shield building design is acceptable.

CHAIRMAN RAY: Right.

MEMBER SHACK: I don't think it's unreasonable for Westinghouse to tell us why they did the shield building the way they did.

CHAIRMAN RAY: All right. And we can hear the non-concurrence.

MEMBER SHACK: Then we can hear the non-concurrence.

CHAIRMAN RAY: That's right.

MEMBER SHACK: That would be roughly the

way I would do it.

CHAIRMAN RAY: Right. It's not a debate.

MEMBER BONACA: That issue can take the day away.

MEMBER BROWN: I mean, that's the problem. It's the problem.

MEMBER BONACA: You have to be really firm and say, "Let's move on."

MEMBER ARMIJO: You're never going to finish in an hour on that.

MEMBER BONACA: This issue could take hours. I can think of some members who love to talk about the issue.

MEMBER BROWN: How can you not?

MEMBER SHACK: Maybe it has to take --

CHAIRMAN RAY: As far as I am concerned, Bill and I could go to the full Committee and say, "We have listened to the non-concurrence. We have gotten our consultant to review it. We have reviewed the staff response to the non-concurrence. And this is our conclusion." I think we can do that.

MEMBER BANERJEE: I think the guy needs a chance to address the Committee.

CHAIRMAN RAY: All right. That's consistent with what you are saying, right?

MEMBER SHACK: Since we are an open public forum, as a FACA committee, you know, this is a fairly unusual circumstance. I think you just need to have it on the record, full Committee.

MEMBER ARMIJO: And we can't have everything. We can't do all that stuff in one day.

MEMBER BANERJEE: I mean, there's a lot of stuff we do which is not that high priority. We can put it off to later, do it another time, do it in the January meeting. I don't think we have to -- we should make enough time to --

CHAIRMAN RAY: All right. Where you guys are taking this is it seems to me we have to choose, then, between 191 and the amendment to do in December. Maybe we can do part of the amendment in 191, but it sure as heck is clear that we are not going to do both of them in three hours.

MEMBER BANERJEE: What are we doing in December which is higher priority than this?

CHAIRMAN RAY: I tried to say nothing, but I didn't prevail.

MEMBER ARMIJO: We have a Federal Register notice.

MR. SANTOS: We added the January full Committee meeting knowing that if it wasn't complete

in December, it was going to be --

CHAIRMAN RAY: It is complete, Tanny. We can't get it before the full Committee in three hours or four hours. That's the problem. It isn't that it isn't complete.

MR. SANTOS: That's why we added January. We needed more full Committee time. I thought that's why we added January.

MEMBER ARMIJO: That was the --

CHAIRMAN RAY: But the January date I believe we need to separate two things. Are we not ready in December or do we not have enough time in December?

Now, for me the January date was because we thought we might not be ready in December. And that could still be true. But if we are ready in December, then the question is, do we have enough time in December given that we are ready in December?

MR. SANTOS: Right. But we always planned on having these other topics at the December meeting. And, you know --

CHAIRMAN RAY: Without doubt.

MR. SANTOS: -- all the other topics that --

CHAIRMAN RAY: Okay. The Federal Register

notice is out?

MR. SANTOS: It's out.

CHAIRMAN RAY: Then that's it. We're off until January for at least part of this. There's no way in the world that we can get it done in three hours.

MEMBER ARMIJO: You can get GSI-191 done, clean, one clean big issue.

CHAIRMAN RAY: But I think it --

MEMBER SHACK: Do we want to take the whole day and just not make the --

MEMBER BANERJEE: Or you can have the amendments --

MEMBER SHACK: -- letters until January? We'll come back and write the letters in January.

CHAIRMAN RAY: Meaning what -- I mean, you're talking about just extending the afternoon meeting?

MEMBER SHACK: Yes.

CHAIRMAN RAY: Well, that's not going to be enough according to what you guys are all telling me.

MEMBER BROWN: Including time --

MEMBER SHACK: Two days. I mean, we have all afternoon on the first day. What is scheduled on

the second day?

MR. SANTOS: A couple of more briefings in the morning. And the afternoon is just the P&P and letter writing, that kind of stuff.

MEMBER BLEY: Can you move it to another day without a Federal Register notice, then?

MEMBER BANERJEE: They can't move anything.

MEMBER SHACK: You can make a change.

MEMBER BLEY: Yes.

CHAIRMAN RAY: We're not moving a session, as I understand it. It would be that we just don't allow time to write. We do lots of stuff, but we wouldn't get the letter written is the problem.

MEMBER SHACK: Although I think I like your arrangement better, where we just pick one of the -- you know, we either pick the license amendment or GSI-191 and we come back in January for the rest.

CHAIRMAN RAY: Well --

MR. CUMMINS: So just a comment.

CHAIRMAN RAY: Yes?

MR. CUMMINS: This affects the rulemaking schedule. And you can be sure that there will be lots of phone calls.

CHAIRMAN RAY: Yes.

MS. McKENNA: Yes. I mean, I think it's true that --

MR. CUMMINS: I mean, if we're ready and we're not able to do it, there will be phone calls from everybody.

MS. McKENNA: We need both --

CHAIRMAN RAY: I appreciate the input, but I didn't have any doubt about that.

(Laughter.)

CHAIRMAN RAY: Wait, wait. Let's listen to Eileen.

MS. McKENNA: What I was saying, I think the point is that in order to move forward with the rulemaking, we need both letters because the GSI is part of the scope of the amendment. So we can't put that off.

CHAIRMAN RAY: Yes. I mean, but you can put it off and just not complete the rulemaking until January.

MS. McKENNA: But that is the schedule question --

CHAIRMAN RAY: All right. Listen --

MS. McKENNA: -- that was brought up that we're going to have to --

CHAIRMAN RAY: Do you have anything to

suggest given that there is a Federal Register notice out that says that we're going to do this all in three hours?

MEMBER ARMIJO: No. I think we would look bad.

MEMBER SHACK: I think we can redo the Federal Register notice. I mean, if it comes to that --

MEMBER BANERJEE: I don't see why we need to deal with RAMONA, why we can't put that off or safety culture.

CHAIRMAN RAY: Okay. But it requires a change, Sanjoy. That's all. The problem is --

MEMBER BANERJEE: Change it, then.

CHAIRMAN RAY: All right.

MEMBER BANERJEE: Change it.

CHAIRMAN RAY: They couldn't tell when they issued the FRN that we would be ready. We couldn't tell until we went through these three days that we thought we would be ready.

MEMBER BANERJEE: No. We didn't know.

CHAIRMAN RAY: That's right.

MEMBER BANERJEE: So we have to be flexible. Now we know. So we change the FRN. That's it.

CHAIRMAN RAY: Tanny, do you want to say something?

MR. SANTOS: Briefings on those other topics but then defer those letters for those other topics to another one?

MEMBER ARMIJO: No. No. We need the time. We need the time, Tanny. We can't work 24 hours a day.

CHAIRMAN RAY: You're looking at --

MEMBER ARMIJO: No.

CHAIRMAN RAY: -- more than me here.

MEMBER ARMIJO: There are some license renewals on there.

MR. SANTOS: Yes.

MEMBER BANERJEE: No. License renewal is a different thing.

MR. SANTOS: It would hold up certain phone calls.

MEMBER BANERJEE: Leaving aside, why do we need to hear about safety culture and RAMONA?

MEMBER BLEY: Well, I can tell you about the safety culture, but we could cut it back probably to an hour because there is an SRM out requiring the staff respond to the Commission with the new policy statement on safety culture. So they have to get a

letter off, and we have to have reviewed it. I think we could get by with an hour on that.

MR. SANTOS: It was scheduled for an hour and a half. So that just buys you --

MEMBER BLEY: That only buys a half an hour.

MEMBER BANERJEE: And do we have to write a letter?

MEMBER BLEY: We have to, yes.

MEMBER SHACK: Well, are have tos and have tos.

MEMBER ARMIJO: There are going to be impossible lists of have tos.

CHAIRMAN RAY: All right. I'm telling you --

MR. KRESS: Why don't you add another day to the meeting at the front end.

CHAIRMAN RAY: Well, that's the first of December. That's when we were going to do --

PARTICIPANT: That's a Subcommittee meeting.

MEMBER BONACA: We can't because it's already --

MR. SANTOS: Unless you want to have the Sunday. That's the only day we could add.

MEMBER BANERJEE: I'm not going to be here. I'm going to be in Norway.

CHAIRMAN RAY: You're not going to be here, in Norway, on Thursday and Friday?

MEMBER BANERJEE: No.

CHAIRMAN RAY: And I hope you're not going to be there on Wednesday.

MEMBER BANERJEE: No.

CHAIRMAN RAY: All right.

MEMBER BANERJEE: Wednesday, Thursday, and Friday I am here.

CHAIRMAN RAY: Well, I guess we have done all we can do here. Look, we have, we and the applicants and the staff have, all worked very hard to get to the point where at least we have a shot at, no guarantees, a shot at, writing a letter on the amendment and on 191. And everybody saying three hours, four hours, five hours isn't going to be enough.

MR. DIAS: Here's a question. Do you need hours in the briefings or the full Committee or do you need hours to actually be able to write a letter?

CHAIRMAN RAY: Both.

MR. DIAS: Both.

CHAIRMAN RAY: Both but --

MS. McKENNA: Basically the whole --

CHAIRMAN RAY: Right now it's the briefing that everybody thinks is going to be --

MR. DIAS: You can only have three hours for the briefing.

CHAIRMAN RAY: Yes. And everybody is saying you need a day, Antonio.

MR. DIAS: Before the full Committee, wow. Okay.

CHAIRMAN RAY: But I said that several times. It's going to take a whole meeting to go through this.

MEMBER BANERJEE: There's a concurrence issue, right?

CHAIRMAN RAY: Yes. You could say the non-concurrence was the reason it would add at least a couple of hours by the time all the handering is done.

MR. SANTOS: Thursday AP1000 and move the other two items to Friday for just briefings?

CHAIRMAN RAY: That would be an improvement, I think. Don't you guys think?

MEMBER SHACK: Oh, yes, that would be a big improvement, I think. I mean, that's doable.

CHAIRMAN RAY: I mean, if we could take all day Thursday and then let the chips fall where

they may on Friday, I mean, I would be happy. Sanjoy would be happy. And we would have a shot at it. So go see if you can do that, would you, then, please?

MEMBER SHACK: The letter on RAMONA I think we would put off.

MR. DIAS: That's what I was thinking. We could move that --

MEMBER SHACK: To January.

MR. DIAS: -- possibly to January.

MEMBER SHACK: But you're saying we can't do that with the safety culture.

MEMBER BLEY: I'm not sure of the exact date on safety culture.

MR. DIAS: But I will check that.

MEMBER BLEY: I think that would be an easy letter.

MR. DIAS: Right now we can do it, safety culture. I'm going to check if we can move it to January. Okay.

MEMBER BONACA: Can we switch the meeting to Saturday afternoon late?

MR. DIAS: The meeting, right now the agenda ends at 3:30 on Saturday already because we have quite a few letters. That's the problem.

MEMBER BROWN: We only have amendment,

GSI-191, and KIWANI. That's three letters, isn't it?

MEMBER ARMIJO: And there's emergency preparedness. There have been Subcommittee. Jack is ready with a letter on that.

CHAIRMAN RAY: Yes, but something has got to give.

MEMBER ARMIJO: I know. It's impossible.

CHAIRMAN RAY: Well, but that could give without any disastrous consequences, right?

MEMBER ARMIJO: You know, all of this has got to be addressed at one time.

MEMBER SHACK: The staff I think has to -- you know, that is an NRC decision on their priorities here. You know, the --

CHAIRMAN RAY: Yes. Let them have these phone calls that Ed is referring to and tell us what the answer is.

MR. CUMMINS: We'll be happy to call anybody.

(Laughter.)

9. CLOSING REMARKS

CHAIRMAN RAY: All right. Enough said. We're going to bring this to an end here now. I guess what I would say is I've cut the record on this because we are saying that we think with one more day,

Subcommittee day, on December 1st, that it's likely we would have the issues resolved that would enable us to write a letter, but we need a full day to present all of the information to the full Committee.

Right now there isn't a full day allowed. There is only an afternoon. And, therefore, we have made a request to take a full day on Thursday. We will have to see if that can be done. And everybody will be so advised.

And anybody who thinks they can help make that decision the right way, they're free to do whatever they think they can do. Okay?

Anything else that we need to talk about? It's a quarter to 5:00.

MEMBER BANERJEE: Just one question.

CHAIRMAN RAY: Yes?

MEMBER BANERJEE: We are going to shoot to do if we find enough time both letters.

CHAIRMAN RAY: Yes.

MEMBER BANERJEE: So we should prepare for both in that case.

MEMBER BROWN: It sounds like we have to. They go hand in hand.

CHAIRMAN RAY: That's right.

MEMBER BANERJEE: So that means that we

have to draft the letters in advance.

CHAIRMAN RAY: That's why I gave you what I had been working on for 191 a few minutes ago. And Weidong and I are going to have to work through Thanksgiving week to try and draft the amendment letter.

Weidong, you're not taking the week off, are you?

MR. WANG: Not a week. I can work overtime.

CHAIRMAN RAY: And I'd ask for input from these guys over here. Okay?

MR. WANG: Yes.

CHAIRMAN RAY: All right. Anything else? We'll keep you informed of the outcome on this, but at least right now we have made a request that the full Committee have the entire day Thursday.

MEMBER SHACK: I think I'll go make some changes in my airplane reservations.

MEMBER BLEY: Saturday.

MEMBER SHACK: No. Like Sunday.

MEMBER BLEY: Sunday I meant, the Saturday reservations to Sunday.

CHAIRMAN RAY: With that, we are adjourned.

(Whereupon, the foregoing matter was concluded at 4:47 p.m.)

United States Nuclear Regulatory Commission

Protecting People and the Environment

Presentation to the ACRS Subcommittee

Westinghouse AP1000 Design Certification Amendment Application Review

SER Chapter 23
Design Changes Proposed In Accordance With Interim Staff Guidance 11

November 19, 2010

Chapter 23 Review Team

Technical Staff

- **John Budzynski**, Technical Reviewer, SRSB/DSRA
- **Hien Le**, Technical Reviewer, CTSB/DCIP
- **Michelle Hayes**, Technical Reviewer, SPCV/DSRA

Project Manager

- **Brian Anderson**, Project Manager, NWE1/DNRL

Chapter 23 Overview

- Not previously issued as an SER with open items.
- Evaluates most of the proposed design changes that were submitted subsequent to DCD, Revision 17 and that satisfy one or more of the criteria of Interim Staff Guidance 11 (ISG-11).
- ISG-11, in part, describes categories of design changes that should not be deferred until after the issuance of the design certification rule.
- Categories of those changes include:
  - correction of significant errors
  - changes to ensure compliance with NRC regulations
  - changes to support other licensing-basis documents
  - significant technical corrections associated with the design
  - changes needed to address significant vulnerabilities identified by probabilistic risk assessments or other studies

Section 23.L – Changes to Passive Core Cooling System Injection Lines

- Proposed design changes address gas intrusion concerns

- Design changes include:
  - Addition of manual vent valves and manual drain valves
  - Addition of pipe stubs and remote gas void indications
  - Re-routing of accumulator discharge line connections
  - Revision of Technical Specifications 3.5.6, 3.5.7, and 3.5.8 for controls of operations of the IRWST in operating Modes 1- 4 and shutdown Modes 5 and 6

Section 23.L – Changes to Passive Core Cooling System Injection Lines

Component	Number Added	Location
manual maintenance vent valves	**8**	6 passive injection and recirculation line piping high point locations
pipe stubs	**4**	-line routing to tee into CMT vent line routing to the RCDT -outlets of each of the IRWST passive injection squib valves
manual maintenance drain valves	**20**	-14 PXS passive injection and recirculation piping locations -5 RNS piping locations -1 RCS piping location Note: RNS & RCS not related to gas intrusion

Section 23.L – Changes to Passive Core Cooling System Injection Lines

The staff's evaluation of these proposed design changes assessed:

- Proposed placement of high point vents and low point drains
  - P&IDs against pipe routing isometrics
- Identify gas intrusion mechanisms
  - Valve leakage & accumulator leakage (nitrogen blanket)
- Surveillance and venting procedures
  - Technical Specifications
  - Operations procedures
- Component acceptance criteria
  - GDC 2 & GDC 4
- ITAAC & Startup Testing not affected by the changes

Section 23.L – Changes to Passive Core Cooling System Injection Lines

- **Conclusions**
  - AP1000 design, testing, and NRC staff historical confirmatory testing demonstrated passive safety systems are not susceptible to any adverse effects from gas intrusion:
    - Would not significantly degrade safety system performance
    - Would not adversely impact plant safety following design basis events
  - AP1000 passive safety systems are not susceptible to the pump-related mechanisms:
    - Gas binding of suction piping
    - Destructive water hammer from rapid fluid flow changes once a pump is started

Section 23.S – Changes to the Passive Containment Cooling System

- The revised shield building increased resistance in the Passive Containment Cooling System natural circulation air flow path, resulting in the following DCD changes:
  - Lower required reactor decay heat limit for air only cooling
  - Increase spent fuel pool thermal capacity
  - Reduce minimum post-72 hour PCCWST flow rate supply to containment when plant is being refueled
- Design changes include revisions to Technical Specifications 3.3.2-1, 3.3.5-1, 3.6.7, and 3.7.9 to reflect the revised requirement for the minimum calculated reactor decay heat at Modes 5 and 6 as a result of the reduction of air flow through the Shield Building annulus

Section 23.S – Changes to the Passive Containment Cooling System

- Applicant evaluated impact of changes on qualification testing with a new Air Flow Characterization Test
- Applicant revised WGOTHIC models to demonstrate:
  - Negligible impact to design basis LOCA and Main Steam Line Break events
  - Containment pressure remains below design value for seven days with air only cooling if reactor decay heat is at or below 6 MWt
  - For beyond design basis accident event of a loss of offsite power concurrent with loss of PCS water, containment pressure remains below maximum pressure capability for 24 hours
  - Containment pressure remains well below design value for seven days following loss of power event concurrent with start of refueling when post-72 hour PCCWST flow rate supply to containment is 80 gpm

Section 23.S – Changes to the Passive Containment Cooling System

- The staff's evaluation of these proposed design changes included:
  - Audits of Westinghouse calculations
  - Confirmatory analyses using CONTAIN
    - Double-ended cold leg LOCA
    - Air Only Cooling with 6 MWt decay heat
    - Beyond Design Basis Accident 24 hour air only cooling
    - 80 gpm water flow during refueling Design Basis Accident

Section 23.S – Changes to the Passive Containment Cooling System

- **Conclusions**
  - Proposed changes are compliant with:
    - GDC 16, 38, 50
    - 10 CFR 50.47(c)(2) as it relates to design certification testing in support of a passive plant design

United States Nuclear Regulatory Commission

Protecting People and the Environment

Presentation to the ACRS Subcommittee

Westinghouse AP1000 Design Certification Amendment Application Review

SER Chapter 23
Design Changes Proposed In Accordance With Interim Staff Guidance 11

November 19, 2010

Chapter 23 Review Team

Technical Staff

- **Hien Le**, Technical Reviewer, CTSB/DCIP
- **Jack Zhao**, Technical Reviewer, ICE/DE
- **Michelle Hayes**, Technical Reviewer, SPCV/DSRA
- **Anne-Marie Grady**, Technical Reviewer, SPCV/DSRA
- **James Strnisha**, Technical Reviewer, CIB/DE
- **Larry Wheeler**, Technical Reviewer, SBP/DSRA

Project Manager

- **Brian Anderson**, Project Manager, NWE1/DNRL

Section 23.W – Changes to Add a Vacuum Relief System to the Containment

- Proposed design changes
  - Add a vacuum relief system to the containment to prevent external differential pressure between containment and the shield building from exceeding the design value
  - Reduce external pressure design limit from 2.9 psid to 1.7 psid
  - Add Technical Specification 3.6.10, Vacuum Relief Valves, to provide assurance these components will adequately perform their functions.

Section 23.W – Changes to Add a Vacuum Relief System to the Containment

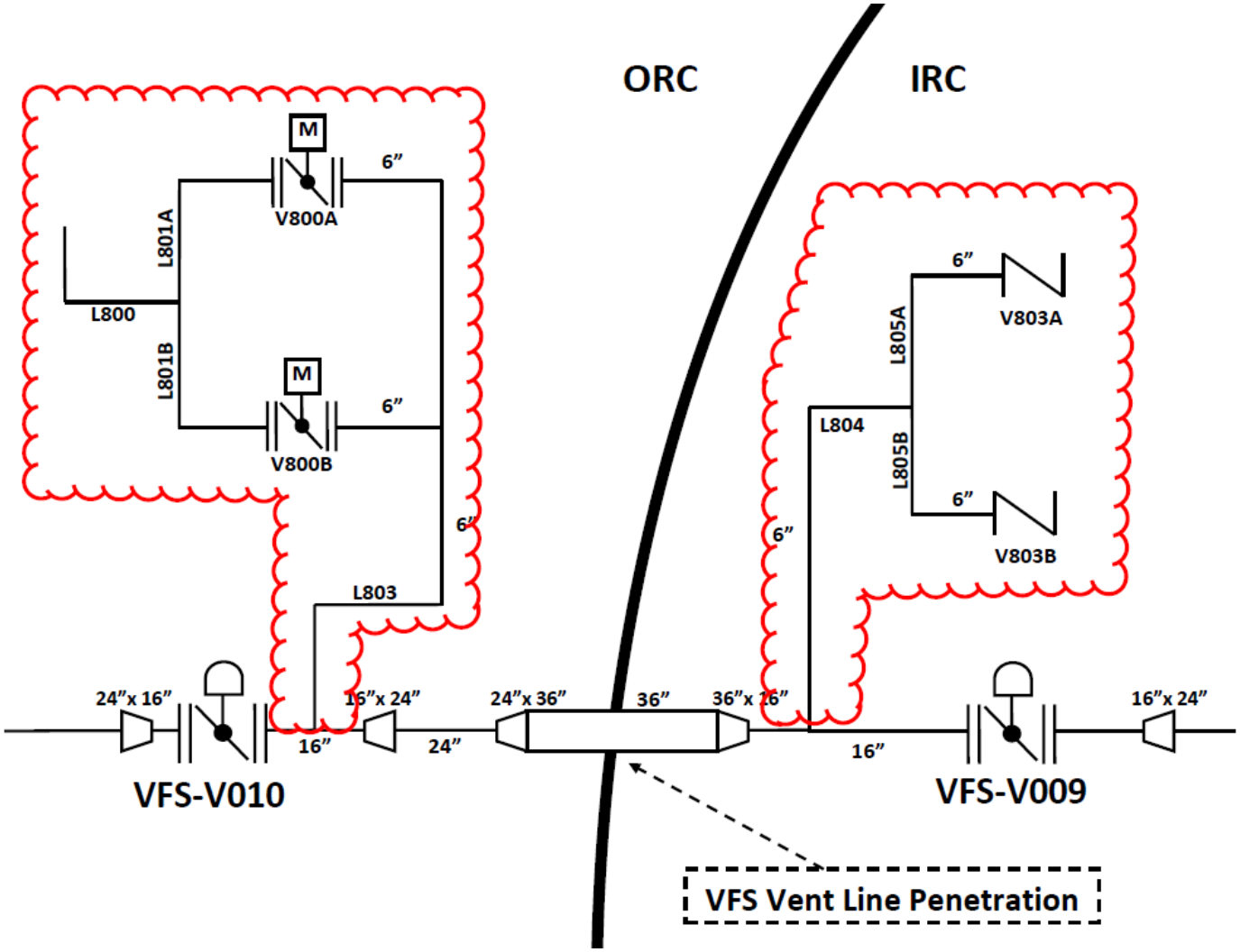

Section 23.W – Changes to Add a Vacuum Relief System to the Containment

- The staff's assessment of the proposed design changes included:
  - System Design and Analyses
  - Containment Isolation and Leak Rate Testing
  - Valve Design, Qualification, and Testing
  - Instrumentation and Control
  - Technical Specifications

Section 23.W – Changes to Add a Vacuum Relief System to the Containment

- System Design and Analyses
  - Westinghouse revised WGOTHIC model to incorporate vacuum relief system and remove non-mechanistic assumptions
  - Westinghouse analyses:
    - Demonstrated vacuum relief system maintains containment pressure within design value
    - Confirmed limiting event remains Loss of AC on cold day
  - Staff's evaluation included
    - Review of assumptions, methodology, and supporting calculations
    - Confirmatory calculations with CONTAIN model
- Staff concludes that analyses comply with GDC 16
  - Most severe transient was analyzed
  - Analysis was done in a conservative manner

Section 23.W – Changes to Add a Vacuum Relief System to the Containment

- Containment Isolation and Leak Rate Testing
  - Vacuum relief design has two flow paths which connect directly with the containment atmosphere and penetrate the primary containment
  - This design complies with the requirements of GDC 56 by providing each vacuum relief device with a check valve inside containment and a motor operated butterfly valve outside containment
  - This design complies with the 10 CFR 50.34(f)(2)(xiv)(B) redundancy requirement. If a check valve failed to close during an accident, the MOV in series with it would close on a “T” signal, thereby providing containment isolation

Section 23.W – Changes to Add a Vacuum Relief System to the Containment

- Containment Isolation and Leak Rate Testing
  - On the basis of its review of the containment isolation design of the proposed vacuum relief design, the staff concludes that the design complies with the acceptance criteria in Section 6.2.4 of the SRP, including 10 CFR 50.34(f)(2)(xiv), “Additional TMI-Related Requirements,” and the CSB BTP 6-4, "Containment Purging During Normal Plant Operations”
  - On the basis of its review the staff concludes that the proposed addition of the vacuum relief valves to the already certified AP1000 containment leakage rate testing program complies with the acceptance criteria of Section 6.2.6 of the SRP

Section 23.W – Changes to Add a Vacuum Relief System to the Containment

- Valve Design, Qualification, and Testing
  - Butterfly Valves VFS-PL-V800A/B
    - 6-inch butterfly valve with offset disc
    - Motor-operated from separate Class 1E battery source
    - Capacity coefficient and stroke time for full flow capacity
    - Will be qualified in accordance with ASME QME-1-2007 per RG 1.100 (Rev. 3)
  - Check Valves VFS-PL-V803A/B
    - 6-inch horizontally installed check valve with swing disc
    - Open at preset differential air pressure
    - Valve flow capacity
    - Will satisfy ASME BPV Code, Section III, Subsection NC-7000 for vacuum relief valves

Section 23.W – Changes to Add a Vacuum Relief System to the Containment

- Valve Design, Qualification, and Testing
  - ITAAC
    - AP1000 DCD Tier 1, Section 2.2.1, “Containment System,” will be revised to include butterfly valves VFS-PL-V800A/B and check valves VFS-PL-V803A/B
    - Table 2.2.1-3 specifies ITAAC for the containment system, and will be revised to specify butterfly valve closing time
    - Table 2.7.6-2 for the containment air filtration system will include new ITAAC for butterfly valve opening time
  - Conclusions
    - Design and qualification for butterfly valves VFS-PL-V800A/B and check valves VFS-PL-V803A/B meet ASME BPV Code and ASME QME-1-2007 per RG 1.100 (Rev. 3)
    - Valve IST activities meet 10 CFR 50.55a and ASME OM Code

Section 23.W – Changes to Add a Vacuum Relief System to the Containment

- Instrumentation and Control
  - Functional logic added to Protection and Safety Monitoring System to automatically control the two new vacuum relief MOVs
  - Manual control function and status indication in main control room also added for the two new vacuum relief MOVs
  - The staff concludes that the proposed changes comply with relevant requirements in GDC 13, 19, 20, and 21

Section 23.W – Changes to Add a Vacuum Relief System to the Containment

- Technical Specifications
  - Addition of a Low-2 containment pressure trip function to TS Table 3.3.2-1 for opening of the motor-operated vacuum relief valves
  - Addition of TS 3.6.10 for controls of the Vacuum Relief System
  - Revision to TS 3.6.4 and TS 3.6.5 in support of the new TS 3.6.10 requirements
  - On the basis of its review, the staff concludes that technical specifications are adequately addressed

Section 23.V – Changes to the Component Cooling Water System

- Proposed design changes to CCS piping arrangement and isolation signals to prevent a tube rupture in the RCP cooling water heat exchanger from overpressurizing CCS outside of containment

- Design changes include:
  - Modification of CCS piping
  - Modification of containment isolation valve closure logic
  - Addition of Technical Specification 3.3.2 ESFAS instrumentation function to provide CCS isolation inside containment in the event of a heat exchanger tube leak
  - Modification of RCP heat exchanger outlet isolation valve closure logic

Section 23.V – Changes to the Component Cooling Water System

- Modifications to CCS piping
  - Addition of two 4-inch x 6-inch ASME safety-class relief valve (CCS-PL-V270 and CCS-PL-V271) on the 10-inch CCS supply and return lines, respectively; just inside the innermost containment isolation valves
  - Changed the pipe safety class between the innermost containment isolation valves and the Appendix J test valves (CCS-PL-V214 and CCS-PL-V216) from Class ‘0’ to Class ‘C’ to ensure that the relief valves are installed as ASME safety-class piping

Section 23.V – Changes to the Component Cooling Water System

- Modification to the closure logic for CCS motor-operated containment isolation valves CCS-PL-V200, CCS-PL-V207, and CCS-PL-V208
  - Additional closure on generation of the RCP bearing water high temperature pump trip signal
    - Addition of an RCP bearing water temperature high signal for closure of CCS containment isolation valves to Technical Specifications Table 3.3.2-1
  - Derived from a 2 out of 4 of the four divisions of high RCP bearing water temperature for any reactor coolant pump
  - Additional closure logic implemented in the protection and safety monitoring system

Section 23.V – Changes to the Component Cooling Water System

- Modification to CCS RCP Heat Exchanger outlet isolation valves (CCS-PL-V256A/B/C/D)
  - Removal of automatic closure logic (based on high delta of inlet to outlet flow) from the nonsafety-related plant control system, but manual control from main control room is retained
  - High delta flow between the inlet and outlet lines would generate a flow deviation alarm to alert plant operators
  - New alarm indicates RCS leak conditions; upon which operators would close the valve on the cooling water outlet line on each RCP
  - Flow signals and outlet isolation valves are nonsafety-related

Section 23.V – Changes to the Component Cooling Water System

- Conclusions
  - CCS piping system is adequately protected from over-pressurization due to a postulated RCP external heat exchanger tube rupture
    - Two ASME Section III Class 3 relief valves
    - Both relief valves would see the overpressurization event
    - Limits CCS to ~200 psig
  - Containment isolation valves close on sensed RCP high bearing water temperature
    - Staff RELAP analyses confirm containment isolation valve closure within AP1000 piping classification of 300 F/230 psig (JCB & JCC)
    - Containment isolation valve closure occurs within a few minutes with RCS near 200 F

Section 23.V – Changes to the Component Cooling Water System

- Conclusions
  - During a postulated RCP external heat exchanger tube rupture, the proposed design meets all applicable NRC regulations
  - Will not adversely affect safety related SSCs
  - CCS will still perform defense in depth and RTNSS functions
  - Technical Specifications are adequately addressed
  - Provides new containment isolation signal
  - Maintains containment integrity
  - Prevents Inter System LOCA

Acronyms

- CCS - Component Cooling Water System
- CMT - Core Makeup Tank
- ESFAS - Engineering Safety Feature Actuation System
- IRWST - In-containment Refueling Water Storage Tank
- PCCWST - Passive Containment Cooling Water Storage Tank
- PXS - Passive Core Cooling System
- RCDT - Reactor Coolant Drain Tank
- RCS - Reactor Coolant System
- RNS - Normal Residual Heat Removal System
- RTNSS - Regulatory Treatment of Non Safety Systems
- VFS - Containment Air Filtration System

ACRS Meeting
AFSE 23.W – CN 74
AP1000 Containment Vacuum Relief System

November 2010

Chuck Brockhoff Nuclear Systems Design

Gary Sedlacek HVAC Systems Design Lead

AP1000™

Westinghouse

Vacuum Relief Piping Arrangement

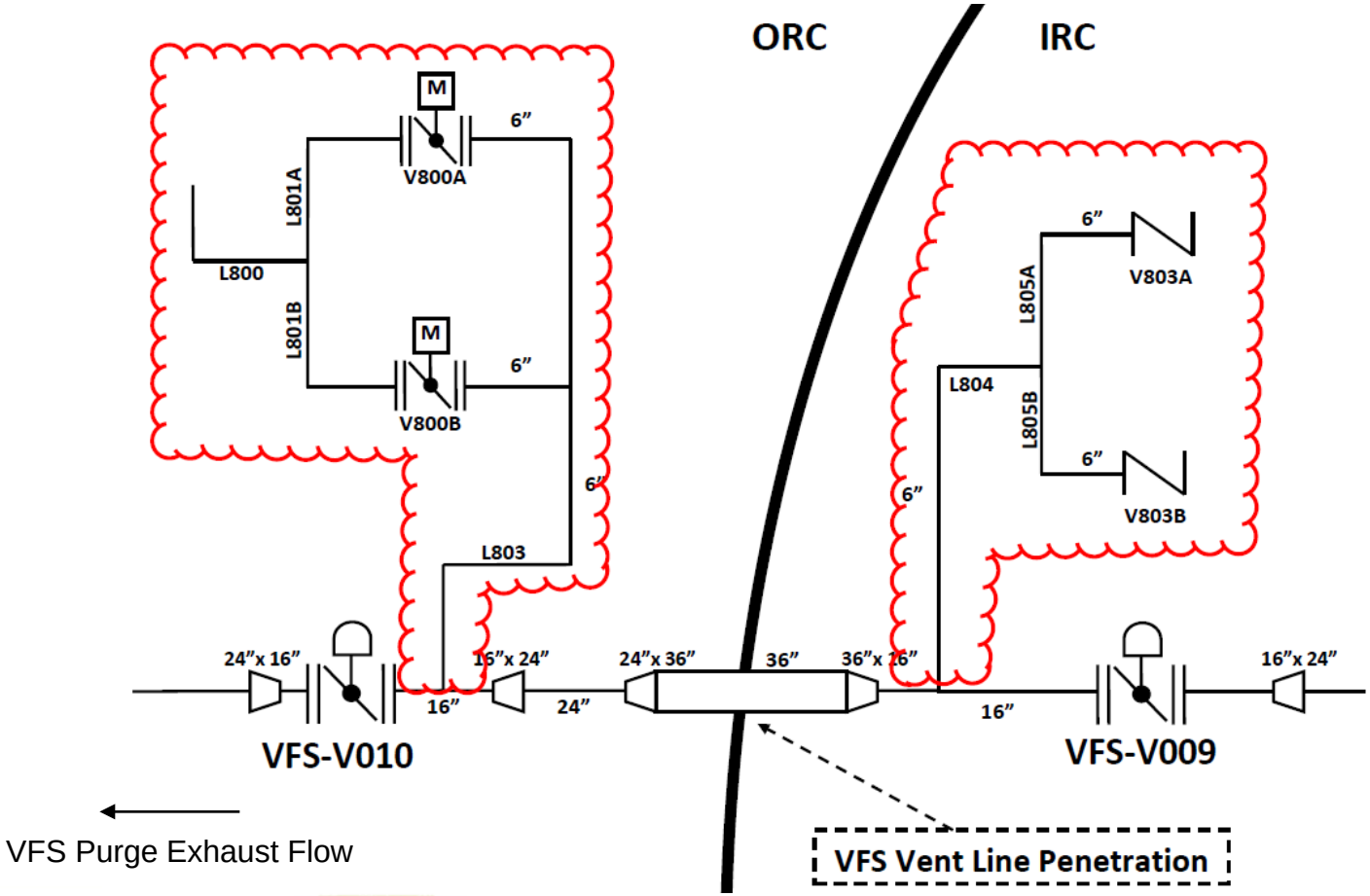

Addition of a Vacuum Relief System

- A containment overcooling event was identified which required the addition of a safety-related containment vacuum relief system

- Added redundant safety-related 6-inch vacuum relief valves that share a flow path through the existing VFS containment purge exhaust penetration
  - Satisfies ASME Code Section III Division 1 NE-7152 (Vacuum Relief Devices)
  - Added new Tech Spec 3.6.10 (similar to NUREG-1431 Tech Spec 3.6.12)
  - Added 2 MOV butterfly valves <u>outside</u> Containment and 2 check valves <u>inside</u> containment (active valves require in-service testing per DCD 3.9.6)
  - Automatically open MOVs from Class 1E batteries on low containment pressure (safeguards actuation requirements added to Tech Spec 3.3.2)
  - Vacuum relief actuation has priority over containment isolation
  - DBA is a cold front that overcools containment (trip / loss of ac limiting)
  - The CV design external pressure is determined to be -1.7 psig (Service Level A/D)
  - Valve arrangement similar to current plants [CE 2-loop/ W 2-loop]

- Evaluated Transient Analyses / System Design / ASME Code / CV shell design