Official Transcript of Proceedings

NUCLEAR REGULATORY COMMISSION

Title: Advisory Committee on Reactor Safeguards
Subcommittee on AP1000 - Open Session

Docket Number: (n/a)

Location: Rockville, Maryland

Date: Wednesday, February 3, 2010

Work Order No.: NRC-044 Pages 1-190

NEAL R. GROSS AND CO., INC.
Court Reporters and Transcribers
1323 Rhode Island Avenue, N.W.
Washington, D.C. 20005
(202) 234-4433

UNITED STATES OF AMERICA

NUCLEAR REGULATORY COMMISSION

+ + + + +

ADVISORY COMMITTEE ON REACTOR SAFEGUARDS

(ACRS)

SUBCOMMITTEE ON AP1000 - OPEN SESSION

+ + + + +

WEDNESDAY, FEBRUARY 3, 2010

+ + + + +

ROCKVILLE, MARYLAND

The Subcommittee met at the Nuclear Regulatory Commission, Two White Flint North, Room T2B1, 11545 Rockville Pike, at 10:00 a.m., Harold Ray, Chairman, presiding.

SUBCOMMITTEE MEMBERS:

HAROLD B. RAY, Chair

SAID ABDEL-KHALIK

J. SAM ARMIJO

SANJOY BANERJEE

DENNIS C. BLEY

MARIO V. BONACA

CHARLES H. BROWN, JR.

MICHAEL T. RYAN

WILLIAM J. SHACK

JOHN W. STETKAR

CONSULTANTS TO THE SUBCOMMITTEE:

THOMAS S. KRESS

GRAHAM B. WALLIS

NRC STAFF:

PETER WEN, Designated Federal Official

WEIDONG WANT

STEPHANIE COFFIN

DON HABIB

GENE HSII

MICHELLE HART

MARK CARUSO

MALCOLM PATTERSON

ALSO PRESENT:

EDDIE GRANT

WES SPARKMAN

ED CUMMINS

AMY AUGHTMAN

MARK WILLIAMS

ROB SISK

BOB HIRMANPOUR

BOB PRUNTY

JILL MONAHAN

TERRY SCHULTZ (via telephone)

DALE WISEMAN

TABLE OF CONTENTS

P R O C E E D I N G S

Time: 9:59 a.m.

CHAIRMAN RAY: The meeting will now come to order. This is the second day of a two-day meeting of the AP1000 Reactor Subcommittee, a standing subcommittee that advises the Committee on reactor safeguard.

I am Harold Ray, Chairman of the Subcommittee. ACRS members in attendance are Mario Bonaca, Dennis Bley. We have John Stetkar, Sam Armijo, Bill Shack, and Charles Brown and Mike Ryan. We will be joined by Said Abdel-Khalik a little later in the morning, and perhaps one or two others.

We also have at the table with us ACRS Consultants Tom Kress and Graham Wallis. We have in the audience Professor -- doggone it, I did have it. I apologize. I am going to get this sooner or later.

MEMBER SHACK: He just came in.

CHAIRMAN RAY: Stovadimovic from Berkeley. He will be observing us and joining us at the table in a subsequent meeting. Also present: Peter Wen is the Designated Federal Official for this meeting, and he is joined by ACRS staff member Weidong Wang.

The purpose of this subcommittee meeting over this second day will be to continue with reviews and

discussions concerning design control document 17 of the AP1000 Pressurized Water Reactor and standard contents of the Reference Combined Operating License Application. I emphasize those words, Standard Contents of the Reference Combined Operating License Application, because the site-specific contents will not be part of the agenda today.

We had a two-day AP1000 Subcommittee meetings in July, October and November of last year. Except for DCD Sections 3.7, 3.8 and Chapter 6, this February meeting will complete the initial reviews for the SER with open items for both the DCD and the Combined License reviews.

For that reason, I want to be particularly careful at the end of today's agenda to go over the action items. Weidong will provide us those. I guess Eileen from the staff may be the source, but in any event, we want to go over that to make sure that this initial review we have all the members' action items that remain open identified accurately.

During today's meeting we will hear presentations from the NRC staff, Westinghouse, Southern Nuclear Operating Company and NuStart. We have received no written comments or requests for time to make oral statements from members of the public

regarding today's meeting.

We have a revised agenda as a result of one carryover item to today's agenda from yesterday that we weren't able to complete, despite the fact that we went until six o'clock. That item is -- I trust everyone has access to the revised agenda that we will be following today. It is Item 6.

That portion of the meeting will be closed, as indicated on the agenda, and the rules for a closed meeting I described yesterday, but they are that only NRC staff, applicants, and those who are contractually obligated to confidentiality with the applicants can attend during closed sessions of the meeting.

As I say, the agenda currently shows just that one item that is being taken up right after lunch as Closed Session.

All right. Well, in any event, agendas will continue to be revised as the need develops, I guess, and this last one acknowledges that we start at ten.

I am told that our deferred start time was a benefit to at least one of our members who has not otherwise been able to get here on time. So I guess it was a good idea, but things have changed in a century since I lived here. It would have shut the

town down back then, but it didn't seem to have that big an impact, the weather.

So the Subcommittee will gather information, analyze relevant issues of the facts, and formalize proposed positions and actions as appropriate for deliberation by the full Committee. Rules for participation in today's meeting have been announced as part of the notice of the meeting previously published in the Federal Register.

A transcript of the meeting is being kept and will be made available as stated in the Federal Register Notice. Therefore, we request that participants in this meeting use the microphones located here in the meeting room when addressing the Subcommittee. Participants should first identify themselves and speak with sufficient clarity and volume so that they may be readily heard.

With that, I believe we are ready to proceed. Eddie, you got the gavel, or who is in charge here of this segment?

MR. GRANT: I have the mouse, but Wes Sparkman with Southern Nuclear, I believe, is up.

CHAIRMAN RAY: All right. Very good.

MR. SPARKMAN: Good morning. Wes Sparkman. I am with Southern Nuclear, Vogtle 3&4

Project. To my right is Bob Hirmanpour, and to my left is Eddie Grant. We also have Mark Williams from Westinghouse off to the right to help us out with any questions that the ACRS might have.

We are covering Chapter 13, again the standard portions: 13.1, organizational structure of applicant, plant specific, and we are not intending to go into any detail on that. We do intend to cover briefly 13.2, which is training; 13.4, operational programs; and 13.5, plant procedures. Next slide.

The DCD is incorporated by reference. There is only one standard departure taken, and that is for section numbering, which I believe you all probably have seen in previous chapters.

There are additional supplemental information items that are included in Chapter 13 beyond what is in the DCD and, because of that, some of the numbering has to change. Therefore, we have taken a departure.

The majority of the FSAR Chapter 13 is, as I said before, is plant specific, primarily organizational structure, things like that. The major supplemental information has to do with operational programs milestones, which are included in Table 13.4-201, and then COLD items. Next slide.

There are three standard COL items that we want

to discuss this morning briefly. The first is 13.2-1, which is the training program for plant personnel.

FSAR Section 13.2 provides the training program description, and we are incorporating NEI 06-13A. I don't know if you have had a chance to look at that, but that defines what needs to be in our training program.

With respect to operational programs, COL item 13.4-1, again we discussed earlier, or I said just a minute ago that FSAR Table 13.4-201 lists the operational programs that are required by the NRC regulations. If you look at that table, there is a column that describes what regulation requires that particular program, and then implementation milestones, either by regulation or by license condition.

MEMBER STETKAR: Can I ask you a question about the training programs?

MR. SPARKMAN: Sure.

MEMBER STETKAR: In 13.2, there is a statement that says operators involved in the human factors engineering verification and validation program receive additional specific training for the task of performing V&V.

That training and milestones are not listed in

the table. So I don't have any information about the schedule for either the training or the V&V process. Do you have any information about that training?

MR. SPARKMAN: In terms of schedule, I don't know that a specific schedule has been developed yet. I know that, like for instance, with the simulator, some people that are going to be involved with respect to validating the simulator will have some training prior to that. Eddie, do you have any specifics?

MEMBER STETKAR: This is in particular for the human factors engineering, which should be done well before the simulator is, in fact, constructed.

MR. GRANT: Yes.

MEMBER STETKAR: So I am a bit concerned about when that training will be performed.

MR. CUMMINS: Yes. This is Ed Cummins. First of all, the V&V is in the scope of Westinghouse. So we are doing the V&V of human factors. We have written a procedure, and actually we are redoing it with the staff right as we speak, because it is part of one of the design acceptance criteria that we are trying to close.

The training is done for operating crews who come from customers. The customers provide

operating crews, and we give them a short amount of training on the AP1000 specific and the control room methods. Then we use them as test subjects, and we have three or four crews go through, and we measure, I think the procedure says, three times for each even, and then you record information of errors or improvements as you go through.

That whole process is just about getting ready to start. It is in the next few months that we are going to start that process.

MEMBER STETKAR: Do you have arrangements in place to get operating crews from Southern?

MR. CUMMINS: We do. We are still refining the details on it a little bit, but yes.

MEMBER STETKAR: Okay, that helps. Thanks.

MEMBER BLEY: And the DAC will be closed as part of the design cert?

MR. CUMMINS: The V&V DAC will not be, but the planning of the V&V DAC will be.

CHAIRMAN RAY: Ed, when you said it is within Westinghouse scope, did you mean to say it is part of a DCD or just that it is work that is being done by Westinghouse for its COL licensing customers?

MR. CUMMINS: I think the V&V DAC will

remain a DAC, because it is an extensive program. So it is Westinghouse's responsibility to close that DAC and get whatever inspection, the process that occurs from the staff, to close the V&V DAC on human factors.

The responsibility is really between us and our customers, I suppose, but they would expect to get a control room that has been verified.

CHAIRMAN RAY: I am just trying to figure out whether the requirements that are being met are part of the COL and part of the DCD.

MR. CUMMINS: It isn't part of the certified design or part of the COL. It will be part of a post-inspection, a DAC inspection.

CHAIRMAN RAY: Which are DAC. The DAC are in the COL, though.

MR. GRANT: The answer is yes. The work will be done by Westinghouse. It will be closed on the docket of the particular license.

CHAIRMAN RAY: That is the answer I was trying to get to. In the COL license?

MR. GRANT: It will come from Vogtle to say here is the closure package for the DAC.

CHAIRMAN RAY: Right. And whether you get it from Westinghouse or somebody else is your business.

MR. GRANT: Irrelevant.

CHAIRMAN RAY: Okay. Go ahead.

MR. SPARKMAN: All right. I think we have covered operational programs, and 13.5-1 of plant procedures: FSAR 13.5 describes a variety of different procedures, administrative, other procedures used to conduct routine operating, abnormal, and emergency activities in a safe manner. We have a discussion of that in Chapter 13.5, and we will be producing those procedures as they become necessary, if you have any other questions about the procedures.

All the open items are plant specific. There are no standard open items associated with Chapter 13.

CHAIRMAN RAY: Okay, good. Terse, to the point. Any questions from any members or consultants?

MEMBER ARMIJO: We are not going to discuss anything about 13-6, Security, in this meeting?

CHAIRMAN RAY: That was my understanding, but--

MR. GRANT: Eddie Grant with NuStart. We don't actually have an SER for those two sections yet. There is a short section, but it is basically an open item that says the SER on those topics comes later.

CHAIRMAN RAY: I think you told us yesterday we would be discussing that at a subsequent meeting. Is that right?

MS. COFFIN: Yes. the first time this Subcommittee will see the security views for the AP1000 COL applicants will be in our Phase 5 for the Vogtle --

CHAIRMAN RAY: It will be site specific.

MS. COFFIN: It will be site specific.

CHAIRMAN RAY: All right. Now Amy approached me yesterday and said that there was a response to Member Stetkar's question that was available for review. Is this a good time to look at it?

MR. GRANT: Certainly.

MS. AUGHTMAN: Well, if we could hold until Chapter 15.

CHAIRMAN RAY: All right, Chapter 15 it is. Fine. Thank you.

MR. GRANT: Thank you.

CHAIRMAN RAY: Okay, staff.

MS. McGOVERN: Good morning. I am Denise McGovern, the Chapter 13 Project Manager for the AP1000 Combined Operating License applications. With me today from the Division of Construction Inspection

Programs is Jim Kellum, the lead reviewer for Sections 13.1, 13.2, and 13.5. He is with the Operator Licensing and Human Performance Branch. He will be going over the standard content for 13.2, training, and 13.5, plant procedures. Then I will cover 13.4, Operational Programs.

CHAIRMAN RAY: Very good.

MR. KELLUM: As Denise had said, my name is Jim Kellum. I am from NRO, and I am here to talk about the Chapter 13, Sections 1, 2 and 5. I have actually presented this information previously to this committee several months ago for another one, and I am not going to really provide any additional or different information than what was provided at the previous time we presented this.

CHAIRMAN RAY: Feel free to just whiz right through it then.

MR. KELLUM: Thank you. Like I said, we are talking about Sections 13.1, 13.2 and 13.5. 13.1 is the organizational structure of the applicant, and that is going to be plant specific, and what we have seen from the COLs that have been submitted, they all provide a table that outlines the personnel, the qualifications, etcetera, and in accordance with the ANSI 3.1, which is the selection, training, and

qualification of plant personnel and the subsequent Reg Guide 1.8.

So moving on to Section 13.2, which is training, that is incorporated by reference, and 13.2 -- Largely, what that will follow, it also incorporates by reference NEI 06-13A Rev. 1, which is the template for an industry training program.

Now that template -- or the Rev. 1 change -- I don't know if you saw Rev 0, Rev. 1. the big change in Rev 1 was Rev 1 adds the cold license process. That was one thing that was lacking from the original revision.

So there is an Appendix A that discusses all the cold licensing, since, obviously, nobody has been licensed on this type plant before, and it goes through the qualifications that are going to be required for ROs, SROs, etcetera, and experience requirements and so forth.

06-13A: In that description, it incorporates all the things from 10 CFR 120, the personnel that are required for plant operation, and not just operators. It lists numerous positions that training is required, not only the ROs, SROs, STAs, but also things like chem techs, rad techs, engineering training. All that isn't covered in 06-

13A.

In addition, it also covers things like general employee training and so forth, fire protection training. That is all encompassed in 06-13, and it is all based on -- or requires the systematic approach to training, and it also incorporates OE, TMI action plans. All that is incorporated into 06-13A.

So it is a complete template for a training program and, if an applicant follows that, then it will meet the requirements that we are looking for in that training program.

On to 13.5-1: Again, that is plant procedures, and as the applicant had said, that is going to consist of administrative and operating procedures. The operating procedures that are laid out in the standard review plan 0800, 13.5.1.1 and 2.1.

It talks about normal ops procedures, abnormal ops, EOPs, alarm procedures, etcetera, etcetera. What we are seeing is in the applications it is including all those procedures as well as the administrative procedures where the standard review plan for that, 13.5.2.1 has Category A, Category B, administrative procedures.

Those Category A procedures are things like controls such as control of procedures, temporary mods, those type things, and Category B is administrative like the shift supervisor night orders and turnover procedures, etcetera. So all those admin procedures, all those operating procedures are all listed in the COL that are the criteria from the standard review plan, NUREG-0800.

MEMBER BLEY: When you actually have the procedures -- you may have them -- have you thought about the extent to which you are going to examine the EOPs that are based on the -- the automated ones that come with the --

MR. KELLUM: You mean the generic? Are you talking about the ones from the vendor? Oh, okay, you are talking about the computer based procedures?

MEMBER BLEY: Yes, that were a part of this.

MR. KELLUM: That inspection program hasn't been written yet, but one thing we put in the SER for that is that review of procedures will be part of the procedures construction program. As far as for the time when the procedures are required, the standard review plan says that the procedures will be available in adequate time, not only to train the

operators but also to be in use in preparation for developing NRC administrator exams, etcetera.

MEMBER BLEY: So it has got to be like at least a year before?

MR. KELLUM: Yes, even more so.

MEMBER BLEY: But you will be writing that inspection procedure. Somebody will be writing it?

MR. KELLUM: Yes. Thanks.

MR. WILLIAMS: Hi. I am Mark Williams with Westinghouse. Just to help address your inquiry a little bit more with respect to the status of the emergency operating procedures and the abnormal operating procedures, we are preparing those. In fact, we have revisions of the EOPs now developed, and we are going to ensure that we have those developed to support the integrated systems validation testing, which will occur -- right now it is scheduled to occur in fall of 2011.

So we actually have revisions of those particular developed now, and we get the input from the customers from the other group and CO and applicants who review these procedures and provide comments on them, which we incorporate into subsequent revisions.

MEMBER BLEY: One thing I don't remember

from our visit up there. In the control room with the automated procedures, will the EOPs be incorporated in the computer version for the operators?

MR. WILLIAMS; Mark Williams from Westinghouse. Yes. The computer has a procedure system right now for the combined operating license applicants in the U.S. It includes all the EOPs and all the AOPs. So they are both included in the computerized procedure system.

MEMBER BLEY: Thanks.

CHAIRMAN RAY: You had one other section?

MS. McGOVERN: We do have one other section. 13.4 is incorporated by reference for the AP1000 DCD. The standard content is the table of operational programs required by NRC regulations, as outlined in Reg Guide 1.206 and SECY paper guidance 05-0197.

There is no site-specific content. The programs are site-specific, but the table is standard.

The table addresses what operational programs are required and their implementation milestones. Operational program implementation not addressed in regulation: That is when the milestone is not addressed in regulation, it is covered by license condition 3, and the timing of information

related to operational programs for inspection activities is license condition 6. Again, that is when it is not prescribed in the regulation when that milestone is.

This is an example from staff's SER of how we cross-reference the table given to us in the SAR. The one thing that is different, what we did is we covered where the programs are actually -- Where it says SER Section(s), that is where the programs themselves are reviewed, so that you can cross-reference where the program is, and then which NRC staff group reviewed the SER section that contained the program.

That's it.

MEMBER BLEY: Jim, I would like to ask you another question, going back to the Tier 1 documents that have all the DAC. That said a number of those are being deleted in the current revision.

When you folks reviewed that, do you just look at the new material and including no DAC with it or do you take those DAC and play those against the new material to see how they have been satisfied?

MS. KELLUM: I am not sure I follow your question.

MEMBER BLEY: In some of the human factors

area and in some of the operator areas, there were DAC, and some of those are being cleared as part of Rev 17, in general for everybody. What I am wondering is --

MR. KELLUM: All the training stuff is tiered, too.

MEMBER BLEY: Yes, okay. I thought you were talking about some of the others, too. Never mind. I will ask somebody else. Thanks. I will drop that.

CHAIRMAN RAY: Any other questions? Thank you. All right. So we have made up a half-hour already. That is a good sign, and we are ready to take up Chapter 15, beginning with the applicant.

Before you begin, Rob, if we have time before lunch, are you prepared to close the meeting and do the gas accumulation?

MR. SISK: Yes, sir. Our people are in the cafeteria right now. I just need 10 minutes to let them know when to come up.

CHAIRMAN RAY: That is fine. Said won't be with us until eleven o'clock at least. So I am just trying to look ahead.

MR. SISK: Do you want to plan for around eleven?

CHAIRMAN RAY: Well, I don't want to constrain the time for this segment; something like that, yes.

MR. GRANT: Thirty minutes will not constrain the time for this presentation, unless you guys have a lot of questions about not much information.

CHAIRMAN RAY: All right, fine. Proceed.

MS. AUGHTMAN: All right. So Amy Aughtman again from Southern, and with me here to cover 15 is Eddie Grant, and additionally we've got some Westinghouse support, if necessary. Hopefully, this should be pretty quick. Eddie.

MR. GRANT: All right. The usual list of standard -- or actually, the topics for Chapter 15, the usual information there. You will see that none of those are in blue, because as it indicates here, we basically incorporate by reference the DCD. We have taken no standard departures. Almost all of the information is IDR. There is no supplemental information that is standard.

There are no standard COL items for this particular topic, except that recently Westinghouse did identify a new COL item in response to one of their RAIs. That was identified as an open item in

our SER. However, as we have heard already yesterday from Westinghouse, they are reconsidering their original response, and it looks like there is likely to be an ITAAC in lieu of this COL item. So we are holding off on our response on it until we find out exactly what that response is going to say.

We anticipate an ITAAC and that the COLD item will go away, which will take care of our open item.

The open item 15.4-1 was a simple administration item to reinsert a reference to a Generic Letter related to boron dilution. We have removed it, because we thought all the information was covered by the DCD. Turns out the staff references that in 13.5 in relation to some of the procedures and asked us to put that back into the table in Chapter 1. So we have reinserted that reference, again no technical information there, just a cross-reference.

That pretty much covers it. Any questions?

CHAIRMAN RAY: Well, we you predicted, this is something where the meat of the subject is expected to be in the DCD and not the COL.

MR. GRANT: Absolutely. Safety analysis is not something the applicant does a lot of.

CHAIRMAN RAY: Any questions or comments on the part of the members?

MR. SISK: Mr. Chairman, just as a follow-up from yesterday's meeting in regard to the uncertainties on the instrumentation, we did follow up over the night. We could either discuss that now or later on, if you would like to hear a little bit about the data on the uncertainty in the calorimetrics and the transmitter.

CHAIRMAN RAY: Well, Said will need to be here for that, and so he is currently meeting with the Chairman. So I expect him back here around eleven o'clock.

Now -- Yes, go ahead, John. I am not trying to fill time, but just go ahead.

MEMBER STETKAR: I can fill time. Eddie, did I understand you to say that concerns about the -- Let me ask it a different way.

How does the site specific accident analysis account for dose to second-unit operators or effect on second-unit operators from an accident at one unit? Let's say Unit 3 versus Unit 4, which would be a site-specific unit configuration pathway analysis. that is not covered by the DCD, is it?

MR. GRANT: That is correct. It is not

covered by the DCD.

MEMBER STETKAR: Does that come under the auspices of the Chapter 15 analyses?

MR. GRANT: Not really. There is an aspect of it. The site-specific piece that we didn't talk about in Chapter 15 that we do provide some supplemental information for is to confirm that the chi over q dose dispersion factors are within or bounded by the generic dispersion factors, and we have all done that. We made sure -- We asked them to revise them, in fact, a time or two so that we made sure that we were all bounded, but we are bounded, and that is confirmed.

So when you look at the accident analysis for Unit 4, for instance, and the effect on the Unit 4 operators, there is actually a bounding analysis for the effect on the Unit 3 operators, because they are further away.

So we cover that in Chapter 6, actually, not Chapter 15, which is where we cover control room habitability and the events there. We did have a section on that in our FSARs that addressed the dual unit impacts due to both toxic chemicals and, of course, accident analysis to indicate that second unit is acceptable or has acceptable doses.

MEMBER STETKAR: Thanks.

MEMBER SHACK: Just a quick question from yesterday. There was discussion of chi over q. As I read through the literature, the chi over q values seem to be roaming around, and then there was some statement yesterday about changing chi over q back to what was the DCD 15 value.

Will the 17 have a value that will be bounding for all these sites?

MR. CUMMINS: This is Ed Cummins. This was related to this impaction thing that basically the staff didn't think that we had enough time to justify that. Then there was a period o f--

MEMBER SHACK: I was looking forward to Dr. Powers' comments on that impaction.

MR. CUMMINS: So we decided that time was more important. So we have them in 15. We tried to take advantage of impaction in Rev. 16 and 17. We put it back to Rev. 15.

Does any site have some issues with that? There are at least one site, the TVA site, where they have to do something, and I think it is probably not appropriate for me to say what they plan to do, because that is a site-specific thing. They can buy land or other things that would achieve an acceptable

solution.

MEMBER SHACK: So even with your new ventilation system for the control habitability, you are still going to need that chi over q value, the way you have it set up in 15?

MR. CUMMINS: Well, there are different chi over qs for the control room and the off-site dose, and one is more local, and one is more global. So they are unrelated.

For the control room, all of the sites are acceptable. For the site boundary, it depends on the distance to the boundary and, obviously, the weather conditions.

MS. COFFIN: Dr. Shack, in our Chapter 15 for Bellefonte, we discussed Bellefonte's exemption request and how they approached this issue for that particular site.

MEMBER SHACK: I was more concerned about it in terms of the habitability, since that is going to affect everybody.

MR. GRANT: As he said, we are bounded for the control room.

CHAIRMAN RAY: Anything else on Chapter 15 Standard Content? Hearing nothing, Amy, now do you want to respond on Chapter 9?

MS. AUGHTMAN: Yes, sir. If everyone is agreeable, Member Stetkar, we have a response prepared for your questions regarding Chapter 9 yesterday. Bear with us a minute as we pull that up.

I guess, just to quickly recap the question from yesterday, it is with respect to the FSAR table 9.5-201. So with me to help address that is Bob Hirmanpour and, if necessary Bob Prunty from Bechtel.

We went back and looked at some of the details on the questions that you raised yesterday, and we pulled a few slides together to try to help illustrate how everything fits together and is organized.

So we pulled the relevant excerpts from the guidance document, from the Branch Technical Position, and then we will show the DCD table and how that was set up, and then our FSAR table, and then where the resolution actually is for that.

MEMBER STETKAR: Okay, good.

MS. AUGHTMAN: So I am going to let Bob Hirmanpour step you through.

MR. HIRMANPOUR: Good morning. Bob Hirmanpour from NuStart Energy.

If I understood, actually, you had two

questions: Why is that response standard, if you are referring to plant specific items; and second, what is the analysis behind the justification?

MEMBER STETKAR: Yes, the justification for credibility. Right.

MR. HIRMANPOUR: Basically, the Branch Technical Position, CMEP 9.51, and that is the old BTP. That is the actual wording that is in the BTP. What is important on here is two things.

First of all, shared systems; second of all is man-made, man-made events. They are looking at the reasonable probability of occurring and affecting two units, as far as that is important to know that, because then the provider responded and used a word like unlikely. So go to the next slide.

So basically, what Westinghouse did, they tried to address the BTP and the DCD and a couple of the items, including 15 and 22. What they provided is that there are some site-specific elements that may impact that, because we are looking at external events. We are looking at fires with the industrial event or a jungle.

So what they provided is the remarks column that says this is going to be a site-specific basis. So, basically, you have to go to individual

FSAR to see how their site is set up. Go to the next slide.

Basically, what we did, we tried to provide that response. So we duplicated the DCD entry, and we provided a response here. We had provided references to the Section 2.2 and 3.5. Those are the sections of the FSAR that covers 2.2 mainly, the fires, including man-made fires. Could be an accident jungle.

It depends again on the site location. Some sites, they talk about the forest. Some site may talk about barges and airplanes. So it depends where you are located and your site boundaries and the potential accidents that could happen in that area. Those are covered in Section 2.2 and 3.5.

Overall, we had concluded that the response is probably going to be the same for all the plants, regardless of their situation. So we made that section of the FSAR a standard response.

Now if any site -- Again, when they prepared their COLA, they have to look at the standard content and, if they cannot meet those requirements, then they have to change that, and so far we haven't seen anything that says it is otherwise.

MEMBER BROWN: Can you go back to that?

Why do your quotes, the remarks, differ from the table itself and --

MR. HIRMANPOUR: From the DCD?

MEMBER BROWN; Yes, the different subsection, with 2.2.3 as opposed to -- I don't know if that means anything or not. It is just that you had different information here than you had in the FSAR. That is all.

MR. HIRMANPOUR: FSAR has the section 2.2 that covers a range of fires, and some of them may be potential man-made. Some of them not so. I'll provide a couple of examples to show you how actually we are cover the fire aspect of it and impact on the fire protection system, but those are plant-specific, but we will give you some of those examples.

MS. AUGHTMAN: I think his question is probably that in the SER --

MEMBER BROWN: The excerpt is different from what is in the SER.

MS. AUGHTMAN: -- it refers to 2.2.3.

MEMBER BROWN: Yes. I didn't know whether there was some difference. That's all.

MS. AUGHTMAN: And for the Vogtle application, we ended up having to truncate that last little subsection, because there's some ESP

references, and to make sure we included the broader section of relevant information.

MR. GRANT: In order to make sure that that stayed standard, we probably should have gone back to Bellefonte and truncated at 3 as well. I would admit to that as being an oversight on my part, but we will see if we can correct that so that it is indeed standard across the board.

MR. HIRMANPOUR: Did we answer the question of standard, as far as where we can find the information?

MEMBER STETKAR: I am following you where I can conceivably find the information.

MR. HIRMANPOUR: Okay. And again now, we have a couple of slides just specific examples.

MS. AUGHTMAN: Yes. So this is just one example of a section that would cover this type of event. In the FSAR 2.2.3.3.2, we have a fire due to an accident in an offsite industrial storage facility. So we are touching on site-specific information here, but I thought it would help to illustrate how the standard content was addressed in Chapter 9.

At Vogtle, in particular, we have a combustion turbine plant located adjacent to our site, and so we have performed an evaluation on Plant Wilson

and did determine that it would not have an impact on the control room habitability or cause thermal damage to safety related structures at Units 3 and 4.

Now that evaluation was actually done for Units 1 and 2, but we basically extrapolated that evaluation for 3 and 4, because those units are located further from the Plant Wilson than even 1 and 2 are.

So that is why we make the statement -- I just want to go back -- that we don't believe that those events are credible.

MEMBER STETKAR: Well, that is one example of one event that is very specific to the Vogtle site. I don't see a similar evaluation of other events that might be specific to the Vogtle site or a generic evaluation of generic events that might be applicable to any site.

In my life, I have come across a site that had a very large natural gas pipeline routed near it, and it is pretty difficult to justify that a large gas explosion could not affect multiple units at the site. Again a very site-specific configuration.

MS. AUGHTMAN: Right.

MEMBER STETKAR: And in fact, quite a bit of analysis had to be done to justify some frequency

of impact from those explosions. So just a blanket statement in a standard COL table that applies to all COL applicants that any event is incredible sounds --

MS. AUGHTMAN: That is what I want to clarify.

MEMBER STETKAR: -- sounds a little bit of a stretch.

MS. AUGHTMAN: That is why I would like to clarify. When we did define standard content, it was basically if the reference COL applicant plus one or more other COL applicants could say the same thing, then we designated it as standard.

So if a site could not say these words, that if they, in fact, had an event, like you are suggesting, that would say they would need to add additional information here, they would then come in and annotate that piece of the table as site-specific. But they have the ability to change --

MEMBER BLEY: I guess this might be more for the staff than for you. It just strikes me, too, that things that are standard content ought to be things that can be shown to be true in a general way.

That they are true at two or three sites doesn't in any way imply they are true everywhere, and once it is in the standard content, it gets easier for

the next reviewer not to look hard enough to see if it is really true at this site. So it is a little disturbing to see it as standard content, I guess. So I agree with Mr. Stetkar.

MR. HIRMANPOUR: Let me add one more thing. Remember, I said conclusion standard. Again, we do refer to site-specific. You have to go to site specifics, and those sections also talk about external hazards, and each site has already done an external hazard analysis that supports those statements.

So each site went back, and we had cases we have pipelines, gas pipelines, close to the sites. So we did extensive review of those external hazard analyses, and also that was factored into the PRA.

MEMBER STETKAR: Are those -- Okay, but this isn't PRA. This is -- Are those analyses to justify the frequency and consequences which are, obviously, PRA terms documented in the respective sections of those COL FSARs. So I could go to that section.

For example, you showed a qualitative analysis for Plant Wilson -- potential fires at Plant Wilson's effect on Units 3 and 4, a qualitative analysis, but some justification. For other sites where perhaps a more detailed quantitative analysis

was required to justify this incredibility, are those analyses documented in the appropriate sections of either -- let's just say Section 2 or Section 3 of the FSAR?

MR. HIRMANPOUR: I will have to ask Vogtle for specifics.

MEMBER STETKAR: Because, see, the criteria say a reasonable probability, which is obviously a somewhat nebulous term. So stating that something is not credible is also a somewhat nebulous term. So we are talking about comparative frequencies here. It could be very site-specific and could indeed require some analysis and review.

MR. HIRMANPOUR: Also, the reasonable probability has to do with the event itself occurring and the effect.

MEMBER STETKAR: That is right. I said frequency and consequences.

MR. HIRMANPOUR: By default, the AP1000 doesn't have shared systems. So this is less applicable in the AP1000 world than some of the older plants that may have a common instrument air system or something.

MEMBER STETKAR: Sure. Sure, that is true. That is true. You are not susceptible to as

many of those types of events.

MR. HIRMANPOUR: Right.

MR. PRUNTY: This is Bob Prunty with Bechtel, representing Southern Nuclear. Let me start by saying that the reason that we referenced 2.2 is because 2.2 is where the discussion of all of these sorts of events comes.

In the instance that you brought about pipelines, pipelines are mentioned in 2.2. The nearest pipeline at Vogtle happens to be greater than 10 miles away. It is not evaluated as any potential impact to the plant based on the regulatory guidance right now. So that was not further evaluated in the consequences section.

For 2.2.3, we have a close proximity of an oil burning plant, and just to make it clear, the Unit 1 and 2 evaluation of that that we referenced is a very formalized calc. It looks at smoke particulate and heat flux and all sorts of things. We were able to utilize that calculation and make it applicable. That is the qualitative piece.

We didn't just qualitatively say, well, since it is this far away, it must be a problem. We looked at how that calc was treated with the existing units and the conclusions they drew, and then we said

we are further away; therefore, that calc is applicable to us, but it was not just a qualitative basis.

That was true for analyzing all the off-site related events, railcars, truck accidents, any of that sort of thing, and where there were criteria met like being with inside five miles and transportation accidents, there were quantitative calculations done, but they are all addressed individually in individual subsections within 2.2. So there is not --

MEMBER STETKAR: Sure. No, I understand.

MR. PRUNTY: -- a blanket statement. It depends on the existing plant and what threats there may be to that particular plant. But we used quantitative calculation methods for all the things that were inside the selection criteria of either five miles or 10 miles or whatever it happened to be.

MEMBER STETKAR: That is really good. I am glad to hear that.

MR. PRUNTY: This was just picked out as just one example of that kind of statement. Granted, it did not use the word credible, but it said it would have no impact, and we used that phrase, no impact, in other venues as we were talking about the different events.

MEMBER STETKAR: I am not necessarily looking for a six-significant figure frequency analysis, but I am looking for some technical justification. It sounds like that is well in hand for Plant Vogtle.

I am still a bit concerned about all of that analysis being folded over into justification of a standard COL item to simply say it is not credible.

MR. GRANT: It does not. Let me address that. Eddie Grant again with NuStart.

It sounds like there might be a little bit of confusion about what standard means. It is not like the DCD. The DCD is generic information that is absolutely applicable across the board unless you have taken a departure. So it applies to all the AP1000s.

A piece of information identified as standard in a particular COL does not mean that applies to all seven of the AP1000 COLs. That means it is standard information being reviewed as standard on the reference COLA and, if it is so designated in an S-COLA as standard, it will get the same review or it won't need to b reviewed again. But it is up to each S-COLA to verify the information is indeed standard for their S-COLA, and it is up to the staff, as we heard suggested, to confirm that the standard

information was standard in the R-COLA and that, if it is not standard, if it is designated as site-specific, as Amy indicated it could be, instead of a departure -- You don't have to take a departure from standard information in an S-COL. You only have to identify it as site-specific.

That keys to the staff to do a site-specific review on that piece of information. So it is different than the DCD being generically applicable. It means it is standard and gets a standard review such that, if it is standard in an S-COLA, it doesn't need to be reviewed again.

CHAIRMAN RAY: Well, Eddie, that is very helpful. You must agree, though, that it is sophisticated.

MR. GRANT: It is. It is, and I apologize that we haven't made that clear in the past.

MEMBER STETKAR: I would ask the staff, is that -- It seems it makes the staff's life rather difficult, because the staff then has to examine in every S-COLA every item that is marked standard and essentially ask themselves is there anything that I know about this site that would make this non-standard for this site that has not been designated as site-specific.

There's all of those double negatives thinking about omission.

MR. GRANT: Actually, it is the other way around. They need to confirm that they do a review on all the information that is site-specific, and confirm that each piece of standard information was indeed standard in the reference COLA.

CHAIRMAN RAY: You are both saying the same thing. Let the staff respond to John.

MS. COFFIN: I guess I would like to make two points. One is that the subsection 2.2 and 3.5 that refer to this table, each COL has their own site-specific analysis, and the staff will review and evaluate those conclusions in Chapter 2 of our safety evaluation report.

So there is no generic analyses. At least, I am not aware of any generic analyses that covers them. So each site will be evaluated in terms of its manmade hazards. That is part of our standard review plan. That is standard.

I think simply this conclusion for this set of groups happens to have come to the same happy conclusion, but the analysis that supports it are all site-specific, and they are evaluated by the staff on a site-specific basis.

MEMBER STETKAR: That helps, and as long as the reviews are being done on a site-specific basis for essentially the scope of analyses that would feed into this conclusion, then this simple conclusion out of context is probably covered.

MS. COFFIN: Right. The second point that I wanted to talk about is, as the staff is looking at a site-specific COL, one of our primary review activities is to not just accept standard content at face value, but to rigorously ask ourselves a question: Are there any site-specific things that we should question the applicability of this being standard?

MEMBER STETKAR: But that is -- You have to admit, that is different and difficult to do, especially -- You spend a lot of effort.

MS. COFFIN: It is not trivial, but I would like to give credit to the applicants. I think they do a very good job in terms of defining what is standard and what is site-specific, and there were times where we didn't agree, and we came to some resolution.

MEMBER STETKAR: I think what Dennis and I are saying is that, if these two particular entries labeled 15 and 22 in this particular table had a site-

specific annotation in the lefthand column rather than just a blanket standard annotation for the whole table, it would seem to make everyone's life a lot easier.

If indeed every site could justify that it was not credible based on their own plant's site-specific analyses, well, so be it. If they couldn't, well, it is a flag that is raised to reviewers that you really need to think about those things.

All that being said, if indeed the staff feels comfortable with doing a review of what I call the input analyses in Chapter 2 and Chapter 3, and you feel those are fairly complete, then the simple conclusion summary table was sort of a moot point.

MEMBER SHACK: Every topical report is sort of like this. You come to a generic conclusion, but you have to verify it in every case. To me, this isn't really any different from that. They can make that statement, but it really still has to be verified.

CHAIRMAN RAY: Well, that is an interesting parallel, Bill. You may be right. Somehow a topical report and this seem a little different to me, but maybe you are right.

It does make you wonder, well, what is

being accomplished by standard content review, and I just have to think about that a little bit.

MEMBER STETKAR: Yes. You know, this is -- Said is here. So we can stop. Let me just finish the thought.

I know myself, when we were given the FSAR, the Bellefonte FSAR and the SER, I basically ignored anything that had BLN in the lefthand column, and concentrated on anything that had STD or SUP in the lefthand column.

I will tell you that, if I was given the site-specific FSAR, I would probably not pay much attention to things that are called STD and SUP, simply because we have theoretically gone through all of that. That is just natural human nature.

So that comes back to this issue of how thoroughly and what type of thought process do I use as a reviewer to think about things that we have previously reviewed and have accepted as standard, and now might be different, subtly different for some specific site, but might not have been captured perhaps by the applicant.

CHAIRMAN RAY: Well, John, would you like to identify this for some further discussion?

MEMBER STETKAR: I don't think so, Harold.

I think that the staff's response regarding their review of the site-specific -- let me call it hazards analysis in Chapter 2 and Chapter 3 will probably cover it, regardless of how this particular table is annotated. I think I am pretty well satisfied that the basic technical issues will be covered during the reviews, and any significant site-specific differences will be identified through the reviews of those other sections.

CHAIRMAN RAY: Dennis, you and Sam also shared this concern.

MEMBER BLEY: I am pretty close to John, but just two things. I have to admit, the word incredible grates on me whenever I run across it, and I see a subtle difference from what Bill said.

In truth, yes, you have to check everything. I agree, but in most of those topical reports we kind of think something has been built that bounds a general situation, but we have to look and make sure we are not surprised.

Here we had a bunch of statements which we just outright know don't apply everywhere. I think that is the difference, and having them there is -- I agree, as long as the review is looking in detail, we are covered. But it just seems odd to me to call

things standard content when we know they are not going to apply a lot of other places.

CHAIRMAN RAY: Yes, and I think the way you put it, which was just because it is true of the first three plants in a series, to make that standard content on that basis does seem to create kind of a bias that doesn't need to be there. I am not sure what purpose it serves.

MEMBER ARMIJO: I think it is just needlessly confusing. I don't see why you have to go through all this.

CHAIRMAN RAY: Again, I will ask, we don't -- to make something to bring us back to this later, if you want. But otherwise, we will move on.

MR. GRANT: I would suggest that you will get several opportunities to discuss that very topic with each S-COLA that comes through, because you will get exactly the situation that you described. You will be asked to review the site-specific content at that point and overlook the standard, because it has already been covered.

CHAIRMAN RAY: Well, precisely, we will be asked again.

MEMBER BLEY: I guess we won't. That is the other hazard of putting too much stuff in the

standard.

CHAIRMAN RAY: Anybody else have anything more on this? Okay, you want to share your other slides, Amy?

MS. AUGHTMAN: I think these covered it.

CHAIRMAN RAY: Okay, fine. Rob, are you ready?

MR. SISK: We are.

ACTING CHAIRMAN HARRIS: We had two items you have proposed to discuss.

MS. COFFIN: We have a Chapter 15 from the staff presentation to make.

CHAIRMAN RAY: All right. There's too many discussions. Excuse me. Stephanie.

MS. COFFIN: The staff has a presentation to make on Chapter 15.

CHAIRMAN RAY: Yes, I understood that. Excuse me, Rob. Staff would like to proceed, even though we had projected this as the time to answer those questions. That is okay. Go ahead, Stephanie. I ask you to just stand down for another few minutes.

MR. SISK: That is fine.

MR. HABIB: Thank you. This is the staff presentation for the staff review of Chapter 15 of the

COLA. It covers the standard material. The technical reviewers: Beside me, Gene Hsii and Michelle Hart, and also Jay Lee was a member of the review team.

My name is Don Habib. I am the project manager. Previous project manager was Joe Sebrosky, who is also here today.

This is an outline of the Chapter 15 in the FSAR and the SER that we prepared. The numbering of the sections in the SER generally follows what was in the FSAR from 15.0 through 15.8 and the two appendices.

In addition, the staff added a 15.9. 15.9 doesn't have a corresponding section in the FSAR, and that 15.9 basically includes the radiological analysis of the design basis accidents. They were put in 15.9 basically to keep them all in one place.

So with that, I will turn it over to the staff. Well, the three things that we will cover: In 15.0, the calorimetric uncertainty methodology; 15.4, inadvertent boron dilution; and 15.9, dual unit analysis. Those are the three items marked in yellow.

CHAIRMAN RAY: Okay.

MR. HSII: My name is Gene Hsii. The Chapter 15.0 Accident Analysis, the FSAR incorporated by reference the supplement to Section 15 of Revision

17 DCD.

As we talked about it yesterday, during the AP1000 DCD review, we had a question about the calorimetric uncertainty of one percent, and Westinghouse proposed to make it a COL item. That will he COL item 15.0-1 for the gratification of the calorimetric uncertainty of one percent.

In the FSAR this issue not addressed. So we identified that as an open item, 15.0-1. We also identified a COL open item 15.0-2 on the same issue, except we talk about the particular information should be provided to address this issue.

We got a letter from Southern Nuclear. It is dated January 22 of this year. It indicated that Westinghouse is planning to revise the response to the RAI, and so we have not received the RAI response yet -- the revised RAI response yet. So this item still remains open.

CHAIRMAN RAY: Understood.

MR. HSII: Next one. This one, the Generic Letter 85-05, is related to the problem that was an event issue. This issue was reviewed and approved during the design certification review except we identified an issue at that time, issue tied to a emergency operating procedure.

In Table 1.9-204, Generic Communication Assessment, this is all the items related to written and Generic Letters in the Revision 0 of Table 1.9-204. This Generic Letter 85-05 was listed there, but in Revision 1 that item was removed. So we had an open item, said put it back; tie it to -- cross-reference to COL item 13.5-1.

We got a letter from Southern Nuclear on January 22nd. They indicate they will put it back to the table for other issues.

CHAIRMAN RAY: Okay.

MS. HART: This is Michelle Hart. I am with the Siting and Accident Consequences Branch. As you had discussed earlier with the COL applicants, in Chapter 15 it is incorporated by reference, and the chi over qs are shown to be less than the chi over qs in the DCD. So there is not a lot of content to that. However, for Bellefonte, because they were a special case, we have this separate section, 15.9, in our SER.

Included in that, we included the standard supplemental item in Chapter 6.4, which is the dual unit analysis which was asked about earlier.

The standard content is basically that qualitative argument, to a certain degree, that if you can handle the accident at your own unit in your

control room, you can handle an accident at a nearby AP1000 unit. Because this was Bellefonte, there was no other units on the site.

So it just talks about AP1000 units, and we agree with that assessment.

CHAIRMAN RAY: So this is standard content applicable to dual unit sites.

MS. HART: That is correct. That is correct. If there is another unit on the site, the applicant would be expected to discuss the current units, like for Vogtle Unit 1 and 2. They would have to discuss Vogtle 1 and 2.

CHAIRMAN RAY: That is site-specific then.

MS. HART: Right. But the standard content if you have two AP1000 units.

CONSULTANT WALLIS: Can we over this issue again of not credible events? There is no possible common cause that could lead to simultaneous accident? There is no possible, imaginable common cause?

MS. HART: Well, that is not the same thing as credible.

CONSULTANT WALLIS: It is

MEMBER ARMIJO: Common control room.

CONSULTANT WALLIS: Well, maybe we can talk forever about what you mean by credible. You

mean it has a very low probability. Credible, to me, means you can imagine it happening.

MS. HART: Right.

CONSULTANT WALLIS: To you, it means it has a very low probability, that is incredible?

MS. HART: That is correct.

CONSULTANT WALLIS: Then so it becomes a very personal thing about how improbable it needs to be to be incredible.

MS. HART: That is correct.

CONSULTANT WALLIS: Which is a little unfortunate. Okay, no more.

CHAIRMAN RAY: Okay. This is the standard content edition to cover dual unit sites then. Anything else you wanted to say?

MS. HART: I have nothing further.

CHAIRMAN RAY: Okay. Stephanie, is that it?

MS. COFFIN: Yes, sir. Thank you.

CHAIRMAN RAY: All right. Now I was premature before, but I think it is time now that we can address two items. We will address them as the Chapter -- Wait a minute. It is the instrument table.

MR. SISK: The instrumentation, yes, sir.

CHAIRMAN RAY: And then we will have a

closed meeting to discuss -- I think we will have time before lunch -- gas intrusion.

MR. SISK: We will do the instrument table first and the gas intrusion before lunch, you say?

CHAIRMAN RAY: Yes. We will close the meeting, do the gas intrusion, and then go to lunch. When we return, then it will be -- resume open meeting.

MR. SISK: To answer the question on the instrumentation table, I want to introduce Mark Williams. He was discussing a little bit earlier this morning on a couple of topics, but he is going to basically respond to the questions regarding the uncertainties and how some of that is being managed in the calorimetrics.

MR. WILLIAMS: Good morning. My name is Mark Williams. I am with Westinghouse, and I am just going to sort of relay my understanding of what the issues are.

These issues are relating to the calorimetric instrument uncertainty versus the NIS trip uncertainty. There was a table which had three values, three parameters, in it. All those parameters were related to calorimetric uncertainty.

With respect to calorimetric uncertainty,

we include in the calorimetric uncertainty instrument drift and rack uncertainty to accommodate an entire cycle. So that is rolled up, and that is included in the calorimetric uncertainty for the power, the secondary power calorimetric.

The NIS trip -- that uncertainty is separate and independent from that. They are not related. So the NIS trip uncertainty also includes instrument drift and rack uncertainty, but it includes the instrument drift and rack uncertainty that is independent of what is included in the calorimetric calculation.

We have a process by which, on a daily basis, we take the secondary calorimetric, and we adjust the NIS power indication with gain, so they are within acceptance criteria. So there is effect.

There is no dependent effect between the calorimetric uncertainty and the NIS power trip -- power range trip uncertainty. That is accounted for in the process of ensuring on a daily basis that we equilibrate this secondary calorimetric with the NIS reading by adjusting with gain.

MEMBER ABDEL-KHALIK: Excuse me. The table, as written, has the two percent calorimetric uncertainty, and in it, it listed that. What you are

telling me is that two percent actually incorporates within it not just the uncertainties in the instrumentation used to measure feedwater flow, etcetera, to be able to do the secondary energy balance, but it also incorporates the instrument drift in it associated with the NI instrumentation. Is that correct?

MR. WILLIAMS: It incorporates the instrumentation and the drift associated with the secondary calorimetric --

MEMBER ABDEL-KHALIK: With the secondary calorimetric.

MR. WILLIAMS: -- and also the NIS power range trip uncertainty incorporates the instrument drift and rack uncertainties associated with it.

MEMBER ABDEL-KHALIK: So if that is the case, why are these listed in this table as independent variables?

MR. WILLIAMS: I am not sure.

MEMBER ABDEL-KHALIK: If the instrument drift on the NI instrumentation is incorporated within the two percent, why is it listed separately as .4 percent?

MR. WILLIAMS: That .4 percent actually relates to the uncertainty associated with the power

range trip, and there is a portion of the uncertainty that is not accommodated in the calorimetric uncertainty that needs to be accommodated in the power range trip uncertainty.

MEMBER ABDEL-KHALIK: I guess I would have to look at the detail and see what part needs to be separated out.

MR. WILLIAMS; Yes. They are independent, basically. Essentially, on a daily basis we evaluate the calorimetric power. We compare that to the nuclear power, the NIS power as measured by the power channels, and then we adjust with the gain to make sure they match. So that eliminates dependency between those two uncertainties, effectively.

It is not unusual in power plant practices to take a secondary calorimetric and to make no adjustment on NIS, because the drift -- there has been no impact due to instrument drift or change in the 24-hour period within which was the last time that you did the secondary calorimetric calc.

So the point I am trying to make is that they are not dependent on each other. So to include the .4 with the calorimetric uncertainty is not -- Basically, it would be rolling up two different numbers that are calculated for two different bases.

MEMBER ABDEL-KHALIK: So let's just sort of clarify things. Whether we are talking about two percent or one percent, what does the two percent include?

MR. WILLIAMS: The two percent would include all of the uncertainty associated with the feedwater mass flow rate measurement, any type of rack or instrument drift associated with the measurement and the instrumentation for that, blowdown measurement error, all of the variables, the rolled up variables that would go into calculating secondary calorimetric power, and the drift associated with those.

Once a day we measure secondary calorimetric power and make sure it matches within acceptance criteria to the NIS power. The NIS power range trip has an uncertainty associated with it that is specific to the NIS measurement process. So its uncertainty is rolled up in there, and that uncertainty is accounted for in the uncertainty associated with the trip, the trip setpoint, the high powered trip setpoint.

MEMBER ABDEL-KHALIK: Right.

MR. WILLIAMS: So they are kind of separate things.

MEMBER ABDEL-KHALIK: Separate things. So

the question then remains: When one is doing LOCA analysis, if they are really separate, why aren't we concerned about the energy instrument drift over and above the uncertainty in the energy balance measurement?

MS. MONAHAN: Hi. This is Jill Monahan. The NI -- the instrumentation in the table that you are looking at is for the high neutron flux setpoint, which is not credited in the LOCA analyses. We do not trip on that. We only use the initial power uncertainty and initial -- the one percent or two percent. The high neutron flux setpoint, which is the total of 118 percent, is only credited in the non-LOCA analyses.

MEMBER ABDEL-KHALIK: That doesn't make sense, does it? All we are concerned about is what is the real -- what do we think the real reactor power is when the event takes place; and if that difference between the real reactor power and what the measured reactor power is, that is caused by error in the energy balance, which is the one percent or the two percent, plus any drift in the instrumentation during that 24-hour period when you sort of match the two?

MS. MONAHAN: And that is all included in the secondary power calorimetric, which is the one or

two percent initial power.

MR. WILLIAMS: Correct.

MR. MONAHAN: The table specifically is looking at the reactor trip setpoint for high neutron flux.

MR. WILLIAMS; Just for the high neutron flux.

MR. CUMMINS: This is Ed Cummins. And that trip setpoint is not changed daily. That trip is every 18 hours.

MEMBER ABDEL-KHALIK: I understand, 118 percent is 118 percent. Right.

MR. CUMMINS: So you get -- It is, I think, at least logical that you might have a drift of .4 percent for 18 months of drift, and a drift of a small fraction of one percent, because the drift is a small part of the calorimetric error in a daily situation.

MR. ABDEL-KHALIK: I will have to think through this again, but I think we can stop at this time. Thank you.

CHAIRMAN RAY: Any other members have any comments or questions? Yes, Rob?

MR. SISK: I was just going to say, we've gone as far as we can on this, and we do apologize. I

understand the table can be a bit confusing. We would be glad to follow up on any additional questions.

We can go to the gas accumulation when you are ready.

CHAIRMAN RAY: All right. Well, then we will want to close the meeting for that purpose. So we will do that in anticipation that we can get it done, the gas accumulation discussion, prior to Noon. Is that all right with you, Stephanie? All right.

(Whereupon, the Open Meeting went off the record at 11:20 a.m., and the Subcommittee moved to Closed Session.)

- - -

A F T E R N O O N S E S S I O N

Time: 12:57 p.m.

CHAIRMAN RAY: Back on the record. It looks to me like there is a P&P meeting that is running long or something, is my guess as to what has happened. In any event, we can't -- Although we are ahead on the agenda, I think we are going to use up time talking about action items later today.

We are open for the rest of the day, I believe. Rob, you want your guys to be able to talk, don't you?

MR. SISK: Yes, sir.

CHAIRMAN RAY: Anyway. So I just wanted to say that, by the agenda, we are running ahead, but I think we are going to need the time to talk about the comprehensive review of the action items here at this milestone that we have reached. So I would like to proceed then, please, whoever is in charge of this presentation. yes?

MR. SISK: I was just going to say, if I could, could I just do a quick call to check on the phone.

CHAIRMAN RAY: So you can see if your guys can hear us and we can hear them. Go ahead.

MR. SISK: Terry Schultz, are you on the

line? Matt Evans, Terry Schultz? Is the line open yet?

CHAIRMAN RAY: Well, you know as much as I do. Rob, you know how to check on that. Peter will go check on it.

I think we should begin. Go ahead.

MR. CARUSO: Good afternoon.

CHAIRMAN RAY: Good afternoon.

MR. CARUSO: My name is mark Caruso. I am in NRO in the PRA Group, and with me is Malcolm Patterson. He is also in the PRRA Group. We are here to talk to you about regulatory treatment of non-safety systems.

We are going to start out giving you a sort of general background on it, some of the history, a discussion of the process that is used, and a little bit about how that process was applied in the original design certification for the AP1000. Then after I finish that, Malcolm is going to go and talk about RTNSS as applied to the most recent amendment for the AP1000.

As far as history goes, in a nutshell, RTNSS is really -- It is related to passive designs only, and back in the Nineties when AP600 was in here, there were a number of concerns about the uncertainty

in the performance of the passive systems, uncertainty regarding new systems and lack of operating experience, initiating event frequencies, failure rates of squib valves, and these sorts of things.

In the passive designs, the active systems are really non-safety systems, but there are systems there that look a lot like the original safety systems in many respects, and there was concern that these systems were important, more important than non-safety systems in original designs and, because of the uncertainty and concern about the passive systems, that there should be some treatment of these systems.

So I am going to go to the next slide. So what I thought was I realized the committee knows a lot about passive systems and passive designs, and there is no intent here to make this into some sort of review tutorial on passive systems. But since this is intimately related to passive systems --

CHAIRMAN RAY: Excuse me just a second, Mark, and let me see if we can establish this communication link. Doesn't sound like it.

Rob, do you want to do your check again, or Ed?

MR. CUMMINS: Terry or Matt, are you there?

MR. SCHULTZ: Terry is here.

MR. CUMMINS: Who else is there? We can proceed.

CHAIRMAN RAY: Sorry. Go ahead and restart on this slide, please.

MR. CARUSO: Okay. It will be useful to talk about a couple of aspects of the passive system plant designs that really sort of make up the driving force for RTNSS.

As you know, passive systems provide the primary safety functions in the passive designs, reactor water make-up, core cooling, containment cooling. They don't use mode of power. They don't use pumps. They use natural forces and some dc power to perform their functions.

These are the safety related systems. These are the systems that replace the ones we all know and love, the pumped injection, long term recirculation, pumped recirculation, the fan coolers, those systems.

As I mentioned, because there is uncertainty, they are new, they haven't been tried, there is in some respects no operating experience, the active systems in these designs perform back-up functions to the passive and, therefore, the staff

raised a policy issue back in the Nineties that there should be some sort of treatment, that they should not be treated like non-safety systems in our original designs, that we should do something.

So there were a number of policy discussions, policy papers written, and the Commission finally issued an SRM that established a policy, the NRC's policy on RTNSS. Go to the next slide.

So active systems: The active systems in the passive design -- they are not credited in the accident analysis. They are only included if they make it worse. They are, for the most part, designated as non-safety systems.

They, in many respects, play a more important role than active systems in current designs, although there are a number of non-safety systems in current designs that are important to risk, as we know. But they do provide -- They provide defense-in-depth for some of the safety functions. There are systems that can inject water into the core. There is AC power that can provide back-up for other functions.

These systems, in many cases, will respond first in an accident, and they can avoid challenges to the passive systems. And because they can do these functions and perform these functions, they may, in

fact, be very risk-significant.

So because of this, the Commission and the industry agree that there should be some regulatory oversight of some of these non-safety systems, and the NRC staff and the industry, through the Electric Power Research group, established a process for deciding what non-safety systems should be scoped into this program -- basically, what non-safety systems should have treatment, and what should the treatment be. And that is pretty much it. What is in scope, and how do they get treated?

So the first step, as I said, is to identify what those non-safety systems are that deserve treatment, and then to essentially look at their importance. They invented the term reliability/availability mission for each SSC, which really is defined as performance requirements, the requirements on availability, requirements on the reliability for the SSC. They used that information as the basis for deciding how important is this SSC, and that importance then dictated what the treatment would be.

Now the various types of treatment that are sort of being used and available are tech spec controls, availability controls, which is a new idea,

a new concept in new reactors whereby a tech spec-like document has been prepared, looks very much like tech specs, has limiting conditions for availability.

It has action statements. It has surveillance requirements. It is just not -- doesn't have the toughness and the teeth that tech specs have, doesn't require plant shutdowns. It basically says this equipment should be available, one train, two trains, whatever. It has LCOs on availability, and has actions for what happens, what you should do if you don't have -- if it becomes unavailable, and it has surveillance requirements to help you evaluate whether or not it is available.

In addition, there are design considerations, and this mostly comes into play for non-safety systems that may be aggravating initiating events, whereas what is turning out to be the approach for both the ESBWR and AP1000 is, for those cases, to go in and make them better, to increase their mean time to failure, that sort of thing.

MEMBER STETKAR: Let me ask you about the design issue, because I don't think any of your later slides speaks to that, do they?

MR. CARUSO: Well, I am going to say a little bit about that. The design considerations in

RTNSS -- there's basically, I think, a desire to have some of the most important non-safety systems, systems that can directly serve as defense-in-depth for the passive, to be redundant, to have a certain redundancy.

MEMBER STETKAR: Let me kind of cut to the chase. In terms of redundancy, in terms of numbers of pumps and pipes and valves, I understand that. The thing that I was thinking about were design considerations such as seismic design, for example.

In the designs I have looked at, the RTNSS systems -- Unless there is a seismic two over one type of concern, the RTNSS are basically non-seismic design. Therefore, they are not qualified for a seismic event, across the board, unless they can interfere with a safety system.

The same is true, in general, for environmental qualification. For example, cabinets or control panels in the main control room, if they are designated safety related, need to be environmentally qualified, but other panels and cabinets that support operator responses, if they are not safety related, may be RTNSS, but are not environmentally qualified.

So those are the types of design considerations, not necessarily the hardware layout.

MR. CARUSO: On the next slide I am going to talk about the criteria that are used to scope things into RTNSS, and there is really only one criteria there that has some design requirements associated with it, and that is pretty much the way the Commission laid it out.

You are right. When you get to design, it is minimal. There is a few very specific requirements that have to do with design, and they really only apply to this particular category. So I will get to that in a second.

The last treatment option is the reliability assurance program, which I am sure you are all familiar with. It is discussed in Section 17.4 of the FSAR. I am sure you have all been briefed on -- I know you have been briefed on the ESBWR reliability assurance program.

It is basically a program whereby -- It is sort of an expanded maintenance-like program, in a sense. You look at all your components, safety related and non-safety related, and you apply a risk informed ranking type of process to decide what gets scoped in this program, similar what is done in the maintenance rule, high significant, low safety significant, that sort of thing.

Then it allows you to apply all your operational programs, parts of them, to these SSCs, not just maintenance: design controls, procurement, QA. The program has requirements on helping you figure out what levels of these things should I apply, and what kind of testing.

I think maybe you heard some about the IST. IST is applied yesterday. So that is really what the reliability assurance program is. It is a program to identify what is really important in the plant, both non-safety and safety, from a risk perspective, and then decide in all the areas what kinds of treatment should those SSCs get.

MEMBER STETKAR: Mark, since you mentioned IST, it still -- I went over my notes last night. It still wasn't clear to me. I think in our discussions yesterday, it seemed that the IST requirements are still being interpreted as strictly applicable to safety related valves, since the question came up in terms of motor operated valves and power operated valves.

I was really curious what sort of process is in vogue to elevate RTNSS motor operated valves and power operated valves to that list of equipment that are subject to formal IST requirements.

MR. CARUSO: Well, as far as RTNSS goes, scoping RTNSS components -- and it could include valves -- if you scope them into -- If you basically say all my RTNSS SSCs are going to go in the reliability assurance program, which is, in fact, what is happening, then you are going to get more of a risk informed treatment. You are going to get them ranked. You are going to get the treatment applied to it.

Now it is true that the normal IST program that is required in 50.55(a), whatever, is still based on safety related considerations. There is a risk informed IST program that is voluntary, and for the new reactors I think there may be only one COL who is proposing to get risk informed applications along with their combined license. Other ones are basically going to get their license first and then come back and look at what they want, QA, IST, whatever.

So there is a risk informed process.

MEMBER STETKAR: But in general, the way that is applied in practice is to extend the test intervals for my set of predefined equipment. It is not to add equipment to that list. I haven't ever seen --

MR. CARUSO: No. The scoping could scope non-safety in there. The scoping rules are not -- It

is not limited to safety related equipment.

MEMBER STETKAR: That's right in principle. In practice, I am saying is the way people tend to apply risk informed testing programs is to extend the test intervals for equipment that are on a pre-defined list.

MEMBER SHACK: It is more their incentive.

MEMBER STETKAR: That's right. That is their incentive. We are talking about application after the license is issued.

MEMBER SHACK: In practice, you might include.

MR. CARUSO: And I have probably told you as much as I know about risk informed IST. So I can't --

MEMBER STETKAR: I guess what I am asking about is, as part of this process of defining RTNSS equipment that's supposed to be subject to increased scrutiny, there is no formal process that says thou shalt add, you know, X equipment down to some level of risk significance from your D-RAP list, for example.

I am asking that. I am not aware of it.

MR. CARUSO: Well, I think that the reliability assurance program will have you -- You know, if valves come in there, it will have you look

at applying ISG in some shape or form to those valves. Now it may not be the same level of treatment that you would get from safety-related, but I think the program forces you to go through the process of addressing that.

The program doesn't specifically say how. It just says, you know, what we have approved as -- You have a program that has you do these things. You evaluate what kinds of design controls, what I need for this stuff, what kinds of QA, and it has criteria in there on doing that.

We haven't actually seen it done yet, because it doesn't actually get done until farther down in the licensing process with the COL. We haven't seen it in the design certification readings.

MEMBER BONACA: But if you get this ranking, for example, up to the article section stage or after that, could it be in the same component that folds under accepting QA requirement at Plant A is not required to have the same treatment in Plant B?

MR. CARUSO: Could be.

MEMBER BONACA: Could be.

MR. CARUSO: Because we are not -- You know, we are not -- They are not proposing all of the details of the program. It is more at a higher level.

MEMBER BONACA: I am kind of struggling with that, because right now -- until now it has been very clear, you have a safety related component -- category requirements.

MR. CARUSO: Well, safety related, no. They are going to get the same treatment for safety related. The stuff that gets in here gets non-safety related.

MEMBER BONACA: Okay.

CHAIRMAN RAY: Excuse me, Mark. Those who are on the line, please mute your end of the communication.

MR. CUMMINS: Terry, you need to mute your line.

MR. SCHULTZ: Sorry.

CHAIRMAN RAY: This is what is called multi-tasking. All right, Mark, you may resume.

MR. CARUSO: We are sort of getting into another very interesting topic here that we could probably spend the whole meeting on, but how about if we get back to it.

CHAIRMAN RAY: Not until Mario's question is answered.

MR. CARUSO: Okay.

MEMBER BONACA: No, he did. I understand

now in part. I am still left with some questions regarding a component that, again, may have a different classification in two different plants, just because you have a management group that makes the call one way or the other, and we have inconsistent treatment among the design, the same design.

MR. PATTERSON: I can only speak to the AP1000 that I have reviewed, but we expect that the treatment will be identical at all AP1000 licensees. They have all adopted the D-RAP list. The components that are identified as being within the scope of the RTNSS program are already identified by Westinghouse, and all of the applicants have said that is our list and we will measure them that way, and they have 18 different issues, just like the figure related to a program. Simply a different level of quality being expected.

MEMBER BONACA: That is the way it should be.

MR. SCHULTZ: This is Terry Schultz from Westinghouse. I think I have something I could add to this question about in-service testing.

CHAIRMAN RAY: Go ahead.

MR. SCHULTZ: I think that the way the RTNSS program is set up for AP1000, there is

operability checks that are built into the short term availability control program. Periodically, the components need to be -- The key components in the various RTNSS systems that are in that program need to be -- show that the pumps start or any valves that have to move will change position, and that that is considered to be sufficient for their risk importance, and that we do not think we need to put those valves into the in-service testing program.

CHAIRMAN RAY: Okay. Any questions at this point? All right, thank you. Again, please return your line to Mute until you need to speak to us again. Thank you.

MR. CARUSO: The next slide here lists the criteria, the categories, criteria that are used to scope SSCs into the RTNSS program. The first one is pretty straightforward: Any non-safety system that is used, relied upon to meet the ATWS or SBO rules is scoped in.

The second two criteria relate to -- In the passive designs generally the safety systems will perform all the safety functions for 72 hours following the accident with, presumably -- or by design very little intervention by the operators. After 72 hours, it may be necessary to support those

functions with non-safety systems.

That is where this criteria comes from, looking at what safety systems need support from non-safety systems in that period between 72 hours after the accident and seven days.

So the applicant looks at his safety functions, looks at how they are being accomplished, are there non-safety systems that are needed such as being able to -- you know, refilling tanks with non-safety systems or providing for heat removal in the control room, providing heat removal in other rooms.

They identify anything non-safety that they need for that, and it is scoped in. This is the criteria where the Commission has said there are going to be a few specific design requirements associated with this equipment, and the main one is seismic, that this equipment needs to be at lest seismic Category 2.

The rationale is that the equipment doesn't need to function during the earthquake, but it needs to be available after the earthquake and not in a state that I have got to do some fixing.

The buildings have to -- You know, if you've got HVAC and you need HVAC, you need piping systems and they are on the wall attached to the walls of the building, the building better not crumble. The

building -- That equipment better be available to turn on after the accident. That is what seismic Category 2 is.

In some instances --

CHAIRMAN RAY: What defines seismic Category 2, again?

MR. PATTERSON: I would summarize it as saying something that is seismic Category 2 will survive the earthquake and not fail in such a way that it interferes with any safety related component.

CHAIRMAN RAY: Well, that is the first time I have ever heard that definition for seismic Category 2, but I am not disputing it. I would have to go back and look. Does anybody here know?

MR. CUMMINS: This is Ed Cummins. I would use exactly the same definition, and then when you come to the staff and say, well, how do you design something to seismic Category 2, they say design it to seismic Category 1, the loads. So it ends up being -- But the difference between 2 and 1 is that in Category 1 it must function. In Category 2 it must be intact, but the design method turns out to be the same.

MEMBER BLEY: And intact just means it doesn't fall down.

MR. CUMMINS: It didn't fall down and hit

something, and in the case of these things, the intention is that, if it is a tank and it is seismic Category 2, it still has its fuel or water in it. It didn't fail. It didn't have to be a pump over it. It doesn't have to pump, for example.

CHAIRMAN RAY: Well, it has to remain operable is what I heard.

MR. CUMMINS: Which is not typical for -- The word operable in seismic Category 2 don't normally match.

CHAIRMAN RAY: That is correct.

MEMBER STETKAR: I am still a bit confused about that, because if I look at the AP1000 DCD seismic -- whatever it is called here -- qualification -- seismic classification table -- there is a table 3.2-3 in the DCD.

If I look at, for example, the fuel oil storage tanks for the ancillary dc generators, they are indeed seismic Category 2, consistent with what I just heard. If I look at the engines themselves and any equipment attached to the engines, they are non-seismic. So I am not quite sure how that is consistent.

MR. CUMMINS: Ed Cummins again. All this came about in the AP600 time frame based on some kind

of negotiation between the applicants and our customers and the staff. In cases where you have a piece of equipment that was fungible -- you have some of them in your warehouse, and the kind of diesels these are, are in the back of firetrucks.

So we originally started with not providing them at all in the plant and said, whenever we need them, we will deliver them there, and they will start pumping. That sort of got -- In the negotiation that got compromised to say, no, you have to actually deliver them and mount them in your thing, but if they were to fail in the earthquake, bring your next one out. It is replaceable by people doing minor amounts of work. It is a portable piece of equipment.

So portable pieces of equipment, at least in our negotiation, were allowed to be non-seismic, because you could get another one.

CHAIRMAN RAY: Anything else?

MR. PATTERSON: I should point out, this issue would not have been revisited, because it was not amended from the certified design.

MEMBER STETKAR: I am trying to understand RTNSS also in a more generic sense, because I am assuming that the general understanding of RTNSS as it applies to AP1000 should be somewhat consistent with

the general understanding of RTNSS as it applies to any of the other new plants, regardless of what was previously negotiated.

MR. CUMMINS: This is Ed Cummins again. Well, the AP600 was the one who defined it in the beginning, and if you took that philosophy, you would say all the other ones should be like it. At least, if you were me, you would say that. We set the standard initially.

MEMBER STETKAR: Right. I guess the reason I asked, in particular on the seismic, is I saw this as an inconsistency in the AP1000 seismic qualification. I picked the ancillary diesels, because they are the easiest to look at, where the fuel tanks are seismic Category 2, but anything else related to the system is non-seismically qualified. I haven't really looked at the others.

MR. CARUSO: Well, if you went and looked at the ESBWR ancillary diesels, you would find that they are seismic-2, because they are not being trucked in.

MEMBER STETKAR: So they are more consistent with --

MR. CUMMINS: They are more stationary, and as you said, the issue has to do with portability

as opposed to sort of stationary.

MEMBER STETKAR: Is that true for valves welded in pipes in the plant also?

MR. CARUSO: Valves welded in pipes are pretty stationary. One other example I do remember with AP1000 is I think they utilize fans, portable fans, to remove heat from some of the rooms, and they have them stored in a building, and I think in that particular case that building design was allowed to be National Building Code; because they said, okay, well, even if the building id damaged some, I can still go in there and get these fans out. That was another sort of negotiated --

MEMBER STETKAR: Have you ever seen seismic damage?

MR. CARUSO: No.

MEMBER STETKAR: Talk to the folks in Haiti. Now National Building Code is a lot better.

MR. CARUSO: They have this one example with the National Building Code, and ESBWR came in, and they wanted to have all kinds of stuff in buildings with National Building Code, and that didn't happen, because the kind of stuff they were talking about was HVAC connected to the building and pipes connected to the building, and we said, no, I don't

think so.

MR. PATTERSON: I would also like to point out that the part of the building in which the ancillary equipment is located is seismic Category 2, even though it is a non-safety building.

MR. CUMMINS: This is Ed Cummins. And in fact, the fans are not located -- They are located in a seismic Category 1 building. The little temporary fans we store in the nuclear island.

MR. CARUSO: Yes, I have not -- I am not the AP1000 RTNSS reviewer. I wasn't the reviewer back in 1997. So I should probably keep my mouth shut when you talk about AP1000. I will just talk about RTNSS in general, keep my mouth shut. This is our AP1000 review. I did the RTNSS review for the ESBWR.

MEMBER SHACK: The 95-132 statement is a little more general than yours. It says SSC functions relied upon to dissolve long term safety and to address seismic events, which would seem to me to bring a few more things into scope.

MR. CARUSO: Theoretically, but I don't think anything has been brought in for either AP1000 or ESBWR.

MEMBER STETKAR: Mark or Malcolm, I am always searching for specific examples to try to make

me understand this a little bit better. So I had to search for another one quickly here.

Component cooling water pumps are included in the AP1000 D-RAP as RTNSS equipment. Component cooling water pumps are non-seismically qualified equipment.

They seem to be -- They are usually welded or bolted into piping systems, and it strikes me that they are probably not on trucks to bring into the plant to hook in parallel. So explain to me why component cooling water pumps are not --

MR. CARUSO: Because the criteria that scopes them in is not the long term safety criteria, and there is no -- If the criteria that scopes them into RTNSS is it is important from the PRA sensitivity study, there is no requirement for it to be -- If it is seismic, that equipment doesn't -- There is no seismic requirement attached to it in RTNSS space.

MEMBER STETKAR: Question: Has the AP1000 done a seismic PRA?

MR. CUMMINS: We use the margins.

MEMBER STETKAR: Okay. So we don't know the seismic contribution to risk or the relative contribution from seismic failures of these pumps to risk.

MR. CUMMINS: Ed Cummins. Could I try this for a minute? What was seismic and what was not seismic in RTNSS was related to the post-71 hours. Why was it stipulated to the post-72 hours? Well, originally everybody had kind of agreed with URD and said 72 hours was sufficient. Then there was some operating experience, including the hurricane in Florida, where it wasn't clear that support could be brought from off-site within 72 hours.

So the staff wanted to change 72 hours to seven days. So what we agreed to do was to change 72 hours to seven days by using equipment that would be there still in seven days. That is, the component cooling water pump, as an example, is not used in the period from 72 hours to seven days, and the equipment that you want to use or need to use for plant safety between 72 hours and seven days -- since the cause of ability to get to the site might have been an earthquake, you had to have it survivable from the earthquake. That was the theory.

So those equipment that we would use between 72 hours and seven days should survive an earthquake, or if not, you have another one there that you can lift up and put in there.

MEMBER BLEY: Not to be too dense, if you

don't need it in that period of time, why did it end up being RTNSS?

MR. CUMMINS: I think Terry can say this better. In certain plant events like mid-loop operation, for example, it has a contribution to safety, which is important from a probabilistic.

That is not when you are having the earthquake, but it has a reason to be important in some plant conditions.

MEMBER BLEY: So the things that would limit access to the site were things that drove you to --

MR. CUMMINS: To seismic level.

MEMBER STETKAR: A re spent fuel pool cooling strictly post-72 hours or is that --

MR. CUMMINS: The provision of water to the spent fuel pool so that it can boil up is part of the 72-hours to seven days.

MEMBER STETKAR: But that is provided by things like fire systems. Is that right?

MR. CUMMINS: We have a big tank of water, and we pump a little bit of it into the spent fuel and a little bit onto the containment cooling.

CHAIRMAN RAY: Okay.

MR. CARUSO: But you are right, John.

When they do do a seismic PRA, that could --

MEMBER STETKAR: I am just trying to -- You know, I am antagonistic, and I bring up all of these specific examples, but I am actually trying to just get a better handle on --

MEMBER SHACK: What is in RTNSS that includes seismic events.

MR. CARUSO: That was the point I was going to make. The next criteria is you do a sensitivity study with the PRA. You take the non-safety systems out from the PRRA, and you look at what core damage frequency and what LRF I get. If I can meet the safety goals without any non-safety systems, then I scope nothing in from that criteria.

If I don't, then I start to put safety systems back in and look at how important are they to meeting the safety goals.

CONSULTANT KRESS: Don't you have to have a site to determine safety goals?

MR. CARUSO: Well, you are doing a Level 2 PRA.

CONSULTANT KRESS: How do you do that for a design certified design, is what I am asking?

MR. PATTERSON: Well, if you do a Level 1 PRA --

MR. CARUSO: No, he is talking LRF.

MR. PATTERSON: Right.

MR. CARUSO: Large release frequency. It is not a Level 3, based on Level 3.

CONSULTANT KRESS: You just substitute LRF as a surrogate for safety? What value do you use?

MR. CARUSO: Ten to the minus six.

MEMBER SHACK: LRF?

CONSULTANT KRESS: LRF.

MEMBER SHACK: Now ask him what an LRF is.

CONSULTANT KRESS: What if you have four of these plants? You use one-fourth, 10^{-6}?

MR. PATTERSON: Each plant would measured individually.

CONSULTANT KRESS: Okay, but that seems strange to me. Quite a containment performance goals. Is that an LRF?

MR. CARUSO: Conditional containment failure probability goal? It is 10 percent, 0.1.

CONSULTANT KRESS: Is that redundant to an LRF?

MR. CARUSO: I think in some respects it is.

CONSULTANT KRESS; Just checking.

MR. CARUSO: So in that case, they do the

focus PRA sensitivity studies, and identify any non-safety equipment that can be relied on or can cause them to meet the goals.

With respect to PRA, they also look at the impact of non-safety systems on initiating event frequencies, and I need to say something about this bullet here before I hear loud noises from over on that side of the room.

It says here that anything that could cause an initiating event to significantly affect CDF or LRF would be scoped in. They really -- The criteria is sort of broken up into a set of screening tests: You know, does a non-safety system impact any -- is it factored into the calculation or determination of any initiating event frequency? And if it is no, then it is immediately screened out.

Then the second criteria is does it increase the initiating event frequency? If it does, you get a necessary condition to keep it in. then you look at, well, does that increase -- how does that increase affect CDF and Large Release Frequency?

In the RTNSS report for the AP1000, the criteria actually needs to be 10 percent increase in CDF -- 10 percent of CDF, contribution of 10 percent to CDF or LRF to be scoped in. However, the reason I

have one percent on this slide is in the evaluation they essentially used a de facto one percent. They found that, for the most part, they were getting for the non-safety SSCs that were affecting initiating event frequencies, they were getting .2, .1 percent contributions.

In one case, they got a 1.4 percent contribution to CDF and a 7.5 percent contribution to LRF, and they decided that that was big, and they would put it in anyway. So in the actual evaluation, they were somewhat concerned and scoped in SSCs that didn't meet their published criteria. So this one percent represents what was actually done as opposed to what the stated criteria is in the WCAP report.

The equipment that is relied upon to meet the containment performance goals -- and those goals are the conditional containment failure probability, .1; and also a deterministic goal which is to maintain structural integrity ASME service level C, I believe, of the containment for 24 hours.

The last criteria is that applicants are required to do a systems interaction evaluation, and they use a process, I believe, that was outlined in the Generic Letter sometime ago. Systems interaction was an unresolved safety issue for a number of years,

and it was resolved with defining a process to devaluate, you know, are there system interactions that can impact safety systems.

Here, it is looking at either an interaction from a non-safety system or, in effect, the passive systems is primarily what you are looking at. If you needed to add something in to solve that problem or make that interaction go away, a non-safety piece of equipment, that would be scoped in.

So those are the criteria that are used to decide what SSCs will get some sort of treatment.

Now what I said in the beginning was, once you define the SSCs, you try to decide what treatment should they get, and you basically identify their importance If the SSC is something that is in the PRA, you have the PRA to help you look at its importance, your importance measures, your assumptions of reliability and availability. If it is not in the PRA, then you need to do some sort of judgment.

The Commission's guidance and the policy is not real well defined here in terms of how you map these reliability/availability missions to treatment.

It basically says you should do a graded approach. It is really important, you know. You

should give it more important treatment.

Now in one case there is sort of a very distinct criteria, and that is scoping something into tech specs. Here it is pretty well defined. If, in fact, -- and this has been the practice of both AP1000 and the ESBWR. If in fact, the piece of equipment came from the criteria that involves whether or not you meet the safety goals, if that piece of equipment is the one that gets you over the hump, it goes in tech specs. That has been what is happening.

That is based on -- There is a regulatory criteria here. If you look in 50.36(d), the criteria for what goes in tech specs, there is criteria 4 that says anything that has been shown to be risk significant or important in operating experience, it should be in tech specs. That is essentially the regulatory foundation of that particular treatment decision.

Other than that, for the most part, everything else is being pretty much treated with the availability controls. So it is really in two groups. It is either in tech specs or to the availability controls, the D-RAP program and, as I said, in these particular cases of some of the SCCs that affect initiating event frequency, they will go back and

improve the design for tolerant, digital feedwater controllers, that sort of thing.

So the last slide I have here is just a summary of what in the original design certification, not the amendment -- what was -- a listing of the equipment, the major pieces of equipment that were scoped into RTNSS and the category that put them in there. I wasn't planning to go through all of this, but I, just for completeness, wanted to include that.

So if there's no questions for me, Malcolm is now going to talk about how RTNSS was treated for the AP1000 amendment.

CONSULTANT KRESS: I have a question on the previous slide. Why was one percent chosen as being significantly affect CDF and LRF?

MR. CARUSO: Well, it was actually -- Ten percent was actually chosen. One percent was used.

CONSULTANT KRESS: Okay. I'll buy that then. What CDF are you talking about?

MR. CARUSO: Ten to the minus four.

CONSULTANT KRESS: Ten to the minus four? Thank you.

CHAIRMAN RAY: Okay, Malcolm.

MR. PATTERSON: I am Malcolm Patterson. I am in the Office of New Reactors in the PRA Branch. I

was responsible for the review of the AP1000 amendment, which focused primarily on changes to the D-RAP. There were not many. There were a few design changes that resulted in the addition of components.

There were a number of components that, as a result of design changes or a refinement of the PRA, dropped below the setpoint for being included, but Westinghouse retained all of those rather than creating an argument over small numbers.

What we did get involved in, in our review, was the criteria that they characterized these components. Sometimes common cause failure remained an important reason for keeping an item on the D-RAP, and Westinghouse, because the basic event important for a given compliance had dropped below the threshold we were using of a raw of 2 or higher, they said, okay, we are keeping this on the list because the expert panel says whether it should stay on the list.

While that is a good reason, in our view, it was still an issue that common cause failure would have put it on the list, and so we wanted to make sure that sometime in the future someone doing a design change would understand all the reasons why something was in the RTNSS program or was on the D-RAP. Go to the next slide.

I wanted to talk briefly about the reliability assurance program, because in the case of AP1000 essentially everything that has been scoped into the reliability assurance program is either safety related or it is in the RTNSS program. If it is non-safety related, it is RTNSS. If it safety related, it is already covered under the Appendix B QA program.

We made sure that anything that was in the RTNSS program was included in the reliability assurance program. Up to the time of COL, we were primarily concerned about the design controls from Westinghouse. Once a license is granted, however, this shifts to a concern over the COL applicants' QA program and the RTNSS QA program.

The reliability assurance program is broken into two stages. They are divided by fuel load. Prior to fuel load, it is called the D-RAP, and after fuel load it doesn't have a name as a program. It comprises operational phase reliability assurance activities.

The reason we don't have a program is it would be redundant. We already have maintenance rule, IST, ISI, various programs in place, the QA program, that provide all the assurance we need to make sure

that these components are maintained as reliable throughout the plant's operating life, as they were assumed to be when we did the PRRA and the certification of the initial design. Next slide, please.

So we were looking at changes in the program, either the Westinghouse program or the COL applicant's program, and changes in scope. As I said, the changes in scope were primarily due to minor design changes. For example, the addition of a remote DAS station, so that manual actuation of containment isolation valves could be performed outside of the control room. This was added, because it was one of the ATWS criteria. There were -- Next slide, please.

There were no changes to the programmatic requirements. They, basically, as I said before, the same 18 points that you will see in Appendix B QA program, just slightly modified requirements for stringency. Next slide.

Some of the other items -- some containment isolation valves were added, check valves in the normal heat removal system, and some non-1E alternating current buses. Next slide, please.

In the COL stage, there have been no deviations from the DC program. We did make sure that

there was a plant-specific QA program treating the RTNSS added to each COL's FSAR in Section 17.5 where the entire QA program is addressed.

That was all I prepared on this. If there is anything else you would like to know about the DC or COL applicants as far as their RTNSS programs?

CHAIRMAN RAY: Well, when you talk about changes, you are talking about changes associated with the amendment to the CD?

MR. PATTERSON: Yes.

CHAIRMAN RAY: You are talking about COL changes -- what are we talking about?

MR. PATTERSON: Well, originally the COLs had said we are incorporating the Westinghouse D-RAP by reference. Unfortunately, that was Westinghouse's QA program, and the licensee has to have responsibility for their QA program. So it was necessary to get them to amend their initial applications so that the COL made it clear that it was a COL-specific QA program that was being used to address RTNSS.

CHAIRMAN RAY: You are talking about changes from the initial application as a part of the review process?

MR. PATTERSON: Right.

CHAIRMAN RAY: Not change from something else?

MR. PATTERSON: Right. Well, it was a change from the DC. The DC didn't address the QA program that the COLs were going to have to apply in the future.

CHAIRMAN RAY: Okay. But it is change in a different sense. In any event, I understand what you are saying.

Okay, any questions on RTNSS? We have had a lengthy review of the generic as well as the specific application.

Anything, John, that you want to add to our list, to-do list here associated with your queries?

MEMBER STETKAR: No. I need time to think more carefully about the rationale of all of this process. So i can't think of anything specific, Harold.

CHAIRMAN RAY: Okay. Well, the specific thing that came to my mind is I need to think, I guess, about the seismic Category 2 and what the heck it means.

MEMBER STETKAR: That is the one that bothers me the most, quite honestly, in terms of

apparent -- I don't want to say -- apparent is too strong -- possible inconsistencies in terms of the criteria that used to populate the D-RAP list versus criteria that are used to, for example, apply seismic Category 2 design requirements to things. That, and to a lesser extent, environmental qualification.

I really need to think more carefully, because I think that there seems to be some very subtle distinctions being made -- let me put it that way -- about those decisions. It is not clear to me how they are made and how consistently they are applied, and what I am looking for is kind of a consistent process across all the new reactors. We are only talking about two designs right at the moment.

MR. CARUSO: I think it would be helpful to read the staff evaluations of RTNSS. I know for a fact in the ESBWR, because I was sort of the overall coordinator of it -- I am not a structural person, but the SER -- The review of the seismic Category 2 and how it was defined was very detailed, and there was a number of questions about loads and calculations, and it is really in depth. I think that might be helpful to go look at that, because I think that is where the rubber met the road, was in those technical reviews.

CHAIRMAN RAY: Weidong, I think this is not a matter for Westinghouse at this point, but we need to somehow understand better as a committee what seismic Category 2 means in the context of RTNSS.

Okay. With that then, we are at the point where it is two o'clock. It seems prudent for us to proceed with what are called in the agenda for today RCP issues. Is that possible?

MS. McKENNA: Yes, certainly. Westinghouse, you are prepared on the reactor coolant pump?

MR. SISK: Yes. Just a few minutes. We can put the presentation up, and we are prepared to talk about reactor coolant pump.

CHAIRMAN RAY: All right. Then we will take a break after that.

MR. SISK: Okay.

MR. CUMMINS: This is Ed Cummins. while we are waiting, I think it is only in the context of a subset of RTNSS, this post-72 hours, where you get into this seismic Category 2 issue.

CHAIRMAN RAY: It may be, Ed.

MEMBER STETKAR: I think, Ed, a little bit of what I am concerned about is, if you had done a real seismic risk assessment, you might find that

seismically qualifying some of those RTNSS systems could help the seismic risk considerably.

So in terms of quantitative contribution to risk, one of those categories, had their been a real seismic risk analysis done, one of those categories might have led you to different decisions. Absent that, it is not clear.

MEMBER BLEY: Harold, there is one thing I haven't quite wrapped my head around yet, and that is how these negotiations that occurred on AP600 on RTNSS and seismic have been, can be, ought to be translated into consistent policy. I haven't seen that gap crossed anywhere.

That doesn't apply here so much as that is a more generic issue for the staff.

CHAIRMAN RAY: Yes. We are mindful, of course, that AP1000 has been certified, and I think what was referred to the AP600 context was things that happened prior to that time.

MEMBER BLEY: Which set up the AP1000.

CHAIRMAN RAY: Correct. Our interest is in trying to make sure we understand that background.

MEMBER BLEY: How it ended up, if that is where we want to be in the end, and how that translates to the next one.

MEMBER STETKAR: I think the caution is that they were saying, well, right at the moment, we have AP1000 which is, in fact, a certified design, and ESBWR which is in the process of being certified.

Well, okay, I think what Dennis' concern and mine is also is that, if we can formalize that process a bit more, thinking into the future, perhaps there would be a third passive design proposed at sometime, and understanding that process a little bit better and the criteria that are used would be helpful rather than kind of renegotiating it as each new design comes in and we think about things a little bit differently.

CHAIRMAN RAY: Okay, fair enough. I was just trying to put it in the category that it is not on Westinghouse's to-do list at the moment. It has got to be something we begin at least with our own understanding of how we got where we are, so that we can draw from that any generic conclusions or at least the direction that we want to take.

So, Weidong, we will incorporate this last little bit of discussion in the same desire to understand seismic Category 2 better, given that Dennis' point is that let's bear in mind that that emerged from a whole set of negotiations over a long

period of time, and we probably need to understand that as a starting point anyway.

Okay, Reactor Coolant Pump Flywheel -- what an interesting subject. Dale, we are looking forward to this, I think.

MR. SISK: Mr. Chairman, I was just going to suggest, we are ready, but I do want to caution that we are going to try to keep this presentation as nonproprietary. There are potential for us to go into a point where we may have to defer.

We certainly want to answer the questions, but we may defer those to a later point. I have asked Dale to just highlight when we start to step into a proprietary issue. Otherwise, we are looking forward to the discussion.

CHAIRMAN RAY: That is fair enough. So don't hesitate to tell us. We will have to go into closed session if we want to pursue a particular line, but at least from my standpoint -- I speak just for myself -- this is a matter of trying to learn from an experience, more than it is to question where you are today in terms of the design of this thing, but to look at it from the standpoint of what the experience should be able to tell us about all kinds of things that we get involved in when certifying design. So go

ahead, with that background.

MR. WISEMAN: I am Dale Wiseman from Westinghouse to talk about the flywheel, and really try to summarize all the changes that we have made between DCD, Rev. 15 and Rev 17. The particular questions were on materials and inspection requirements. That also leads us into a summary of our inertia changes, which we have talked about somewhat in the past, and our flywheel missile analysis summary.

MEMBER ARMIJO: Before you go too far, could you -- The original intent was to get a longer coastdown on your pump. I think that was why you increased the mass of that flywheel. At least, that is what I got out of some of your documents.

What were you trying to achieve as far as extending the coastdown of the pump by making a more massive flywheel?

MR. WISEMAN: When you say more massive, you mean --

MEMBER ARMIJO: Heavier.

MR. WISEMAN: -- between DCD's 15 and Seventeen?

MEMBER ARMIJO: Correct. Yes.

MR. WISEMAN: I will get into that, but

basically it is the fact that, as we went through detail design and learned more about the losses inside the pump, we needed more inertia to meet the coastdown requirement that was in the design spec, to start with.

So it was essentially adding inertia to meet the design requirement in the pump.

MEMBER ARMIJO: Could you put that in units of time, like minutes?

MR. CUMMINS: This is Ed Cummins. It is flow. What we want is a flow curve which matches the power decay for the curve when you trip. So if the flow was somehow behind the power, then your power to flow would mismatch, and you would have core problems. So we want a flow close down-curve on loss of AC which matches the power curve of a trip. That is concept.

MEMBER ARMIJO: Okay. That is what you were doing with this?

MR. CUMMINS: That is what the inertia is for.

MEMBER ARMIJO: Okay.

MEMBER BONACA: Suppose you have minimum DMB before.

MR. CUMMINS: Sure.

MEMBER BONACA: Do you have a volume for it?

MR. WISEMAN: Yes. The limiting event that really drives the inertia or the coastdown requirements is for complete loss of flow, and that is part goes into the -- The ultimate is to meet the DMBR margins, and that -- In the complete loss of flow, that all critical part happens three to four seconds after you lose your flow. So the critical part of the coastdown is in the first six to eight seconds, to give you a time frame.

MEMBER ARMIJO: Okay.

CHAIRMAN RAY: But we got -- All of us have little things that we want to get to, but I keep asking myself, why is this a change in the certified design, and why isn't this just part of the implementation of the certified design? So answer that as you go along here, would you. What is it that you had to change in the certified design in order to achieve what I think we all understand to be the requirements that you are trying to meet?

MR. WISEMAN: Okay. Just to start to orient everyone, there are two flywheels in the AP1000 reactor coolant pump, the upper flywheel assembly between the upper radial bearing and the impeller, and

then the lower flywheel assembly that is located in between the upper and lower truss bearing.

MEMBER ARMIJO: One is bigger. I am just looking at the sketch there.

MR. WISEMAN: They are both the same diameter. The upper is longer.

MEMBER ARMIJO: Okay.

MR. WISEMAN: This summarizes the change, really, from DCD Rev 15 to 17 in the flywheel design. The DCD Rev 15 was based on a depleted uranium alloy flywheel using depleted uranium for the heavy metal in the flywheel.

This was a carryover from AP600. This was the original design on AP600, and it has -- The depleted uranium was enclosed in an alloy 690 enclosure, but the uranium itself was the structural component of that design.

In Rev 17 -- and I have a slide discussing the reasons we made all these changes following here. So this is just to show you the two designs. We went to the -- We got rid of the depleted uranium for various reasons, which we will discuss, went to heavy tungsten alloy insert, as you see.

There is an inner hub that is shrunk onto the shaft. The tungsten alloy inserts are then shrunk

between the hub and this outer retaining ring. So the retaining ring and the inner hub become the structural components. The tungsten alloy or the heavy metal, in this case, is no longer a structural component in this design.

MEMBER ARMIJO: They are segmented. Right?

MR. WISEMAN: They are segmented.

MEMBER ARMIJO: So they are just held by the retaining ring against the hub.

MR. WISEMAN: Onto the hub. That is correct. Here are the flywheel materials as they evolved from DCD 15 through 17, and actually one step beyond Rev 17.

We include in a response to some RAIs on the reactor coolant pump materials. Back in May 2009 we included a change to the retainer ring beyond the Rev 17 design. But the shaft is stated as 403 stainless steel. The inner hub is also 403 stainless, and as you can see here, from 15 to 17 the actual heavy metal has gone from depleted uranium to tungsten alloy.

The retaining ring was initially 18 nickel maraging steel. That has recently been changed to this chromium, 18 manganese material, and the

enclosure, which is not a structural part but is to seal all those internal components from the reactor coolant, was originally alloy 690 and was changed to alloy 625.

MEMBER ARMIJO: Why were those changes made, both for the enclosure and the retainer ring?

MR. WISEMAN: Can you wait two slides, because I go through all the reasons here.

MEMBER ARMIJO: Sure.

MEMBER ABDEL-KHALIK: Is there a difference in the thermal expansion coefficient between --

MEMBER ARMIJO: Yes, big differences.

MEMBER ABDEL-KHALIK: -- the tungsten and the material of the inner hub?

MR. WISEMAN: The tungsten, yes. there is some difference. It is not huge, but there is some difference, yes.

MEMBER ABDEL-KHALIK: Can you translate that into a change in radial dimension as you go from cold shutdown to hot standby?

MR. WISEMAN: No, I can't. I can't off the top of my head tell you how much difference that makes. But one of the changes to the enclosure was to better match thermal coefficient expansion

coefficients going from the 690 to the 625. So that has all been part of the design effort.

MR. CUMMINS: This is Ed Cummins. Dale, the operating temperature of the inertia is not reactor cooling system operating temperature. It is something lower than that.

MR. WISEMAN: Well, that is true. The flywheel normally operates in the 300 degree range, but there is still -- Right. There is still an effect of the heatup, certainly. Yes.

MEMBER ABDEL-KHALIK: Was that part of the analysis, figuring out what the thermal stresses associated with the change in the differential expansion?

MR. WISEMAN: Yes.

MEMBER ABDEL-KHALIK: What is the contribution of that, during the heat up?

MR. WISEMAN: I can't tell you. I don't know that detail of the analysis. We could find that out. I can't tell you.

MEMBER ARMIJO: There is a report that the staff provided us, a Curtiss-Wright report that was done, that has a lot of that information on thermal expansions and the stresses and all of that.

MR. WISEMAN; Yes. That Curtiss-Wright

report has both the structural and the thermal effects and the resulting stresses.

So as to the reasons for some of these material -- for all these material changes: In the change from depleted uranium to heavy tungsten, the real driver here was the fact that it was determined that our losses in the pump were significantly higher than we had originally anticipated. So we needed to add inertia.

MEMBER ARMIJO: Was that the result of a test pump or some experiments or just --

MR. WISEMAN; No. At that time, it was the result of more detailed calculation and reviews that revealed some losses that weren't adequately accounted for.

So the most efficient way to get inertia is to increase the diameter of the flywheel, but if we increased the diameter of the depleted uranium, since it was a structural component, we were getting stresses that were exceeding the allowables in the uranium.

If we made the flywheels longer to get sufficient inertia, we ran out of space we have for the pump. So at that point it was determined we needed to find a different material, and the tungsten

alloy has almost exactly the same density as the depleted uranium, and it has many advantages over the depleted uranium also. Some are listed here.

By the time we were working on AP1000, the depleted uranium vendors had pretty much disappeared compared to when we started on AP600, and the fact that the tungsten alloy has ASTM specs and you don't have to have permits to handle it, and it is not an environmental issue. So there were lots of things that said it is time to move away from depleted uranium.

At the same time, looking at the configuration, it was determined it would be better to not have the heavy metal as the structural component. So that is when the made the configuration change to add the inner hub and the retaining ring, and the tungsten alloy essentially sits in between the two.

The flywheel enclosure changed from 90 to 625, as I mentioned earlier. There were really two reasons driving that. The 625 has a lower coefficient of thermal expansion which better matched the components inside the enclosure. it also has a higher yield strength, and it is really easier to weld. So that was the driver to go to 625.

The retaining ring --

MEMBER ARMIJO: Before you go on, did you consider the 625 and the 690 equivalent from a standpoint of possible stress corrosion cracking problems in the coolant environment?

MR. WISEMAN: To my knowledge, there wasn't much difference between the two in that regard. That was not indicated as a strong driver by EMD. They were both considered to be--

MEMBER ARMIJO: Are there test data or experimental data that kind of justifies that belief?

MR. WISEMAN: I don't know for sure. I know that we have used some 625 in some of our fuel assembly nozzles without any --

MEMBER ARMIJO: Maybe Bill knows, but I have seen a lot of test data on 690.

MEMBER SHACK: Well, there is a whole lot less, but I mean, the 625 performance has been fairly good. It is much more limited, but I don't know that -- I can't recall problems with it. People use it when you need high strength alloys, and it has worked reasonably well.

MEMBER ARMIJO: Yes. It seems, 690, we know so much more about.

MEMBER SHACK: Yes. You certainly have a lot more data on 690. No question about it, but again

this is at 300. You know, you are down in temperature.

MEMBER ARMIJO: Yes. Some of the analyses in the -- and I don't know if these are in the Curtiss-Wright report -- go up to 400 and in some cases even a little bit higher. So I don't know what the actual -- That may be the mean operating temperature. What would your sustained highest operating temperature be? Is it really 300?

MR. WISEMAN: The nominal is in the 300, low 300 range. there is some gradient through the flywheel.

MEMBER SHACK: I mean, you take a steam generator from 600 to 550, and you buy one heck of a lot. So going from 550 down to 400, I would suspect it.

MEMBER ARMIJO: You're right.

MR. WISEMAN: So the retaining ring change -- When we first added the retaining ring, we were using the 18 nickel maraging steel because of the desire to have the highest high strength, and there was a flywheel mock-up done. It was a full diameter, but not as long as the actual mock-up. It was done really for manufacturing -- confirming manufacturing procedures and assembly procedures and to be able to

demonstrate that it could be balanced.

In the course of that program, we had the retainer ring crack, and the subsequent investigation revealed that during the machining processes there was some water introduced into the assembly, and as a result we had hydrogen-assisted stress corrosion cracking.

Initially, Curtiss-Wright went back through their manufacturing procedures to eliminate moisture, but no one was really comfortable with that risk moving forward. So we started looking at a material change for the retainer ring.

This is the material change we included in a response to an RAI in May of 2009 to the staff. It was an RAI that was related to materials in the reactor coolant pump. That is when we included this change.

The change was to an 18 chrome-18 manganese material, which was a material that was developed for retaining ring applications in generators, essentially for the same kind of reasons, the cracking in the existing material.

This material has been shown not to be susceptible to corrosion or hydrogen-assisted stress corrosion cracking. Its drawback is that it doesn't

have the strength of the 18 nickel maraging. So it means that in the -- Since we are limited in overall space, we needed a little thicker retainer ring, takes a little bit off of the tungsten alloy mass.

MEMBER ARMIJO: How much do you know about this? How much actual experience is there with this 18 chrome-18 manganese? This is very unusual stainless steel. People don't normally add that much manganese to stainless steel.

I did do a little bit of reading on the change for the generator problem, the cracking of the generator problem. It is not clear to me what the real root cause is. Maybe it is hydrogen embrittlement, but in your application it should be dry.

If it is manufactured properly, as long as those outer containers keep the coolant out of it, it should be dry, but in the event it doesn't, small leaks or something in your enclosure, yo know, you've got -- for these kinds -- and it is a high stress on that component. You've got -- I just wonder if you have done any testing to demonstrate that this stuff won't crack in a kind of a violent manner in the event you get a leak in these enclosures.

I don't know how often you would inspect

those enclosures to make sure they weren't leaking. Would you ever know?

My question is: What do you know about this material with respect to a stress corrosion cracking susceptibility or hydrogen embrittlement susceptibility in the environment that might occur if those enclosures had any kind of leaks?

MR. WISEMAN: My understanding is there has been testing. There has been some testing done as far as looking at susceptibility to stress corrosion cracking.

MEMBER ARMIJO: Was that done by Westinghouse or for this?

MR. WISEMAN: No, it wasn't done for this particular application.

MEMBER ARMIJO: For the environment that you are going to be in. That is really -- You know, stress corrosion cracking is so specific to the environment. If somebody has done some fluoride stress corrosion cracking test somewhere else, doesn't mean that it will in your environment.

So you said you don't have any data like that?

MR. WISEMAN: I personally don't have any of that data. Curtiss-Wright has indicated that they

have some test data. We could look into getting that.

MEMBER ARMIJO: I would sure like to see it, if it is available.

MR. WISEMAN: This slide summarizes our inertia changes that we have talked about in the past. So in DCD 15 we had a rotating inertia of 16,500 pounds per square foot, and it was between Rev 15 and Rev 17 that we determined that we needed sufficient -- quite a bit more inertia.

This is the 15 to 17 change. Going back to how this changes the licensing, there was a -- or there still is an ITAAC in Rev 15 that was to show that you had a certain amount of inertia, 16,500 or greater.

As we got into looking at the -- reviewing our losses and learning more about our losses, it became obvious that that ITAAC wasn't really sufficient.

CHAIRMAN RAY: Well, but, Dale, that is what I was saying in the beginning. To me, maybe one of the lessons here is that the ITAAC should have said you need to show that you have sufficient inertia.

I sit here wondering why are we going through all of this detail which, clearly, you would expect you guys would go through, but why are we going

through it?

If the ITAAC, in the first place, had said not 16,500 but sufficient inertia to demonstrate that you will match the flow required, well, why wouldn't that have been okay? Now that is a rhetorical question you maybe don't want to answer, but that is what I am wondering anyway.

MR. WISEMAN: Well, that is essentially what we changed the ITAAC to in Rev 17. It said that you had to --

CHAIRMAN RAY: You are not going to come back in here and tell us about the next dadgum change you make, huh, I suppose?

MR. WISEMAN: Only if I am asked.

CHAIRMAN RAY: Well, I am being a little facetious here, but really, this is a lot of detail, but it is the kind of thing I would expect to have happen as you go forward. I just don't know why we don't specify what the performance requirement is.

MEMBER ARMIJO: I wasn't so interested in the fact that the ITAAC was improperly written as it was a change in a material, which I am always suspicious about, to a material that is a rather unusual structural member and, if it comes apart, it is going to give you a bad day.

I have looked at your other analysis and your other slides, and I agree. You've got plenty of margin getting past the casing, but it is still not -- It wouldn't be good in use for the plant.

So I just was trying to find out if you had really considered and run test programs, something to check the environmental -- the performance in a deteriorated environment. If it was perfectly dry in there and that 625 couldn't leak or you can inspect it periodically, show that it wasn't leaking, you know, I don't have any problem. It is just another material. But this is a very unusual material.

CHAIRMAN RAY: Well, I wasn't meaning to say that the only thing you needed to know about it in the certification was the inertia requirement because, clearly, the failure modes and effects are important.

I don't think the reliability, as important as that is -- and I was deeply involved in a plant in Colorado that failed because of the circulators not being reliable. So I know how important it is to you all, but -- Anyway, I have said enough. Go ahead.

MR. WISEMAN: Okay. So the -- As I mentioned, the space for the tungsten heavy alloy was reduced slightly when we went to the new retaining

ring material. So the inertia, as you can see here, decreased slightly. We still have margin in our coastdown curve to what is required to meet our minimum DMB requirements.

As far as inspection, there are -- We essentially impose during fabrication the inspection requirements from NB-2500. This is along the guidelines of Reg Guide 1.14. We take exception to some of those, because this is not a steel plate flywheel, but we are trying to live to the spirit of that Reg Guide by imposing the 2500. So the inner hub has an ultrasonic exam, mag particle, and after final machining a liquid penetrant examination of the inside surface.

The retainer ring has a PT, a UT, and then again after the final machining the outside surface is examined.

The enclosure: Again, it is a non-structural member but, obviously, the integrity of the welds is important. We do a dye penetrant of the welds, and there is a helium leak test performed on the flywheel enclosure after it is assembled.

There is mechanical testing of the inner hub and retainer ring material, and essentially there are no in-service inspection requirements. The key to

that is the fact that our flywheel missiles -- if there would be a flywheel missile, it would be contained within the pressure boundary and would not penetrate the pressure boundary.

In-service inspection of the flywheel would require a pump disassembly and a flywheel disassembly, really, to get to the structural parts.

CHAIRMAN RAY: Basically, you have to be able to survive a failure of the flywheel, try to avoid it, but if you can survive it, then that is the only way you can get by without in-service inspection, which has all these drawbacks.

MEMBER ABDEL-KHALIK: Is it proprietary to talk about the specific tungsten alloy that you are using?

MR. WISEMAN: It is in ASTM.

MEMBER ABDEL-KHALIK: How brittle is this tungsten alloy?

MR. WISEMAN: I think the fracture toughness requirements is like 35. It is -- I would say it is on the brittle side.

MEMBER ARMIJO: It is segmented. So it is not a structural member These are a bunch of segments that are put around.

MEMBER SHACK: Just chunks.

MEMBER ARMIJO: They are just chunks, right. So they are not doing any structural --

MEMBER ABDEL-KHALIK: The fracture toughness you would worry about is the retaining ring, yes.

CHAIRMAN RAY: They may have missed it. I think -- Are we going to talk about that analysis, because that, to me, is the only thing that is important to hear. If the retaining ring fails, then what?

MR. WISEMAN: That was my next slide. I think in your handout -- Just before I forget, I think there as a mistake here on the retainer ring for DCD 17. As you can see up here, it is AMS 6519. I think your handouts may say ASTM. So that was -- We didn't get that corrected in the handouts.

So the flywheel missile analyses -- and these reports on this missile analysis and the stress analysis of the flywheel have been submitted to the staff, and it is basically following the procedure of what they look at in turbine disc fractures, and it is Hagg and Sankey semi-empirical method which looks at two different stages of penetration, the first inelastic impact and transfer of momentum, and then dissipation of the rest of the energy of the missile

in plastic tensile strain.

So in these calculations we take a pretty conservative approach in ignoring anything with the enclosure or the retaining ring. Assume the retaining ring has failed, obviously.

For the pressure boundary components that we look at, take the minimum ASME material properties assumed that at the design temperature. So it is a higher temperature than it would be normally operating. We assume all the heavy alloy segments impact the pressure boundary.

The upper flywheel essentially impacts the stator closure and the thermal barrier material, and if you look at the upper region there, there's several --

CHAIRMAN RAY: Can you go back to this picture for a second?

MR. WISEMAN: You can see, there's several lengths of -- This is the material over here, and we take a conservative thickness that doesn't even -- if you look at this ring in here, it is probably the thinnest material. What is actually used in the analysis goes back to this where we have a little step change there.

So just to say that it is a -- We tried to

take very conservative assumptions into what the pressure boundary thickness is when we do these.

The margins that we have -- When we talk about margins, what we are saying here is margin is the energy required to fail the pressure boundary, to penetrate the pressure boundary divided by the energy that is in one of these missile fragments.

CHAIRMAN RAY: And we talked about this last time you were here, and I can't remember the answer. My bigger concern is creating a path from a rad coolant system through the cooling service water, whatever it is referred to as the cooling supply to the pump.

Now as I recall, you said that wasn't possible, not credible.

MR. WISEMAN: No.

CHAIRMAN RAY: Loss of Coolant Accident, I don't worry about so much as I do pressurizing the cooling system with reactor coolant.

MR. WISEMAN: The missile would come off here, which would stop short of hitting the heat exchanger, and I guess I am not sure what your concern is beyond the heat exchanger.

CHAIRMAN RAY: Well, that you would get a path that would -- Instead of just loss of coolant to

the containment, you would get a pathway into the heat exchanger and thereby into the cooling water system. In other words, it would rupture but not only the rad coolant pressure boundary but the heat exchanger. Not possible?

MR. WISEMAN: I don't see how. The heat exchanger -- This piping is all -- This is the high pressure piping, and the tubes in the heat exchanger are the high pressure reactor coolant pressure boundary here, but the flywheel will be contained back in -- Any fragment would be contained back here.

CHAIRMAN RAY: That is what I seem to recall, was you said it was not a credible -- There is no missile that can penetrate to the heat exchanger cooling coils.

MR. WISEMAN: No. No, you can't get to the heat exchanger tubes. You can, obviously, block the cooling flow to the heat exchanger, but--

CHAIRMAN RAY: I am really just worrying about the one thing that I mentioned, which was that there is no credible missile impact on the heat exchanger.

MR. WISEMAN: No, because the heat exchanger is all outside the pressure boundary of the pump central here.

MEMBER BLEY: If that is what you are worried about, Harold, I don't know what that heat exchanger looks like internally, but this thing probably goes through some pretty violent shaking if this should happen. So you might break some of those tubes, and then you would have the situation maybe.

CHAIRMAN RAY: I don't know.

MEMBER BLEY: You still wouldn't.

CHAIRMAN RAY: That is a different question of what dynamic effects.

MEMBER ARMIJO: Let's just say hypothetically one of these things failed. It would bring your pump to an immediate stop, and what accident analysis have you done that addresses the consequences of that event? What kind of event is it? Is it one of those infrequent?

MR. WISEMAN: It would be like a locked rotor event.

MR. CUMMINS: Ed Cummins. Probably it is a Class B accident, and it is basically a seizing of one of the pumps. So it absolutely stops, and that is the worse thing you can do, which won't happen here.

MEMBER ARMIJO: You still have the other pump going on that generator, and you've got three other pumps cooling.

MR. CUMMINS: Three other pumps, but you get a trip, and it is a challenging accident.

MEMBER ARMIJO: And you've had a bad day.

CHAIRMAN RAY: I would worry about the attachments to the steam generator, but that is also beyond our scope here. That much rotating mass all of a sudden stopping -- geez, I don't know what it would do to the attachments, but it would be a mess.

MR. WISEMAN: That is part of our analysis, yes.

MEMBER ARMIJO: You know, this is -- I got interested in it because of the change of the materials at this stage of the game and the fact that this retaining ring, which I think is the key issue, is an unusual material, that it is not well tested, and although the safety analysis on the penetration of the shell - you've got plenty of margin there.

I just seem to think that there is -- with a new material, unless you test it, you've got some --I have some concerns, but it is not in the sense of a safety concern, but I would test it.

CHAIRMAN RAY: Is that it, dale?

MR. WISEMAN: Yes, other than just to say that the minimum margins that we are showing for our current design are like 1.8, a factor of two for

penetrating the pressure boundary.

CHAIRMAN RAY: Yes, like I said, penetrating the pressure boundary is one thing. The dynamic effects of seizing the rotors and other -- After the break, we will take up and devote the rest of -- most of the rest of today anyway, there's two other items to talk about, to our action item list.

This is one item that is on there from my standpoint. I am satisfied by this presentation. The other members speak for themselves. So we, I think, have addressed the concern that I had. So appreciate it, Rob.

MR. SISK: Glad we could solve an issue.

CHAIRMAN RAY: I am only speaking for myself at this point.

In any event, we will take a break, please, until three o'clock, at which time we will take up, with Eileen's help, the list of action items.

I remind everybody that at this point we are down to -- on both the COL and the DCD, down to the point where we only have for the initial pass 3.7, 3.8, and Chapter 6 of the DCD itself to go, which is not to say we are done, but we will be working a good deal off the action item list after this. That is why it is important to get it straight. Three o'clock,

please.

(Whereupon, the foregoing matter went off the record at 2:46 p.m. and went back on the record at 3:00 p.m.)

CHAIRMAN RAY: Okay, thank you. We are going to resume here now. The next event is going to be real sausage making, and I need my sausage maker over here. Where is Weidong? So I have to fill time until he shows up, I guess.

In any event, this is the fourth two-day meeting that we have had to date, and Mike Lee originally and now Weidong is responsible for keeping this list that we have in front of us here for the ACRS staff.

WE match it with the list that Eileen keeps, which is perhaps a little bit longer list, and I think that is really what we are looking at here, is Eileen's list. But in any event, they are compared to try and make sure that we are keeping track of the items that are raised during subcommittee meetings.

At this point or perhaps after the final increment of initial review, we will want to deliberate at the full Committee about whether we simply continue on from that point as final SERs are developed or whether we have something we want to say

as a full Committee as a result of this review.

So in order to get ourselves in the position to do that, we need to go through this action item list and try and make sure that it accurately reflects what we believe, and we aren't sending people off to chase wild goose chases after things that we are really not needing to pursue further.

So anyway, what we see here in front of us in this table I would like to go through now with you and see if there are inputs that anyone wishes to make, either by saying that is the wrong issue or that is not what I said or we ought to add something to it, or we have heard enough, we don't need to pursue this any further, in which case there will be a little applause in the back which we can ignore.

So unless anybody has anything they would like to add to what I have said, I would like to spend whatever time it takes. I think we have enough time now to go through these items here. Like I say, they reflect input by NRO which Eileen is responsible for, as well as initially Mike Lee and subsequently Weidong. I have had a little bit of input to them as minutes for the meetings have been prepared.

Okay. With that, let's see how it works. Item 1: The action item is to get more discussion of

how generic issues are addressed since Rev 15. An example given there is GSI-191.

Again, let me say one more time, the wording here may be way off base, given that this goes way back to July, and maybe we are smarter now or we have a better idea of what it is that is the question we are trying to get answered. So we want to try and fix that now, if that is appropriate.

So Item 1: Anybody have any comment they want to make? Do they think we have learned what we need to about how generic issues are being addressed? We heard about 191 here today. We were told that it will be resolved for AP1000 as part of this amendment process. Anybody want to hear anymore about how generic issues have been addressed since Rev 15?

Eileen, is there any reason to keep this item on the list?

MS. McKENNA: I don't think so. I think we've -- My view is we were kind of touching on this by examples, by GSI-191. That is a case. Obviously, the gas intrusion, the Generic Letter; that is a case.

This really was dealing with those more recent kinds of events, because up to time of certification, of course, all generic issues and

Generic Letters and bulletins have been discussed. So this was really focusing on anything new that really needed to be handled. I think we are handling them.

CHAIRMAN RAY: Does anybody object to taking it off the list? Okay, done.

Item 2: We just this afternoon had a discussion about non-condensible gases. Are we done, do you think?

MEMBER ABDEL-KHALIK: No. I think the discussion that was presented today was very good. It is a work in progress, but I think we need to hear the full story.

CHAIRMAN RAY: All right. Do you want to change this in any way or do you think the wording here is fine?

MEMBER ABDEL-KHALIK: This is fine.

CHAIRMAN RAY: All right.

MR. SISK: Just a clarification. What I am hearing is that we have given you the in-process. You would like for us to come back at the end and give you kind of a report on what we finalized. Is that what I am hearing?

MEMBER ABDEL-KHALIK: I think that would be a reasonable interpretation. I think the issue that came up was, well, have you done the heat-up

analysis, for example. Assuming that the entire line is voided, what the consequences of that would be.

If it turns out that the consequences are tolerable, then maybe the issue would go away, but nothing that has been presented so far would tell me that the issue has gone away. In fact, the material reinforces the fact that this is an important issue that needs to be resolved.

MR. SISK: No problem. Just wanted to be clear. Thank you.

CHAIRMAN RAY: All right. Then we will reword the --

CONSULTANT WALLIS: There is really no way to fix it, too. I mean, there is really no way you can do something with that piping arrangement.

MEMBER ARMIJO: Can't engineer that problem away. Yes.

CHAIRMAN RAY: We will change the action which reflects what occurred today to reflect what Said just said in some way, something about at the conclusion of the ongoing analysis, we would like a report, and so on.

Item 3: RTD relocation. Is there any impact on the dead band for rod control? Are there any upper half -- or are they at the upper half or top

of the hot leg?

I recall this discussion. My name is on here. So that reflects that I was --

MS. McKENNA: Mr. Chairman, I will just comment. What we try to do is go back in some cases and look at the transcript and our notes to see which members we thought raised these issues. Again, sometimes somebody raised it once, and then later in wrap-up somebody else raised a similar issue. So I won't swear that we have 100 percent, but we did our best.

We focused on the ones where we thought there was still something open. You will see, in some cases we didn't fill it in yet, but that was the intent, was to try to reflect which member we thought had --

CHAIRMAN RAY: We don't take it as an accusation. Anyway, the idea is that it was closed at the October meeting. That is my recollection also, but if there is anything we further we want to pursue -- I think you had the main lead on questioning this.

All right, let's consider it to be closed and take it off.

Flywheel design, something we just heard more about: Sam, do you want to hear more yet?

MEMBER ARMIJO: Well, this is just free advice to Westinghouse. I just think that material for that retainer ring hasn't been adequately tested. At least, I haven't seen the data, and it could cause you a lot of grief.

CHAIRMAN RAY: Well, you did ask for some information about that testing, didn't you?

MEMBER ARMIJO: Yes. Maybe Curtiss-Wright, and they have got test data, but I kind of suspect they don't. But if they have it, it would be great to see it.

The other thing is all the possible things that could -- A pump failure like that could cause all sorts of other problems. I just don't know if they have really been thought through.

CHAIRMAN RAY: It was my understanding from what Dale said that pump seizure, basically -- use Ed's term -- is analyzed, an analyzed condition.

MR. CUMMINS: Chapter 15, condition 4.

MEMBER ARMIJO: That may be the case and, if that is the case, then I don't have a problem with that.

MEMBER BONACA: Some fuel in DMB is allowed.

CHAIRMAN RAY: Sir?

MEMBER BONACA: And some fuel in DMB is allowed.

CHAIRMAN RAY: All right. I am only concerned that there is some gap in the analysis, but if it is an analyzed event --

MEMBER ARMIJO: If the staff is in agreement with that, I don't have a problem.

CHAIRMAN RAY: Anybody want to keep this on the list for any reason?

CONSULTANT KRESS: I would still like to see how it is treated in the PRA, the frequency. I am not sure we have a good value for the frequency of seizure, the failure in this category.

CHAIRMAN RAY: Okay. Anybody -- Eileen or Westinghouse either -- have any comment on what Tom said?

MR. SISK: Just a clarification. What you are asking for is for the flywheel failure in PRA or are you looking for locked rotor in PRA?

CONSULTANT KRESS: Locked rotor.

CHAIRMAN RAY: All right. Well, let's narrow it down then just to that as an issue. Either make a new action item out of it or revise it accordingly, because I think we got a pretty thorough presentation today of things that were previously

outstanding, including my concern about the external heat exchanger.

MEMBER ARMIJO: Harold, I would still like to get whatever data that Westinghouse has on the corrosion testing of that retainer ring material. What do they know about it?

CHAIRMAN RAY: Yes, I meant to mention that, if I didn't, as still a request.

The pressurizer, Item 5, we believe, has been covered. That was a change in the shape. We had a presentation that had to do with the chugging behavior and how there was minimal impact on that. So we consider that to be gone unless somebody wants something more.

6, Flow Skirt: Talked about that today -- excuse me, I mean yesterday at this meeting. There are some specific questions here about that subject. Said, would you disposition that?

MEMBER ABDEL-KHALIK: I still have questions about this. I guess the questions were sort of posed regarding the dynamic similarity of the 1/7th scale experiments. You have the geometric similarity but not dynamic similarity, and I didn't see any information that would reassure me that the process by which you do the experiment at a Reynolds number that

is 35 times lower than normal, you compare the experiments against the numerical model, and even if you get perfect agreement, that you have any confidence in using that numerical model then to predict what happens at the actual Reynolds number, which is 35 times higher.

The question was asked as to whether or not the possibility of looking at running the experiments with a different fluid, high pressure air instead of water, to try to push the Reynolds number a little closer to the actual value, and I think the gentleman from Westinghouse said he will look at that.

CHAIRMAN RAY: Is this a safety issue or -- My lay or view of this thing was that the flow skirt was mainly being driven by the fuel design requirements as opposed to a safety issue. So I am trying to separate those here, so we don't inflate them.

MEMBER ABDEL-KHALIK: I think, from my perspective, that this impacts the core and the flow distributions, and there are a lot of things that happen --

CONSULTANT KRESS: It affects the plant temperature in the hot channel.

MEMBER ABDEL-KHALIK: Right. -- that sort

of can follow out of that.

MS. RISK: I was going to say, there are clearly some -- what is the word I am looking for? -- potential impacts, but the purpose of this issue is really a fuel performance issue. There really isn't a direct safety concern. What is really driving this was industry efforts to drive rod threading to zero in the Zero By Ten program that MPO had initiated.

So I understand that there could be a connection that could be drawn, but they are really handled within the design -- the accidents in the design capabilities of the plant, and what we are talking about is an effort to move away from fuel leakers, not a safety concern.

MEMBER ABDEL-KHALIK: Nevertheless, this has a direct impact on how you prepare the input to your VIPERW code, and that has an impact on the core thermal hydraulic design, and we would just like to find out what the assumptions used in setting up the input for VIPER are, and the fact that they are actually supported by either the experimental data or numerical methods that are supported by experimental data.

CONSULTANT WALLIS: This failing issue is generic. I mean, LOFT and PUMA and APEX and

everything -- there is almost no experiment at full scale.

MEMBER ABDEL-KHALIK: I understand.

MR. CUMMINS: Ed Cummins. Just to be certain that we say what we think about the safety issue, we claim the cross-flow -- The safety issue happens higher in the core, and the cross-flow mitigates it. So in our opinion, it is not a safety issue.

That doesn't mean we can't bring it back to talk about it, but --

CHAIRMAN RAY: Well, I want to be as precise as we can, Ed, about what it is that we need more discussion of, because at the end of the day, I have to worry about how much time we are spending on various issues as well as what impact it is having on you and the staff.

So I guess, Said, could I ask if you could maybe write a simple statement of what you would like to see happen next here?

MEMBER ABDEL-KHALIK: I guess we never heard anything about lower plenum anomaly, and this derives from what the inlet core flow distribution is, what the geometry is in the lower plenum, what one expects as far as the conditions in the lower plenum.

If there are data or analyses that would explain what is going on, I think that would be very helpful.

MR. SISK: Let me rephrase what I heard in the three-way communication process then. Rather than focusing on flow skirt, in and of itself, would it be more beneficial then to come in with a brief discussion on the lower plenum anomaly?

MEMBER ABDEL-KHALIK: Lower plenum and core inlet flow distribution. Right.

CHAIRMAN RAY: All right. The flow skirt then simply becomes an entry point, I guess, for the discussion that you are still -- we want to have. It isn't a consequence of the flow skirt, is it?

MEMBER ARMIJO: No.

CHAIRMAN RAY: All right. Let's revise 6, and again I would like to keep it as focused as possible to the specific things that Said is asking for, and not just groping for further discussion.

Okay, Sam, on Item 7 are we satisfied? I think this was yours.

MEMBER ARMIJO: No, I didn't ask about exothermic, I know. I wouldn't ask that.

CHAIRMAN RAY: Well, I just read the first part, zinc injection, which you did have an interest

in zinc injection, as I recall.

MEMBER ARMIJO: That is in good shape. I don't have any problem.

CHAIRMAN RAY: All right, Tom.

CONSULTANT KRESS: That one was mine, and they discussed the potential for this and satisfied me to the point it is closed.

CHAIRMAN RAY: Okay.

CONSULTANT KRESS: There was also a question on whether or not it affects the departure from nuclear boiling as a coating, but I think they also addressed that one. I would say it is closed.

CHAIRMAN RAY: Okay, good. Item 8, PTLR process, need to clarify how this is captured in the tech specs, and other examples. This is indicated as having been closed at the October meeting. I don't recall who head that as an item of interest or inquiry, but if there is no exception, we will leave it closed as indicated.

Turbine overspeed protection: This I do own up for. We discussed it at the October meeting and, as it says here, open question on intercept valve test frequency and method of testing for overspeed.

Let me direct a question to Westinghouse. Do you have something in train to give us anymore

information on that or do we need to reframe the question or where do we stand on that?

MR. CUMMINS: Ed Cummins. We have answered a couple of questions to the staff related to overspeed and how we test it. We would be happy to have a short presentation on it.

CHAIRMAN RAY: But my recollection, Ed, was that there was a change or a reduction or an increase in the interval of the intercept valve testing on the grounds that the standard testing frequency was unnecessary. I will say it that way. And it got into a discussion that I didn't think was very satisfying at the time.

I would just like to take a look at that. I understand as a plant operator how you don't like to have to do this test. Done it a lot myself, and I just want to make sure we are not -- that we are giving appropriate attention to that, because I do think turbine missiles are a risk.

MEMBER BROWN: Don't -- When you are finished.

CHAIRMAN RAY: I am finished.

MEMBER BROWN: Okay. I wasn't here for the october meeting. I was in Tokyo. So I have no idea what went on then, but I did have an interest in

this one because of what I had initially read on the overspeed control, the digital -- the I&C.

I got the paper which described this. I am going to ask you all what happened. I got the paper. I read the paper, which said that they now have a totally independent, different type of overspeed trip.

They've got the normal speed control and trip, and then you've got a diverse set with another set of sensors and another set of electronics, including a different software. They are still digital, but it is a different set of software.

So I wanted to confirm that, in fact, those DCD changes -- and you proposed that you would change the DCD to do some things. I see that noted here.

CHAIRMAN RAY: Yes. Let's keep that on the list. Let's not try and solve it now.

MEMBER BROWN: Oh, no, that is fine. I don't want to solve it. I just wanted to make sure that was the case.

The other interest I had was the testing, and I didn't know whether you had --

MR. CUMMINS: Just one sentence. We have addressed this diversity, and it is in the DC. We

have not addressed the valve frequency. We have that yet to do.

CHAIRMAN RAY: I understand. I am going to keep the diversity on the list as well, because Charlie is the guy who we need to satisfy on this. I can't speak for him in that regard.

MEMBER STETKAR: As part of the testing frequency, the question I raised yesterday, I guess it was -- and again, I wasn't here in October either.

So I didn't have the benefit of those discussions, but it is linked to the testing frequency, because they use the turbine missile analysis to justify the testing frequency to verify the reliability of the main turbine stop valves and control valves and the intercept reheat stop valves.

I have some real questions about that basic turbine missile -- the overspeed failure analysis --let's call it that -- the frequency input to the overall turbine missile analysis.

CHAIRMAN RAY: Do you want to add to this?

MEMBER STETKAR: Well, yes. I mean, we can link it to this one in terms of Westinghouse preparing some material. The two specific concerns that I have: Number one is their use of the available operating experience data from -- I think it was nine

Japanese units -- to justify the frequency of both challenges to the turbine overspeed and the reliability of, in this particular case, the main turbine stop and control valves. So it is how they used the available operating experience to justify both the challenge frequency and the failure rate for the valves.

The second question was: The analysis is based completely on a design overspeed condition which they assume is going to challenge the rotor, the discs. They do not evaluate a -- did I say design overspeed? If I did, I misspoke. A destructive overspeed is what they quantify.

There are two other overspeed conditions, the design overspeed and intermediate overspeed, and they said we don't need to evaluate those, because the conditional probability of the discs coming apart is so low that it is insignificant.

Using their data, it would have to be less than 10^{-3} for a design overspeed. Otherwise, they would double the frequency that they calculate.

So I would like to see what those conditional probabilities are for each of the overspeed conditions. That is probably a simple answer, because I am sure they have it somewhere.

They just weren't reported in the turbine missile frequency analysis.

CHAIRMAN RAY: Item 12 looks like a better place.

MEMBER STETKAR: Well, it just has that one crossed off, and that is why I thought --

CHAIRMAN RAY: It was discussed at the October meeting, but -- Eileen and Weidong?

MS. McKENNA: I think it was crossed off because of the dual unit versus the single unit.

CHAIRMAN RAY: Okay. John has a different set of concerns here. You just heard them. If you need him to help you word the action item, why let's do that offline.

MS. McKENNA: And expand it to maybe two items or something.

CHAIRMAN RAY: Okay, however you want to handle it, but the issue is, I think, sufficiently different than 9, which is what Charlie and I were talking about, that it ought to be highlighted. Well, I just put it in place in 12 or make it a new item, whatever.

I think of it in the context of 12, because that is where --

MEMBER STETKAR: I brought it into the

turbine valve testing frequency, because they used that turbine missile frequency analysis, or the turbine trip failure analysis, if you want to call that, to justify the testing frequencies. That is how they backed out the testing frequencies to make sure that they still satisfied the 10^{-5} failure to trip.

CHAIRMAN RAY: Okay. Whichever seems appropriate, a new item or link it to 12, as you see fit, but John's question needs to be followed up on.

MEMBER BROWN: One other point that might help on the diversity issue. From the paper and the other stuff that I was able to find, it looked like the independence on the functions, the centers and everything looked fairly reasonable.

The thing I couldn't find was power supply independence between the two systems. I was hoping they were, but I did not see an explicit -- or I didn't find it, let's put it that way. So I would like that, if somebody can find that out.

CHAIRMAN RAY: If anybody thinks I am pushing along here, we've got 45 items to go through, and we are on Item 10. So I am trying to do what we can here without running us into the evening.

Item 10: Elbow taps for RCS flow measurements is Sanjoy's item. Eileen, can you tell

us anything about that?

MS. McKENNA: I am going to ask Westinghouse to. We don't have a whole lot of information in-house on this issue. So I think we were looking to get some background information.

CHAIRMAN RAY: So as far as you are concerned, that is still something to come? Westinghouse want to say anything, or not?

MR. SISK: We will treat it as open. We did have a brief discussion on that a little bit. I think it was either at the October or -- I think it was the October, but we could certainly bring that in, treat it as open, and close that out.

CHAIRMAN RAY: Okay. Like I say, I am trying to get these things treated properly and then closed, not coming back to them over and over again.

Okay, aircraft impact: I should ask the staff, that being Eileen, what is the outlook here? Is this going to come in the shield building, or what?

MS. McKENNA: There is, obviously, a relationship to that shield building, because the design of the shield building does provide a degree of resistance to the aircraft impact. So we need to --

CHAIRMAN RAY: I don't know what inspection results -- what are those words meant to

mean?

MS. McKENNA: Well, I think at the time that this item went on the list, the plan was to kind of approach aircraft impact primarily from inspection. I think that has shifted a little bit to be more of performing a review. So we maybe need to clean up wording here and just say the committee is interested in the results of the staff's evaluation of aircraft impact.

CHAIRMAN RAY: When would we get that normally?

MS. McKENNA: Well, I will tell you, since we need to get the shield building, and they are revising their assessment of the rule requirements and the guidance based on what they have to do to the building, and that is coming in March, I believe, the last we heard, and then the staff would be able to do its review.

So it is going to be a little while.

CHAIRMAN RAY: Say it again.

MR. SISK: It wasn't us.

MS. McKENNA: Wasn't me.

MR. SISK: But, I think, perhaps to add some clarity to that, we just finished our peer review for AIA on the new design, and the pathway that is

going forward right now, as Eileen was pointing out, we are going to providing a revised language for 19(f) and the write-up as a part of the new shield building. But the actual staff inspection is separate and outside of the licensing process, and is likely to take place this summer.

Sometime after, I think, the new design goes in, we would be glad to either discuss or work with the staff on whatever is needed in that area.

CHAIRMAN RAY: Okay. The word inspection makes sense now. It is broader than the shield building. You were talking about --

MS. McKENNA; Yes.

CHAIRMAN RAY: And you think, Rob, that there is a time sometime later this year when that will have been done and we could hear about it?

MR. CUMMINS: Done is --

CHAIRMAN RAY: We got the word done. We could hear about it?

MR. CUMMINS: We are done with the design today, and would be willing to make a presentation anytime. If you wanted the staff to do -- Their schedule for doing a review of it is -- They have concluded, I think, that they don't need to do a review even within the design cert scope. So it is

sort of slipping, and whether we want the staff to have reviewed it or not, I think we need to discuss with them.

MR. SISK: And, Eileen, maybe we should confirm. I think we actually had a discussion on the agenda with the ACRS for shield building later this year.

MS. McKENNA: Well, I think we were proposing -- we'll get to this next agenda topic -- that in March we would have an informational briefing from Westinghouse on where we are with the shield building, kind of come up to speed and you've got your consultant engaged. You have a ways to go, obviously, to catch up perhaps with the staff's interaction, and possibly that we could cover this topic at that same time. Something to talk about, think about.

CHAIRMAN RAY: Possibly. All right, yes. Think about it. In any event, I can't say we are done with it, and we need to have some plan for addressing it.

MEMBER ARMIJO: Do you just want to call it an aircraft impact assessment, period?

CHAIRMAN RAY: Perhaps. I think the word inspection got inserted in there, because at the time there was this expectation that there would be an

inspection that would be -- but it doesn't make a lot of sense to me.

Okay, Item 12 we have talked about. It will either pick up what John had discussed or it will remain closed, and a new item will be established, but in any event, just the issue of dual unit sites, I think, is adequately addressed already.

BLN hydrology issue and QA aspects: Obviously, this came up in the context of TVA and is site-specific. Do we need to carry this here now for any reason?

MS. McKENNA: We considered it closed, but if you want to take them off the list until --

CHAIRMAN RAY: Yes. I think, ultimately, we probably want to take things off the list so that we don't waste people's time with things that are closed, and maybe they decide they are not closed after all.

I guess that applies to 14 also.

Fifteen: 199, Eastern Tennessee seismic zone. Again, that is not relevant to what we are doing now, is it, or is it? In other words, should we be addressing this as part of our present activities or wait until we have a site-specific?

MR. RYAN: Do you want to take it off?

MEMBER STETKAR: I think we have to wait until you have site-specific for Vogtle.

CHAIRMAN RAY: Everybody agree with that? All right.

MS. McKENNA: What do you want me to do with this one?

CHAIRMAN RAY: Well, yes. I would say, Mike thinks we ought to take it off, but in any case, we shouldn't be burdening ourselves with it right now.

MR. RYAN: Do you want to -- I mean, inactive and just leave it there, if you want.

MEMBER STETKAR: We have to wait until we get the site-specific parts of the Vogtle COL presentation.

CHAIRMAN RAY: Same for 16 or not?

MEMBER STETKAR: Yes. That would be also a site-specific flooding susceptibility.

CHAIRMAN RAY: Okay, 17 is one Said and I chatted about a bit ago. Anymore you want to say about it?

MEMBER ABDEL-KHALIK: You know, the only thing that remains in my mind is any ITAACs related to the piping layout to address the non-condensible gas issue, but I guess that just can be combined with your resolution of the non-condensible gas.

CHAIRMAN RAY: You are on 17, on testing?

MEMBER ABDEL-KHALIK: Right.

MS. McKENNA: We can write that into the statement of the non-condensible issue.

MEMBER ABDEL-KHALIK: Right.

CHAIRMAN RAY: So you are satisfied otherwise, and so we can consider this --

MEMBER ABDEL-KHALIK: That was the source of that issue.

CHAIRMAN RAY: Okay. Take it off then, and consider it to be a part of what we discussed earlier.

Eighteen is closed. I think we are managing the workload now satisfactorily.

Radiation significance definition: Let's see, closed with respect to AP1000. Anybody have any specific recollection if there is anymore to be done there? I don't.

Okay, 20. So that is gone. Nineteen is gone. Twenty, digital I&C failure rates were addressed in the PRA and whether there were any improvements made in the design, insights from PRA. So, John, you and Charlie and Dennis are going to talk about that. I understand, but you are the members. Tom, what do you want?

CONSULTANT KRESS: They talked about this. They didn't -- The failure rates were based on knowledge about the hardware, and it is hard to get a computer failure -- or a software failure rate. I think that is the best you can do.

CHAIRMAN RAY: Okay.

MEMBER STETKAR: For AP1000, I would agree. It is a broader generic issue in the area of modeling digital I&C systems.

CHAIRMAN RAY: Take it off.

Twenty-one, I don't think we need to keep it around. It is more in the way of an admonition.

MEMBER ABDEL-KHALIK: It still remains.

CHAIRMAN RAY: Well, sure. I am trying to narrow this down to action items so we know how many of them we've got to schedule into the future. Same for 22.

MEMBER BROWN: What did you say on 21?

CHAIRMAN RAY: I thought of it as an admonition rather than as an action item.

MEMBER BLEY: We already have action items related to specifics.

CHAIRMAN RAY: And so I put 22 in the same category. This says to be discussed at the February meeting. I think we have evolved from this point to

the process that we have here now. It got a little mixed up yesterday and today because of the fact that Sanjoy was only here yesterday and needed to address items that he has an interest in then.

Twenty-three --

MEMBER BROWN: What are we dong with 21 and 22? Are they going to go off?

CHAIRMAN RAY: Take them off, yes, because again we are trying to schedule stuff that needs to be done.

MEMBER BROWN: All right.

CHAIRMAN RAY: Twenty-two is said to be closed. Again, it is more in the way of a generic process related discussion we were having at the time. So it got picked up.

Twenty-four -- Anything you want to say more, Eileen, that needs to be said?

MS. McKENNA; I think this is just something we put down, and we did talk about this in the November full Committee meeting of how we are transitioning, and I think that, obviously, we are hoping to finish that transition very shortly. So that we hope that issue will be behind us.

CHAIRMAN RAY: I would call it muddling through.

MEMBER BROWN: I guess I have one question on how -- We have had a number of subcommittee meetings, and I guess I am looking for how do you -- this process issue. How do we close out the entire thing with the full Committee after -- I mean, you can never address this in the one and a half hour allocation that we normally have. Is it a two-day, full -- Has that been decided?

CHAIRMAN RAY: Let me tell you what I think, and then if the boss here or somebody else wants to change it, he can. I think right now we would look at discussing whether to write a letter on the DCD amendment first, and we would not do that until after we have completed the initial review, which is still a meeting or so away.

Whether we write a letter on the standard content portion of the combined license, I am doubtful. I think we wait until we see the site-specific and write a letter then, unless there is something that really troubles us.

So right now I think our main focus is on is there anything we want to say, and are we ready to say it, on the DCDA, the Rev 17 of the design change.

MEMBER BROWN: Now how do you get that all 19 chapters presented to the full Committee? We have

had pretty good participation recently.

CHAIRMAN RAY: Well, that is something we will have to work on.

MEMBER BROWN: Okay. We haven't really walked through that? That is an answer.

CHAIRMAN RAY: Yes. I don't want to try and engineer that here.

MEMBER BROWN: That just occurred to me as we were --

CHAIRMAN RAY: But on the subject of 24, is there anybody who feels like we need to carry an action item on this transition process? Like I say, for a minute I couldn't explain it. We are just going to muddle through, and that is about what it boils down to.

At some point we will say we have a concern or we've got to write a letter, because even if we don't have concerns, we are done. That time hasn't come yet.

Okay, 25, human factors engineering: Anybody want to comment on that? Dennis, you often have --

MEMBER BLEY: No. I think we see where it is headed, and the things we are most interested in aren't going to happen until later. So, no

CHAIRMAN RAY: You want to drop it?

MEMBER BLEY: I am willing to drop it, yes.

CHAIRMAN RAY: Okay, you are the guy.

MEMBER BLEY: We will see it some other time.

CHAIRMAN RAY: Twenty-six, waste management: Dr. Ryan?

MEMBER RYAN: Sir.

CHAIRMAN RAY: What would you like to do with 26?

MEMBER RYAN: I thought that was in the COL.

CHAIRMAN RAY: Keep it there?

MEMBER RYAN: Yes, I think so.

CHAIRMAN RAY: All right.

MEMBER RYAN: It is not a big issue.

CHAIRMAN RAY: All right. Twenty-seven, PRA audit results: What do you PRA guys want to do? Are we done?

MEMBER BLEY: Well, they sent us the audit results. I have looked through them. Same issues we have had elsewhere. I don't want to keep that one, but I would like a briefing, because I don't find it anywhere, for the PRRA for the COL.

Everything in there says nothing matters, and we haven't changed the base PRA, and we've got a lot of changes to the plant, and I haven't seen any basis for saying that in aggregate those make no difference except a sentence that essentially says that in Chapter 19 for the COL.

MEMBER ARMIJO: Wasn't that addressed in the audit?

MEMBER BLEY: The audit was of the AP1000 PRA.

MEMBER ARMIJO: Oh, okay.

MS. McKENNA: I might also note that I have given to Weidong an updated list of the technical reports, and there was a revision to one of those. It was the PRA requantification. So you may want to take a look at that document. I know there was interest in that. I think it was TR-102, as I recall. It came in, in December. So, yes, you may want to take a look.

MEMBER BLEY: It is a recalc.

MS. McKENNA: Yes.

CHAIRMAN RAY: Okay, Weidong, keep 27. Say it is under review.

MR. WANG: Okay.

CHAIRMAN RAY: Twenty-eight: Pipe break

hazard report. We had discussion about that this time. There has been -- It was quite a bit of back and forth. Westinghouse, you want to say anything about this action, which is provide report when completed? How would you describe it?

MR. CUMMINS: It is being deferred until after design cert.

CHAIRMAN RAY: So I guess, since Sanjoy is not here -- I am trying to think and talk at the same time. I am trying to figure out if there is any action item that is associated with the COL, but I don't think so. So as far as I am concerned, there is no reason to continue to carry this as an action item.

Since you are talking about striping, what do you want to do with 29?

MEMBER ARMIJO: I am not Mr. Banerjee. I don't remember what his issue was.

CONSULTANT KRESS: They were going through instrument piping to see what sort of thermal stresses you would get from the striping, and they had a criteria for going around looking where that would be. I think Banerjee wanted more information on just what those criteria were. I don't know if he ever got it or not.

MR. SISK: We haven't talked about this,

but we would be glad to present something in the March time frame, as noted on the paper, to follow up on it.

CHAIRMAN RAY: Thank you.

MEMBER ARMIJO: Part of a fatigue issue.

MEMBER SHACK: This is the whole fatigue design thing. The same with wet stems. I am not sure why that is in there.

CHAIRMAN RAY: You want to take it out?

MEMBER SHACK: To my mind, the analysis is the least of the concerns. I mean, it is identifying exactly what you want to analyze in the first place. I am fairly confident they can analyze it. It is finding the driving forces that is the tricky part of the fatigue.

CHAIRMAN RAY: So should we take out 30 or you want to change it?

MEMBER SHACK: Take out 30. You know, 29, you could make it broader. It is striping. It is thermal fatigue. It is all those issues for everything except the sort of standard design cert --

MEMBER ARMIJO: Screening criteria for thermal fatigue.

MEMBER SHACK: It is the hard part of the fatigue that is of interest.

CHAIRMAN RAY: Okay, take out 30. Leave

31. Thirty-two: There is still discussion among members of the subcommittee, I think.

MR. SISK: I think I misunderstood what you said. We are going to leave 29 and take 30 out?

CHAIRMAN RAY: Yes.

MR. SISK: Thank you.

CHAIRMAN RAY: And we are going to leave 31 as is.

Thirty-two, I was starting to say, I believe that that is under discussion now.

MEMBER BROWN: Right now when we left the meeting on the 19th, I had not had an opportunity to see the WCAPS that were relative to the I&C architecture, and we had an abbreviated presentation which illuminated some stuff, which helped a lot when I read the WCAP

I found at least one item in there relative to the SER that I need to consult with John and Dennis and George, which we are going to do, and determine whether there is any other -- I got to see if they --

MEMBER STETKAR: My sense is, for this meeting, we should leave it on the list.

MEMBER BROWN: We ought to leave it on the list.

CHAIRMAN RAY: That is all I wanted to do, is just leave it on the list.

MEMBER BROWN: It should not be ghosted or grayed or whatever.

MS. McKENNA: I think it was, because at the time this was coming at the full committee where I know you presented your kind of four criteria, if you will, on what you were looking for in terms of function.

MEMBER BROWN: This was an earlier --

MS. McKENNA: Yes, before the subcommittee meeting, and so that is why I grayed it out, but obviously, if we need to add a different item or a more specific item, we would be happy to do that.

MEMBER BROWN: Well, there is at least a half a dozen to a dozen open items for you all, but depending on how they are resolved --

CHAIRMAN RAY: Let's not -- Let's just leave it as is, but keep it. Keep it open.

MS. McKENNA: I will un-gray it.

CHAIRMAN RAY: Thank you. You can say ongoing review by ACRS or something. We may or may not ask for something more from staff or Westinghouse.

Okay, 33: Site?

MEMBER ABDEL-KHALIK: I think we heard

enough about ASTRUM. I am not sure if anybody else wants to hear about the seismic analysis.

CONSULTANT WALLIS: Well, Sanjoy was still talking about it when he left.

MEMBER STETKAR: Talking about what?

CONSULTANT WALLIS: He was wondering how they managed to get such a huge change, such a big margin. there was some concern about that. I think you better ask Sanjoy whether he --

MR. WANG: We will have a newer action item for this meeting. I mean for February.

CHAIRMAN RAY: yes, I think that is right. S a result of the discussion, Weidong will have an action item that will try and capture the point that Sanjoy has.

MEMBER ARMIJO: That was an ASTRUM-specific thing. This originally was we would like to see the methods changes that have gone on instead of a general -- ASTRUM was one piece of that.

MS. McKENNA: And we did kind of look through and see what -- you know, within the design changes and ASTRUM and some of the seismic areas. There were changes from -- I will probably get it wrong, whether it was time history, response after or whatever. You will hear about those when we come back

on those Chapter 3 areas, but we didn't see a whole lot of other methodology changes that were going on.

MEMBER ARMIJO: Right. So that is covered except or the understanding of how ASTRUM is -- how it really works.

CHAIRMAN RAY: Yes. Well, or maybe another way to say this: How did its use result in such a big change, increase in margin? that is not meant to reflect some suspicion. It is only a matter of professional interest, so we understand, if we are cutting off a tail or if we are doing something else, what is going on. That is all.

I know Sanjoy also had concerns that were discussed, over my head, about whether it was suitable for application to AP1000 for a bunch of reasons, but in any event, it will be kept open, as Weidong said.

Thirty-four: Dennis?

MEMBER BLEY: I would still like to know this.

MEMBER BROWN: I just want to interject one thing on the back, and I may have said it before. When I read a number of the DACs acceptance criteria for some fairly critical items was that a report will be issued, and everybody is happy.

So there was absolutely no idea what the

criteria would be relative to the satisfaction of those. So the whole issue of how do you deal with DAC in the digital I&C world is still -- It is still a generic --

CHAIRMAN RAY: This is human factors-specific here.

MEMBER BROWN: Oh, okay.

CHAIRMAN RAY: Now wait a minute, Charlie. I am saying you got a broader issue, which I think is fair.

MEMBER BROWN: Well, I think we have discussed that before in terms of how that was -- I know you have made the comment, and I know John has as well.

MEMBER BLEY: I think what I meant by this, and it would apply to Charlie's, at least for some of the DAC that are being eliminated by Rev 17, it would be really nice to see something from either Westinghouse or staff, or both, explaining why that DAC is no longer there, how it was fulfilled, and it would deal with what Charlie is saying.

It is, yeah, okay, so that report was issued; what did you do to be convinced that everything is the way it ought to be? So that level of -- and not everyone of them, maybe a few, so we can

get a flavor that the review is digging in and that it is not just, as Charlie said, a report has been submitted.

CHAIRMAN RAY: All right. Dennis, could you reword the comments disposition entry here? This just simply says final SER should document DAC closure. I don't think that is a correct statement of what you would like to see happen. This is just on HFE, right?

MEMBER BLEY: Yes, that was the first thing I said.

CHAIRMAN RAY: Could you just give Weidong something that better states what it is you think we need to do and see here?

MEMBER BLEY: Sure.

CHAIRMAN RAY: Then to Charlie's point about DAC generally, I think it is a serious question. I just hate to add it to the action list here for AP1000 unless we know exactly what the question is we are trying to get an answer to, if it is a generic issue. Bill, help me on this. Isn't this still a generic issue between us and the staff?

MEMBER SHACK: Yes. I had a question for Eileen on that, because this HFE is the first one that we have actually seen where there has been a closure

of a DAC. I guess my question was: Was it fulfilled by essentially going through the DAC and Rev 15 and assessing that the product they provided addressed those DAC or was it really a different process where you just sort of started over from scratch?

MS. McKENNA: No, I am not the Chapter 18 reviewer, but my sense is that it was kind of taking -- since they were all the implementation plan documents that had been developed that were what formed the basis of the DAC, and that the staff then goes through and says, okay, did these things that they were supposed to develop this and implement that -- did that occur.

So I think the answer is yes, but I think I would --

MEMBER BLEY: I think not, because we had a fellow here talking about that some months ago, and I think we asked him that, and he said, no, they sat down and reviewed it and decided there were no DAC needed to be in Rev 17, that they didn't actually play it against the DAC from 15. I am pretty sure that is in the transcript.

MR. CUMMINS: I think you can get both answers, but what happened in reality is the staff inspected us based on the DAC that was in Rev 15, and

we negotiated a series of deliverables that met the requirement of the DAC as written, and we provided those deliverables, and they reviewed, and they are coming to -- They haven't yet accepted them, but they are coming to accept them, and then they will be closed.

So in the case of HFE, all of the DAC will be closed. So there will only be a V&V ITAAC left. In the case of I&C, two of the DAC will be closed.

So there will still be a third open DAC. And the two that we are starting to write them up as part of RAIs, and they are reference documents being put into Chapter 7, and it says, you know, we provided these 15 reference documents for the staff to review, and the staff found them acceptable, or whatever it says.

It is definitely -- They read what the DAC said we were supposed to do, and then we said we think the answer to this is this, and back and forth a few times, joint agreement, then review that. So it was a very -- Yes?

MEMBER BROWN: If you look at the DCD -- and I am agreeing with you, sort of, in that it does reference the WCAPS for particularly 16.675, I think the number is, which works. Okay? If you go through

that it is a much better picture.

There are some points where it doesn't necessarily work in all circumstances, I don't think, and I have --

CHAIRMAN RAY: I've got a feeling we are working an issue here when I'm --

MEMBER BROWN: No, no, let me finish. I'm slow, okay? My brain is too old.

They talk about DAC-1, 2 and 3, and you said two of them were closed out, and there is still one open, and the staff echoed that. But when you look at -- and I've forgotten what the categorization of DAC-1, 2 and 3 were. It was the third one that wasn't finished.

I guess I still don't understand totally what resolved 1 and 2 and 3, and how 3 is going to -- That is all I am looking for, is how did we get that result, so we can look at it, and then either agree or disagree.

MS. McKENNA: That is probably a similar action, if you will, than what we have for human factors in terms of being able to document in our safety evaluation what was closed and why it was closed.

MEMBER BROWN: I don't want to try to have

to go grovel through 300 pages of stuff to try to figure out where the pieces of the puzzle fit together. I will never get there.

MEMBER SHACK: Why don't you make sure that this action item is clear enough as an action with the action we expected.

CHAIRMAN RAY: That was fine. I understand.

MR. CUMMINS: For I&C DAC 1 and 2, for each of those there is a list of, I'll say, ten-ish documents that Westinghouse produced for each of them. Those were reviewed by the staff, and they are assessing them still. And for DAC 3, I&C DAC, Westinghouse has prepared a proposal for what list of 15 documents we should produce in the future to close that, and that is starting to be discussed with the staff, and how we document that. We are thinking we might document that in 14.3, make that list in there.

CHAIRMAN RAY: All right, enough on this. Let's have two action items, one on human factors, one on I&C. You guys write up what the heck it should say, but I think it is clear enough that we want --

MEMBER BROWN: Staff needs to tell us.

CHAIRMAN RAY: All right. Where in the heck am I? I've gotten lost here in DAC. Thirty-

five. Okay, now we've got a series of GSI 191 things. Hopefully, we can simply say, well, we are going to hear about that in due course at the right time.

MS. McKENNA: In fact, that was a recommendation from Weidong, that we just put those altogether as staff needs to come and talk to you about GSI 191 and talk about a lot of things.

CHAIRMAN RAY: Okay, but in order to make that discussion, when it occurs, as productive as possible, I don't think we want to lose sight of the points that were captured here from the earlier meeting. So when you put them together, Sam is going to say --

MEMBER ARMIJO: Let me say what my concern was, and I think partly it was part of Sanjoy's, is that it was the chemical -- the prototypicality of the chemical environments used in the fuel assembly tests.

They were basically physical blockage tests with no real -- and if you read the transcripts, I kept going back to what is the temperature dependence; is the chemistry taken into account, the boric acid, the aluminum and all the other stuff that could be in there.

I think Sanjoy has added in aluminum. I started out with boric acid, but these chemical

prototypicality of the environment, including temperature, for those tests; and has it been done or not?

CHAIRMAN RAY: Go ahead, I'm sorry.

MEMBER ARMIJO: And that's it. So that is kind of a subset of the statistical analysis.

CHAIRMAN RAY: I just don't want to compress all of this down and then have to reinvent these issues later. So I don't mind combining them, Eileen, into a single thing having to do with GSI-191. I just don't want to lose what Sam just said. In my case, it was --

MEMBER ARMIJO: I can write something.

MS. McKENNA; Yes. It sounds like we didn't quite -- These are really cryptic shorthand.

CHAIRMAN RAY: They are very cryptic. That is right. In my case, you know what concrete scouring is in terms of a concern, which was we don't assume that there is a lot of scoured concrete debris created by loss of coolant accident, and I was asking, well, why.

Graham, on 39, had a --

CONSULTANT WALLIS: That is GSI-191.

CHAIRMAN RAY: Right, exactly.

HDPE criteria for loads and supports --

what the heck?

MEMBER SHACK: Is there high density polyethylene piping somewhere?

MS. McKENNA: Yes. May have gotten the wrong member there.

MEMBER SHACK: Where are we using high density polyethylene piping?

CHAIRMAN RAY: Well, it is buried piping, and the question, I guess, had to do -- but I can't dredge it up out of my memory now -- had to do with --

MS. McKENNA: Well, there were a number of questions about the joints and how --

CHAIRMAN RAY: That's right, yes.

MS. McKENNA: -- the thing was supported when it is buried, and I guess there is something, a code case maybe, coming on, and we had some --

CHAIRMAN RAY: Okay, let's not try and solve it here. Let's just say I don't believe we have a basis for closing it. It is coming back to me vaguely now.

MEMBER RYAN: There is a lot of current experience with buried piping.

CHAIRMAN RAY: That's right, bad experience.

MEMBER ARMIJO: This is probably an

improvement. I would like to know more about it.

CHAIRMAN RAY: So we will keep that.

RCBT test frequency -- Reactor trip circuit breaker test frequency is what that must mean. Anybody have any basis for year OI? Is that one, John, that you were asking about? Sounds like a question you would ask.

MEMBER STETKAR: Which one?

CHAIRMAN RAY: Forty-one.

MEMBER STETKAR: No.

MR. CUMMINS: We have responded to an RAI from the staff that says we will do it. I don't remember, but it less than yearly, and I think it is one division per month or -- Anyway, we have responded back with a position, and I think the staff and we need to get on the same page there.

CHAIRMAN RAY: Okay.

MEMBER RYAN; Harold, if you want to shorten your list by one, I will take 40 and write up something for Weidong, if you want.

CHAIRMAN RAY: All right. Cyber security: This says there is a topical report provided. Is that a basic of closing this item or is it under review or who is interested?

MEMBER BROWN: I don't want that one right

now, because I didn't have that until somehow I think somebody turned it over to me, but I am not quite sure of the status, whether I own that. Do I own that?

CHAIRMAN RAY: Eileen, I am going to look to you to decide.

MEMBER BROWN: I told George I wasn't going to do it. He is the one that's been doing it. So you ought to talk to him.

CHAIRMAN RAY: All right, you and George, would you? You sat right next to him.

MEMBER BROWN: Well, I don't know. they have rearranged me now.

CHAIRMAN RAY: We will leave it on the list.

MEMBER ARMIJO: You better talk fast.

CHAIRMAN RAY: The next, 43, is yours high speed links.

MEMBER BROWN: The high speed links are discussed in topical report. There is an outstanding SER open item that the staff has. That will be an interesting one. That is the one I commented to you in my notes to you, that that would be an interesting resolution, because it was -- the platform was approved with high speed links.

CHAIRMAN RAY: So it is under review?

MEMBER BROWN: Yes, but the staff is taking issue. It is going to be interesting.

CHAIRMAN RAY: Forty-four is closed today.

MEMBER BROWN: I am not sure we would all agree with it.

CHAIRMAN RAY: Forty-five -- I am not sure what --

MS. McKENNA: This is the fire induced circuit -- We kind of touched on it a little bit, I know, somewhat in the Chapter 9 discussions about separation and whether --

CHAIRMAN RAY: Where do you guys stand on this, Eileen? Can you tell me right off the top of your head?

MS. McKENNA: Staff had concluded that the analysis that had been done was acceptable in terms of essentially assuming that, because of the separation of the trains, that all the equipment in a particular fire area is just lost, and is not clearly concerned about the adverse interaction kind of things, which was what, I think, drove a lot of the issue in the first place.

I think this was Maynard's question from the last meeting.

CHAIRMAN RAY: Does this have anything to

do with a large fire event?

MS. McKENNA: No. Strictly the hot short kind of actuation.

CHAIRMAN RAY: Okay. Well, we are going to have to drop it, since I can't come up with anything.

MEMBER STETKAR: The real key is, as long as they are following the guidance in 1.189 and they comply with it, that guidance addresses this issue.

MR. CUMMINS: I think the staff looked at the report, and I think that the staff was basically okay with the report, but I don't think there was any issue between us and the staff.

MEMBER STETKAR: I think it was more of a concern if you go to the risk informed approach as far as scope and numbers and that sort of stuff.

MR. WANG: That item was closed down?

CHAIRMAN RAY: Yes. That last one, yes. I don't want to keep everybody here to try and come up with a list from this meeting. I need -- We have to look at the transcript and so on and so forth. It is just too difficult to do it sitting here now. But there will be a few items presumably that everybody has fresh in their minds about now that will be added to the list.

We have deleted more items, I am sure, than we have added, but at the end of the day we will have to look at the list and decide, okay, do we want to request additional presentations on any of these topics, and we will pass that word to the staff and ultimately to Westinghouse, if you are involved.

the last item for us, I think, today, to discuss are upcoming interactions as they stand presently. So, Eileen, did you want to make this presentation?

MS. McKENNA: I think Stephanie was going to cover that topic.

CHAIRMAN RAY: All right.

MS. COFFIN: We have a short presentation.

CHAIRMAN RAY: All right, Stephanie. While she is getting set, is she going to talk about the February meeting?

MS. McKENNA: The next meeting, yes.

CHAIRMAN RAY: Then there is the March meeting that you talk about.

MS. McKENNA: That is the next meeting.

CHAIRMAN RAY: Excuse me, I'm sorry. There is a February meeting later this month, but it is not on AP1000. That is what confused me. I apologize. The March meeting is the next meeting of

this subcommittee. That is correct. It has been a long day.

MS. COFFIN: So we are about to enter into what we call our Phase 5 ACRS interactions on the design cert amendment. Phase II and III are nearly complete with the issue of 18 and 19 SER with open item chapters issued and presented to the committee, and Chapters 3.7 and 3.6 are scheduled. They are under evaluation.

So as we are moving into preparing our advanced Final Safety Evaluation Report, we do plan to issue them on a chapter by chapter basis.

CHAIRMAN RAY: Excuse me, Stephanie. I am asking myself sa I am following you here, are we talking about standard content only or --

MS. COFFIN: This is the design cert. I am on the design cert.

CHAIRMAN RAY: Design cert. Of course, you are. I am sorry. Because you are sitting there, I keep thinking.

MS. COFFIN: We tag team. All the open items will be resolved before we issue the chapter to the ACRS and to the applicant, but there will very likely be confirmatory items remaining where they need to -- We will see a DCD mark-up, but they need to

actually provide the proper revision appropriate and close it out. So you will see some confirmatory items in those chapters.

Also, because of timing and other issues, there are going to be some review areas in Phase V that you have not previously seen presented for this design cert; for example, aircraft impact analysis and security reviews. We do expect multiple meetings with you throughout the calendar year.

This is essentially the same slide, but it is for the reference COL. So you are going to be -- We are going to be issuing the advance final SER , again on a chapter by chapter basis, for Vogtle. This is our reference COL now, and that is the first one you are going to see.

Same story, all open items will be resolved prior to chapter issuance. Some confirmatory items may remain, and again there will be some new review areas that you haven't seen before, loss of large areas due to fires, explosions, fitness for duty.

The presentation format will be similar to how we have been conducting them since last July. We will be presenting the chapters at the same meeting, but we will have separate presentations for the design

cert and for the reference COL presentations.

The applicants will present. The staff will present. The focus of our presentations will be on the key review areas and, of course, how we close open items, and we will issue them at least 30 days prior to the meeting.

IN terms of subsequent COLs, we would like to offer an information briefing on specific topics of interest related to Summer and Levy. The topics will be coming from Chapter 2, 8 and 13 and other site-specific topics that may be of interest to the ACRS.

So we are welcoming any particular areas that you are interested in, and we are targeting April for that informational briefing.

CHAIRMAN RAY: Well, April -- now that is -- I am trying to remember what you said previously. That means you are going to begin introducing the S-COLAs before we are entirely done with the R-COLA review. Is that correct?

MS. COFFIN: We are offering that as a suggestion to get early engagement on some maybe more complicated site-specific issues.

CHAIRMAN RAY: Well, as long as we prioritize what we are doing, because I think that the first aim has to be to try and get the highest

priority done first and not have it be drug our because we are starting to do other things as well.

MS. COFFIN: I understand. The reason why we offer this is that the subsequent COLs, we don't issue an SER with open items. So we go directly to the advanced final SER with no open items. So we wold like to -- So there is a risk of not engaging you early enough for the subsequent COLs, because of that revised process for the subsequent COLs.

CHAIRMAN RAY: Well, I understand. The other risk, though, is that we delay getting the DCDA and this R-COLA done --

MS. COFFIN: Oh, we would never let that happen. I understand. So we will just keep dialoguing through Weidong and work that out, but as of today we are targeting April to do this kind of briefing. But if it turns out it is not in the best interest, then we can change.

This is the last slide, upcoming topics. In March there is going to be a presentation by Westinghouse on the shield building, and then in April again the information briefing for Summer and Levy, and we are targeting to present the Advanced final SER on the four chapters that I have listed there for the design cert amendment and for Vogtle, our reference

COL.

CHAIRMAN RAY: Well, okay. As you heard me say to Charlie, I think, we are going to have to decide if at the end of this -- the end of the March meeting, whether there is anything we want to say to you at that time about the DCD. Of course, that will be a full Committee decision based on whatever the subcommittee decides to recommend.

So I have no idea whether that will result in a letter then or not.

MR. CUMMINS: So a comment: The airplane crash fits with the shield building. It depends on how you want the staff. The staff won't comment on the airplane crash yet, but if you are in the same mode in the airplane crash as in the shield building, it is a logical thing to do together, I guess. The thing that resists the airplane crash is the shield building.

MEMBER SHACK: The staff isn't going to talk about the shield building either in March.

MS. COFFIN: No, we will not.

CHAIRMAN RAY: We are going to have to talk to the staff about what works best for them as well. I am just saying that at some point I believe we will have to -- we will have to stop and think,

okay, is there anything now that we should say to you or do we just want to keep on down this -- trucking down this road.

MS. COFFIN: Right.

CHAIRMAN RAY: I have no -- I can't tell you right now how that is likely to come out.

MS. COFFIN: I understand.

CHAIRMAN RAY: Poll everybody and see if there is a feeling that there is a need to communicate with you.

MS. COFFIN: That's it.

CHAIRMAN RAY: Any questions for Stephanie? All right.

Well, I will tell the subcommittee members that the calendar that Sherry produces reflects, obviously, a discussion of more detail with the staff as to when we should anticipate having meetings. We have to, most of us, look further than April in deciding if we can support meetings and when they are likely to be held.

So that will be coming shortly after the full committee meeting, an update of the outlook. Any comments or questions from anyone?

Now I will correctly, I think, say we will adjourn.

MEMBER SHACK: Are you going to send around electronic versions of all the presentations, so I can discard all the paper?

MR. WANG: If you request, yes.

MEMBER ARMIJO: Put them all on a CD for me.

MR. WANG: Sure.

CHAIRMAN RAY: We have three different modes among the members, electronic, CD and paper. I know you would like to have just one of the three, but it turns out that some of us deal in one or the other.

MEMBER BROWN: Until my DSL line, which is presently running at 10 kilobytes per second -- I would like a CD. I can't even download an e-mail, much less anything else, right now.

CHAIRMAN RAY: Thank you. We are going to adjourn and go off the record.

(Whereupon, the foregoing matter went off the record at 4:17 p.m.)

AP1000 Reference Combined License Application Presentation to ACRS Chapter 13 Standard Topics

February 3, 2010

R-COLA Chapter 13: Standard Topics

Conduct of Operations

13.1 Organizational Structure of Applicant

13.2 Training

13.3 Emergency Planning

13.4 Operational Programs

13.5 Plant Procedures

13.6 Security

13.7 Fitness for Duty

R-COLA Chapter 13: Major Topics

DCD incorporated by reference

- The only Standard Departure taken is to section numbering (STD DEP 1.1-1)

Majority of FSAR Chapter 13 information is Plant Specific (e.g., Organization)

Major supplemental information

- Operational Programs milestones (Table 13.4-201)
- Addressing COL items (next slide)

R-COLA Chapter 13: COL Items

COL 13.2-1 Training Program for Plant Personnel

- FSAR Section 13.2 provided training program description
- Incorporated NEI 06-13A

COL 13.4-1 Operational Programs

- Provided FSAR Table 13.4-201, operational programs required by the NRC regulations
- The table provides listing of programs, regulatory requirements and implementation milestone

R-COLA Chapter 13: COL Items

COL 13.5-1 Plant Procedures

- FSAR 13.5 describes administrative and other procedures used to conduct the routine operating, abnormal, and emergency activities in a safe manner.

R-COLA Chapter 13: Open Items

All chapter 13 Open Items are Plant Specific

AP1000 DCWG

Bellefonte 3&4 *Lee Nuclear 1&2* *Summer 2&3* ***Vogtle 3&4*** *Harris 2&3* *Levy 1&2* *Turkey Point 6&7*

United States Nuclear Regulatory Commission

Protecting People and the Environment

Presentation to the ACRS Subcommittee

AP1000 Combined License Application Review

Chapter 13 Sections 13.4 Operational Programs

February 3, 2010

Staff Review Team

- Project Manager
  - Denise McGovern, PM, AP-1000 COL, Chapter 13

Overview of COL FSAR Standard Content Chapter 13 Sections 13.4

FSAR Section	IBR?	COL Standard Content	Required Site-Specific Content
13.4 Operational Programs	Yes	Table – Operational Programs Required by NRC Regulations	None

STD COL 13.4-1

Operational Programs Required by NRC Regulations

Table 13.4-201

- Addressed operational programs and implementation
- Operational program implementation not addressed in regulation – License Condition 3
- Timing of information related to operational programs to support NRC inspection activities – License Condition 6

Standard Content
Table 13.4-201 (SER Example)

Operational Program	Implementation Milestone(s)	Implementation Requirement(s)	SER Section(s)
1. Inservice Inspection Program	Prior to commercial service.	10 CFR 50.55a(g); ASME XI IWA-2430(b)	5.2.4, 5.4.2, 6.6
2. Inservice Testing Program	After generator online on nuclear heat.	10 CFR 50.55a(f), ASME OM Code	3.9.6, 5.2.4
3. Environmental Qualification Program	Prior to initial fuel load.	License Condition	3.11

United States Nuclear Regulatory Commission

Protecting People and the Environment

Presentation to the ACRS Subcommittee

AP1000 Combined License Application Review

Chapter 13 Sections 13.1, 13.2 & 13.5 Conduct of Operations

February 3, 2010

Staff Review Team

- Technical Staff
  - Michael Junge, Chief, COLP
  - Jim Kellum, Lead Reviewer, COLP

- Project Manager
  - Denise McGovern, PM, AP-1000 COL, Chapter 13

Overview of COL FSAR Standard Content Chapter 13, Conduct of Operations Sections 13.1, 13.2 & 13.5

FSAR Section	IBR?	COL Standard Content	Required Site-Specific Content
13.1 Organizational Structure of Applicant	Yes	None	Organizational Structure
13.2 Training	Yes	NEI 06-13A Rev.1	
13.5 Plant Procedures	Yes	Addressing Plant Procedures	

STD COL 13.2-1 Licensed Operators and Non-Licensed Plant Staff Training

NEI 06-13A Revision 1 - Template for an Industry Training Program

- Provides the description of the training programs for plant personnel, including the requalification program for licensed operators.

STD COL 13.5-1
Plant Procedures

COL applicants referencing the AP1000 will address:

- Administrative Procedures
- Operating Procedures

ACRS Subcommittee Presentation
SER Chapter 13

Discussion/Committee Questions

NuStart Energy sm

AP1000 Reference Combined License Application Presentation to ACRS Chapter 15 Selected Topics

February 2, 2010

R-COLA Chapter 15: Standard Topics

Accident Analyses

15.0 General Information

15.1 Increase in Heat Removal from the Primary System

15.2 Decrease in Heat Removal by the Secondary System

15.3 Decrease in Reactor Coolant System Flow Rate

15.4 Reactivity and Power Distribution Anomalies

15.5 Increase in Reactor Coolant Inventory

15.6 Decrease in Reactor Coolant Inventory

15.7 Radioactive Release from a Subsystem or Component

15.8 Anticipated Transient Without Scram

15A Evaluation Models and Parameters for Analysis of Radiological Consequences of Accidents

15B Removal of Airborne Activity from the Containment Atmosphere Following a LOCA

R-COLA Chapter 15: Major Topics

- **DCD incorporated by reference**
  - No Standard Departures taken
- **Majority of FSAR Chapter 15 information is IBR of DCD**
- **Standard supplemental information**
  - None

R-COLA Chapter 15: COL Items

No Standard COL Items

R-COLA Chapter 15: Open Items

OI 15.0-1 **Calorimetric Power Uncertainty (STD COL 15.0-1)**

OI 15.4-1 **Re-insert Reference to GL 85-05 re Boron Dilution (Chapter 1 administrative item)**

NuStart Energy sm

AP1000 DCWG

Duke Energy®

SOUTHERN COMPANY

SCE&G®
A SCANA COMPANY

AP1000
Westinghouse

Progress Energy

FPL.

TVA

Bellefonte 3&4 *Lee Nuclear 1&2* *Summer 2&3* *Vogtle 3&4* *Harris 2&3* *Levy 1&2* *Turkey Point 6&7*

AP1000 Reference Combined License Application Follow-up Information to ACRS FSAR Chapter 9 – Table 9.5-201

February 3, 2010

BTP CMEB 9.5-1 C.1.b wording:

Fires involving facilities shared between units and fires due to man-made site-related events that have a reasonable probability of occurring and affecting more than one reactor unit (such as an aircraft crash) should be considered.

Applicable DCD Table excerpt:

Table 9.5.1-1 (Sheet 2 of 33) AP1000 FIRE PROTECTION PROGRAM COMPLIANCE WITH BTP CMEB 9.5-1			
BTP CMEB 9.5-1 Guideline	**Paragraph**	**Comp**	**Remarks**
15. Fires due to man-made site-related events that have a reasonable probability of occurring and affecting more than one reactor unit should be considered.	C.1.b	WA	To be evaluated on a site-specific basis. Plant siting decisions are expected to preclude the need to consider such events.

Applicable FSAR Table excerpt:

TABLE 9.5-201 (Sheet 3 of 7) AP1000 FIRE PROTECTION PROGRAM COMPLIANCE WITH BTP CMEB 9.5-1			
BTP CMEB 9.5-1 Guideline	**Paragraph**	**Comp**	**Remarks**
Fire Protection Analysis			
15. Fires due to man-made site-related events that have a reasonable probability of occurring and affecting more than one reactor unit should be considered	C.1.b	C	Comply Subsections 2.2 and 3.5 establish that these events are not credible

From FSAR

2.2.3.3.2 Fire Due to an Accident at Offsite Industrial Storage Facility

Units 3 and 4 are located at a farther distance from Plant Wilson than Units 1 and 2. Drawing from the conclusion based on the previous evaluation of Units 1 and 2, any industrial fire due to diesel oil or miscellaneous oils stored at Plant Wilson ***would not*** *have an impact on control room habitability or* ***cause thermal damage to safety-related structures at Units 3 and 4****.*

United States Nuclear Regulatory Commission

Protecting People and the Environment

Presentation to the ACRS Subcommittee

AP1000 Combined License Application Review Standard Content for

Chapter 15
Accident Analyses

February 3, 2010

Staff Review Team

- **Technical Staff**
  - **Yi-Hsiung (Gene) Hsii,** Reactor Systems, Nuclear Performance & Code Review Branch
  - **Jay Lee**, Siting and Accident Consequences Branch
  - **Michelle Hart**, Siting and Accident Consequences Branch
- **Project Management**
  - **Donald Habib,** Chapter 15, AP1000 Standard Content COL
  - **Joseph Sebrosky,** AP1000 Standard Content COL

Overview of AP1000 Standard Content Chapter 15 - Accident Analysis

FSAR Section	IBR?	COL Standard Content	Required Site-Specific Content
15.0 Accident Analysis	Yes	**Calorimetric uncertainty methodology (open item)**	None
15.1 Increase in Heat Removal from the Primary System	Yes	None	None
15.2 Decrease in Heat Removal by the Secondary System	Yes	None	None
15.3 Decrease in Reactor Coolant System Flow Rate	Yes	None	None
15.4 Reactivity and Power Distribution Anomalies	Yes	**Inadvertent boron dilution, Generic Letter 85-05, (open item)**	None
15.5 Increase in Reactor Coolant Inventory	Yes	None	None
15.6 Decrease in Reactor Coolant Inventory	Yes	None	Atmospheric dispersion factors
15.7 Radioactive Release from a Subsystem or Component	Yes	None	Liquid release
15.8 Anticipated Transients without Scram	Yes	None	None
Appendix 15A Evaluation Models and Parameters for Analysis of Radiological Consequences of Accidents	Yes	None	Atmospheric dispersion factors
Appendix 15B Removal of Airborne Activity from the Containment Atmosphere Following a LOCA	Yes	None	None
Radiological Consequences of Accidents	Yes	**Dual unit analysis**	

15.0 Accident Analysis

- COL FSAR Section 15.0 incorporates by reference with no departures or supplements Section 15.0 of Revision 17 of the AP1000 DCD
- In response to RAI-SRP15.0-SRSB-02 pertaining to assumed 1% initial power uncertainty in safety analysis, Westinghouse proposed COL Information Item 15.0-1 (to be included in AP1000 DCD, Rev. 18).
  - Following selection of actual plant operating instrumentation and calculation of instrumentation uncertainties of operating plant parameters prior to fuel loads, COL holder will calculate primary power calorimetric uncertainty, using an NRC acceptable method, and confirm it is bounded by the safety analysis uncertainty.
- Staff identifies Open Item 15.0-2 for implementation of COL Info Item 15.0-1
  - Submit information to support 1% power measurement uncertainty
    - A reference to NRC approval of the main feedwater and power measurement methodology, instrumentation, and associated uncertainties, or
    - A detailed description of analyses of main feedwater flow and power measurement uncertainties.

Generic Letter 85-05, Inadvertent Boron Dilution Event

- GL 85-05 urges each licensee to ensure its plants have adequate protection against boron dilution events
- GL 85-05 was resolved based on analyses of inadvertent boron dilution events, terminated by automatic functions, or operator action with sufficient time available (NUREG-1793, DCD SER)
- COL Item 13.5-1 requires development of emergency operating procedures
- BLN COL FSAR, Table 1.9-204, “Generic Communications Assessment,” listed Bulletins and GLs
- GL 85-05 was included in Table 1.9-204, Rev. 0, but removed in Rev. 1
- Staff identified Open item 15.4-1
  - Reinsert a reference to GL 85-05 in Table 1.9-204 to provide a cross reference to COL information item 13.5-1

STD SUP 6.4-1
Dual Unit Analysis for Control Room Habitability

- The standard response stated that:

  Radiological dose to the control room operators at an adjacent AP1000 unit due to a radiological release from another unit is bounded by the dose to control room operators on the affected unit. Simultaneous accidents at multiple units at a common site are not considered to be a credible event.

- The staff agrees with the standard response to STD 6.4-1

United States Nuclear Regulatory Commission

Protecting People and the Environment

Presentation to the ACRS AP1000 Subcommittee

AP1000 Design Certification Amendment Application Review

Regulatory Treatment of Non-Safety Systems

February 3, 2010

Mark Caruso
Malcolm Patterson

Purpose

- Review the history of regulatory treatment of non-safety systems (RTNSS).
- Explain the scope of RTNSS.
- Describe the staff's review of RTNSS in the AP1000 design certification amendment application.
- Answer the subcommittee's questions.

Review of Passive Plant Designs

- Passive systems perform primary safety functions:
  - reactor water make-up
  - core cooling
  - containment cooling
- Passive systems use natural forces and DC power to perform their safety function and are designated safety-related
- Uncertainties in passive system reliability not completely addressed by testing and design enhancements

Review of Passive Plant Designs

- Active systems:
  - not credited in design basis accident analysis
  - generally designated as non-safety systems

  Some key active systems in passive plant designs:
  - provide defense-in-depth for some safety functions
  - reduce challenges to passive systems
  - support passive systems 72 hours post-accident
  - may be risk-significant

- Commission and industry agreed that some regulatory oversight of some non-safety systems may be appropriate

Process

- Identify non-safety SSCs that deserve regulatory treatment
- Determine Reliability/Availability Mission for each SSC
- Determine appropriate treatment for each SSC
  - technical specification controls
  - availability controls
  - design considerations
  - reliability assurance program

RTNSS SSC Selection Criteria

Non-safety-related SSCs:

- relied upon to meet ATWS and SBO rules
- relied upon for core cooling, containment heat removal, or control room habitability more than 72 hours after accident
- provide diagnostic information more than 72 hours after accident
- relied upon to meet Commission's safety goals
- that cause initiating event that significantly affect CDF or LRF (> 1%)
- relied on to meet containment performance goals
- (added to the design) to prevent significant adverse interaction between active and passive systems

SSCs under RTNSS in Certified Design

Selection Criteria	Non-Safety SSCs Receiving Treatment
Relied upon to meet ATWS and SBO rules SBO ATWS	• none • diverse actuation functions (reactor trip, turbine trip, passive RHR) • non-1E dc power • uninterruptible power supply
Relied upon for long term safety (72 hour post-accident) Core Cooling Containment Heat Removal Spent Fuel Pool Cooling Control Room Habitability Post Accident Monitoring	• none • pump and diesel generator for make-up for passive containment cooling storage tank • fans and open doors for ventilation cooling • electric power supply
Relied upon to meet Commission's safety goals	• diverse actuation system (manual) • controls (ATWS and ESF)
Cause initiating event that significantly affect CDF or LRF AT-POWER SHUTDOWN	• power conversion system • onsite & Offsite ac Power • residual heat removal system • component cooling water system • service water system
Relied upon to meet containment performance goals	• reactor Vessel insulation design • hydrogen Igniters
Prevent significant adverse interaction between active and passive systems	• none

Reliability Assurance Program

- includes elements for design control and quality assurance
- staff review per Standard Review Plan 17.4
- design reliability assurance program (D-RAP) until initial fuel load
- operational-phase reliability assurance activities (OPRAAs) after initial fuel load

AP1000

Staff review of RTNSS limited to

- DCA changes
  - in program
  - in scope
- COL
  - deviations
  - plant-specific items

DCA Changes

Program

- no changes (18 QA requirements)

Scope

- nothing deleted (rationale changes)
- a few additions

DCD Changes (continued)

Items added

- remote DAS cabinet
- 6900 Vac buses
- check valves in the RNS
- containment isolation valves (letdown)

COLA Changes

- no deviations
- scope incorporated by reference
- QA programs are licensee's responsibility

  described in FSAR Section 17.5,
  "Quality Assurance Program Description—
  New License Applicants"

U.S.NRC
United States Nuclear Regulatory Commission
Protecting People and the Environment

Questions?

AP1000 RCP Flywheel

Dale Wiseman

February 3, 2010

Westinghouse

Purpose

- Provide Information Regarding AP1000 Reactor Coolant Pump Flywheel
  - Materials
  - Inspection Requirements

AP1000 RCP Outline

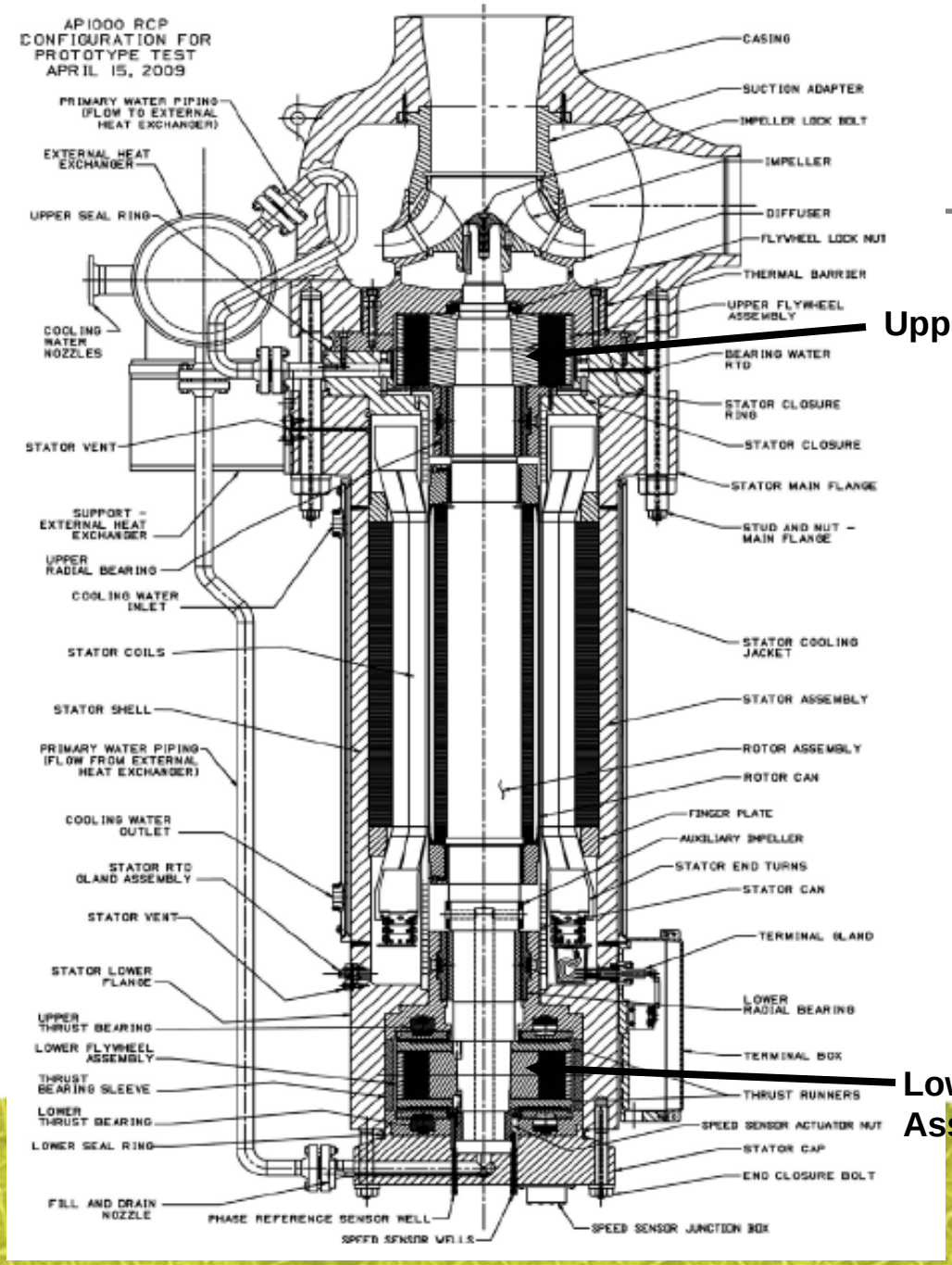

Upper Flywheel Assembly

Lower Flywheel Assembly

Flywheel Configurations

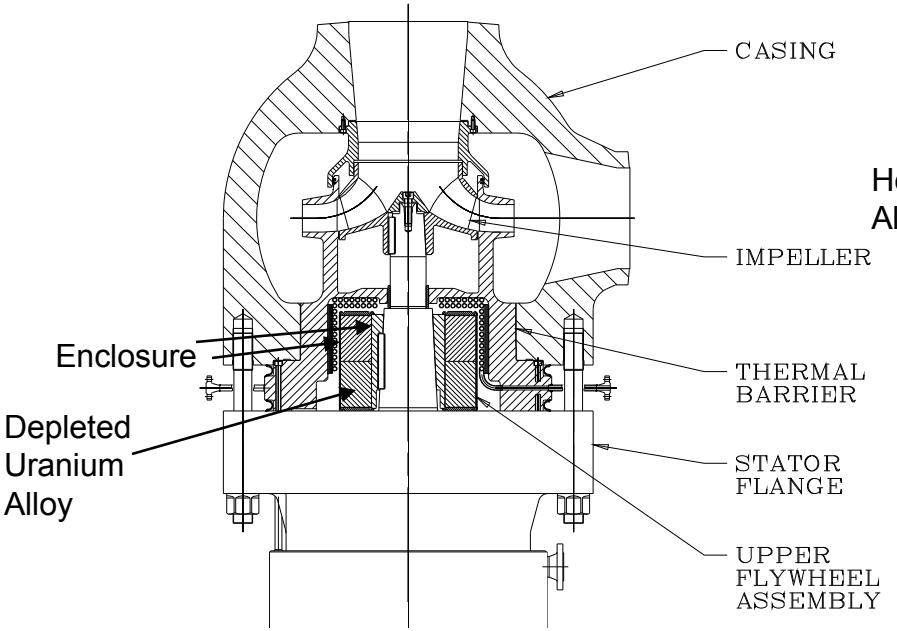

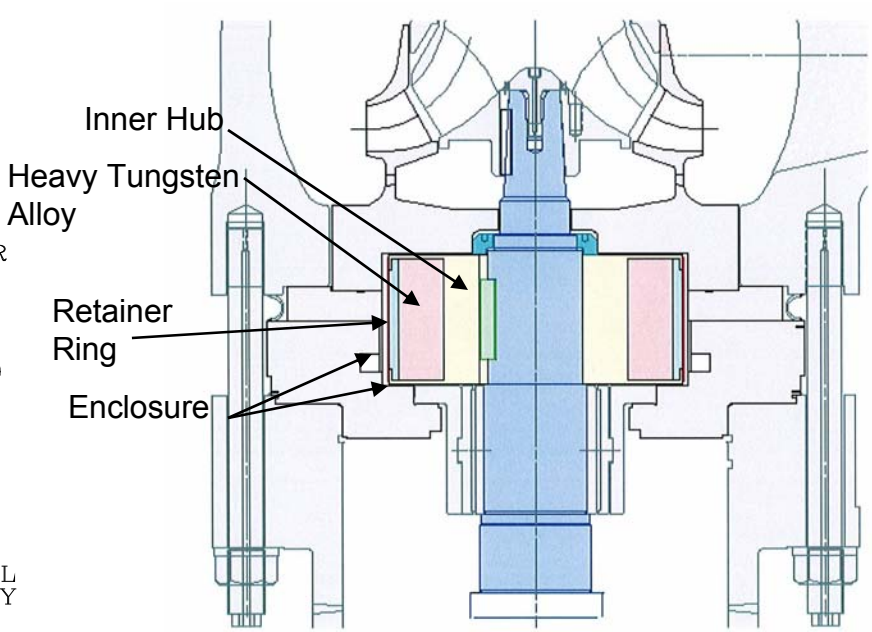

<u>DCD Revision 15</u>
Depleted Uranium Alloy Enclosure

<u>DCD Revision 17</u>
Inner Hub
Heavy Tungsten Alloy
Outer Retainer Ring
Enclosure Plates and Shell

Flywheel Materials

	Shaft	Inner Hub	Flywheel	Retainer Ring	Enclosure
DCD Rev 15	403 SST	N/A	Depleted Uranium Alloy U-2Mo	N/A	Alloy 690
DCD Rev 17	403 SST	403 SST	Tungsten Heavy Alloy	18 Ni Maraging Steel	Alloy 625
Post DCD R17 (RAI 5/09)	403 SST	403 SST	Tungsten Heavy Alloy	18Cr-18Mn	Alloy 625

Flywheel Materials Specifications

	Shaft	Inner Hub	Flywheel	Retainer Ring	Enclosure
DCD Rev 15	ASTM 336 – Gr F6	N/A	Design Spec Specified	N/A	ASTM B168 and B564
DCD Rev 17	ASTM 336 – Gr F6	ASTM 336 – Gr F6	ASTM B777 Class 4	AMS 6519	ASTM B443 and B564
Post DCD R17 (RAI 5/09)	ASTM 336 – Gr F6	ASTM 336 – Gr F6	ASTM B777 Class 4	ASTM A289	ASTM B443 and B564

Westinghouse

Discussion of Material Changes

- **High Density Flywheel Material Change – Depleted Uranium to Tungsten Heavy Alloy**
  - Increase in Required Inertia - As the RCP Design was Finalized, Friction Losses Increased Due to Increased Power Requirements, Detailed Loss Calculations, etc.
  - Depleted Uranium was Structural Component – Increase in Inertia Required Increase in Diameter Which Resulted in High Stress Levels
  - Evaluated Alternate Materials – Tungsten Heavy Alloy
    - Advantages of Tungsten Heavy Alloy – Multiple Suppliers, Known Material Properties/Fracture Toughness (ASTM), Volumetric Examinations Standard, No Environmental/Health Issues, Owning/Handling Not Regulated
  - DCD Revision 17 Flywheel Configuration Changed Such that High Density Material is Not a Structural Part
    - Retainer Ring Holds Tungsten Heavy Alloy Segments, Only Structural Components are Ring and Inner Hub

Discussion of Material Changes (Con.)

- Flywheel Enclosure
  - Change from Alloy 690 to Alloy 625
  - Advantages of Alloy 625 – Lower Coefficient of Thermal Expansion (Reduces Stresses in Enclosure); Higher Yield Strength; Easier to Weld
- Retainer Ring
  - DCD Revision 17 – 18 Ni Maraging Steel for High Strength
    - Flywheel Mockup for Manufacturability and Demonstrate Balancing
      - Cracked Retainer Ring
      - Hydrogen Embrittlement/Stress Corrosion Cracking
  - Retainer Ring Material Change Included in Response to RCP RAI in May 2009
    - Ring Changed to18Cr-18Mn
    - Material Developed for Retainer Ring Applications in Generators Because of Cracking in the Materials in Use (18Mn-5Cr)
    - Not Susceptible to Corrosion or Hydrogen Assisted Stress Corrosion Cracking
    - Lower Strength Requires Thicker Retainer Ring, Reduces Tungsten Alloy Mass

Summary of Inertia Changes

	Rotating Inertia ($lb\text{-}ft^2$)	Reason for Change
DCD Rev 15	16,500	
DCD Rev 17	23,510	Detailed Design-Additional Losses
Post DCD R17 (RAI 5/09)	23,110	Change in Retainer Ring Reduced Tungsten Volume/Mass

- Flow Coastdown Requirements in Design Spec Have Not Changed
- Calculated Pump Coastdown Flows Have Always Been Higher Than Those Used in the Safety Analyses

Westinghouse

Flywheel Inspection/Testing Requirements

- Each Structural Component Inspected Prior to Final Assembly According to Requirements In Section III, NB-2500 of ASME Code
  - Inner Hub
    - Ultrasonic Examination
    - Magnetic Particle Examination
    - Liquid Penetrant Examination of Inside Surface After Finishing Operations
  - Retainer Ring
    - Liquid Penetrant Examination
    - Ultrasonic Examination
    - Liquid Penetrant Examination of Outside Surface After Finishing Operations
  - Enclosure (Non-Structural)
    - Dye Penetrant of Welds
    - Enclosure Leak Tested
- Impact Testing – Inner Hub and Retainer Ring Material
- No In-Service Inspection Required
  - Postulated Flywheel Missiles are Contained Within the Pressure Boundary
  - In-Service Inspection of the Flywheel Would Require Pump Removal, Disassembly, and Removal of Flywheel Enclosures
  - High Radiation Exposure

Flywheel Missile Analyses

- Follows Procedure Used for Turbine Disk Fractures (Hagg and Sankey, "The Containment of Disk Burst Fragments by Cylindrical Shells")
  - Stage 1 – Inelastic Impact and Transfer of Momentum to the Pressure Boundary (PB)
  - Stage 2 – Dissipation of Energy in Plastic Tensile Strain in the PB
  - Calculation Assumptions
    - Ignore the Retainer Ring and Enclosure Components
    - Minimum ASME Material Strength Properties @ Design Temperature
    - All Heavy Alloy Segments Impact the PB
    - Upper Flywheel – Check Penetration Through Thermal Barrier and Stator Closure
    - Lower Flywheel – Check Penetration Through Stator Lower Flange
  - DCD Rev 17 Minimum Margin is 1.8 for Upper Flywheel Stage 2
  - Minimum Margin for Flywheel Design Change in Retainer Ring Material (May 2009 RAI Response) Increased to 2.0 for Upper Flywheel Stage 2 Due to Small Changes in Tungsten Alloy Segments and Pressure Boundary

U.S.NRC

United States Nuclear Regulatory Commission

Protecting People and the Environment

AP1000 Design Center Upcoming Interactions with the ACRS

Eileen McKenna, Branch Chief (AP1000 Projects)
Stephanie Coffin, Branch Chief (AP1000 Projects)
February 2 - 3, 2010

Phase 5 ACRS Interactions - DCA

- Westinghouse Design Certification Amendment Review
  - Phases 2 and 3 nearly complete
  - 18 of 19 SER with open items chapters issued and presented
  - Chapters 3.7/3.8 and 6 schedules are under evaluation
- Staff will be issuing the Advanced Final Safety Evaluation Report (AFSER) on a chapter-by-chapter basis
- All open items will be resolved prior to chapter issuance. Some confirmatory items may remain.
- Some review areas have not previously been presented to the ACRS for this design center (e.g., security reviews, aircraft impact analysis)
- Expect multiple meetings with ACRS AP1000 subcommittee through the calendar year

Phase 5 ACRS Interactions - RCOL

- AP1000 COL Standard Content Review
  - Phases 2 and 3 nearly complete
  - 18 of 19 SER with open items chapters issued; most presented
  - Chapters 3.7/3.8 and 6 schedules are under evaluation
- Staff will be issuing the Advanced Final Safety Evaluation Report (AFSER) on a chapter-by-chapter basis
- All open items will be resolved prior to chapter issuance. Some confirmatory items may remain.
- Some review areas have not previously been presented to the ACRS for this design center (e.g., security reviews, loss of large areas due to fires/explosions)
- Expect multiple meetings with ACRS AP1000 subcommittee through the calendar year

Presentation Format

- DCA and RCOL chapters will be presented at the same meeting with separate presentations for the DCA and RCOL
- DCA and COL applicants and NRC staff presentations
- Focus of staff presentations will be on key review areas and closure of open items
- Chapters to be presented will be issued at least 30 days prior to meeting

ACRS Interactions - SCOLs

- Informational briefings on specific topics of interest related to the Summer and Levy County COL reviews
- Topics from chapters 2 (site characteristics), 8 (electrical), and 13 (emergency preparedness), and other site-specific topics that may be of interest to the ACRS
- Feedback on review topics of particular interest to ACRS members welcomed
- Targeting April 2010

Upcoming Topics

- March 2010
  - Shield Building

- April 2010
  - Informational briefings for Summer and Levy
  - AFSER briefings on AFSER for DCA and RCOL
    - Chapter 2 (site characteristics)
    - Chapter 4 (reactor)
    - Chapter 11 (radioactive waste management)
    - Chapter 12 (radiation protection)