Official Transcript of Proceedings

NUCLEAR REGULATORY COMMISSION

Title: Advisory Committee on Reactor Safeguards
Advanced Boiling Water Reactors
Subcommittee (ABWR)

Docket Number: (n/a)

Location: Rockville, Maryland

Date: Thursday, March 18, 2010

Work Order No.: NRC-117 Pages 1-318

NEAL R. GROSS AND CO., INC.
Court Reporters and Transcribers
1323 Rhode Island Avenue, N.W.
Washington, D.C. 20005
(202) 234-4433

DISCLAIMER

UNITED STATES NUCLEAR REGULATORY COMMISSION'S
ADVISORY COMMITTEE ON REACTOR SAFEGUARDS

The contents of this transcript of the proceeding of the United States Nuclear Regulatory Commission Advisory Committee on Reactor Safeguards, as reported herein, is a record of the discussions recorded at the meeting.

This transcript has not been reviewed, corrected, and edited, and it may contain inaccuracies.

UNITED STATES OF AMERICA

NUCLEAR REGULATORY COMMISSION

+ + + + +

ADVISORY COMMITTEE ON REACTOR SAFEGUARDS

(ACRS)

+ + + + +

SUBCOMMITTEE ON ADVANCED BOILING WATER REACTORS

(ABWR)

+ + + + +

MEETING ON THE SOUTH TEXAS PROJECT COMBINED

OPERATING LICENSE APPLICATION (STP COLA)

+ + + + +

THURSDAY, MARCH 18, 2010

+ + + + +

ROCKVILLE, MARYLAND

The Subcommittee met, at the Nuclear Regulatory Commission, Two White Flint North, Room T2B1, 11545 Rockville Pike, at 8:30 a.m., Said Abdel-Khalik, ACRS Chairman, presiding.

ACRS MEMBERS:

SAID ABDEL-KHALIK, ACRS Chairman

J. SAM ARMIJO, ACRS Vice Chairman

JOHN W. STETKAR, ACRS Member-at-Large

CHARLES H. BROWN, JR., Member

1 JOHN D. SIEBER, Member

C-O-N-T-E-N-T-S

Branch Chief, Health Physics

C-O-N-T-E-N-T-S (CONTINUED)

C-O-N-T-E-N-T-S (CONTINUED)

C-O-N-T-E-N-T-S (CONTINUED)

C-O-N-T-E-N-T-S (CONTINUED)

C-O-N-T-E-N-T-S (CONTINUED)

P-R-O-C-E-E-D-I-N-G-S

8:29 a.m.

CHAIRMAN ABDEL-KHALIK: (presiding) The meeting will now come to order.

This is a meeting of the ABWR Subcommittee of the Advisory Committee on Reactor Safeguards. I am Said Abdel-Khalik, Chairman of the Subcommittee.

ACRS members in attendance today are Jack Sieber, John Stetkar, Sam Armijo, and Charlie Brown.

Ms. Maitri Banerjee is the Designated Federal Official for this meeting.

The NRC staff review of STP's combined license application has reached the point where they have started to generate the Safety Evaluation Reports with open items for the various chapters. In our March 2nd Subcommittee meeting, we discussed the COLA FSAR and the corresponding SER with open items for Chapters 1, 4, 11, 12, 15, and 18.

In today's meeting, we are scheduled to discuss Chapters 5, 8, 16, and 17. Additionally, we will follow up on several items from the last meeting.

We have scheduled additional ABWR Subcommittee meetings through June, followed by a meeting of the full Committee in the middle of the year.

Although the agenda goes chapter by chapter, I expect today's discussion to be issue-centered related to the technical issues in the COLA and the SER.

The rules for participation in today's meeting were announced in The Federal Register on March 9, 2010. Parts of this meeting may need to be closed to the public to protect proprietary information. I am asking the NRC staff and the applicant to let us know when there is a need to close the meeting before we enter into such discussion and to verify that only people with the required clearance and need to know are present.

We have a telephone bridge line for the public and stakeholders to hear the deliberations. To minimize disturbance, the line will be kept in listen-only mode until the last 10 minutes of this meeting to provide an opportunity to members of the public joining us through this bridge line who would like to make a statement or provide comments. The line will be turned off during the closed portions of the meeting.

As the meeting is being transcribed, I request that participants in this meeting use the microphones located throughout this room when addressing the Subcommittee. Participants should first identify themselves and speak with sufficient clarity and volume

so that they can be readily heard.

We will now proceed with the meeting, and I call upon Mr. Mark Tonacci of NRO to begin the presentation.

MR. TONACCI: Good morning. I don't really have any introductory statement this morning other than I am glad to be here and look forward to a healthy discussion today. I am going to turn it over to George Wunder to kick us off.

MR. WUNDER: Good morning, Mr. Chairman. Good morning, gentlemen. Good morning, Maitri. Thank you again for having us today.

We are going to be presenting today Chapters 5, 8, 16, and 17. I am joined by my fellow Project Managers Michael Eudy and, later on, by Adrian Muniz, who will present Chapter 8, and Raj Anand, who will present Chapter 17. The technical staffs who will also be presenting those chapters will be introduced at that time.

I would like to give brief time to Scott Head to introduce his staff before I launch into my presentation on action items from last time.

MR. HEAD: Thank you, George.

Mr. Chairman, thank you for giving us this opportunity to brief the ACRS again.

We don't have an introduction presentation like we did before. I felt, since we have already done that, along those lines, if we have presented before, then we aren't going to be introducing ourselves again.

But I would note today that we do have Tim Walker, our Manager of Quality, who will be with us today. He is just back from Japan after observing a number of activities related to some of our large components that are being produced in Japan at this point in time.

We have Evan Heacock with us today, who is our lead engineer responsible for electrical activities and has a lot of ERCOT-related grid experience that we felt would be useful for the Chapter 8 discussion.

We have Bill Stillwell, PRA Supervisor, to discuss a number of topics today.

We have Tom Daley, our Mechanical Supervisor in Engineering, who will be presenting associated with Chapter 5.

Then, Steve Cashell, expert on tech specs, that is helping us at the South Texas Project.

They will all introduce themselves as we go through the day.

CHAIRMAN ABDEL-KHALIK: Thank you.

MR. WUNDER: Thank you.

Next slide, please.

We have four issues that we would like to go over that we identified as questions that were raised in our March 2nd meeting. I believe that Dr. Armijo had a question regarding the future Fuel Amendment and the topical reports related to that action, and when they would be presented.

I believe there were also a couple of questions. There was one regarding comparative doses at the operating Japanese ABWRs as opposed to other operating BWRs, and we've got Ed Roach, who will be making a presentation on that.

Then, there was another question regarding the GALE code and its revision, and how that is likely to affect applicants. We also have a brief presentation on that.

But, first, we would like to address Chairman Abdel-Khalik's question regarding Part 21 notifications.

Next slide, please.

There were two issues here. There was a specific Part 21 notification regarding thermal-hydraulic stability, but, then, that led to kind of a wider question, a more generic question, about how we handle Part 21 issues. I would like to give you some background on that

to talk about it generically, and, then, I will turn it over to the Reactor Systems folks. They can talk about the specific issue.

First off, all Part 21 submittals are reviewed by the NRC. For NRO, New Reactors, this job falls to DCIP, the Division of Construction Inspection Programs. DCIP reviews the technical issues and identifies the technical issues and forwards the Part 21 reports to the appropriate NRO Branch Chief. The Technical Branch Chief, in turn, makes a determination on the applicability of that particular Part 21 issue to any application that is currently under staff review.

Issues that are determined to be of general concern and rise to that level are addressed in generic communications, which are issued by the staff. The agency has a formal procedure for dealing with Part 21 issues. It is an NRR Office letter. It is called LIC-403, but we have adopted it for use in NRO. We don't yet have our own procedure, and I don't know that we will ever have our own because it is a fine procedure for dealing with Part 21 issues.

As far as its application to certified designs, when a certified design is referenced in a combined license application, all the identified Part 21 issues that are

associated with that have to be discussed in the application.

I meant to put up a Federal Register site here, where we talk about this in a little more detail. It is not here on the slide, but the FR site is 72 FR 49.352. We have also just issued a RIS on this for comment that discusses and explains our position on this issue in a little more detail.

If you have any questions, I will try to deal with them. But if not, I can turn it over to the Reactor Systems fellows for the detailed discussion of the Part 21.

CHAIRMAN ABDEL-KHALIK: Okay. The question, then, is, do we have a complete list of Part 21s that were ruled to be applicable to the ABWR that came down from 1997 until 2010?

MR. WUNDER: As far as I know, as far as being able to lay our finger on a unified list, no. But they are supposed to have been addressed in the application. They are required to have been addressed in the application, any Part 21 issue that was identified up until that point.

VICE CHAIRMAN ARMIJO: Yes, but I think the question is, how does the staff know that the applicant has addressed it, if we don't have a list of all the

outstanding Part 21s that have come out after the DCD was --

MR. WUNDER: That is an issue that we are still looking at. We are trying to determine if, in fact, there are regulations and our procedures are such that these are guaranteed all to be encompassed, but I cannot lay my finger on that issue right now. We are still looking at it, and we are going to make sure that we have closed it, if there is any kind of a gap there.

CHAIRMAN ABDEL-KHALIK: So, as far as we are concerned, this is still an open item --

MR. WUNDER: Yes.

CHAIRMAN ABDEL-KHALIK: -- that needs to be addressed.

MR. WUNDER: Yes, sir.

CHAIRMAN ABDEL-KHALIK: Okay.

MR. WUNDER: We've got procedures. We've got office procedures in effect, but as far as saying with metaphysical certitude that we have identified all these issues, I can't do that today.

CHAIRMAN ABDEL-KHALIK: I'm only interested in physical certitude.

(Laughter.)

So, we will revisit this issue --

MR. WUNDER: Yes, sir.

CHAIRMAN ABDEL-KHALIK: -- once you have a definitive answer for us.

MR. WUNDER: Yes, sir.

CHAIRMAN ABDEL-KHALIK: Thank you.

MR. WUNDER: I would like to turn it over to George Thomas now to address thermal-hydraulic instability.

MR. THOMAS: Good morning.

In 2001, we were given notification about the thermal-hydraulic stability issue. Consultant Jose March-Leuba will talk about the stability issue now.

DR. MARCH-LEUBA: Thank you. This is Jose March-Leuba from Oak Ridge National Laboratory.

I have been a consultant for nuclear on the issue of the stability. So, I can address the Part 21 issues from the stability, in particular.

The one you see on the screen is the most important one. That is the one we call the DIVOM, Part 21, but there are only four quality issues related.

In the particular case of the Part 21, if you understand the process, whenever a graduate student in a foreign country finds out that there is an issue that might be related to a safety issue, he raises it.

There is a small committee of the BWR Owners Group, and they evaluate, make a notice. They decide, yes, there is really a potential issue. At that point, they issue a notification of Part 21.

So, the first step is called a notification that says something may happen; we are evaluating it. At this point, the clock starts running. It lasts, typically, 30 to 45 days, and the notification is fully evaluated. Most of them get thrown away; they say, no, this graduate student was wrong; there is no real safety issue.

If there is a real safety issue, then it requires a resolution. There is a system. First, you are notified, and then you accept the notification, and then you resolve it.

In the particular case of the DIVOM, Part 21, the previous methodology allows, or actually requires, that people use a generic DIVOM correlation which was deemed to be conservative for every single plant. Some calculations identified that, indeed, that was not the case. General Electric and the BWR Owners Group recommended that people do plant- and cycle-specific calculations for DIVOM.

Now that is a methodology resolution. The

way it was resolved, I have here a copy of the GESTAR methodology that General Electric uses. They are all other vendors and they have similar things. They went into the methodology and they changed, on page -- well, this is not GESTAR. This is an RAI. But I gave Dr. Abdel-Khalik a copy of this.

They strike out vessel use on generic DIVOM, and they put usual use of a plant-specific DIVOM. So, this is how this was originally resolved, and it applies to ABWR; it applies to ESBR. It applies to every single operating reactor.

From the point of view of the older Part 21s, they apply to the instrumentation and control sections of the long-term solution. There are some parameter settings that one uses to adjust the sensitivity for the detection of the instability before there is a scram.

There were some initial recommended values on the initial approval of the methodology. Afterwards, given some experience with some events that happened in 2002, there was a recommendation to tighten that sensitivity. It was too loose, and the BWR Owners Group recommended some values.

Those values are not incorporated by the vendor of the I&C system. So, whenever STP implements

an OPRM scram, solution 3, as they are committed to do, they will buy from a vendor. Today, they can only buy from one person. It is GE. It is the only one that has an approved methodology, an approved instrument that can be plugged into the protection system.

Back when the methodology was approved, there were two vendors. ABB was in the game, and now they are not supported anymore. And another vendor can come and license a different instrumentation, and they can improve it. It is the responsibility of that vendor to set up those sensitivity parameters in accordance to the BWROG recommendations, which follow the Part 21 resolution.

So, in conclusion, of all the Part 21 issues, and I know there are five of them, all of them are taken care of, and they apply to ABWR, through this procedure.

CHAIRMAN ABDEL-KHALIK: When you say "taken care of", meaning that the process will assure that they will be taken care of? As far as I'm concerned, I haven't seen how they are taken care of as of today.

MR. THOMAS: See, we got a commitment from STP that, before they start the plant, they will come with a new stability analysis that will take care of all these Part 21 problems.

CHAIRMAN ABDEL-KHALIK: Okay.

MR. THOMAS: So, that is okay for us.

CHAIRMAN ABDEL-KHALIK: I think if we have a resolution of the generic question as to how Part 21s will be addressed, this will automatically be taken care of. Therefore, we await the general response as to how the staff intends to assure that all relevant Part 21s have been, or will be, addressed.

Thank you.

MR. THOMAS: You're welcome. Thank you.

MR. EUDY: Hi. I'm Mike Eudy, Project Manager. I would like to give this time to South Texas, if they have anything to add.

MR. HEAD: Mr. Chairman, we do have some points we can make on the specific technical topic of the one that was just discussed, but if you want us to wait --

CHAIRMAN ABDEL-KHALIK: No, please do.

MR. HEAD: Okay. I will ask Jim Tomkins.

MR. TOMKINS: Jim Tomkins, STP Licensing.

CHAIRMAN ABDEL-KHALIK: Do you have any visual aids to go with your presentation?

MR. TOMKINS: I do not, no. I do not.

CHAIRMAN ABDEL-KHALIK: Okay.

MR. TOMKINS: So, let me just give a little

bit of the history. In our initial application for the COLA, we were working with General Electric, and we were made aware of the Part 21 issues via a licensing topical report that GE submitted to the NRC. That report was submitted in support of our COLA application.

In Revision 2, when GE was no longer on the project, we didn't have access to that topical report any longer. So, in that case, we changed and we made a commitment. We recognized that we needed to address the issues GE had identified, and we made a commitment that we would do that.

That commitment, I will just read it. "STPNO will provide an updated stability option 3 analysis once fuel is procured and the associated safety analysis is performed." So, that commitment is absolute. It doesn't say when we change the fuel. It is when any fuel is procured that we will do that analysis. That commitment was put in there specifically to address that issue.

So, I guess the point I wanted to make is we were aware of the issues, and we think we have a plan to address them. Actually, we are working on stability as we speak. Westinghouse is doing the work to support the Fuel Amendment. That will be the avenue by which we resolve it.

CHAIRMAN ABDEL-KHALIK: Do you have an answer at this time to the generic question of how Part 21s are handled in general?

MR. TOMKINS: Well, I can talk a little bit about our process. In developing the COLA, we followed Reg Guide 1.206 and the standard review plan. So, for any sections that had departures in them, we were required to look at the standard review plan. For sections of the COLA that didn't have a departure, the certified design still applied.

But recognize that we worked with GE on this project for, essentially, a year and a half. So, a number of issues like stability, containment analysis, although it wasn't really a Part 21, it is sort of in the same category. So, GE pointed out a number of these issues to us. Some of them are actually departures. It is their fixes to the DCD.

CHAIRMAN ABDEL-KHALIK: I will ask you the same question I asked the staff. Do you have a list of all applicable Part 21s to the sections which you may have incorporated by reference in the DCD that came about from 1997 until the present?

MR. TOMKINS: I do not believe we have a list at this point in time.

MR. HEAD: So, the topical had a list initially?

MR. TOMKINS: Well, the topical really just addressed ability.

MR. HEAD: Okay.

MR. TOMKINS: So, that was fairly narrow. You're asking the generic question --

CHAIRMAN ABDEL-KHALIK: Yes, sir, I am.

MR. TOMKINS: -- whether I have a global list?

MR. CHAPPELL: This is Coley Chappell, also from STP Licensing.

Part of the issue is that some departures or information that had to be changed was evaluated for Part 21, but may not have risen to that level. So, we will go back and look at that and determine which of the items might be a Part 21 --

CHAIRMAN ABDEL-KHALIK: But, again, the issue that my colleague raised here, without such a list, there is no way to guarantee that all those relevant issues have, indeed, been addressed. That is what we would like to assure ourselves, that this has been done.

MR. TOMKINS: Right. And recognizing your question at the last meeting was a good question, we

have actually undertaken that work. We are having a second check, if you will --

CHAIRMAN ABDEL-KHALIK: Okay.

MR. TOMKINS: -- of all the Part 21s to make sure we've got them all captured.

CHAIRMAN ABDEL-KHALIK: All right. Thank you.

MR. EUDY: NRC staff is doing the same.

CHAIRMAN ABDEL-KHALIK: Thank you. Okay. Let's proceed.

MR. EUDY: No more questions?

Okay. We will go ahead and go to the second topic of action items, the Fuel Topical Reports and Fuel Amendment.

When we presented Chapter 4 back on March 2nd, there were some questions raised regarding the Fuel Amendment and topical reports that will be supporting it. So, due to that interest, we wanted to give you a little bit of update on how we plan to move forward.

South Texas has proposed to send in a Fuel Amendment when they are closer to their procurement that will be a licensing amendment after it is already licensed, to introduce a new fuel. That is going to be in the form of a Fuel Amendment. We are not aware of any requirement

to bring it to ACRS, but due to the interest, what we are proposing is that we are expecting 10 topical reports.

Next slide. No one told me, "next slide". I meant to say to myself, "next slide".

(Laughter.)

We are expecting 10 topical reports to come in. Of those, seven currently have what we deem as dual applicability to both ABWR and BWRs. We have begun coordination to ensure that all three Subcommittees, ABWR, Power Uprate, and Thermal-Hydraulic Phenomena, can determine which of those topical reports they would like to see. We can do presentations, if you request them.

As of now, two of those topical reports are in. To give you a little bit of an update, we expect the first topical report, which is qualification of control system model, SAFR, that we might have our review finished in the fall of the 2010. We might be presenting to the ACRS as well. After June of this year, we should be getting the remaining eight topical reports phasing in.

That is all that I had to present on that topic. So, if there are any questions, or if South Texas would like to add anything to that, we will give them the opportunity.

MR. HEAD: Well, at this point, I would just note we would support whatever briefing the staff and ACRS agrees upon, whether it is on individual topicals or an all-encompassing presentation. We understand the interest and somewhat of a first-time evolution, and we would be happy to support whatever presentations you request.

VICE CHAIRMAN ARMIJO: You provided us with some viewgraphs of a January meeting, I think, with South Texas and Westinghouse and the staff. It had a pretty complete list of topical reports and what the issues were. So, I think, with that, I think our various Subcommittees within the ACRS can pick and choose the ones that we think are most important from our point of view. We will probably want to review them when you are ready.

MR. EUDY: Certainly. Okay. That's the plan.

Okay, if there's no more questions, I will move onto the third item, which is Japanese ABWR data comparisons. I will ask Ed Roach to come up, who is the Branch Chief for Health Physics. He will give that presentation.

MR. ROACH: Good morning, Mr. Chairman and

Committee. It is a pleasure to be here again.

I notice Dr. Ryan is not here, who was the one who posed these questions, but I hope the information will get back, or we are willing to come in and present again, if necessary.

From the Committee's last meeting, when we presented Chapter 12, this open item appeared. It was based on a comparison to the actual ABWRs that do operate. For us, that would be the one element would be Kashiwazaki-Kariwa, Units 6 and 7, which operated from 1997 to 2004. We normalized this data to millisieverts per megawatt-year, which normalizes them across all of -- I think that was Dr. Ryan's point.

So, Kashiwazaki-Kariwa Units 6 and 7 give you a .49 person-millisieverts megawatt-year. South Texas, as calculated, would present a .82 person-millisieverts megawatt-year. That is assuming, basically, an 85 percent capacity factor.

Next slide, please.

The data we used came from a letter from GE Hitachi that was part of the ESBWR. However, we did search out on the ISOE and the U.S. NRC data to compare various things.

This slide shows the assumptions used for

this calculation and a summary of the available data and the references. This slide also shows that, if you assume a 92 percent capacity factor, which is the U.S. average currently from 2000 to 2008, the estimated collective dose megawatts per year for STP 3 and 4 would decrease to 0.76 person-millisieverts megawatt-year. That is approximately 55 percent higher than the K6 and 7 data, but it is still well below the current operating steam and evidence, history that we have for BWRs in the U.S.

Next slide, please.

This chart is from the data in NUREG-0713 and the ISOE Asian Technical Center, ISOE Information Sheet 33, figure 2, dated 2009. This is the breakdown of the average collective dose per reactor and the total collective dose per megawatt-year for U.S. and Japanese BWRs from 1993 through 2008.

The Japanese data was broken down in 1993 to 2004 into conventional and improved units for collective dose. However, the collective dose per megawatt-year is only reported as an average for all BWRs. So, it is very hard for us to parse that information out.

Needless to say, the red line, which the red column would be U.S. and blue would be Japan lines,

show the overall trend in collective dose per megawatt-year. At .82 person-millisieverts megawatt-year, the estimated STP 3 and 4 dose per unit would be approximately one-half the average 2008 U.S. BWR dose, which is 1.4, and a factor of four below the average 2008 Japanese BWR dose, shown on the far right of the chart.

The spike in the collective dose in 2002 and 2003 in Japan was due to numerous reactor recirculation pipe and shroud inspection repairs in the BWR plants there.

So, our conclusion is that, as documented in the SER, this verifies that the radiation protection measures incorporated in the ABWR, and as described in the STP 3 and 4 COLA, will provide reasonable assurance that the occupational doses can be maintained ALARA and below the limits of 10 CFR 20 during all plant operations.

In addition, the estimated annual occupational dose will be lower than the current U.S., Japanese, and international operating averages.

CHAIRMAN ABDEL-KHALIK: Good.

MR. ROACH: Any questions?

(No response.)

MR. EUDY: If there are no questions, we would like to give South Texas the opportunity, if they

had anything to add to that.

MR. CHAPPELL: We have one slide, which you have as a handout.

We have previously received information from Tokyo Electric regarding the outage doses at Kashiwazaki-Kariwa 1 through 7. What is shown up here are averages over a specified time, six years. What is important to note is that K1 through K5 are BWR 5 plants; K6 and 7 are ABWR.

So, this shows a marked lowering of the dose during outages over this timeframe for ABWR, which is attributed to improved design, maintenance practices, and chemistry controls. This is the data point that supports, I think, the conclusions that the staff has.

VICE CHAIRMAN ARMIJO: In some of that experience of the Japanese, it was with all the repair work they had to do as a result of IGSCC. In the case of South Texas, I think you may have told me before, but are you going to implement the hydrogen water chemistry to minimize IGSCC risk. Is that part of your plants?

MR. TOMKINS: Yes, sir. Some form of hydrogen water.

VICE CHAIRMAN ARMIJO: Some form?

MR. TOMKINS: Yes, sir.

VICE CHAIRMAN ARMIJO: Okay. And do you know if K6 and K7 have that feature or are they just -- just a curiosity from my --

MR. CHAPPELL: I have no idea at this time.

MR. TOMKINS: I'm being told they don't.

VICE CHAIRMAN ARMIJO: I've heard that, but I just wanted something from somebody who knows.

MR. TOMKINS: Okay, and we have someone --

VICE CHAIRMAN ARMIJO: If you could find out, I would appreciate it.

MR. TOMKINS: We will have someone who can speak to that up here in just a second.

VICE CHAIRMAN ARMIJO: Okay.

CHAIRMAN ABDEL-KHALIK: Okay. Please proceed.

MR. EUDY: Okay. We'll move on to the final ACRS action item that we plan to present regarding the GALE code and uncertainty of effluent releases. Steve Schaffer, our technical expert, will lead us through that discussion.

MR. SCHAFFER: Good morning.

Before I start, there was actually another question that the Subcommittee raised. We are in the process of updating our new codes. They wanted to know,

what would be the impact of the update on STP? The simple licensing answer is none. We hold the applicants to the codes and guidance that are in place six months before the application is made.

From a technical standpoint or a scientific standpoint, that is not a very satisfying answer, and we knew that. About three years ago, we started on an effort to update the codes, but, also, an effort, because we knew most of the applications that we get in both for certified designs and for COLAs will begin before we update all our computer codes. So, we have to use the old codes. So, we wanted to answer the question, well, how long could we be by using the new codes -- I'm sorry -- the old codes on the new plants?

So, what I am going to address today is the GALE code, the GALE86 code, which is the code that we use to calculate the effluent releases for liquid and gaseous radionuclides, and how that would apply to the newer designs, and how long we can be by using these older codes for the newer designs.

Next slide. I think, is there one before that? Yes, okay.

So, we wanted to answer two questions. First, we wanted to look at the structure of the old code. Would

the structure of the old code, the algorithms, the equations, that we used really fit the new designs? And then, we also wanted to answer the question as to how accurate the GALE86 would predict the releases from the new plant.

Okay, I guess we go to the next slide.

We looked at the structures and the algorithms. There's two major components to the GALE code, one that calculates the coolant concentrations, the primary coolant in the BWR case and the primary and secondary in the PWR case.

The way GALE calculates that is really using the approach that is in ANSI 18.1. The GALE86 version uses an older version of this code. There is now an updated version, updated 1999. When you compare the concentrations that are in the ANSI standard between now, the '99 versus the old '86 code, there are a few changes, most of them to lower the concentrations. There's also some adjustment factors, depending on the power levels that you can apply that the standard recommends to using. Those adjustment factors also indicate that the coolant concentrations for the new plants would actually go down compared to the old code.

Then, we also looked at how the code calculates the waste management aspects for the liquid and gaseous

streams. We reviewed all of the new designs, the waste management systems of the new designs, and the new designs are, basically, just variations of the same practices that we are doing right now. So, the bottom line is that the structure and the algorithms of the GALE code are still okay for the new designs right now.

Now, before we go to the next slide, the next question is, well, how active is the GALE code? So, we said, well, why don't we benchmark the actual effluent releases to the results of the GALE code? So, obviously, we don't have new designs to compare them to.

So, what we did was we thought that, because the current operating fleet, if we look at the recent releases that are reported in the current operating fleet, that sort of reflects the advances in the fuel, the advances in the coolant chemistry, and the advances in the waste management technology and practices. So, the current operating fleet and their present annual releases probably is the best surrogate that we have for benchmarking the code to.

So, we looked at the annual effluent releases and compared them to the GALE codes that were calculated in the updated FSARs. We found six BWR plants and eleven

PWR plants that had all the information that we could make the comparison to.

In addition, carbon-14 and tritium are a little bit different. They have embedded values in the GALE code which allows us to compare the effluent releases to the embedded values, as opposed to having to run the calculations, so we could look at a broader spectrum of plants.

All right, we will go to the next slide.

What we found was that the GALE overpredicts most liquid and gaseous effluent releases by a factor of two, and in most cases, an order of magnitude or more. That "more" is more like more; it could be a factor of 100 to 1,000.

In addition, we found that the GALE predictions, the GALE86 predictions, for tritium and carbon-14, which are important radionuclides to the dose, are reasonably accurate.

I guess I will entertain any questions. That sort of ends the presentation.

VICE CHAIRMAN ARMIJO: Were there any significant underpredictions?

MR. SCHAFFER: If you look at it on a year-by-year basis, a plant-by-plant basis, the numbers

are all over the place. One plant in one particular year could significantly be underpredicted by the GALE code, and then next year be significantly overpredicted by the GALE code.

The purpose of the GALE is to look at long-term averages. When you look at the long-term averages, that's the results that I am presenting.

VICE CHAIRMAN ARMIJO: Okay.

CHAIRMAN ABDEL-KHALIK: Any other questions?

MEMBER SIEBER: This sort of assumes that the GALE code is not very accurate. Is there anything better or more sophisticated under development by anybody?

MR. SCHAFFER: Yes. In fact, part of this effort that we started three years ago was to develop, to update the GALE codes. If you remember in our discussions last meeting, the GALE, a lot of the parameters in the GALE code are based on operating experience and empirically-derived.

So, we have taken a close look at the present-day operating experience and have adjusted the GALE code. We have also imported the newer ANSI standard for the coolant concentrations and the adjustment factors there. We have also made it user-friendly, Windows-based.

We are testing it right now, and it should probably be out within a year.

MEMBER SIEBER: Does that mean that the answers are sort of code-specific? If it is derived from operating experience from old plants, now you've got to apply it to a new plant; you don't get the right answers by a factor of 10 to 1,000. Does that mean that the algorithms that you use to model the old plant don't fit the new plant very well?

MR. SCHAFFER: No. The algorithms fit. It is the parameters that you put into the algorithms which were based on the operating experience that would make you to overpredict the releases.

MEMBER SIEBER: Okay. Thank you.

CHAIRMAN ABDEL-KHALIK: Any other questions?

(No response.)

MR. EUDY: If there's no more questions, South Texas, maybe they didn't have anything to add to this discussion.

MR. HEAD: Looks like we are using a conservative analysis.

(Laughter.)

CHAIRMAN ABDEL-KHALIK: We will proceed with

the next item on the agenda.

MR. TONACCI: Dr. Abdel-Khalik?

CHAIRMAN ABDEL-KHALIK: Yes, sir?

MR. TONACCI: Can I just kind of run through these open items, so I understand which ones have to come back?

Obviously, the Part 21 needs to come back.

CHAIRMAN ABDEL-KHALIK: Right.

MR. TONACCI: The other one on fuel topical reports, we understand the Committee will choose which ones they want to hear in the future. But, as far as that action item for ABWR, that is closed?

CHAIRMAN ABDEL-KHALIK: Right.

MR. TONACCI: And the one on Japanese occupational dose, is that closed as well?

CHAIRMAN ABDEL-KHALIK: Yes.

MR. TONACCI: And the one we just heard on GALE code, I assume that is closed as well?

CHAIRMAN ABDEL-KHALIK: Yes.

MR. TONACCI: Thank you.

We also had one on temperatures, which will be presented as part of Chapter 8 and in the future as part of Chapter 9.

CHAIRMAN ABDEL-KHALIK: Yes, Maitri?

MS. BANERJEE: Maitri Banerjee, ACRS staff.

I thought I heard that STP will get back to the Committee on K6's and K7's use of hydrogen water chemistry.

VICE CHAIRMAN ARMIJO: Just a confirmation, yes, from today's meeting, you know. Do K6 and K7 use hydrogen water chemistry of some form or not?

MR. HEAD: We are getting ready to give you some perspective on that in just a second.

MS. BANERJEE: Thank you.

CHAIRMAN ABDEL-KHALIK: Who is next here?

MR. EUDY: Are we going to discuss the Japanese --

MR. HEAD: Yes, we are getting ready to do Chapter 5, but before we do that, we will answer the hydrogen water chemistry.

CHAIRMAN ABDEL-KHALIK: Okay, please go ahead.

MR. DALEY: Good morning. My name is Tom Daley. I'm the Mechanical Engineering Group Supervisor for STP 3 and 4.

As way of background, I have been here for three years. Prior to that, I had the same position for Stone & Webster on the Lungmen Project in Taipei, also

an ABWR. Over 25 years of working with Sargent & Lundy. I have had the opportunity to work in Korea for over five years as manager of the Ulchin 3 and 4 and the Younggwang 3 and 4 projects. Those were combustion engineering 80 system NSSS. Site Engineering Manager at the Zimmer Project before it became a fossil plant, and I'm Project Engineer on one of the last projects to obtain a construction permit.

Prior to my civilian profession, I was an engineer officer on a nuclear submarine, have got a BSME from the Naval Academy, an MSME from Naval Post-Graduate School, and an MBA from the University of Chicago.

I'm a registered professional engineer in six states and, hopefully, this conference will be a couple of CEUs that will help me maintain those licenses.

Regarding hydrogen water chemistry, the Japanese don't feel that its use is warranted for the ABWR. They have upgraded the materials and the manufacturing processes on the ABWR. So, they have specifically stated that they don't feel that the use of hydrogen water chemistry is warranted.

They do use hydrogen water chemistry in some of their boiling water reactors, but, again, they don't feel it is necessary.

GE actually made that statement in the DCD as well, that they don't feel that the use of hydrogen water chemistry is necessary. However, we have made provisions to use it.

VICE CHAIRMAN ARMIJO: Okay, but the South Texas Project doesn't share that view?

MR. DALEY: We have always had a concept of defense in depth.

VICE CHAIRMAN ARMIJO: Good.

MR. DALEY: We believe the literature supports that using hydrogen water chemistry, even in a limited amount, will reduce the possibility for stress corrosion cracking.

VICE CHAIRMAN ARMIJO: Well, the unfortunate thing is these improved materials in the highly-oxidizing core environment, in fact, do sometimes crack. So, the defense in depth is extremely valuable, a powerful tool to protect the plant.

MR. DALEY: Yes, sir.

VICE CHAIRMAN ARMIJO: Okay, thank you.

CHAIRMAN ABDEL-KHALIK: All right. At this time, we will proceed with the presentation on Chapter 5. We will begin with the presentation by the applicant.

MR. HEAD: We're going to present Chapter

5 at this time. It is pretty much the standard agenda for the presentation, and there are people in the room that could help us address, we hope, questions that could come up on this chapter.

I will turn it over to Coley now to go through some of the overall specifics.

MR. CHAPPELL: My name is Coley Chappell. I'm with the STP and with the Licensing. It is good to see you again this morning.

I will continue with our discussion to present Chapter 5 of the FSAR. This deals with the reactor coolant system and connected systems. There are sections in this chapter that also talk about the reactor coolant pressure boundary, how the design is, how it is maintained, and how it is monitored for any degradation.

One of the significant features in this chapter that we have alluded to before is our Tier 1 departure, which replaces the reactor cooling pump with a new design. For a discussion on this topic, I will turn the presentation back over to Tom Daley.

MR. DALEY: We feel that the improved monoblock design is a definite improvement in the type of pumps to use in the ECCS over the typical Terry Turbine-type pumps that have been used in the past.

The pump itself is water-lubricated. So, it eliminates the oil lubrication system. It uses inner-stage water for shaft sealing. It has an integral governor speed control system, which eliminates the need for a bypass line that it typical on Terry Turbine-type systems.

It exhausts directly to the suppression pool. Any steam condensation prior to startup is collected in a separate tank and pumped to the condenser. So, it eliminates the need for a barometric condenser.

So, when GE first suggested this pump, we were very much in favor of doing that. It is used on a number of auxiliary feedwater system applications overseas and, also, planned to be used on the Lungmen Project. So, we feel it is a definite improvement, and that is why we decided to go with it.

VICE CHAIRMAN ARMIJO: Is there any operating experience on BWRs using this pump?

MR. DALEY: No, not on BWRs. This will be -- well, they are planning on using it on Lungmen, but there's no operating BWRs right now.

VICE CHAIRMAN ARMIJO: So, at Kashi it was actually 6 and 7 and the other ABWRs in Japan still use the old Terry?

MR. DALEY: That is correct.

CHAIRMAN ABDEL-KHALIK: John?

MEMBER-AT-LARGE STETKAR: I think, if I recall, if I counted up actual turbine-driven pumps, there's a listing in an appendix to a technical report. I think I counted 18 of these things installed in operating plants. Does that sound correct? I mean there's some on order. But I think there are 18 of them out there.

I grew up with Terry Turbine-driven aux feedwater pumps. What's been the operating experience with these things? Overspeed trips on startup is the thing I am interested in.

You know, I recognize you've got an integral governor and all of that kind of good stuff, but the fact of the matter is the governor valve is fully open and it has got to kind of snatch when the steam hits it, the same as the Terry Turbine. So, what's been the operating experience on those?

MR. DALEY: Well, we haven't gotten any direct feedback from any of the operating stations. However, we have talked with the manufacturer. We have had a number of presentations. He tells us this --

MEMBER-AT-LARGE STETKAR: Oh, yes, he's going to tell you that the experience would be worse.

(Laughter.)

I would kind of be interested to see what the operating experience might have been in terms of, in particular, the thing that the Terry Turbines traditionally have been susceptible to is the overspeed trip on a startup.

But, with respect to that, a couple of other questions about not so much the turbine internal design, but I know you've got electrical and mechanical overspeed trips on the turbine. If it trips out on mechanical overspeed, do you have to locally reset the trip valve? I read that it's got a motor-operated, you know, a standard motor-operated reset for the electrical trip. But if it is a mechanical trip, you have to locally reset it?

MR. DALEY: I believe that is the case. You've got a similar type of a rachet sort of a thing that you have to operate.

MEMBER-AT-LARGE STETKAR: I notice that, because you have this now new pump, that the steam supply line design has been changed to remove the full bypass valve around the steam emission valve that used to give it kind of a little slower --

MR. DALEY: Right.

MEMBER-AT-LARGE STETKAR: -- startup. Also,

with respect to the existing installed pumps, do you know whether they have also removed that bypass line, that they only use a single steam emission line or --

MR. DALEY: Yes, sir, as far as I know --

MEMBER-AT-LARGE STETKAR: Because that is outside of the pump supply.

MR. DALEY: Right. And you are right, it looks like it doesn't have quite the same feedback. It is a direct feedback system on the governor, and the startup is much more controlled.

MEMBER-AT-LARGE STETKAR: It still has to respond, though, to --

MR. DALEY: It still has to respond.

MEMBER-AT-LARGE STETKAR: -- the initial, when the steam emission valve comes, the real steam emission valve comes open, it still has to respond to that initial pressure pulse.

MR. DALEY: Right, it does have to control it. I mean it opens, and it has got to shut a little bit in order to control the steam.

MEMBER-AT-LARGE STETKAR: Right, right.

MR. DALEY: But I'm not aware that, as far as I know, this design eliminates the necessity for that bypass line. So, the other designs --

MEMBER-AT-LARGE STETKAR: I mean, if the governor works good, yes.

MR. DALEY: Right.

MEMBER-AT-LARGE STETKAR: And one last question, and this is sort of a system question. Is the RCIC system -- I didn't get a chance to read through all of the controls and system operation. I understand that the system is supposed to be able to handle cooling for a nominal eight-hour station blackout period. Is this RCIC system designed to cycle on and off from low level to high level to low level in the vessel? In other words, it is an on/off system? And if so -- well, is it?

MR. DALEY: It has two levels of speed control. I guess you would call it three if you call stop, but I'm not aware that it actually cycles off if the water level goes --

MEMBER-AT-LARGE STETKAR: Well, it has got to have a high-level trip on it. I was just curious whether it was trying to control flow as a function of -- does it have a level control system or is it just an on/off level 8 to level, whatever it is, 1 or 2, or something like that?

MR. CHAPPELL: It's a simple control. I mean

it maintains flow at approximately 800 gpm, and it will initiate a flow level and, then, high level --

MEMBER-AT-LARGE STETKAR: Once you get up to level 8, it will trip off and then it will come back on at level 1 or 2, or whatever the second one is?

MR. CHAPPELL: Correct.

MEMBER-AT-LARGE STETKAR: Do you have any idea how many times in an eight-hour period it might cycle on and off?

MR. CHAPPELL: I do not.

MEMBER-AT-LARGE STETKAR: That would be interesting to know that. That sort of gives the number of times that good governor system has to respond to the steam transient.

CHAIRMAN ABDEL-KHALIK: How would you go about getting that information?

MR. HEAD: Well, I am going to ask Bill Stillwell to step up and answer at least part of the question.

MEMBER-AT-LARGE STETKAR: I knew I would drive Bill up here.

(Laughter.)

MR. STILLWELL: Good morning. My name is Bill Stillwell. I'm the PRA Supervisor for STP 3 and

4.

I will talk about the operating experience a little bit. Shortly after I joined the STP 3 and 4 project, we found out we were going to monoblock design. Fortuitously, about six months prior, we had a site visit from the Koreans. They said, "If you ever need anything, let us know." So, when we found we were going to monoblock, I wrote them a letter and said, "Do you have any operating experience?"

We got a nice letter report back that gave us operating experience for two of the sites, two of the units. They said they didn't have enough operating experience to be comfortable giving us more data, but the indications were the failure rate for start is about the same, but it is limited to the two units. They had about eight years' worth of experience.

MEMBER-AT-LARGE STETKAR: So, it is still kind of --

MR. STILLWELL: They feel, based on what they are seeing at the other units, that it is going to trend out. It seems to be a more reliable design. What they are seeing is the running failure rate is decreasing, and the maintenance unavailability is significantly different.

MEMBER-AT-LARGE STETKAR: Yes. The running failure rate makes a lot of sense with a simpler governor.

MR. STILLWELL: So, that is what we have for operating experience, and it is based on what I believe it is Kari gave back to us. That sort of an unofficial letter report. But if you want to look at it, we can --

MEMBER-AT-LARGE STETKAR: No, but if it is limited --

MR. STILLWELL: Yes, it is limited, and we have not updated since 2007.

MEMBER-AT-LARGE STETKAR: Anything on the number of cycles in a --

MR. STILLWELL: Number of cycles, it kind of depends on the number of SREs that are opening and what your decayed heat is --

MEMBER-AT-LARGE STETKAR: Yes, but, I mean, you've got to go boil water to figure it out.

MR. STILLWELL: You have to go boil the water and see what happens. I'm not sure that we have done that or that it was done as part of the original PRA. We have not done it yet.

MEMBER-AT-LARGE STETKAR: You haven't done it yet?

MR. HEAD: Have you got a follow-up question?

MEMBER-AT-LARGE STETKAR: Yes.

MR. HEAD: Okay.

MEMBER-AT-LARGE STETKAR: Someday he's got to figure it out for the PRA anyway.

MR. HEAD: Yes, but we will attempt at the next meeting to answer that question. The question is, during an eight-hour station blackout --

MEMBER-AT-LARGE STETKAR: Yes, as I understand it, the nominal design for it is to be able to handle an eight-hour station blackout.

MR. STILLWELL: Station blackout with no coolant.

MEMBER-AT-LARGE STETKAR: Yes. And as long as it is a cycle on/off design, I would be interested to know how many times during that eight-hour period --

MEMBER SIEBER: How many opportunities for failure?

MEMBER-AT-LARGE STETKAR: That's right. I mean, you know, the thing has got to start and stop, and the steam emission valve goes closed and comes back open again. It's got to work.

MR. CHAPPELL: There's a description in the technical report that talks about the design and the different flows that are required. The initial flow rate

under gpm is set so that it would inject at that level, and then --

MEMBER-AT-LARGE STETKAR: Initially.

MR. CHAPPELL: -- it would reach level 8. Then, it lowers to the lower flow, the 400 gpm, subsequently, to that, to match the decay heat. So, then, that would prevent it from just maximum injecting and cycling. It would lower flow rate to reduce the number of cycles.

MEMBER-AT-LARGE STETKAR: To reduce the number of cycles, but it should still -- it may cycle, if you are just controlling a fixed flow rate.

MR. HEAD: Out at 7 or 8 out there --

MEMBER-AT-LARGE STETKAR: Yes.

VICE CHAIRMAN ARMIJO: What are the backups? I mean, this looks like a very simple, straightforward, less-complicated pump, but what's a backup if it failed or tripped on startup when you really needed it? I guess it is more of a system safety analysis question.

MR. DALEY: Well, the back-up valve, of course, we've got other -- assuming we are in a station blackout operation, the backup to that system would be the AC-independent water addition system, which uses the diesel-driven fire pump and attaches, and it is attached to the RHR system or low-pressure core flood system.

So, that would be the backup to this system.

VICE CHAIRMAN ARMIJO: But there is only one RCIC pump, right?

MR. DALEY: That's correct.

CHAIRMAN ABDEL-KHALIK: Mr. Eudy, did you want to make a comment?

MR. EUDY: Yes, just a recommendation for procedure. For follow-up items, if you all could help us differentiate who's got the ball, if it is going to be staff or --

CHAIRMAN ABDEL-KHALIK: I think, in this case --

MR. EUDY: Since last time, we were kind of, "Is that yours? Is that mine?" What are the expectations? I think that would help us.

CHAIRMAN ABDEL-KHALIK: All right.

MR. HEAD: So, we're all agreed this one is ours?

CHAIRMAN ABDEL-KHALIK: Yes, sir.

MR. HEAD: Okay. Thank you.

CHAIRMAN ABDEL-KHALIK: Please proceed.

MR. HEAD: Okay. Any other questions on the pump at this point?

(No response.)

Okay.

MR. CHAPPELL: All right, in addition to the process cooling Tier 1 change, there are some other Tier 1 changes that are referenced in this section. Those are typically consistency changes, for example, and there is no intent to discuss those any further than what we have discussed at the last session.

The departures that are presented in this chapter include some Tier 2 changes, which improve system performance or availability or correct some details or inconsistencies in the Tier 2 information.

One of the departures that I want to mention is Standard Departure 5.4-5. This is an example of using ABWR and BWR operating experience in Japan. This is an additional vent line from the reactor water cleanup head spray that connects it to the vent line on the head. This prevents hydrogen accumulation in the line. The departure identified this concern and installed this additional line with some changes to the figure in Tier 2.

COL license information items in this chapter have been addressed. In general, we are going to establish ISI, PSI, IST programs. We also have identifications of ensuring that our reactor coolant pressure boundary

integrity is maintained by establishing tech specs and procedures that would allow operators to identify and take appropriate action for any known leakage.

We have information related to the vessel material that we have provided, starting approximately at the time when the vessel is onsite. We have information on fracture toughness, and then, this continues on through development of plant-specific pressure-temperature limit support, which will provide a methodology for curves.

Also included in this chapter is the analysis which we were just talking about for station blackout, which includes the two systems, RCIC and the backup, which is the AC-independent water addition supported by ADS.

ITAAC, impacts of ITAAC associated with this chapter are very minimal. For example, that of the RHR system for augmented fuel pool cooling. So, we added that requirement for that subsystem.

CHAIRMAN ABDEL-KHALIK: Before we go a little too far, I had a question about the lead factor for the surveillance.

MR. CHAPPELL: Yes.

CHAIRMAN ABDEL-KHALIK: In one section of your Chapter 5, you say that the lead factor is

approximately somewhere -- it was changed from 1.2 to a range of 1 to 1.5.

MR. CHAPPELL: That is correct.

CHAIRMAN ABDEL-KHALIK: And in another section, you specify that it is exactly 1.1.

MR. CHAPPELL: I believe it says approximately.

CHAIRMAN ABDEL-KHALIK: Right. So, I guess you feel that these two statements are consistent in a sense that 1.1 is bounded by the range that you give in the earlier statement that it is between 1 and 1.5?

MR. CHAPPELL: When we responded to an RAI, the change in the range from -- it initially said 1.0 to 1.5. We responded and clarified that it needed to be above 1, was the requirement. So, we have the range is above 1 to approximately 1.5. That is the range. Then, setting the approximate value at 1.1 is consistent with that range and is closer to that lower end.

CHAIRMAN ABDEL-KHALIK: Okay. Thank you.

MEMBER BROWN: Before you leave that, under the testing of main steam isolation valves, you had noted that you were testing, before you concur in your initial test program, under operating conditions. Here's my question: I have looked, didn't really find, was there

periodic testing done on these subsequent to this initial test program?

MR. CHAPPELL: Those are isolation valves, so they will fall under the isolation testing program.

MEMBER BROWN: Is there a periodicity with that?

MR. CHAPPELL: Yes.

MEMBER BROWN: I mean failure on surveillance testing and everything else, there's a whole list of things that are done periodically. I just never did find the one on main steam isolation.

MR. CHAPPELL: Those would be covered under surveillance, tech spec surveillance and IST testing.

MEMBER BROWN: Okay, but I didn't find it. Do you know, is that a five-year period? Is that a one-year? Is it 92 days? All these numbers that get thrown around over surveillance, what is this one for the isolation valves?

MR. CHAPPELL: I understand you question. I don't have the specific periodicity.

MEMBER BROWN: Okay. I mean, if somebody saw that one, I missed it. I was unable to find the periodicity on that one. I looked.

MR. HEAD: We will take that as a followup

and maybe, by that Chapter 16 discussion of the tech specs, we might --

MEMBER BROWN: Okay. Yes, that's where I was looking.

MR. HEAD: We might not be able to answer that one.

MR. CHAPPELL: But, generally, to address the concern, there's testing, an initial test program. There's also an ITAAC associated with this.

MEMBER BROWN: Yes, I understand that part of it.

MR. CHAPPELL: Of course, we will continue to test it.

CHAIRMAN ABDEL-KHALIK: Now, also, in the materials in the surveillance capsule section, you indicate that the vessel end-of-life neutron fluence is approximately 5 times 10 to the 17th. Where does this number come from? And what are the underlying assumptions for that number, given the fact that the third capsule is supposed to be taken out after a fluence not to exceed 5 times 10 to the 17th?

This is on your page 5.3-5 of the FSAR.

MR. CHAPPELL: Yes, I'm looking at the capsule program now. I don't have the basis for it.

I also understand the same numbers that you have, that you are looking at, and I think we have to probably take that as a follow-up item, to understand the basis for the fluence.

CHAIRMAN ABDEL-KHALIK: Right. I guess I understand that sometime down the road you may be applying for a power uprate or that you feel design will be different. The question is, when you say, "approximately," what does that mean? What's the error bar associated with that? Where do these numbers come from?

VICE CHAIRMAN ARMIJO: Yes, also, in calculating these fluences and also the pressure-temperature limits that you calculate, these are based on a GE7 core. So, when you get your real core that you are going to put into this plant, will you do all that over again, come up with new P-T limits --

MR. HEAD: Yes, sir.

VICE CHAIRMAN ARMIJO: -- and new fluence --

MR. HEAD: That will have to all be considered as the impact on that.

VICE CHAIRMAN ARMIJO: So, would there be some sort of an amendment that is provided to the staff? I just don't know how this --

MR. HEAD: If that needs to be changed, then

that would be a part of the amendment, that it comes with the fuel or the uprate.

VICE CHAIRMAN ARMIJO: Everything that is affected by the fuel change will be an amendment, including things like P-T limits, vessel fluence, as well as --

MR. HEAD: Yes, if they are impacted either by that or the stuff that needs to be amended or needs an NRC approval, okay, would be covered by an amendment. Anything else, obviously, would be a 50.59, and I think between the fuel and the uprate, the NRC would be approving, reviewing and approving what was appropriate to those two changes.

VICE CHAIRMAN ARMIJO: So, maybe I should ask the staff. Do you expect to receive an amendment with all these, either confirming that the original numbers were bounding or telling you what the new numbers are going to be?

MR. DOWNEY: Yes, and their original fluence values, which they submitted with their pressure-temperature limit report, they actually provided a calculation note. That is reviewed by the Reactor Systems folks.

But what will happen after the pressure-temperature limit report has gone through its

review, and say some change happens that affects the fluence values or the ductility reference temperatures, or any of those inputs. Then, as long as the methodology doesn't change, they would still have to update all of their values and update all of their pressure-temperature limit curves and everything that is affected. That will come to the staff.

MS. BANERJEE: Identify your name, please.

MR. DOWNEY: I'm Steven Downey.

MS. BANERJEE: Thank you.

MR. HEAD: Yes, the PTLR does allow us more control and allow us to make the changes ourselves, and then inform NRC of those changes. As long as we stay within that methodology, that approach would be available to us.

CHAIRMAN ABDEL-KHALIK: But you will follow up and let us know where this number came from, what the underlying assumptions were for that number?

MR. HEAD: Yes, sir. We have a followup on the basis for the fluence number and I guess maybe the error bounds associated with it. I won't predict whether we can answer that by the tech spec discussion later today, but we will certainly give it a try.

CHAIRMAN ABDEL-KHALIK: All right. Thanks.

MR. RAY: Excuse me. If I may add some little more, I am Neil Ray with the NRC.

What happens in this case is, as several folks mentioned about PTLR, PTLR was allowed by Generic Letter 96.3. What happens is, instead of licenses every time change the limits, NRC allowed them, that you guys don't have to change the particulars and come to us for approval, as long as you go through the PTLR process.

The process has to be approved by NRC staff, and that process is quite detailed. For example, it includes the fluence calculation. It includes pressure-temperature limits, materializing approval. It includes, in the PWR case, it includes the PTS calculation. It includes a partial energy calc, all kinds of things.

They have to commit that every time they use this, withdraw a risk capsule, they have to obtain their P-T limits and inform NRC. Inform the NRC; it is not an approval again.

So, that is the process STP has accepted. So, they submitted the PTLR to us, and we are currently in the review process.

CHAIRMAN ABDEL-KHALIK: Okay. Thank you.

If you go back to the previous slide, I just

had, actually, maybe even farther back, slide No. 6, I sort of have a generic concern reading through all your documents about the system of units you are using throughout.

So, in this case, for example, you are talking about megapascal gauge. The question is, are you using a consistent set of units in all your documents that is also the same units that will be used in control room instrumentation that is used in your operating training?

It seems to me that I'm not sure what your current units training does, but I would imagine the people are sort of used to using British units, and the instrumentation is probably British units. My experience over the past four years is that one place where people make big mistakes is in units.

So, could you address this issue? What sort of system of units are you using throughout for this particular application? Is it consistent with what you are using at the other units?

MR. DALEY: Yes, we are using English units, both in the engineering and the construction and the operation of the units.

CHAIRMAN ABDEL-KHALIK: But that is not what your tech specs are written as? You know, that is not

the system of units that your tech specs use. I mean you refer to things in liters per minute or cubic meters per hour. To me, that is one potential source of big mistakes.

MR. HEAD: We'll answer the tech spec question when we have Chapter 16. Okay?

CHAIRMAN ABDEL-KHALIK: Okay, but how about answering the general question as to whether or not you have a consistent system of units that you are using in your documentation, in your control room instrumentation, in your training, et cetera? When did you address that question?

MR. DITTMAN: I'll address it.

CHAIRMAN ABDEL-KHALIK: Yes, sir.

MR. DITTMAN: This is Kyle Dittman. I'm Supervisor on I&C Design at STP.

The DCD or the COLA is in metric, but for controlling design and for operator training, and all that stuff, we are converting over to English units. So, we will be converting to a consistent use of English units. The DCD, we are converting that over, too. That will be converted over to English units.

CHAIRMAN ABDEL-KHALIK: So, how will that be reflected in your various chapters of the FSAR? Because,

currently, they are not in British units.

MR. CHAPPELL: That would be a 50.59-like change to include information that would update. Rather than do it now, we would make those consistency changes following COL. Currently, we have engineering documents that provide units in SI as well as English.

MEMBER BROWN: That is really an interesting one because I have to bring this up, because I watched the plant manufacturing stuff, and they ended up with drawings which had SI units on it. The actual requirements that they had to torque bolts to were English. They were side-by-side. The guys used the wrong one, and every bearing got white when they turned on the machine. I mean it just ground to a massive halt, created about a two-year delay.

I totally missed that. That is just beyond my belief that you would have mixed units in the various documents, and that you would keep it that way.

CHAIRMAN ABDEL-KHALIK: Is the staff at all concerned about this issue?

MR. CHAPPELL: Well, we are not keeping it that way.

MEMBER BROWN: I mean it just seems like it drags out. I mean it is going to be a while before

you get to conversion.

But I'm sorry to interrupt. Go ahead.

MR. CHAPPELL: No problem, no problem.

MR. WUNDER: We are now, yes, definitely yes.

(Laughter.)

CHAIRMAN ABDEL-KHALIK: So, I guess you indicate that you will handle this through a 50.59-type process to convert completely into British units? Is this sort of outside the scope of this review then?

MR. CHAPPELL: Well, we were talking about, as far as the FSAR is concerned, that is what that addresses. As far as the high-level engineering documents that would contain certain values, right now I don't think that we have one set of numbers for one particular system in those high-level engineering documents. But when the specific procedures are developed, then we will certainly take into consideration the concern that the person doing the action has one clear path forward and clear instruction. So, that is a very important point to remember moving forward.

CHAIRMAN ABDEL-KHALIK: I think it would be a good idea to have a followup as to how you are going to address this concern in a general sense.

MEMBER SIEBER: It actually has to go a lot deeper than just the documents, your licensing documents. It has to go to every document, manufacturing, operations, maintenance. There's tons of opportunities to make mistakes.

CHAIRMAN ABDEL-KHALIK: Yes. I think, as I said, over the past 40 years, the majority of the big problems I have seen are units-related. So, let's try to get this straight.

MR. HEAD: Okay. We will present this as a topic in more detail at the next ACRS briefing.

CHAIRMAN ABDEL-KHALIK: Thank you.

MR. EUDY: Staff will do the same.

CHAIRMAN ABDEL-KHALIK: Thank you.

So, please proceed. Sorry to interrupt.

MR. CHAPPELL: No problem.

So, I am back to the slide that discusses ITAAC, the changes to the ITAAC, simplification of RCIC. Also, we have the additional loop of RHR that provides the cooling. There are a number of other ITAAC that are associated with reactor coolant pressure boundary, but there were no changes to those. Those include, for example, the recirc system and the reactor water cleanup system, but there were no changes to those.

MEMBER-AT-LARGE STETKAR: Coley, just a point of information, I have to admit to not doing all of the homework I should have done. You mentioned an additional loop of RHR that provides cooling. It is not a whole new RHR loop, is it? Or is it?

MR. CHAPPELL: It is an additional loop of RHR that is providing supplemental or augmented fuel for cooling. The DCD design had only two.

MEMBER-AT-LARGE STETKAR: Thank you.

MR. CHAPPELL: We have added a third for maintenance flexibility.

MEMBER-AT-LARGE STETKAR: Thank you. Thanks. That's all I need.

MR. CHAPPELL: Thank you.

MEMBER-AT-LARGE STETKAR: I misunderstood what I had read. So, thanks.

MEMBER SIEBER: There's some of that in other areas, too.

MR. CHAPPELL: No, there is not an additional loop. It is just an additional mode for one of the three existing loops.

MEMBER-AT-LARGE STETKAR: Okay, that is what I understood, that originally, if I looked at the DCD, I could count three RHR pumps, and there were two

connections --

MR. CHAPPELL: Right.

MEMBER-AT-LARGE STETKAR: -- for this auxiliary cooling. Now there are three connections?

MR. CHAPPELL: Three connections.

MEMBER-AT-LARGE STETKAR: Okay.

MR. CHAPPELL: Yes.

MEMBER-AT-LARGE STETKAR: Thanks.

MR. CHAPPELL: Right.

MEMBER-AT-LARGE STETKAR: So, it is not a new RHR loop? It is an additional connection to an existing RHR loop?

MR. CHAPPELL: It is not a new RHR train.

MEMBER-AT-LARGE STETKAR: Okay.

MR. HEAD: It is just hooking up the third --

MEMBER-AT-LARGE STETKAR: It's hooking up the third one for this cooling? That's what I thought I understood, but I had seen it kind of presented as a new RHR loop, and you talked about it that way.

MR. HEAD: "Loop" is the wrong --

MEMBER-AT-LARGE STETKAR: Never mind. Thanks. Okay.

MR. CHAPPELL: That covers the material for Chapter 5 that we want to look at.

CHAIRMAN ABDEL-KHALIK: All right. At this time, we can move to the staff's presentation on Chapter 5.

I understand that the Chapter 5 presentation has a closed part to it?

MR. EUDY: We have the availability of it. The staff does not have a presentation that contains anything proprietary.

CHAIRMAN ABDEL-KHALIK: Okay.

MR. EUDY: But if something does come up, we will rely on South Texas to let us know, or someone else, that we should move that to a closed session, if needed.

CHAIRMAN ABDEL-KHALIK: All right.

MR. HEAD: We will monitor that, but we had nothing proprietary in ours, and we weren't expecting to, either.

CHAIRMAN ABDEL-KHALIK: Okay.

MR. EUDY: Yes, we don't have anything in ours. They looked at ours and made sure that we didn't have anything proprietary in our presentation, which we don't.

CHAIRMAN ABDEL-KHALIK: Okay. Please proceed.

MR. EUDY: Okay. We will now begin the staff's presentation of the review of South Texas application with respect to Chapter 5.

We have several technical staff involved for the presentation today. I'm the Project Manager, Michael Eudy, and we will have Steve Downey, Tim Steingass, and Tom Scarbrough go through the various technical topics of interest, which there are several that I will briefly go through.

We are going to talk about reactor vessel materials. There were COL information items necessary for that.

We will go through the P-T limits information. There is an open item on the P-T limits curve. Pre-service inspection, pre-service and in-service inspection, we had some standard departures that affected that.

Reactor coolant pressure, boundary leakage, we have a COL information item and a departure with an open item, and we have updates to codes and standards and updates to code cases we will discuss.

And finally, we will to into the RCIC turbine design change, which is a standard departure that has some other open items that we will discuss.

Again, there is nothing proprietary in our

presentation. If we do have something, we will note that for the closed session.

I will turn it over to Steve Downey.

MR. DOWNEY: Good morning, Mr. Chairman and Committee members. I'm Steven Downey. I'm a Materials Engineer on staff with the Office of New Reactors, Division of Engineering, Component Integrity Performance and Testing Branch 2.

I will be discussing the first three topics, which are fracture toughness data, materials and surveillance capsule, and the pressure-temperature limits. They go in COL information item order.

Now ABWR CDC COL Information Item 5.4 states that the fracture toughness data based on limiting reactor vessel materials will be provided by the COL applicant. As the applicant stated, they responded that the fracture toughness data will be provided in an update to the FSAR one year after the receipt of the reactor vessel.

The staff finds that this is acceptable because it provides a reasonable assurance that the requirements of Appendix G to 10 CFR Part 10 will be met, and it provides the staff ample time to review the fracture toughness data prior to fuel load, just in case any issues may arise.

Next, with regard to the Materials and Surveillance Capsule Program, DCD COL Item 5.5 states that the COL applicant will identify the specific materials in each capsule, the capsule lead factors, the withdrawal schedule of each capsule, the neutron fluence received by each capsule at the time of its withdrawal, and the vessel end-of-life fluence.

To address the COL item, the applicant provided the information to meet those five topic areas in Section 5.3.4.2 of the FSAR. Also, in response to some RAIs related to the section, the applicant provided their complete reactor vessel surveillance program in a topical report, which they discussed in their presentation. And also, in FSAR table 13.4-201, the applicant provided the implementation milestone of the reactor vessel surveillance program, which will be implemented prior to fuel load.

Based on the staff's review of all the information provided by the applicant, the staff found that the reactor vessel surveillance program was in accordance with ASTM-E185, the 1982 revision, and it is also fully described, the reactor vessel surveillance program is fully described in accordance with SECY 05-0197.

And the resolution of being in accordance

with these two, the surveillance program is in accordance with, meets the requirements of 10 CFR Part 50, Appendix H.

Next slide.

Now ABWR DCD COL Item 5.6 states that the COL applicant will submit plant-specific pressure-temperature limit curves, and to meet the requirements of 10 CFR, Appendix G, related to pressure-temperature limits, the applicant has decided to submit a pressure and temperature limits report, following the guidelines of Generic Letter 96-03, which provides seven technical criteria to be addressed in order to submit the pressure-temperature limits and the full methodology for their development.

The staff is currently evaluating the pressure-temperature limit report. We have been in constant contact with the applicant. We have submitted several RAIs related to the report, which, of course, the review isn't complete. That is why it is identified as an open item at this point.

Any questions?

(No response.)

MR. EUDY: Okay, we will ask Tim Steingass to come up and present the next couple of slides.

MR. STEINGASS: Good morning, everyone. My name is Tim Steingass. I'm the Lead Technical Reviewer for PSI and ISI Operational Programs. I'm a Materials Engineer in the Materials and Chemical Engineering Performance Testing Branch 2.

We will be talking about Section 5.2.4, Pre-Service and In-Service Inspection and Testing of the Reactor Coolant Pressure Boundary.

Section 5.2.4 addresses PSI and ISI of Class 1 components in the pressure testing boundary. The first departure that we looked at involved the design, the transfer from a GE design over to Toshiba.

The STD DEP vendor PSI/ISI program is based on ASME Section XI requirements, with Toshiba responsible for the RPV design accessibility to perform PSI and ISI examinations.

The COL applicant, however, was responsible for the remaining components, design accessibility, to perform PSI and ISI examinations. From this perspective, we found this acceptable because, in order for the plant to be robust during operation and find any issues that may evolve due to failure mechanisms, the design of the plant that preserves accessibility to enable the performance of ISI is the appropriate measure to take.

Therefore, the staff concluded that the design responsibilities meet ASME Section XI requirements for PSI and ISI examinations and were clearly designated.

VICE CHAIRMAN ARMIJO: When you say, "RPV design accessibility," I just read it that you mean RPV and internals and all the things that Toshiba would normally design?

MR. STEINGASS: Correct.

VICE CHAIRMAN ARMIJO: So, that is really their scope, to do that?

MR. STEINGASS: It is Toshiba's scope to design the vessel for accessibility.

To jump back to the DCD, the ABWR DCD was, of course, one of the first ones we have looked at and certified. The issue here involved the staff only approved the design of the RPV. It did not approve the design for the remainder of the Class 1, 2, and 3 components. So, therefore, when we looked at the ISI and the PSI programs, we had to look at the design for the remainder of the DCD as it applied to Class 1, 2, and 3 with the vessel already certified.

So, the DCD mix expressly states that accessibility will be maintained by Toshiba, and the accessibility and all the other components of an

operational program under a PSI and ISI environment will be maintained by the COL applicant.

VICE CHAIRMAN ARMIJO: I don't see how they can do it for the vessel internals and the other things you have to inspect.

MR. STEINGASS: I'm sorry, I didn't hear the question, the comment.

VICE CHAIRMAN ARMIJO: You know, I just don't understand. I may just be belaboring it, but the core internals, all of those components that have to be inspected periodically, the only people who can really control the design of that are the people who design the vessel and the reactor. I don't think STP does that.

MR. STEINGASS: I said that the responsibility for the design and the accessibility to enable the inspections is controlled by Toshiba.

VICE CHAIRMAN ARMIJO: Okay. Then I misunderstood.

MR. RAY: Excuse me. This is Neil Ray.

Let me clarify. I think what you are asking and his giving an answer is slightly different.

VICE CHAIRMAN ARMIJO: I guess I'm asking an engineering question.

MR. RAY: Yes. No, no, no. I understand

your question and he understands also.

What Tim says is, when you are talking accessibility of the vessel, we are talking about vessel inspection only. We are not talking about vessel internals. That is the difference here.

VICE CHAIRMAN ARMIJO: Okay.

MR. STEINGASS: Sorry about that.

VICE CHAIRMAN ARMIJO: That's okay.

MR. STEINGASS: That was from another project manager.

Let's see, continuing on, STD DEP 52-2, Examination Categories. Next slide, please.

The FSAR stated that pre-service inspection would extend to 100 percent of the Class 1 pressure-retaining wells and 100 percent of the Category B-O control rod drive housing welds, if it was incorporated into the design. In addition, the departure states that evaluations will be performed to assure accessibility to perform the ISI examinations.

The staff concluded that the departures met the requirements of Section XI and accessibility to perform the ISI examinations and were, therefore, accessible.

MEMBER SIEBER: But that just applies to the pressure boundary?

MR. STEINGASS: Say it again?

MEMBER SIEBER: That just applies to the pressure boundary?

MR. STEINGASS: That is correct.

MEMBER SIEBER: Not the core internals or anything like that? Okay.

MR. STEINGASS: Correct.

STD Departure 5A-1, Ultrasonic Examination of the RPV. The FSAR stated that the ultrasonic system for examination of the RPV would meet the requirements of ASME Appendix VII and VIII for qualification of personnel and equipment demonstration. The staff concluded that this departure met the requirements of ASME Section XI and 10 CFR 50 as acceptable. As you recall, the more recent version of 10 CFR 50 superseded the use of NUREG 1.150, and Appendix VII and VIII take care of that requirement.

Next slide.

Finally, there were no open items.

In the need to make things go a little bit quicker, I am going to pick up this one, Reactor Coolant Pressure Boundary Leakage Detection, Section 5.2.5.

Before I get going, are there any other questions on 5.2.4 for the Committee?

(No response.)

Okay. The reactor coolant pressure boundary leakage detection systems are designed to detect and, to the extent practical, identify the source of reactor coolant leakage. COL Information Item Conversion of Indicators is written to develop the surveillance procedures prior to fuel load to direct operators to convert instrument indicators to a common leakage equivalent.

Departure 7.3-12, Leak Detection and Isolation System Sump Monitoring, changes the unidentified leakage tech spec limit from 1 gallon per minute to 5 gallons per minute.

CHAIRMAN ABDEL-KHALIK: Could you give us the rationale for this change?

MR. STEINGASS: Do we have the technical reviewer here?

CHAIRMAN ABDEL-KHALIK: We can start with STP.

MR. STEINGASS: This is the way we decided to do it.

CHAIRMAN ABDEL-KHALIK: Okay.

MR. STEINGASS: Go ahead.

CHAIRMAN ABDEL-KHALIK: Please use the other

microphone.

MR. LI: My name is Chang Li. I'm the Technical Reviewer for Section 5.2.5, Reactor Coolant Pressure Boundary Leakage Detection.

I understand the question that you just asked is the reason why this changed from 1 gpm to 5 gpm leakage detection criteria. As a reviewer, I think this change is determined by the applicants. As a reviewer, we review, when that is changed, whether that is acceptable or not.

So, as to why did they changed it, I think the applicant should address it. On why it is acceptable, I should address that.

CHAIRMAN ABDEL-KHALIK: While you are at the microphone, why is it acceptable?

MR. LI: I think, according to our criterias in terms of sensitivities, we have a Reg Guide that is talking about sensitivity of 1 gpm. Actually, on the tech spec limit of unidentified leakage, 5 gpm, that was established, I think, in BWR System Standard Tech Spec for all the BWR systems. I don't know why ABWR, when they do design certification, they have a criteria more stringent down to 1 gpm per gallon within an hour, which is the criteria used for PWR. But the BWR was 5 gpm all the time.

So, in the design certification stage, they made that more stringent criteria. Certainly, we found it acceptable. Now, when they make this departure, change it to less stringent criteria, we have RAIs, ask questions. I believe the question that they pointed out as our acceptable, sensitivity criteria, with respect to Reg Guide 1.4.5, we have that 1 gpm in terms of sensitivities. So, their instrument is able to detect 1 gpm sensitivities, as they claim to.

But, as far as the tech spec, the Reg Guide doesn't have a criteria to specify. BWR operating experience, they indicate that the 5 gpm is more practical for them.

I had an extensive discussion when I did the review in the ESBWR because, at that point, it is the first time when I am looking from ABWR down to ESBWR, they changed to 5 gpm. Well, how come? So, you will be able to make it the 1 gpm, just like all the PWRs, and they changed to 5. So, we had a very extensive discussion at the ESBWR review stage.

Here, they are taking the same approach, the applicants, changing it from 1 gpm to the more relaxed of 5 gpm, which is all the BWR tech spec has.

CHAIRMAN ABDEL-KHALIK: Okay. Thank you.

Just a side question. The FSAR says that the limit is 19 liters per minute. So, when you did your review, did you have to pull out your conversion table to see whether or not this is reasonable? Or, you just knew right away that it was 5 gpm?

MR. LI: About 5 gpm, that was, I think, being used for all the BWRs in the tech spec.

CHAIRMAN ABDEL-KHALIK: Okay. That is not the question. So, let's just hear from the applicant as to the rationale for this change, given the fact that people are moving in the opposite direction, by and large.

MR. CHAPPELL: This departure took DCD limits that were based on another method for a leak 4 break, which is not an option, that STP 3 and 4 is using, implementing. So, we went with a more -- this is more in line with current operating experience, to make the unidentified leakage limit from 1 gpm to 5 gpm. Considering that 1 gpm is at the limit, that that is the requirement for the analysis, then, that provides a more reasonable input value to our tech spec limit.

CHAIRMAN ABDEL-KHALIK: Could you repeat that, please?

MR. CHAPPELL: I think we may have someone who wants to add to this.

MR. CASHELL: Good morning. My name is Steve Cashell, and I'm the Tech Spec Licensing Engineering.

We used IGSCC or non-IGSCC components. A lot of us went to great lengths to remove any precursors for IGSCC, because we knew we wanted these particular limits in our specifications. The BWRs all have gone to these limits, and so has the ESBWR for ease of operation.

And as Coley said, GE had put this in as an option, if we were to choose the leak-before-break option, to allow other benefits. We chose not to employ the leak-before-break option. If you go way back into history, if the leak-before-break option is not chosen, then these limits are apparently satisfactory.

CHAIRMAN ABDEL-KHALIK: Please proceed.

MR. STEINGASS: Okay.

CHAIRMAN ABDEL-KHALIK: Thanks.

MR. STEINGASS: To continue on with Departure 7.3-12, we just briefly went over the 1-to-5 gallon per minute change. Then, there was a change of the total leakage limit over 24 hours from 25 gpm to 30 gpm. In addition to that, there was an addition of an alarm limit to 2 gpm within a four-hour period to provide early warning prior to the tech spec limit. And finally, to develop procedures prior to fuel load to respond to prolonged

low-level RCS leakage.

As a result of this change, there is an open item for the applicant to submit a commitment to complete the above procedures and make those procedures available prior to fuel load.

CHAIRMAN ABDEL-KHALIK: The 30 gpm for both unidentified and identified leakage is a big leak. The question is, how does that compare with current tech specs for operating BWRs?

MR. CHAPPELL: It's consistent.

CHAIRMAN ABDEL-KHALIK: It's consistent?

VICE CHAIRMAN ARMIJO: What about the operating ABWRs in Japan? What is their tech spec for unidentified leakage?

MR. CHAPPELL: Steve may want to address the generic. It is not a direct reference to Japanese tech specs. I will turn it over to Steve to address that question.

MR. CASHELL: This is Steve again.

I do not know the Japanese limit. However, I know that the BWRs today are, every one is much more sensitive to leakage. A typical leakage of 4 gallons per minute, for instance, total leakage increases rapidly. Today the philosophy is find out what it is; shut down,

if you have to, and find out what it is quickly. No one today approaches the 30 gpm limit.

It's the 5 gpm unidentified that is the more difficult limit. The 30 gpm is easy to live within. It is the rapid increase. That is why we added the alarm of 2 gpm increase over the previous four hours. In other words, if we see something change rapidly, we get the alarm, and the typical action likely, if you get it, will be to shut down, even though that requirement is not there yet.

VICE CHAIRMAN ARMIJO: Yes, but the logic is kind of funny because you are implementing improved materials with very good fabrication practices, with hydrogen water chemistry to protect against IGSCC, but you allow more leakage, implying that as long as the leakage isn't from cracks in the pipes, we really don't care. So, it can leak from seals or some other.

You know, it may be the answer was 1 gpm is just not really tolerable; it's not practical. It is --

MR. CASHELL: That is the most restrictive, yes. That is the difficult limit.

VICE CHAIRMAN ARMIJO: Yes. If it is basically impractical to do it at 1 gpm, I could see

a logic to saying 5 gpm, but we are not really worried about the pipe cracking or pressure vessel leakage. But it just seems strange that it would be you would increase that tech spec limit, especially if you can find out from Toshiba what the K6 and K7 tech spec limits are, and if the Japanese meet 1 gpm, why can't we?

MR. HEAD: I want to mirror what Steve has said. These are tech spec limits. There's a significant difference between unidentified leakage and total leakage with respect to public health and safety.

From the operating experience, you know, leakage is something we react to, almost regardless of the limits. Those tech spec limits require certain significant actions for the plant. Long before that point in time, the station is reacting to it.

So, for us as a first-time evolution on this, using current industry limits we felt like is appropriate. Starting off with tech specs that are not in that condition would be I don't think appropriate at this point.

CHAIRMAN ABDEL-KHALIK: But the question is -- there are two questions that came up. Is the 1 gpm consistent or inconsistent with the sensitivity of your detection method?

MR. HEAD: Steve, just stay up there for

a while, would you?

(Laughter.)

MR. CASHELL: This is Steve again.

The major difference between the PWR and the BWR is it is very easy to collect your unidentified or a leakage in a PWR; whereas, for a BWR, it is a convoluted process where the water drains down and has to drain. So, collecting the 1 gpm to measure it is the problem for BWRs. That is why this, the 5 and 30 gpm, became the standard for BWRs. Instruments can detect it if you can collect it properly.

CHAIRMAN ABDEL-KHALIK: And the second question was, well, what are the tech spec limits for the Japanese plants? And have they been able to live within the 1 gpm constraint?

MR. HEAD: Okay. We will have to keep that as an open item because we don't have that answer today.

CHAIRMAN ABDEL-KHALIK: Okay. All right. Thank you.

Please proceed.

MR. STEINGASS: I have no more items with regard to 5.2.5. Unless there are any additional questions, I will turn it over to Tom Scarbrough.

CHAIRMAN ABDEL-KHALIK: Okay, thank you.

MR. SCARBROUGH: Tom Scarbrough in the Component Integrity Branch.

I'm going to talk about several sections. The first one is Section 5.2.1.1, and its compliance with 10 CFR 55(a). The STP FSAR incorporated by reference the DCD without departures or supplements. We looked at those references, and they were acceptable, except when we got to the In-Service Testing Program, it wasn't clear, in fully describing the I&C Program as an operational program, which OM code addition was going to be applied to the In-Service Testing Program.

In response to that, South Texas indicated that they would revise their table 1.8-21a to include ASME OM code 2004 edition in support of the ISC description for the COL application. And the 2004 edition of the OM code is incorporated by reference in the regulations, and therefore, acceptable. So, we have identified this as a confirmatory item in our SER.

Another section was Section 5.2.1.2, which are the applicable code cases. Once again, the STP FSAR incorporates the DCD by reference.

A standard departure, 1.8-1, indicated that a more recent Reg Guide 1.84, Revision 33, would be used for Section 3 code cases. But it didn't spell out

specifically which specific code cases were planned to be used for the In-Service Inspection Program, the In-Service Testing Program.

And in terms of meeting the SECY Paper 05-197 for fully describing their ISI and IST programs, we needed to know which code cases were currently planned to be used. So, both of those are identified as open items in the SER.

Now, for the In-Service Testing Program, we have had an audit with South Texas on their IST program. They are in the process of updating the FSAR, Section 3.9.6, which will spell out the specific code cases for IST that they plan to use right now. So, that will be taken care of very shortly.

Okay. So, that is the first of 5.2.1.2. Another portion of that is that South Texas clarified the use of annulled code cases. There was language in the DCD which talked about the use of annulled code cases. So, we asked for clarification of that.

And they indicated in their response that where it was specified, they used it as specified in the purchase order, where accepted by the supplier. That was consistent with 10 CFR 50.55(a) and (b)(4), (5), and (6), which talks about the use of annulled code cases.

Another topic in that section had to do with the use of code cases that are specified in FSAR table 5.2-1 related to code cases that are referenced or listed in Reg Guide 1.84, Revision 33.

There were a number of code cases that had been superseded or outdated. We asked that that table be updated to reflect the most recent additions of those code cases, and that is what they are planning to do right now. They have indicated where they are going to do. So, that is a confirmatory item as well. So, that is being taken care of.

Okay. So, that is it for those two sections. Now next is the 5.4.6, Reactor Core Cooling Isolation System, and here, as was discussed this morning with the Standard Departure 2 --

CHAIRMAN ABDEL-KHALIK: Excuse me. Would this be a reasonable time to take a break? This is a reasonable point to --

MR. SCARBROUGH: Yes.

CHAIRMAN ABDEL-KHALIK: -- since the remainder of the presentation pretty much deals with the --

MR. SCARBROUGH: Sure, sure. That would be fine.

CHAIRMAN ABDEL-KHALIK: Okay. Why don't we take a 15-minute break? We will come back at 10:35.

(Whereupon, the foregoing matter went off the record at 10:20 a.m. and went back on the record at 10:35 a.m.)

CHAIRMAN ABDEL-KHALIK: We're back in session.

Please continue.

MR. SCARBROUGH: Thank you.

I'm Thomas Scarbrough.

Next I was going to talk about Section 5.4.6, which is the Reactor Core Isolation Cooling System. As we heard this morning, there is a Standard Departure at T12.4-3, which talks about the new reactor core isolation cooling system turbine pump design. There was a proprietary Toshiba report which describes that new design.

Next slide.

Also indicated this morning, there are several key features of this new design, the monoblock design where the pump and turbine are within the same casing; there's no shaft seal required. So, they are both on the same shaft for the turbine and the pump. There is no barometric condenser required, which

eliminates the need to condense shaft steam leakage. So, that is not necessary anymore.

There's no oil lubrication. It is water-lubricated internally. There's no steam bypass line for the warmup because the system can handle the steam directly without the need to bypass some steam initially.

Then, there's less complex -- the system controls are simplified, so that there is a more prompt response.

So, those are some key aspects of the design.

MEMBER-AT-LARGE STETKAR: Tom?

MR. SCARBROUGH: Yes?

MEMBER-AT-LARGE STETKAR: The next-to-the-last bullet says, "No steam bypass line required for warmup." You said, well, because the system is designed to be able to handle the full-steam emission. I suspect, if I talked to Terry Turbine when they started installing their turbines back in the, whenever, seventies, they would have said the same thing. I mean people put in those bypass lines because they discovered that the turbines had a propensity to trip on overspeed on startup.

What kind of confidence do you have that this one doesn't do that?

MR. SCARBROUGH: Well, one interesting part that came up in your discussion this morning was the qualification for the pump. When we reviewed the topical report, it talked about seismic qualification and the environmental qualification, but it didn't talk about functional qualification. That was one of the key points of the audit, the result of the audit that we performed.

They are in the process now of revising the topical report to describe the functional qualification for this. Part of that process is going to be being able to start up without these trips, the start and stop that you talked about over the time period. Can it handle starts and stops over a long time period?

MEMBER-AT-LARGE STETKAR: Are they going to run a qualification program similar to diesels where they have to demonstrate that the thing starts a number of times successfully without tripping?

MR. SCARBROUGH: Yes. That is going to be its performance requirements. They are going to have to describe and demonstrate, and there is ITAAC related to type testing and such. So, we will be following this similar to the way we were following the squib valve designs for APWRs, AP1000s, is the need to have that functional qualification over the entire functional life

of the component.

So, yes, that is something, and I made a note of your point about to make sure that that is part of the qualification as we do the review for the starting and stopping and such, and the possibility that it could trip early, because I heard this morning that there are issues that maybe they might trip. Even though they are designed not to, maybe they're not --

MEMBER-AT-LARGE STETKAR: The old turbines were designed not to.

(Laughter.)

If you had talked to the designer, they would have told you they didn't trip.

MR. SCARBROUGH: So, that's important points that we will make sure that we look at during the qualification and review process.

MEMBER-AT-LARGE STETKAR: Well, the designer would tell you they aren't supposed --

MEMBER SIEBER: Aren't supposed to trip.

MEMBER-AT-LARGE STETKAR: -- aren't supposed to trip.

MEMBER SIEBER: Operators would tell you they do trip.

MEMBER-AT-LARGE STETKAR: That's right.

MEMBER BROWN: Just a question. Under qualifications, if you expect it to operate, stop/start over an eight-hour SPO period, I would expect a qualification program to establish a number of a series to say, okay, maybe we have an SPO, as we would expect. Let's test it for five or five three-hour periods and see that it never trips. In other words, it goes on and off throughout the eight-hour period and never goes off. That's what I would have done in my old program.

MEMBER-AT-LARGE STETKAR: Well, I think that's what Tom --

MEMBER BROWN: So, you would see that it actually operated for the entire eight-hour expected period as part of the qualification, without tripping as it had to cycle on and off. Is that the process?

MR. SCARBROUGH: Yes, sir. Their qualification is going to have to show that it can perform the function it is designed to perform. If their analysis shows that it has to start and stop several times over that time period, they are going to have to qualify it for that. So, they are going to have to demonstrate that. So, that will be part of --

MEMBER BROWN: Do you ever do an endurance test? I mean this thing is going to be there for 40 years

or longer. See how many of those cycles it could endure?

MR. SCARBROUGH: Well, typically, they do have a design where they have to show that they can handle whatever the number of challenges over life. I mean they are going to have to have that type of testing.

MEMBER BROWN: All right. Is that part of your design qualification? Is that a DAC-type --

MR. SCARBROUGH: It's not DAC.

MEMBER BROWN: It's not piping or I&C?

MR. SCARBROUGH: It will be an ITAAC or a type test ITAAC. They call them type test or type testing, but it is --

MEMBER BROWN: So, it is not an inspection item at the site though? This is a test that you do at the vendor --

MR. SCARBROUGH: Right, this would be a vendor pre-installation qualification, is what they will have to do.

And since it is a new design, we will definitely be paying more attention to it than if it was a standard design that had been used for years.

MEMBER BROWN: Okay.

MR. SCARBROUGH: It is like the squib valves; it will get a lot of attention.

MEMBER BROWN: Thank you.

MR. SCARBROUGH: The next slide.

Just kind of the history of what we did, we went out and took a look at the topical report initially to see what was in it, and we asked that it be submitted on the docket. They did that.

We prepared RAIs. Then, we performed an audit of the design and the RAI responses in November.

You can click on the next slide.

The results of those RAI responses and the audit, as I mentioned, the RAI response indicated that the RCIC turbine pump would be qualified in accordance with ASME Standard QME-1-2007, which we recently accepted in Revision 3 of the Reg Guide 1.100.

But the topical report doesn't specify any functional qualification requirement. So, that is something that we had asked them to go back and revise the topical report to address that.

Another area that we found was that there's a small non-safety-related pump that assists in shaft bearing lubrication during standby conditions. Since that standby condition needs to have lubrication, we indicated that we expected there would be a surveillance performed on that small pump to make sure that it is

receiving the lubrication that it needs, so that it will be ready to perform, if it is needed.

Also, we --

CHAIRMAN ABDEL-KHALIK: Excuse me.

MR. SCARBROUGH: Yes, sir.

CHAIRMAN ABDEL-KHALIK: Back to the issue of the functional qualification provisions, it is not a matter of just how they are going to do the functional qualification testing, but it is also a matter of defining what it is that they are required to demonstrate. For example, the number of cycles.

So, how is this checked during your review process?

MR. SCARBROUGH: Right. Well, the QME-1-2007 is a qualification process for mechanical equipment, for pumps and valves. In the section QP in QME-1, it indicates that you have to go through and set up whatever performance requirements for your component and set up your qualification process. So, they will have to go through and establish an actual testing program that satisfies QME-1, which covers all the performance requirements for this new RCIC turbine pump.

So, they will have to look at the start/stop issue, the overspeed issue. All of those performance

requirements will have to be part of developing this qualification testing program for this. Then, once they do that, as they get ready to do that, we will expect them to notify us that they are going to be performing qualification testing per the ITAAC. We will be able to go and do inspections of the ITAAC for the ITAAC of the qualification testing process.

CHAIRMAN ABDEL-KHALIK: But there is a step missing in what you are reviewing, which is reviewing whether or not the functional qualifications that they have been specified are, indeed, correct.

MR. SCARBROUGH: Yes, that would be part of the inspection process. Once they actually set up their qualification testing program, and we conduct inspections of that ITAAC as part of that, part of our review would look at, was the qualification testing program adequate to demonstrate that it will perform its design requirements?

CHAIRMAN ABDEL-KHALIK: Okay.

MR. SCARBROUGH: So, that is what we would be looking at that there. The QME-1 will tell them the process they have to establish for the qualification. Then, once they notify us that they are going to do the testing, we will be conducting inspections to look at

that, how they implement that. And if they missed anything, like, for example, the start/stop and overspeed, make sure those are all addressed as part of the qualification testing program.

CHAIRMAN ABDEL-KHALIK: Okay.

MR. SCARBROUGH: It has to be part of the QME QA program under Appendix B. It is also part of the IST program. It has to be covered under that. So, it has to be tested that way.

Also, as a result of the lessons learned -- we have had overflow-induced vibration over the years with boilers -- we did ask questions about how potential flow-induced vibration would be addressed. The DCD does indicate in Section 3.9.2 that flow-induced vibration needs to be addressed as part of design. And, also, during the startup test program under Section 14.2, there is specific monitoring that is done for the RCIC turbine pump to look for that. So, that is going to be addressed both in design and startup.

And we had two open items for this section. The first one had to do with the audit, and that they need to revise the topical report to address the functional qualification, however they want to do it. They don't have to use QME-1, but they have to describe that functional

qualification. Also, they need to specify surveillance testing for that standby lubrication pump. So, those are the two areas that are left open related to the audit.

Also, there's another open item related to the net positive suction head margin for the new ECCS suction strainer. They need to provide the results of those pump calculations, and the Systems Branch may be conducting an audit of those pump calculations, once we get the results. That might be done in the future. So, that is another area that the Systems Branch will be looking at.

I did want to mention one more thing. A question came up this morning about the main steam isolation valves, and where those are addressed in the periodic testing program, the I&C program. If you look in ABWR DCD Tier 2, table 3.9-8, on page 3.9-99, the main steam isolation valves are specified for stroke testing every three months for all eight of the main steam isolation valves.

Sometimes they will say, well, we can't do it during power operation because it might cause a plant trip. They don't have that currently in this ABWR DCD, but, as they develop their program, I mean this is a description. So, when they develop the program, they

might decide to indicate that it could cause a plant trip. So, they have a partial stroke during plant operation and a full stroke during a fueling outage. So, that is something that they can work out as they develop the actual program. But the MSIVs are listed in the I&C table for quarterly stroke testing right now.

MEMBER BROWN: That's in Chapter 16?

MR. SCARBROUGH: This is actually in 3.9, Section 3. It is 3.9 Section 3.9.6 is the IST program.

MEMBER BROWN: Okay.

MR. SCARBROUGH: And there's a table which lists every component pump and valve within the I&C program, and it is table 3.9-8. It goes on for 50 pages. It lists all of them. Then, they will update that as they actually develop the programs.

MR. HEAD: And that refers to the surveillance.

MR. SCARBROUGH: Right, surveillance for the site.

MEMBER BROWN: Yes, that answered my question. Thank you.

MR. SCARBROUGH: And that is all I had on Chapter 5.

MR. EUDY: In terms of chapter wrapup, due

to the open items and confirmatory items, staff cannot finalize conclusions on Chapter 5.

Are there any additional questions at this time?

CHAIRMAN ABDEL-KHALIK: Are there any additional questions on Chapter 5?

(No response.)

No.

MR. EUDY: May I take this opportunity to go over what I think some of the action items are and the questions?

CHAIRMAN ABDEL-KHALIK: Yes, please.

MR. EUDY: Okay, good.

CHAIRMAN ABDEL-KHALIK: Good.

MR. EUDY: One of the questions, I believe it was for both STP and us, and maybe it is more generic across the entire application, is the homogeneity or non-homogeneity of the units that are used in the documentation we are reviewing, and what their licensing basis will be. So, that is something we both have.

I believe we answered the question regarding staff expectations regarding PTLR, what we are going to review and how we are going to deal with that. Okay.

And I believe the question about the leakage

limits is down to a comparison of what we know with the Japanese experience. Is that more for South Texas?

CHAIRMAN ABDEL-KHALIK: Correct.

MR. EUDY: Okay.

MR. HEAD: Can I go back on the fluence or the PTR? Did that answer your fluence question?

CHAIRMAN ABDEL-KHALIK: No.

MR. HEAD: Or is there still a separate --

CHAIRMAN ABDEL-KHALIK: Correct, that's a separate -- you know, my understanding of your listing is a methodology which is undergoing review at this time.

MR. HEAD: Right, PTLR will be approved, but it won't be --

CHAIRMAN ABDEL-KHALIK: But there is a specific question as to the fluence.

MR. HEAD: Okay. All right.

MR. EUDY: So, those are the only ones I had. So, if South Texas would like to go over the ones that they have? Oh, sorry.

MR. RAY: This is Neil Ray.

Do you still have the question about 5 times 10 to the 17th?

CHAIRMAN ABDEL-KHALIK: Yes.

MR. RAY: Okay. The number generally comes

from ABWR DCD. This is a GE document. They calculated it based on their calculation and prediction. Using the GE fuel, that is the number. Since every ABWR DCD is already 35, STP specifically is using the same number.

And from the staff, we do not have any argument with that number because we know we have enough time to update the particulars and other associated reactor integrity issues.

So, that specifically answers your questions.

CHAIRMAN ABDEL-KHALIK: So, this number is consistent with GE 7 fuel?

MR. RAY: Yes, yes.

CHAIRMAN ABDEL-KHALIK: Whatever you are sort of incorporating by reference, and when the time comes for you to provide that amendment for the new fuel, you will come up with a new set of numbers?

VICE CHAIRMAN ARMIJO: Or confirm that that number is still valid?

MR. RAY: Yes.

CHAIRMAN ABDEL-KHALIK: Okay. That's fine. Thank you.

MR. HEAD: There was the main steam valve testing and --

CHAIRMAN ABDEL-KHALIK: That's closed.

MR. HEAD: Okay. So, we have the station blackout --

CHAIRMAN ABDEL-KHALIK: Cycling.

MR. HEAD: -- cycling, and as part of that, there was some more discussion on testing and stuff. I think we will try to roll that into that, too. I think that was an interesting discussion there.

Is that everything?

MR. CHAPPELL: Oh, there were questions about the Japanese operating experience, the tech spec limit.

CHAIRMAN ABDEL-KHALIK: Right. The 1 gpm.

MR. CHAPPELL: The 1 gpm.

CHAIRMAN ABDEL-KHALIK: Right.

MR. CHAPPELL: There were two subparts. No. 1, what was the Japanese limit in the tech specs?

CHAIRMAN ABDEL-KHALIK: Right.

MR. CHAPPELL: And then, the second was the 1 gpm lower limit, how does that compare to the sensitivity of the instrumentation?

CHAIRMAN ABDEL-KHALIK: Right.

MR. CHAPPELL: And we will provide a comprehensive answer to that.

CHAIRMAN ABDEL-KHALIK: I think that is

consistent with the list I have been keeping track, and Maitri will --

MS. BANERJEE: The question on units, is that --

MR. EUDY: That's the homogeneity, non-homogeneity.

CHAIRMAN ABDEL-KHALIK: Consistency.

All right. Thank you very much.

We will now proceed with the presentation on Chapter 8.

MR. HEAD: Looking at our presentation on Chapter 8, again, the agenda is pretty much our standard agenda. Today, joining us we have Evan Heacock, and Bill Stillwell will also be able to weigh-in on whether there is any risk-related PRA-type questions. Vince is also available to help us with any questions on the FSAR.

So, I will turn it over to Billy at this point.

MR. STILLWELL: We will continue with our discussion with the FSAR. Chapter 8 is the electrical systems, specifically the offsite system, outside power system, and onsite power system. So, this does the transmission lines to the site and also through the switchyard.

Included is a supplemental section for station blackout and, also, an appendix for miscellaneous electrical systems, such as cathodic protection, heat tracing, and grounding system.

At this point, for the discussion of the offsite and the onsite systems, I will turn it over to Evan.

MR. HEACOCK: My name is Evan Heacock. I am with the South Texas Project. I have been with South Texas for 11 years.

I have been doing design and analysis work and electrical distribution for 20 years. I also sit on Subcommittee 4 of the Nuclear Power Engineering Committee, IEEE set. We deal with, basically, all the power. Our Subcommittee 4 deals with the power standards for the nuclear power industry.

I have also dealt quite a bit with our transmission operators and owners within the State of Texas. I deal directly with ERCOT. I have been dealing with them since I have been at South Texas and, also, our transmission companies. We have had quite a bit of dialog back and forth over the years.

Also, I deal with the implications that we have had with the NERC standards that have come out.

I have actually been the point-of-contact in establishing the NERC requirements within the South Texas Project itself.

What I would like to do is start going over our offsite transmission network. We have a set of bullets here. But, for ease of describing what is going on, I would like to go to the next figure and kind of describe what our overall design is, and to kind of give you a history of what we have presently. What it shows is what we are going to.

The South Texas Project Units 1 and 2 have a switchyard with nine incoming transmission lines. The nine transmission lines tie into various parts of Texas, major load centers and generation centers within Texas in Houston, San Antonio, Austin, and the Corpus Christi area. We have a very diverse and robust tie throughout the State from a transmission standpoint since we tie to these various areas.

What we are going to for 3 and 4 is that we will basically take five of the nine transmission lines and split them up between 1 and 2, and 3 and 4. We will have a separate switchyard for Unit 3 and 4 which consists of a breaker-and-a-half scheme.

As you can see on the drawing, a

breaker-and-a-half is two buses. There will be a north bus and a south bus at 345 kV, tied together by three breakers in the center through each bay, where the center breaker is the, quote/unquote, "half breaker," which is shared between two different lines, typically.

The lines that we will bring over also will tie into the major centers within Texas. We go back into Houston. We will tie into Corpus Christi, and we tie back to San Antonio with a remote tie-back into the Austin area through one of the other transmission lines.

What we are also required to do is to upgrade two of our transmission lines on our existing right-of-way. We will not have any new transmission lines come in, but we do have to upgrade two of our transmissions to handle the increase of power coming out of the units themselves.

MEMBER-AT-LARGE STETKAR: Which two are those?

MR. HEACOCK: The Hillje lines. Both of them are the Hillje.

MEMBER-AT-LARGE STETKAR: Both of those are going to be upgraded?

MR. HEACOCK: Correct.

Also, one of the items, when we are going

through this and dealing with our transmission companies, we have to do what they call an interconnection study. Basically, the transmission companies and ERCOT rules say that you need to be able to withstand single-contingency failures. Worst-case single-contingency for us is the loss of two lines, mainly because we share common right-of-way or common towers.

If you look over to the righthand side of the drawing, you will see two arrows going off the side. That is basically one contingency. So, ERCOT has to plan for the loss of both of those lines any particular time.

MEMBER-AT-LARGE STETKAR: That is one common tower line over to Velasco?

MR. HEACOCK: That's correct. That shares the same towers, Dow 18 and Dow 24.

MEMBER-AT-LARGE STETKAR: And the six lines that you show going northwest, those are actually three tower lines, right?

MR. HEACOCK: Correct, and two separate, we qualify those as two separate corridors.

MEMBER-AT-LARGE STETKAR: I wanted to ask you, you don't have much in your presentation on the offsite power connections. I am going to drill you a

bit about those.

MR. HEACOCK: That's fine.

MEMBER-AT-LARGE STETKAR: In the FSAR, you talk about those six lines on the common right-of-way. The statement is made that, for the purpose of analysis, the right-of-way has been considered as two independent rights-of-way.

I guess I question how you do that. I mean I know how people do that electrically. It is not clear to me how you do it physically, and whether -- it is about a 20-mile span, if I remember.

MR. HEACOCK: Right, there's 20 miles.

MEMBER-AT-LARGE STETKAR: So, I am curious whether you looked at what happens if you lose all six of those lines. I'm going to also pull you back because I recognize that we are talking about Units 3 and 4. So, we have our Units 3 and 4 box and blinders on. I'm going to pull you back to the whole site because you actually are going to have four operating nuclear reactors at this site that are being fed from, depending on how I count them, seven or nine transmission lines on maybe two or maybe three rights-of-way, because it is not clear whether the line to Blessing, how much credit you can take for that line.

What happens if you lose all six of the lines through a storm, for example, on that north right-of-way? What happens to the four units?

MR. HEACOCK: Can I go back to your corridor question first?

MEMBER-AT-LARGE STETKAR: Sure.

MR. HEACOCK: On the 20-mile stretch, why we say that is two, two of the tower sets of the three are fairly close to each other. We had a space between the second and third. So, basically, the general idea being there is that, if you have a loss of the tower due to a storm, that the tower will not fall over to the other section.

So, from the physical standpoint, we are separating them from a falling over. It will not fall over and go into the other line. So, that is why we say two separate ones.

MEMBER-AT-LARGE STETKAR: Okay.

MEMBER SIEBER: That's in the COL.

MR. HEACOCK: Sir?

MEMBER SIEBER: That was written up in the COL, right?

MR. HEACOCK: Yes. So, that is, basically, how we have been treating from day one for even 1 and

2.

MEMBER-AT-LARGE STETKAR: Well, but 1 and 2, I will give you, you have sort of three geographically-diverse lines, even if you take Blessing.

MR. HEACOCK: True. True.

(Laughter.)

And the second part of your question is, if we had a storm or tornado --

MEMBER-AT-LARGE STETKAR: What happens, have you done an analysis to see what happens if you're operating all four units at the site, 100 percent power, and a storm comes through, and you eliminate those six transmission lines? What happens to the units?

MR. HEACOCK: Well, the units will trip.

(Laughter.)

We will end up having to trip the units because we won't be able to send the power out --

MEMBER-AT-LARGE STETKAR: Right.

MR. HEACOCK: -- on the remaining transmission lines. They will be not rated; the Dow lines will not be able to handle a full four units.

MEMBER-AT-LARGE STETKAR: Okay. Now all four units will trip. What happens to the power supply back to the units?

MR. HEACOCK: To clarify, they will be tripped. Now we do have some protection that might trip it automatically on out-of-step due to the amount of power trying to be pushed through the main lines, or it will be mainly tripped by the operation.

MEMBER-AT-LARGE STETKAR: You're trying to push out a lot of --

MR. HEACOCK: It would be very hard. More than likely, they would be automatic, but there could be a bit of a race there.

But what will happen is that, after the trip of the units, the tie-back for those two Dow lines will be actually sufficient power to power up the safety loads and non-safety loads.

MEMBER-AT-LARGE STETKAR: For all four units?

MR. HEACOCK: For all four units.

MEMBER-AT-LARGE STETKAR: You have analyses to show that?

MR. HEACOCK: We have not done a full analysis to that. That will be something I will have to take back. But from a voltage regulation standpoint and a power availability, yes, I am confident that we will have no problem with the ability to bring power back in to support

four units in a shutdown.

MEMBER-AT-LARGE STETKAR: You don't take credit for the Blessing line, as I understand it?

MR. HEACOCK: I do not take credit for it on 3 and 4.

MEMBER SIEBER: Do you take credit for Hillje?

MR. HEACOCK: I do not take credit for Hillje, either.

MEMBER SIEBER: Because it crosses underneath?

MR. HEACOCK: Correct.

MEMBER SIEBER: And that is not going to be changed?

MR. HEACOCK: That is not going to be changed.

MEMBER SIEBER: Okay.

MR. HEACOCK: That's not as a credited offsite source. For our power transmission situation, yes.

MEMBER SIEBER: Well, it works as long as --

MR. HEACOCK: Yes, sir.

MEMBER SIEBER: -- no wind blows or something like that.

MR. HEACOCK: And to your point, there's

another point, that we have buried one transmission line to ensure that we don't have that issue, which is one of the Dow lines coming over the three.

MEMBER-AT-LARGE STETKAR: Well, but that is a Unit 3/4. As soon as it gets over to Unit 1, it goes up to the tower --

MR. HEACOCK: Well, yes, it does not cross over anywhere else then.

MEMBER-AT-LARGE STETKAR: Yes. Oh, you're talking in terms of crossover protection?

MR. HEACOCK: Right, right.

MEMBER SIEBER: Do you have, just off the top of your head, the ratio of the total expected momentarily power output of the three units at STP versus the entire --

MR. HEACOCK: ERCOT grid?

MEMBER SIEBER: Right.

MR. HEACOCK: No, I do not.

MEMBER SIEBER: Is it 5 percent, 10 percent, 30 percent?

MR. HEACOCK: It would be close to 10. It would be probably a little less. It depends on the time of year. But if we are talking about peak load, it would be about 8 percent of the ERCOT load, and it would be

higher, of course, in lighter load periods.

MEMBER SIEBER: Okay. Well, that is one of the factors that goes into the stability analysis, which I take it hasn't been done yet?

MR. HEACOCK: We have done a stability analysis from a standpoint of loss of single largest units, which is the loss of Unit 3 and 4. I specifically asked for our transmission companies doing the analysis to do a stability analysis on both 3 and 4 being tripped, again with a scenario --

MEMBER SIEBER: All four?

MR. HEACOCK: No, it is not credible. That is not a credible scenario as far as FERC, ERCOT, and NERC rules. That is potentially beyond what they analyzed for. That is like a quadruple loss.

MEMBER SIEBER: Uh-hum, but the switchyards are tied together, nonetheless.

MR. HEACOCK: The switchyards are tied together, but if you lose one switchyard, it would not propagate over, because of the breaker schemes and protection schemes. That is the other reason for having separate switchyards, too, is that we would not have failure. A failure in one switchyard will not necessarily propagate over to the other switchyard and cause a trip

at the other end. So, we are minimizing that with separate switchyards. There is a tie, you are correct.

MEMBER SIEBER: Okay, I will think about that.

(Laughter.)

MR. HEACOCK: That's fine.

MEMBER SIEBER: Thank you.

MR. HEACOCK: Uh-hum.

Any other general questions?

CHAIRMAN ABDEL-KHALIK: Please continue.

MR. HEACOCK: Okay. Let's go back over our intro bullets, if we can, just to make sure.

We kind of talked about it. We have the six transmission lines connecting to the South Texas Project. We talked about we have analyzed the loss of any double circuit line not affecting the stability of the units. Grid stability is maintained. We have done the analysis to show that the loss of both Units 3 and 4 does not cause the grid to go unstable.

Again, we talked about the breaker-and-a-half scheme, which is what we have currently for even 1 and 2.

We have also gone through and looked at failure modes and effects to show that no single failure prevents

offsite power from supporting safety function during any possible event. Okay?

Let me go to slide 7.

For one of our major departures that we had in Chapter 8.3, and it ties into 8.2, was the Standard Departure 8.3-1, which is where we changed our plant medium voltage from a 6.9 single voltage distribution to a dual.

MEMBER-AT-LARGE STETKAR: I'm sorry. You are going to get inside the plant here pretty quick, aren't you?

MR. HEACOCK: Uh-hum.

MEMBER-AT-LARGE STETKAR: Let me keep you back out at the switchyard just for a couple of questions.

MR. HEACOCK: Okay.

MEMBER-AT-LARGE STETKAR: I noticed that you make a point that all of the 345-kV breakers out in the switchyard have double -- there's a dual protection system out there, double trip coils on each breaker.

MR. HEACOCK: Correct. Correct.

MEMBER-AT-LARGE STETKAR: What about the closed coils on the breakers? Are they single-closed coil, double-closed coils?

MR. HEACOCK: That's a good question. Off

the top of my head, I can't remember if we specified.

MEMBER-AT-LARGE STETKAR: That's a question.

MR. HEACOCK: Yes.

MEMBER-AT-LARGE STETKAR: Because where I am headed on this is, if you do lose all offsite power, and if the cause of that offsite power clears the switchyard, which oftentimes in the real world it does --

MR. HEACOCK: Yes.

MEMBER-AT-LARGE STETKAR: -- at some point in time, you are going to have to reclose those breakers.

MR. HEACOCK: Yes.

MEMBER-AT-LARGE STETKAR: So, my question is, if you have two DC power supplies out there, what is the rated life of the batteries for those DC supplies? And if you only have single-closing coils on those breakers, how do you figure out which breakers you can operate when you need to operate them?

MEMBER SIEBER: If you turn the switch --

MEMBER-AT-LARGE STETKAR: You try it, and you find out somebody should have thought about that today, rather than --

(Laughter.)

MEMBER SIEBER: Well, a dead battery is not

a -- that's a real issue.

MR. HEACOCK: Yes, I agree, it is a very, very real --

MEMBER SIEBER: I have seen substations completely destroyed because the battery was dead.

MR. HEACOCK: That is true. It is a very real scenario. For maintenance of the batteries, we are imposing requirements for the transmission companies to test this.

I will check on the closed-coil situation.

MEMBER-AT-LARGE STETKAR: Check on the closed-coil, and, also, do you have the rated life on --

MR. HEACOCK: No, we have not done it. That has not been designed yet at this particular point in time. I expect it to be a 10- to 20-hour battery, plus -- well, mainly because there's not much load. When you're sitting idle, there's really not much load on the 125 out there.

MEMBER-AT-LARGE STETKAR: That would be great.

MR. HEACOCK: The other part is that we will feed the power for the switchyard from 3 and 4 combustion turbines. So, they will have power continuously, if we have lost all site sources.

MEMBER SIEBER: And that's at 20-megawatts --

MR. HEACOCK: Twenty-megawatts turbine generator.

MEMBER SIEBER: One turbine?

MR. HEACOCK: One per unit.

MEMBER SIEBER: Oh, one per unit? Okay.

MR. HEACOCK: Yes. There will be two total.

MEMBER SIEBER: Okay. You could almost start up with that.

MR. HEACOCK: Yes.

(Laughter.)

It would be close, but --

MEMBER-AT-LARGE STETKAR: One last question to kind of close out the switchyard. As I read through the FSAR and the RAIs, it wasn't clear to me who -- I will use the term -- owns in a functional sense, not a legal sense, who owns the switchyard. What company is responsible for doing the testing and maintenance work in the Units 3 and 4 switchyard, given the fact that there are three companies --

MEMBER SIEBER: In there.

MEMBER-AT-LARGE STETKAR: -- in there?

(Laughter.)

Or four, if you consider --

MEMBER SIEBER: If you count them.

MEMBER-AT-LARGE STETKAR: -- if you count them.

MEMBER SIEBER: Right.

MR. HEACOCK: Yes, we're definitely there with our --

MEMBER-AT-LARGE STETKAR: The question is, who has responsibility for that testing and maintenance work in the switchyard?

MR. HEACOCK: That is a very good question. What we have, since we are a deregulated industry in Texas from power generation, we have what we call an Interconnection Agreement that actually we are working on to complete this year. That will define roles and responsibilities for who does what within the switchyard and the boundaries of who has what responsibility for what equipment actually in the switchyard.

AEP Texas Central Company will have primary responsibility. This is their transmission area, service area. Our agreement will be, basically, with AEP.

MEMBER SIEBER: That's American Electric Power?

MR. HEACOCK: Right. They bought out the

old Central Power and Light Company --

MEMBER SIEBER: Right.

MR. HEACOCK: -- through the Central Southwest a number of years ago. So, they ended up with it also being down that way.

They will actually have responsibility for most of the maintenance in the switchyard. That falls under --

MEMBER SIEBER: Well, they have three lines out of the --

MR. HEACOCK: They have two lines.

MEMBER SIEBER: Two lines?

MR. HEACOCK: Yes.

MEMBER-AT-LARGE STETKAR: But it's in their area.

MR. HEACOCK: It's their service area. This is kind of the strange thing, yes.

MEMBER SIEBER: But, I mean, they each have two?

MR. HEACOCK: Center Point will have two. San Antonio will have -- I have to count these on the top of my head. Hang on a second. I've got it in here.

MEMBER-AT-LARGE STETKAR: There's nine lines is the problem.

(Laughter.)

MEMBER SIEBER: Well, somebody has three. I can look it up. I've run across it a couple of times, and it's not important.

MR. HEACOCK: Well, let's see, Center Point will probably maintain three of them, which will be the tie between 1 and 2, and 3 and 4. They had the Dow line, and they have one of the Hillje lines.

San Antonio has an Elm Creek line. Then, AEP will have the Blessing line and the Lawn Hill line.

MEMBER SIEBER: Okay. Now I guess the question is, somebody decides they need to do maintenance on a breaker.

MR. HEACOCK: Uh-hum.

MEMBER SIEBER: Who does the maintenance, the company that owns the breaker or somebody else?

MR. HEACOCK: What I expect for us to have is a similar agreement we have presently with 1 and 2 in which they have four owners of that switchyard, basically.

MEMBER SIEBER: Right.

MR. HEACOCK: But one company does maintenance as the, quote/unquote, "managing" partner for them all, which is Center Point for 1 and 2. I would

expect that to be the same for --

MEMBER SIEBER: But you don't have that right now?

MR. HEACOCK: We have not set up the agreements yet. That's why I say, I expect for us to in the agreements to be set up where AEP does all that, because AEP will control the switchyard from breaker opening, for clearances, and whatnot, to take out a line for somebody else.

MEMBER SIEBER: Who is the system operator?

MR. HEACOCK: The system operator for 3 and 4 will be AEP.

MEMBER SIEBER: Okay.

MR. HEACOCK: It will be out of their control center in Corpus Christi.

MEMBER SIEBER: Okay. So, they will operate all of the transmission lines out of the plant?

MR. HEACOCK: They will operate the STP 3 and 4 and the breaker. The remote end of that will be operated by the respective companies.

MEMBER SIEBER: Right.

MR. HEACOCK: Yes.

MEMBER SIEBER: You've either got a load or you don't.

MR. HEACOCK: Right.

MEMBER-AT-LARGE STETKAR: Speak to your control of the switchyard here.

MR. HEACOCK: Okay. For what we will have control over for 3 and 4 will be the generator breakers in the switchyard and the reserve auxiliary transformer feeds. That will be ours for Unit 3 and Unit 4.

MR. HEAD: What about access and knowledge of what's going on?

MR. HEACOCK: Okay. Thank you.

MR. HEAD: You're welcome.

MR. HEACOCK: Keep prompting.

The access will be controlled through South Texas, similar to what we have for 1 and 2. We have an access agreement in place that nobody goes in without notification of the shift supervisor, the shift managers. They have to get prior ability to get the access.

Actually, also, there will be a requirement that, if any breakers or any lines are controlled by AEP, they have to notify STP fire to opening those breakers or closing those breakers, so we know what's going on out in the switchyard for the breakers and lines. So, we understand what is occurring.

MEMBER SIEBER: The one utility with which

I'm quite familiar had dual locks on the gates to the switchyard. The one which was in the control room for the plant, the other which was the transmission operators keep, and it took both of them to get in there. The clearance was initiated at the plant. In addition to the transmission line clearance, they controlled the line itself if, for example, a circuit breaker repair or something like that was to be done.

Do you have something as stringent as that? Or you just call the controller up on the phone and say, "We're going in the switchyard. We have to work to do on this."?

MR. HEACOCK: Presently, on 1 and 2 -- we should implement it on 3 and 4 -- we have one lock. It is an STP lock, not a transmission. In other words, the transmission companies do have a key to that particular lock, but it is limited.

The access has to always be given prior to going into the switchyard. That is a requirement. Before anybody goes in, they have to notify the control room to let them know what they are going to be doing in the switchyard from an activity standpoint.

From a clearance standpoint, we are on notification for those clearances, not part of the

clearance process itself.

MEMBER-AT-LARGE STETKAR: Evan, just so I understand, you said STP will have -- you will be able to operate from the control room, I think you said, the generator breaker and the reserve aux transformer breakers.

On the diagram that is up on the screen there, if I look at Unit 3, does that mean that you can operate the three breakers, both bus-side breakers and the center breaker, that feed the Unit 3 RATs?

MR. HEACOCK: Correct.

MEMBER-AT-LARGE STETKAR: Can you operate the bus-side breaker and the center breaker from the main power transformer supply or --

MR. HEACOCK: Correct.

MEMBER-AT-LARGE STETKAR: You can?

MR. HEACOCK: Yes.

MEMBER-AT-LARGE STETKAR: Okay. So, those five circuit breakers --

MR. HEACOCK: Will be what we have, yes, access to to operate. And the rest will be --

MEMBER-AT-LARGE STETKAR: But you can't, with the exception of tying that one transmission line into what would feed the unit aux transformers, you can't

operate any other circuit breakers to reconnect the transmission line to the plant?

MR. HEACOCK: No. We do not have that since we are deregulated. Basically, we had to ask fairly sternly to have control over the generator breakers and the RATs, since that is in the switchyard. But they have agreed to give us that control.

MEMBER BROWN: You said five breakers?

MR. HEACOCK: Well, for one unit.

MEMBER-AT-LARGE STETKAR: For one unit?

MR. HEACOCK: For one unit. There would be another five for the opposite unit.

MEMBER-AT-LARGE STETKAR: I mean, in this drawing, and I assume this is correct, the only way that you, from your control room without somebody else's help, could actually connect power back into either one of the Units 3 and 4 would be to close the center breaker from, you know, the center breaker in the cross bus from the Unit 3 main power transformer. That would tie that one transmission line.

You know, you could make Bus No. 1 live that way and connect it back over into Unit 4. But that is the only way. Otherwise, you rely on somebody else --

MR. HEACOCK: Correct.

MEMBER-AT-LARGE STETKAR: -- to do your breaker switching?

MEMBER SIEBER: Or your turbine --

MEMBER-AT-LARGE STETKAR: Well, you know, I'm thinking about recovering a lot of the power.

MR. HEACOCK: You are correct as far as us being able to do that from the control room itself. We can always dispatch somebody out to manually close the breaker, if we have to. That's not always desirable, but we can do that.

That is also consistent with how we operate 1 and 2. We are in the same operation control for 1 and 2.

MEMBER SIEBER: Does ERCOT know you can do that?

MR. HEACOCK: ERCOT knows and transmission companies know. Actually, again, we have communication paths set up. For 1 and 2, we use a ring-down line to our transmission companies specifically, so that we can communicate with them during events.

MEMBER SIEBER: So, you actually don't physically need anything from the transmission company to get into the switchyard, all of the switchyard?

MR. HEACOCK: Correct.

MEMBER SIEBER: Okay.

MEMBER BROWN: In order to connect 3 to 4, do you have to -- I'm just trying to look at your diagram -- do you have to isolate yourself from the main transmission?

MR. HEACOCK: Say that for which one?

MEMBER BROWN: Do you have to isolate? In other words, if you want to feed over to your other plant because you've got a loss of whatever you need, you need to get power, the generator went down, or whatever, or one of your other sources, your other source -- do you have to isolate yourself from the other lines or not?

MR. HEACOCK: Yes, I'm not --

MEMBER BROWN: Or do you stay on the grid or not? I just think about you're providing power. That is the purpose of the plant.

MR. HEACOCK: Yes.

MEMBER BROWN: Does this show the generator breaker?

MR. HEACOCK: We probably have another diagram. We will show you the internal configuration of the buses.

MEMBER BROWN: Okay.

MR. HEACOCK: It might be easier to go with that.

MEMBER BROWN: Well, I think I looked at that. It didn't relate to this setup. They were two separate drawings, and I didn't go do that at the time.

MR. HEACOCK: Yes, the idea being that we would never totally isolate the units from the grid and, quote/unquote, "from each other". They are always going to be electrically-connected one way or the other.

What we have is diversity, the several different being RAT, reserve auxiliary transformer A or B.

MEMBER BROWN: No, I saw that in your other diagram.

MR. HEACOCK: Yes.

MEMBER BROWN: I got that part.

MR. HEAD: Can I set you up again with respect to the other companies' obligation to us and conditions in black start and that sort of --

MR. HEACOCK: Yes. From the obligations, for the regulation during the deregulation period, I was actually very heavily involved with what we needed to put in place from a protocol standpoint within ERCOT operating procedures and guidelines.

Basically, we ensured that we had, that the nuclear plants within Texas, not just South Texas, mind

you, had priority, first priority for restoration of offsite power during a grid blackout.

We also have in our Interconnection Agreement the same general protocol to make sure that they understand that we are an essential load, to restore back to us as soon as possible.

And the Interconnection is really our legal tie-back to the transmission companies on how they need to respond to us and how we respond with them. Okay?

Any others?

MR. HEAD: I'm good.

MR. HEACOCK: Okay. That was a very good question.

Okay. Going into our standard departure, we started talking about this a minute ago. STP DEP 8.3-1 retains our medium voltage distribution from a purely 6.9 to a dual voltage, medium voltage, 13.8 and 41.60.

The power generation buses, which are basically our balanced-plant loads, since our loads increase fairly significantly for the units as we went to electric-driven-type P-pumps and we also have some very large circulating water pumps.

We decided to increase our bus voltage to 13.8 to help with the distribution and voltage problem

voltage drop issues and, also, cable sizing. So, the PG buses, the power generation buses, went to 13.8, which is Bus A1, B1, C1, and D1.

The plant investment protection buses and the safety buses were changed from 6.9 to 41.60. The 41.60, being a fairly common distribution also within the plants and general design of others within the U.S.; the 6.9 has also been used at various plants for their safety buses, but the 41.60 just kind of mimics more closely more of the plants. It mimics what we have basically in Units 1 and 2. We have a three-bus design at 41.60 also for safety-related buses.

We actually also have some DOP 41.60, which would be similar to the plant investment protection buses. So, 1, 2, 3, 4 are very similar here in this design that we have going forward.

We have, of course, the three-unit auxiliary transformers. Two of them are dual-winding, 13.8, 41.60, and auxiliary transformer C is a two-winding 41.60 secondary output.

We also have added an additional reserve auxiliary transformer, mainly due to increases of loads. For startup, instead of an oil-fired boiler, we went with an electric boiler, which is 20 megawatts. So, we

ended up adding another transformer just to ensure that, during a startup scenario, we have sufficient power to bring the unit up with that electric boiler.

MEMBER SIEBER: The 13 kV is for the heavy loads in the plant?

MR. HEACOCK: Correct. Correct. All the major loads. All the very large pumps. Again, the reactor feed pumps.

MEMBER SIEBER: But not safety load?

MR. HEACOCK: Not safety, correct. But they do, the 13.8 buses do feed direct internal pumps through an adjustable speed drive. The same thing with the reactor feed pumps.

Again, we have four buses. We went to a four-pump design throughout the plants. So, the four buses mimic well with the mechanical systems.

MEMBER SIEBER: Yes, why did you do that? The original DCD was three. Now you end up with four buses, but only three diesels.

MR. HEACOCK: Well, that's four buses at the non-safety, but still three buses on the safety. We did not change the number of safety buses. We still have three safety buses.

MEMBER SIEBER: Okay.

MR. HEACOCK: So, that part really did not change. It is mainly the medium voltage at which we are distributing power there in the safety.

MEMBER SIEBER: Okay.

MR. HEACOCK: Okay? As you can see, we have added several other bus ties, CTG1, 2, and 3. We basically can connect just about any kind of a feed that you can want, back feed, forward feed, for not only outages, but, also, for emergency conditions.

You see that the combustion turbine generator ties to CTG1. Therefore, we can feed 13.8 buses, if we need to. We have some requirements to ensure that we can power a condensate pump for certain scenarios. Then, we also, going through a transformer, we can feed the safety buses and the non-safety PIP buses.

The design also being that the CTG, on a loss of voltage on any of the PIP buses, that the CTG will automatically start on loss of voltage and automatically connect to two pre-assigned PIP buses.

MEMBER-AT-LARGE STETKAR: Okay. I was hoping you could get to that point, so I could stop you. I'm confused.

MR. HEACOCK: Okay.

MEMBER-AT-LARGE STETKAR: The reason I'm

confused is I read what you just said, and I'm trying to figure out how this beast actually works.

What's the normal breaker alignment on bus CTG3?

MR. HEACOCK: CTG3, the normal breaker?

MEMBER-AT-LARGE STETKAR: And in particular, is the low-side breaker from the 13.8-kV transformer and the breaker from the RAT normally closed?

MR. HEACOCK: No.

MEMBER-AT-LARGE STETKAR: The RAT is normally open?

MR. HEACOCK: What we have is we won't have the transformer, the two winding transformers coming from CTG1 will not be closed at the same time we have a feed from RAT B. We would not want to have that path --

MEMBER-AT-LARGE STETKAR: Right. So, is RAT B breaker normally closed?

MR. HEACOCK: I'm going to go off the top of my head, but I believe we do have that as our normally-closed breaker. That will provide power to CTG3. So, we can automatically also feed or do a bus transfer to any of the PIP buses.

MEMBER-AT-LARGE STETKAR: I'm confused. I want to know what happens if I lose, for example, UAT

A.

MR. HEACOCK: Okay.

MEMBER-AT-LARGE STETKAR: I mean just lose UAT A. What happens? And the plant is operating at 100 percent power, and I don't want to get into -- don't tell me about feedwater pumps tripping and all that kind of stuff. Electrically, I want to know what happens.

MR. HEACOCK: I wasn't going to go anywhere but electric for you.

MEMBER-AT-LARGE STETKAR: Good.

(Laughter.)

MR. HEACOCK: I don't want to get into that transient.

MEMBER-AT-LARGE STETKAR: Yes, that's right.

MR. HEACOCK: What happens if we lose UAT A --

MEMBER-AT-LARGE STETKAR: UAT A.

MR. HEACOCK: -- on a fault?

MEMBER-AT-LARGE STETKAR: UAT A just vaporized.

MR. HEACOCK: Okay. It went away.

MEMBER-AT-LARGE STETKAR: It went away.

MR. HEACOCK: What will happen is, of course,

if it went away, our protective relaying would trip out. Basically, the main power transformers, breakers in the switchyard would open up. We would lose that feed. So, we would basically lose feed to A, B, and C --

MEMBER-AT-LARGE STETKAR: Okay.

MR. HEACOCK: -- which would cause us to have an under-voltage on PIP buses A2, B2, and C2, also, A3 and B3.

MEMBER-AT-LARGE STETKAR: Right.

MR. HEACOCK: Okay. That is the normal lineup for power for the safety buses. A3 and B3 are normally powered from the unit auxiliary transformer, and C3 is powered from the reserve auxiliary transformer.

MEMBER-AT-LARGE STETKAR: So far, I've got you.

MR. HEACOCK: Okay.

MEMBER-AT-LARGE STETKAR: Thank you.

MR. HEACOCK: So, we will lose that. And what we end up doing is that we go through a dead-bus transfer. We end up going to diesel generator for Div 1, and diesel generator for Div 2 would start on loss of voltage, and would, then, connect after it came up-to-speed, rate of speed and voltage within 20 seconds.

MEMBER SIEBER: Automatically.

MR. HEACOCK: Automatically, correct. It would load and close, and those two safety buses would be loaded on.

MEMBER-AT-LARGE STETKAR: Because you don't have a dead-bus transfer to the, let me just call it, the RAT, the other source?

MR. HEACOCK: Correct.

MEMBER-AT-LARGE STETKAR: The RAT supply?

MR. HEACOCK: Correct.

MEMBER-AT-LARGE STETKAR: Okay.

MR. HEACOCK: And Charlie 3 safety bus would stay powered from its offsite source.

MEMBER-AT-LARGE STETKAR: Okay.

MEMBER SIEBER: So, you've got 15 seconds before you close back in?

MR. HEACOCK: Correct. It is a 20-second start time for the diesel.

MEMBER SIEBER: Okay, 20 seconds.

MR. HEACOCK: Yes.

MEMBER-AT-LARGE STETKAR: What happens to the PIP buses? This is where I'm confused.

MR. HEACOCK: The PIP buses will lose power. They will go out on under-voltage.

MEMBER-AT-LARGE STETKAR: Right.

MR. HEACOCK: What we expect to do, it could go two different ways. If we lose, for whatever reason, if we have no other power available --

MEMBER-AT-LARGE STETKAR: I didn't say that.

(Laughter.)

MR. HEACOCK: Yes, I know.

MEMBER-AT-LARGE STETKAR: I don't want contingencies here. I want you to explain what happens to what I said.

MEMBER SIEBER: After the reactor trip.

MR. HEACOCK: Yes, after the reactor trip. Well, what will end up happening is that we will -- what we are working toward is doing a dead-bus transfer to the ultimate source for the PIP buses. So, it would pick up on an ultimate source, if it available, from like RAT A.

If we do not, what we will have is that we will send a signal to the CTG, to the combustion turbine to start, and the combustion turbine will come in speed and reach its rated voltage and speed, and connect that way automatically.

MEMBER-AT-LARGE STETKAR: But RAT B is still connected to bus CTG3. Am I going to trip that supply?

MR. HEACOCK: No. The logics, we are working

on logics presently. The logics will dictate that, if CTG3 bus 3 has power, it will close in on the PIP buses and repower the PIP buses.

MEMBER-AT-LARGE STETKAR: So, the statement in the FSAR that a selected pair of PIP buses will be picked up from the CTG isn't --

MR. HEACOCK: That's from the CTG, if you lose --

MEMBER-AT-LARGE STETKAR: What it says in the FSAR, and where I got confused, "On loss of normal or alternate preferred power" --

MR. HEACOCK: Yes.

MEMBER-AT-LARGE STETKAR: -- "an automatic transfer of pre-selected buses occurs via a dead-bus transfer to the combustion turbine, which automatically starts on loss of power. The PIP systems for each selected load group automatically restart to support their loads."

That is where I got confused about how --

MR. HEACOCK: How it all works? Yes.

MEMBER-AT-LARGE STETKAR: How it is going to work because this was under the description of the PIP buses.

MR. HEACOCK: Correct. No, and that's the intent being more for that statement, is if we lose,

truly lose its preferred and alternate, you do not have voltage sensed anywhere. If we have any voltage from any of the other sources, it is going to go to that source first.

MEMBER-AT-LARGE STETKAR: I understand if you think in station blackout loss of offsite power space. I'm trying to think about things, transients that happen in the real world.

MR. HEACOCK: Correct. Then, the logics we are working on presently to determine that sequence of events.

MEMBER-AT-LARGE STETKAR: You don't really have the final design for that?

MR. HEACOCK: No, we have not. We are working on it.

But the bottom line is what's in the SAR presently is what we are working for as the general basis, but we are going through and ensuring that during all scenarios what you are worried, basically, telling us that we will not end up with parallel in buses --

MEMBER-AT-LARGE STETKAR: Yes, I mean that is where I got confused --

MR. HEACOCK: Right.

MEMBER-AT-LARGE STETKAR: -- because I see

either in the SAR, the way it is written, if I just think logically and look at electrical switching, I either would have to open up the RAT B or wind up paralleling the combustion --

MR. HEACOCK: Correct.

MEMBER-AT-LARGE STETKAR: -- turbine generator with that RAT to satisfy the fact that the CTG picks up those buses somehow.

MR. HEACOCK: Yes. You are correct; they will not be allowed to be parallel at any time. Like I said, we are going through with the details and the logics on that presently.

So, we are working through to make sure, and at no time will we ever allow paralleling the system, unless it is being tested.

MEMBER-AT-LARGE STETKAR: Well, I mean not allowing paralleling of the system is one thing. Actively tripping off a reliable source of power to prevent paralleling is also not necessarily a good idea.

MR. HEACOCK: Correct, correct. I would agree. When we finish our final logics, we will end up changing that description that you see.

MEMBER SIEBER: And trying to sync to it with a diesel or a combustion turbine has its -- it is

a pretty big risk to it.

MR. HEACOCK: Yes.

MEMBER SIEBER: If you can do it at all, if you have the controls to do it.

MR. HEACOCK: Yes. True.

MEMBER-AT-LARGE STETKAR: I would be interested to see how that all finally works.

MR. HEACOCK: Okay.

MEMBER SIEBER: Well, it looks like, when you get in this condition, you are going to stay in this alternate mode of operation for a long period of time, right?

MR. HEACOCK: It will take some time to get back out of that, correct.

MEMBER SIEBER: Yes.

MR. HEACOCK: The operations folks will have to --

MEMBER SIEBER: Hours or many hours?

MR. HEACOCK: It depends on the event. You know, it is really event-based.

MEMBER SIEBER: You've got to take care of the plant first.

MR. HEACOCK: Correct. As long as you have a reliable source, operations is not going to worry about

the feeds, and we are going to be designed to such that it can continue --

MEMBER SIEBER: I would hope so.

MR. HEACOCK: Yes. Allow that, the last thing to worry about being the power.

MEMBER-AT-LARGE STETKAR: Do you happen to know -- I will let you off the hook here on this in just a second.

(Laughter.)

One thing I was just thinking about is -- and you can tell me you don't have the design worked out, and we will let it die there. But the 4-kV winding on RAT B, does that have enough capacity to feed two PIP buses and a safety bus simultaneously, whatever loads would be on there?

I mean, in your scenario, because of the time, I don't want to get into figuring out how you pre-select which two PIP buses are going to be picked up by this transfer that may not be designed yet. But what amount of load, combined safety bus and PIP buses, can you actually supply through that one winding? Do you know?

MR. HEACOCK: Off the top of my head, no, I cannot. We are working through --

MEMBER-AT-LARGE STETKAR: That's good enough. Fine.

MR. HEACOCK: And we have procedures to make sure we don't exceed the winding, but --

MEMBER-AT-LARGE STETKAR: Fine, fine.

CHAIRMAN ABDEL-KHALIK: Let's proceed.

MEMBER-AT-LARGE STETKAR: Yes, we should proceed.

MR. HEACOCK: Is that a followup or is that just --

MEMBER-AT-LARGE STETKAR: Well, it more depends on the design. I mean it's --

MR. HEACOCK: Yes, it is design-related, but --

MEMBER-AT-LARGE STETKAR: However the design works.

MR. HEACOCK: Okay. We will also have procedures in place to make sure that we don't exceed the loading of the windings, of the RATs or the unit auxiliary transformers themselves.

MEMBER SIEBER: Now all the details of how you would operate the plant in these kinds of situations show up in the EOP?

MR. HEACOCK: Without knowing where we are

at with EOPS yet --

MEMBER SIEBER: It should be not in all the supplements that you're making, but in the EOPs, which I presume somewhere the staff would review, and we would never see, right?

MR. CHAPPELL: EOPs are off normals.

MR. HEACOCK: Yes.

MR. CHAPPELL: We have abnormal operating procedures that would also address loss of power supplies.

MEMBER SIEBER: Yes, well, they are abnormals or EOPs.

MR. HEACOCK: But, typically, what I have seen in the past for 1 and 2, yes, they address how you configure your buses.

MEMBER SIEBER: I guess I would hold that open in my own mind because I'm really curious as to how you are going to do this.

MR. HEAD: But we have those issues on 1 an 2 right now that are addressed by EOPs and alternate procedures.

MR. HEACOCK: And, then, how they are supposed to be aligned. On loss of this bus, you are supposed to check to see if you have an alternate source. If you do, you go to your alternate source, and so on

and so forth.

MEMBER SIEBER: Right. Okay.

MR. HEACOCK: Yes. There's a whole litany of steps they have to go through.

MR. HEAD: Loading limits.

MR. HEACOCK: Yes.

MEMBER SIEBER: Okay, thanks.

CHAIRMAN ABDEL-KHALIK: We're going to run over. Please proceed.

Do you have a question?

MEMBER-AT-LARGE STETKAR: Yes, I do.

CHAIRMAN ABDEL-KHALIK: Okay.

MEMBER BROWN: I had one other high-level question.

CHAIRMAN ABDEL-KHALIK: Let's do John's first and then we will take your question.

MEMBER-AT-LARGE STETKAR: Just this, again, is more curiosity. Why did you decide not to have a dead-bus transfer between the UAT and the RAT at either the non-safety or the safety buses?

MR. HEACOCK: Our certified design went with a non-transfer, and we just adopted that. From the standpoint now, however, we expect to change that because I don't agree with that philosophy of going -- without

an alternate source being available, switching over to it.

MEMBER-AT-LARGE STETKAR: The only reason I ask that is we have recently looked at a COL application from another vendor, you know, another design center. When they went to go actually build that plant, they decided that it was probably better to have an automatic transfer, even though the original design on that plant didn't have a transfer.

MR. HEACOCK: Yes.

MEMBER-AT-LARGE STETKAR: So, I am just curious.

MR. HEACOCK: No, it is much better.

MEMBER-AT-LARGE STETKAR: I'm just curious whether there was any reason other than continuity from the --

MR. HEACOCK: It was what's in the words in the certified design we adopted, but the actual design, you will see that it will have a dead-bus transfer.

MEMBER-AT-LARGE STETKAR: That will be another departure?

MR. HEACOCK: Yes. Well, it won't be.

MR. HEAD: No. We are licensing --

MEMBER-AT-LARGE STETKAR: Oh, you are going

to license it this way and then --

MR. HEACOCK: It will be after.

MEMBER-AT-LARGE STETKAR: Okay.

MR. HEAD: He is proposing a change that we may adopt.

MEMBER-AT-LARGE STETKAR: Okay. I understand.

(Laughter.)

Continue. I understand. I understand.

CHAIRMAN ABDEL-KHALIK: Charlie, you had a question?

MEMBER BROWN: Real quick, what I was noticing, when I looked at this, was that there's no -- if you have a fault, a major fault, on any one input on any of the UAT A, B, and C, you have effectively eliminated your ability to supply power, do anything with the main transformer because it is a short right on the bus, if you have a major fault there. I just don't see isolation, your ability to isolate the primary of that transformer from the main power, the main generator or the rest of the feeds over to the other two UATs.

MR. HEACOCK: That's correct.

MEMBER BROWN: That means, if you have a fault there and it is a short of some kind, you're toast.

The breaker opens. The main generator breaker opens and you have shut down that all through the whole line.

MR. HEACOCK: Yes. This is not an unusual --

MEMBER BROWN: You use a switchyard input because there is no isolation of that primary side. There's no breaker on the input, is all I'm saying.

MR. HEACOCK: There's no breaker to the UATs, correct. If we have a fault there, it will trip the feeds back through the main -- trip the generator breakers out in the switchyard, which will, essentially you're correct, eliminate the power for all the buses.

The only difference being that we do have the one feed. The safety bus Charlie 3 is continuously fed from, or any of them, but our normal supply will be Charlie 3. It is going to be normally fed from a reserve auxiliary transformer. But this is a typical design for most plants.

What we do have --

MEMBER BROWN: I was thinking you need to provide -- I mean the ability to provide power, that's what they're there for. If there's one transformer major failure, it looks like you can't supply it.

MR. HEACOCK: Again, that is not different from any other design.

MEMBER BROWN: Okay. That's fine. That's the way it is.

MR. HEACOCK: The difference that we do have is that we have a main generator breaker that, if we trip the turbine or generator, for whatever reason, that generator breaker will open and isolate the generator.

MEMBER BROWN: No, I understand that part. I can see that. It is just that is all. I'm not familiar -- I am just not used to not seeing any isolation to any main power transformers from any sources, whether they be outside or whether --

MR. HEACOCK: And actually, we kind of thought --

MEMBER BROWN: I quit. I quit.

MR. HEACOCK: Okay.

MEMBER BROWN: You told us where they all are. Whether I like it, that's irrelevant.

(Laughter.)

CHAIRMAN ABDEL-KHALIK: Please proceed.

MR. HEACOCK: Okay. Let's go ahead and go to the next slide, yes, No. 9.

One of the items we also changed was the emergency diesel generator capability increased from the DCD from 5,000 kilowatts to 7200 kilowatts. This

is to accommodate increases in loads, more from site-specific changes that we had for our UHS, our ultimate heat sink pumps, and fans that we added and some of the HVAC loads that needed to be increased to --

MEMBER SIEBER: It's hot down there.

MR. HEACOCK: Yes. Yes, it is hot down there. We do call it tropicalization.

The other part is that we increased the combustion turbine size from a 9-megawatt to a 20-megawatt size. That was also so that we can load more buses as we needed to from the PIPs.

MEMBER SIEBER: Speaking of hot down there, you had an open item related to the emergency diesel generator operation at high temperatures, which you expect. Last I saw, that was still open.

MR. HEACOCK: This is the question of going from the certified design to 60-degrees feed ambience?

MEMBER SIEBER: Yes. Yes.

MR. HEACOCK: Correct.

MEMBER SIEBER: What are you going to do about that?

MR. HEACOCK: Well, No. 1, we are buying a very large diesel. From a standpoint of being able to handle at higher temperatures, we have derated -- we

bought a diesel generator set that was larger in size than we need, No. 1.

MEMBER SIEBER: Is it larger than 7200?

MR. HEACOCK: Yes. Actually, at a derated value at the higher temperatures, it is 8.1 megawatts or 9100 kilowatts.

MEMBER SIEBER: Okay. But it will run at the higher temperatures?

MR. HEACOCK: It is designed, the initial design was about almost 8400 kilowatts. That was its normal temperature running it as derated based on the temperature.

MEMBER SIEBER: A ship engine?

MR. HEACOCK: It's a peel stick. It will be a pitched peel stick.

MEMBER SIEBER: Okay.

MR. HEACOCK: But it is derated due to the temperatures, correct. It is bigger than the 7200 that we need. It is actually much bigger.

MEMBER SIEBER: And the staff doesn't know about that yet, right?

MR. HEACOCK: No, because we went out for bids, and just recently got to the point where we were bid. So, based on the feedback we are getting from the

vendor, we will eventually end up changing that. That will be more or less in the future.

MEMBER SIEBER: Yes, in due time.

MR. HEACOCK: Yes.

MEMBER SIEBER: Okay.

MR. CHAPPELL: Does that address the open item, as you understand it?

MEMBER SIEBER: Yes. Yes.

MR. CHAPPELL: Okay.

MEMBER SIEBER: The open item is addressed by the staff to their satisfaction. I'm sure they will look at the specifications to determine that it will operate under those conditions and produce the right amount of power.

MR. CHAPPELL: Correct.

MEMBER SIEBER: Okay.

MR. CHAPPELL: Right.

MEMBER SIEBER: That is all it takes to close it, and I don't need to know any more.

MR. CHAPPELL: Okay.

MR. HEACOCK: Okay. No other questions?

(Laughter.)

With that --

CHAIRMAN ABDEL-KHALIK: A related open item,

however, came up at the last meeting in terms of operating conditions for the people. But, you know, in terms of derating the diesel generators, as you go from 50 to 60 degrees C, maybe you have answered that question, and the staff is yet to evaluate your response to it. So, as far as we are concerned, that open item is still open.

MR. HEACOCK: Okay. And that goes for all the equipment in the room with it, these will fall under equipment qualification requirements due to the increased temperature. So, all those will be evaluated.

CHAIRMAN ABDEL-KHALIK: Right.

MR. HEACOCK: For the combustion turbine generator, since we increase from a 9-megawatt to a 20-megawatt, it does take a little bit more time for us to spin the unit up. So, we have actually increased the startup time from a two-minute requirement to a 10-minute, basically, to less than 10 minutes. This will keep us in the requirements of the Reg Guide 1.55, SBO, to where we do not have to perform a coping analysis. This, also, of course, serves as our alternate AC source.

MEMBER-AT-LARGE STETKAR: I understand that the combustion turbine will be up-to-speed in rated voltage within 10 minutes. Again, maybe I'm confused about the

design. But, as I read the description, it seemed to say that, if I lose offsite power -- now we will do a clean loss of all offsite power, instantaneous; everything is gone.

The combustion turbines start. For station blackout, none of the diesels start. Combustion turbines start automatically. They automatically re-energize the PIP buses. The PIP buses load.

Now I am sitting in the control room as an operator. I verify that the PIP buses have voltage. None of my safety buses have voltage. I need to now trip loads off the PIP buses or open up PIP buses and close manually the CTG feeds to the safety buses. Is that correct?

MR. HEACOCK: Right.

MEMBER-AT-LARGE STETKAR: And I can do that in zero time?

MR. HEACOCK: No, the point being it is less than 10 minutes that it will come up, so that we have still enough time for the operators --

MEMBER-AT-LARGE STETKAR: How much less than? 9.9999 minutes would satisfy the tech spec requirements.

MR. HEACOCK: Part of the station blackout

is upon recognizing you are in a SBO. The time starts at --

MEMBER-AT-LARGE STETKAR: I know I'm in an SBO.

MR. HEACOCK: Well, it is when you declare that SBO, that is somewhat of the timeframe of where you announce that you are there, and then you have the 10 minutes.

MEMBER-AT-LARGE STETKAR: I'm not a lawyer. I'm an operator.

MR. HEACOCK: Yes, yes.

MEMBER-AT-LARGE STETKAR: I know that I'm in an SBO. The lights went out. I looked at the buses. There's no voltage. The lights are out.

MR. HEACOCK: What we have is to ensure that we will be able to have operations. One of our overall requirements is to make sure operations will have the time to close those breakers in, to restore power to the safety buses within 10 minutes.

Right now, without us having procured the combustion turbine, we do not know exactly what that startup time is going to be. Some have close to eight minutes. Some have six minutes. We are expecting to procure one that has a startup time to where we can easily

meet the 10-minute requirement.

MEMBER-AT-LARGE STETKAR: Easily?

MR. HEACOCK: Well --

MEMBER-AT-LARGE STETKAR: I'll ask the staff about this later then. Thanks.

MR. HEACOCK: That's something we --

MEMBER-AT-LARGE STETKAR: I understand. I understand the whole reason for doing this is you don't want to perform a station blackout coping analysis.

MR. HEACOCK: Yes, I understand.

MEMBER-AT-LARGE STETKAR: So, you are, basically, trading off the need to perform a coping analysis with putting --

MEMBER SIEBER: A combustion turbine.

MEMBER-AT-LARGE STETKAR: No. Putting pressure on the operators to on paper do things in a very, very short period of time.

MR. HEACOCK: I agree.

MEMBER-AT-LARGE STETKAR: Okay.

MR. HEACOCK: I understand your view.

MEMBER-AT-LARGE STETKAR: That kind of bothers me from an operational standpoint.

MR. HEACOCK: Believe us, it does us, too.

MEMBER-AT-LARGE STETKAR: Well, but, again,

I understand what you're saying, but, still, you have relaxed the start time for the combustion turbine because you need to, because you need to buy a bigger one.

MR. HEACOCK: Yes.

MEMBER-AT-LARGE STETKAR: Maybe the tradeoff is you have to do a station blackout coping analysis.

MR. HEACOCK: Well, and that's where it will drive us.

MEMBER-AT-LARGE STETKAR: That is why I want to ask the staff about that this afternoon a little bit.

MR. HEACOCK: If we exceed 10 minutes, yes, we will have to do a coping analysis; you're correct.

CHAIRMAN ABDEL-KHALIK: How much more time do you need, do you think you will need to finish your part of the presentation?

MR. HEACOCK: I'm just about done.

CHAIRMAN ABDEL-KHALIK: You're done?

MR. HEACOCK: I've basically got one more slide.

CHAIRMAN ABDEL-KHALIK: Okay.

MR. HEACOCK: And then I should be done.

CHAIRMAN ABDEL-KHALIK: Then, you've got your portion. How much more time does STP need to finish

the presentation on Chapter 8?

MR. CHAPPELL: Five minutes, if we don't have more -- you know, depending on the questions.

(Laughter.)

MEMBER-AT-LARGE STETKAR: I don't have much more.

CHAIRMAN ABDEL-KHALIK: All right, let's proceed then. Thank you.

MR. HEAD: I think the rest almost is bookkeeping.

CHAIRMAN ABDEL-KHALIK: Yes.

MR. HEAD: I think we've gotten through the interesting stuff.

CHAIRMAN ABDEL-KHALIK: Okay.

MR. HEACOCK: This kind of gets into the question we had just a minute ago. Station blackout, A4S was basically added, but it was a pointer back to 1 Charlie within the certified design. When the certified design was put together, the station blackout ended up in 1 Charlie.

We are going to be compliant with 50.63, CFR 50.62 for loss of all alternating current. With the CTG, going through with our issues with 10 minutes, we will eliminate the SBO. Again, we may end up doing that,

if it gets to that point. We will get there when we find out what kind of combustion turbine we get.

And then, also, FSAR 19.9, 19 echo addressed some station blackout events, which is along the lines of RCIC, being able to handle an eight-hour duration.

If there are no questions on that, I'm through with mine.

MR. CHAPPELL: All right. I'll finish up some of the bookkeeping here then.

We have talked a little bit about the major departure in this chapter. There is another Tier 1 departure that we referenced in our last session that talks about adding a fourth division of Class 1, 120-volt AC power distribution system that is fed off Division 2. This is for maintenance flexibility.

Other changes related to Tier 1 departures are for consistency; for example, adding a condensate pump trip. We will discuss that departure in Chapter 6.

The changes in this chapter -- of course, we have the dual unit. That note about the dual-unit design is we are looking at minimization of shared systems, and that was an important thing to consider for the electrical distribution system.

Then, we had some revised load changes as well.

COL license information items, there are quite a number in this chapter, a total of 31. They have been addressed by providing certain commitments in place to ensure that the appropriate programs and procedures or procurement specifications contain the requirements that are listed. We don't have any details in here, but this gives you an idea about the types of information that need to be provided to complete the application in this section.

The last discussion is on an ITAAC related to the testing. This was a Tier 1 departure that was mentioned in Chapter 1 and I put up here as a reminder. We did say that we discuss this in Chapter 8. In reviewing the information, we have the people here that would be able to answer any questions you may have on this.

It is a minor change to the ITAAC in that it specifies to the extent practical for testing and also allows type testing by the manufacturer to be incorporated into pre-operational testing. It is more a result-approach to do testing of the electrical distribution system and components.

CHAIRMAN ABDEL-KHALIK: Are there any other

questions for the applicant on Chapter 8?

(No response.)

Before we move to the staff's presentation --

MEMBER-AT-LARGE STETKAR: Said, let me just think about this one.

CHAIRMAN ABDEL-KHALIK: Oh, okay.

MEMBER-AT-LARGE STETKAR: Everybody is aware of the fuse coordination problems.

CHAIRMAN ABDEL-KHALIK: Before we move to the staff's presentation on Chapter 8, I would like to summarize the list of open items that came up during the previous discussion. If you would just go through that list, so that we would have a record of it, and the staff would have a record of it, it would be a good idea for us. Okay? So, would you please proceed with your list, and John will confirm as to whether or not this is consistent with everything that has come up during the previous discussion?

MR. HEAD: An open item is regarding the number of breaker coils available for closure.

The switchyard battery life.

MEMBER SIEBER: This is discharge life --

MR. HEAD: Discharge.

MEMBER SIEBER: -- as opposed to a 10-year

battery or --

MR. HEAD: What I was wondering, though, is that as important now? We discussed the CTG --

MEMBER-AT-LARGE STETKAR: Yes.

MR. HEAD: -- available in the switchyard. Okay.

That is all I had at this point.

What else, Coley, did you have?

MR. CHAPPELL: There was some question about what would happen if we lost the UAT. Were there any other additional items that are needed out of that discussion?

MEMBER-AT-LARGE STETKAR: I'm not sure because what I was hearing is that it doesn't seem that the design is far enough advanced to answer, fully answer, the questions that I had.

I mean the question about losing the UAT was simply an example, so that I could understand what type of switching sequence goes through in terms of feeding buses, either from the RAT or the CTG. What I heard was that the design isn't far enough advanced to answer that question. So, I'm not sure what else to say. I guess, when the design is finished, we would like to hear about that.

MR. HEACOCK: And specifically, the logics. The logics.

MEMBER-AT-LARGE STETKAR: Specifically, I would like to understand what happens. You know, take failure of an UAT as an example.

MR. HEACOCK: Yes.

MEMBER-AT-LARGE STETKAR: But I'm interested in the non-complete loss of offsite power, non-station blackout performance of the electrical system, you know, how it responds to a fault. And pick a fault like a UAT, where you do have both RATs energized, but you will, indeed, have requirements to re-energize some set of PIP buses and the safety buses.

I think I understand what is going on with the safety buses, but the stuff in the middle is where I am really getting confused. That could have implications on the safety buses, depending on --

MR. HEACOCK: Yes, how they are configured.

MEMBER-AT-LARGE STETKAR: -- how it is designed.

MR. HEACOCK: I understand.

MEMBER-AT-LARGE STETKAR: How that actual switching is designed.

We talked about the SBO coping. I understand

there's no item on that. I am going to ask the staff about that, but for you there's nothing.

There is one, though. I would like to have confidence that, remember when we were talking about the offsite lines, I forced you to fail all six lines going north.

MR. HEACOCK: Yes.

MEMBER-AT-LARGE STETKAR: And the statement was made that you thought that, whether you call them Dow or Velasco, the ones going off to the east --

MR. HEACOCK: Right, right.

MEMBER-AT-LARGE STETKAR: -- had enough capacity to feed all of the shutdown loads for all four units. I would like confirmation on that.

MR. HEACOCK: Okay.

MEMBER-AT-LARGE STETKAR: Even if you consider the fault, you know, a beyond-design fault --

MR. HEACOCK: I understand your question. Yes, I understand your question.

MEMBER-AT-LARGE STETKAR: -- I would still like to have some confidence on it.

MR. CHAPPELL: I believe there may have been one more related to a specific question on reserve auxiliary transformer winding, 41.60, but winding --

MEMBER-AT-LARGE STETKAR: That, too, though, depends a little bit on the details on the design, if it only has to pick up a small set of loads. Once I heard some uncertainty about how the actual logic for that switching is going to be performed, some of the other questions become a little bit more nebulous. So, rather than saying I want an answer on something, I'm not quite sure what the question is right at the moment.

MR. HEACOCK: Okay.

CHAIRMAN ABDEL-KHALIK: Jack, is this consistent with your understanding of the open items? Everything is okay?

MEMBER SIEBER: Yes.

CHAIRMAN ABDEL-KHALIK: Okay. All right.

Well, thank you very much.

We will now proceed with the staff's presentation. I understand we have taken, you know, a major chunk of your time. So, what we will do, the published agenda says we will go until 12:15 and then we will take a lunch break. So, at some reasonable point close to 12:15, we will take a break.

MR. MUNIZ: All right. So, this is the staff's presentation on the SER prepared for Chapter 8 of the STP COLA.

My name is Adrian Muniz, Chapter PM. Here with me is Amar Pal, technical reviewer that worked on the chapter, and Neil Fabrega, contractor. This is the staffing developed in the SER.

So, our presentation, we are going to cover the different sections in the STP COLA ranging from the offsite power systems, one site, and a station blackout. We are going to focus mainly on the departures that affected Chapter 8 that are of importance. The onsite AC power system, we will be discussing more of the open item on the DCD diesel room temperature going from 50 to 60 degrees, among other things.

I'm going to turn it over to Amar Pal.

MR. PAL: Hi. My name is Amar Pal.

I am going to talk about this STP COL application. The COL application contains interface requirements, quality assurance items, and other information.

The interface requirements include having two offsite circuits coming into the plant and the voltage and the frequency and the independence of the circuits and the site of the offsite circuits, and the independence and the impedance of the main and auxiliary transformers to match the requirements, and the control tower,

instrumentation in the control tower. Those are the seven items for the interface requirements.

This interface requirement is addressed in ITAAC. They will be verified by ITAAC.

There are a total of 31 COL information items, and staff reviewed all of them. There is some concern with issues, RAI.

Site-specific information, offsite power systems we will discuss later on.

Onsite process for the electrical load, 10 years, and staff is concerned about the detail of rating, whether the total load will still meet the 95 percent of the EDG continuous load. So, staff looked at that and found it acceptable.

SBO coping duration, the STP has an eight-hour SBO coping duration. That is based on the DC requirements. Staff looked at that, whether the eight hours is enough or not, based on Reg Guide 1.155. The requirements --

MEMBER-AT-LARGE STETKAR: Excuse me. I thought I read in the FSAR that there is no SBO coping duration analysis.

MR. PAL: There is not. It wasn't talking about the duration analysis. It is the coping period, how long they have to cope, based on three factors. It

is the EDG classification, EDG reliability, and the offsite power system characteristics.

MEMBER-AT-LARGE STETKAR: So, in that context --

MR. PAL: In that context, you would determine first the eight hours or four hours, that type of thing.

MEMBER-AT-LARGE STETKAR: Thank you.

MR. PAL: And then, coping method is the AC source, and 10-minute AC source coping analysis.

MEMBER-AT-LARGE STETKAR: Thank you.

MR. PAL: So, we looked at that. In Reg Guide 1.155, we find that it is a four-hour coping duration with the STP situation of .975 reliability and EDG classification of A, and worst-case P-T classification gives 24 hours. So, that we felt acceptable in these things.

The COL identified 14 departures. Four of them are Tier 1 departures; Tier 2 start departure, one; and Tier 2, which requires NRC approval, three; and Tier 2 departures, no approval required, six. We went through all these departures and raised the issues as far as necessary.

COL information items are definitely

addressed. We looked at that, and the FSAR for establishing the level of detail. So, as offsite, onsite, and SBO.

The next slide is the offsite power systems. We had one open item. That open item is regarding the applicability of Reg Guide 1.180 for solid-state and digital relays. The staff wrote on that RAI, and in the RAI response applicant stated that they are not going to deviate from the DCD. The DCD already addressed these testing requirements for the EMI, RFI. So, staff finds that acceptable.

And this section could not conclude with all of the items.

8.2, there are four open items. Three of them got enough information that can be resolved. These are, one is the switchyard component testing requirements. So, they have included all the things which should be tested. So, we find them acceptable.

Then, we have an open item issue on the failure events. They had numerous events, and we have some concern about these, whether the events are analyzed properly and corrective action taken or not, and whether they had any loss of the power in the plant. We found that they did not have a loss of safe power, and they did

provide some corrective action taken on some transmission lines.

MEMBER-AT-LARGE STETKAR: Let me interrupt you briefly in that sense. I know that you are doing a review of the license for Units 3 and 4. I know that Units 1 and 2 have a license.

MR. PAL: Yes.

MEMBER-AT-LARGE STETKAR: However, with respect to the offsite power supplies, the applicant is basically taking nine currently-operating transmission lines that are connected to Units 1 and 2 and subdividing those nine, so that they have, I believe, five now that go to Units 3 and 4 with a cross-tie between the Units 1 and 2, and 3 and 4 switchyard, which I view as a cross-tie.

MR. PAL: Uh-hum.

MEMBER-AT-LARGE STETKAR: And they have four lines now that go to Units 1 and 2. To what extent does the staff look at the integrated site situation with respect to offsite power supplies, now that we are going to have four operating reactors at this site?

MR. PAL: Staff concentrated on Units 3 and 4.

MEMBER-AT-LARGE STETKAR: I understand that. I'm asking, to what extent have you thought about the

integrated site?

MR. FABREGA: I have not looked at it.

MEMBER-AT-LARGE STETKAR: Okay. Thank you.

MR. FABREGA: We only knew about the lines that were coming to Units 3 and 4. Therefore, I concentrated on that.

MEMBER-AT-LARGE STETKAR: Okay.

MR. FABREGA: I didn't even consider the possibility or the actual changes that were going on into the other units. That, obviously, wouldn't affect the other unit possibly. Okay?

I cannot make conclusions about the other units. I fully understand your question, if this is going to be an integrated thing. We probably ought to look at that.

MEMBER-AT-LARGE STETKAR: My concern is that suppose I add now four more units to the same site with the same nine transmission lines connected to it, and for each pair of units that I add, the staff only looks within the confines of the little box that I draw around those two units. At some point, one would think that it would be useful to step back a bit and look holistically at all four units.

I'm sure that -- well, I will stop there.

I don't want to speculate about anything.

(Laughter.)

MR. PAL: Sure. The only comment I could make is the NRR should look at the change, just to Units 1 and 2, and what's the impact of the offsite power system situation for their units.

MR. WUNDER: Yes, I think NRR is getting close. But when you make any kind of a change, anything that is described in the FSAR, you have to do an analysis and you have to determine if it causes a new or different kind of accident. You've got to determine if it causes an unresolved safety issue. If they do, then they have to come to us and we have to amend the license. So, these things aren't done in a vacuum.

MEMBER-AT-LARGE STETKAR: Have they done that for Units 1 and 2?

MR. WUNDER: In this instance, I don't know. I will ask that.

MR. HEACOCK: It's preliminary at this point in time. We will have to go through, like he was saying, we have to go through the 50.59 process for this site and look at the changes and the effects.

The actual changes won't be in effect for some time, but, yes, we are looking at that ahead of

time. Otherwise, we would not have actually gone to the design that we have that we showed to ensure that we did not have a situation that really lessened the reliability of the offsite source.

MR. HEAD: But we are expecting not to need an amendment to do this or, if we thought that was likely at all, then we would be not doing this design. Because Units 1 and 2 have to maintain their licensing basis, design basis integrity. That is crucial in all our thinking, is 1 and 2, and the switchyard is, obviously, a significant part of that.

So, we have looked at it holistically, even though it is 50.59 in one set of units and a COLA in the other set.

MR. HEACOCK: We also have a process in place that looks at -- we call them interface evaluations. So, any effects from 3 and 4 back on 1 and 2, so we identify from there, and then we take them into the 1 and 2 process.

MEMBER-AT-LARGE STETKAR: The reason, I mean other than kind of a generic concern, specifically, the reason I kind of looked at this is from this perspective of Units 3 and 4 -- and I know nothing about the licensing of 1 and 2. So, from the perspective of Units 3 and 4, if I go back to that north set of tower lines, you, basically,

say that the east tower and the center tower are not independent in Units 3 and 4. The west tower is your second independent.

MR. HEACOCK: Right.

MEMBER-AT-LARGE STETKAR: That tower, as I understand it, contains two transmission lines for Units 3 and 4. The east and the center towers contain all of the Units 1 and 2 transmission lines in that corridor. You lose that. Now you're single, and you are down to one transmission line from Velasco for Units 1 and 2.

MR. HEACOCK: On the center towers, we have one line. We do have one transmission line going up. We have three lines total.

MEMBER-AT-LARGE STETKAR: Well, you don't take credit for Hillje --

MR. HEACOCK: The Hillje, correct. Correct.

MEMBER-AT-LARGE STETKAR: Hillje, I'm sorry. That's on the center --

MR. HEACOCK: Yes, the center tower.

MEMBER-AT-LARGE STETKAR: -- the center tower. The center tower has got Hillje and Elm Creek.

MR. HEACOCK: Yes.

MEMBER-AT-LARGE STETKAR: And the east tower has got Elm Creek 18 and W. A. Parish on the 30 --

MR. HEACOCK: Right.

MEMBER-AT-LARGE STETKAR: And Parish and Elm Creek and Hillje 64 are Units ½ lines.

MR. HEACOCK: Correct. You are correct, yes.

MEMBER-AT-LARGE STETKAR: So, if they go out, you are down to the one Velasco 18 line to feed Units 1 and 2?

MR. HEACOCK: Yes.

MEMBER-AT-LARGE STETKAR: Okay. Which is why I am back to, how many lines can feed --

MR. HEACOCK: And the cross-tie. And the cross-tie between 3 and 4, and 1 and 2. So, we actually have those two.

MEMBER-AT-LARGE STETKAR: Yes. Okay.

MR. HEACOCK: So, we are not down to one. We are down to two.

MEMBER-AT-LARGE STETKAR: We have spent enough time on this. I think we all understand where we are.

CHAIRMAN ABDEL-KHALIK: Okay, please continue.

MR. PAL: So, the other open item talked about the communication protocols between the STP and

the transmission operator during the risk-sensitive maintenance activities. So, they gave us that protocol. So, we found that acceptable.

The only open item is regarding the cable testing, which are susceptible to moisture. We are working with the applicants to resolve the issue.

On the specific item of interest, supplemental information on the transmission lines, which in their description in the main part I think these are discussed very detailed by STP. I think I don't have much to add on these, except these main transformers are three single-phase transformers. Three single-phase transformers, each we gave 537.5; total, 1612.

Another thing in here before is the built-in contingency analyses, which are in the voltage level at the switchyard. If the voltage is below a certain level or not within the allowable limits, they are going to inform the STP operator to take action on that.

CHAIRMAN ABDEL-KHALIK: I wonder if this would be a good point to stop, and we will continue with Section 8, onsite AC power system, after lunch.

MR. PAL: I believe so. I believe so.

CHAIRMAN ABDEL-KHALIK: All right. So, at this time, we will recess for lunch. We will be back

at 1:15.

(Whereupon, the foregoing matter went off the record for lunch at 12:18 p.m. and went back on the record at 1:15 p.m.)

A-F-T-E-R-N-O-O-N S-E-S-S-I-O-N

1:15 p.m.

CHAIRMAN ABDEL-KHALIK: At this time, the staff will continue their presentation of Chapter 8. Please continue.

MR. PAL: Good afternoon.

We want to start with Chapter 8.3.1, Onsite AC Power System. That section, we have two open items. One of them can be closed based on the additional information.

We received that regarding an isolation device for I&C site PIP, and the applicant agreed to have some testing done based on vendor recommendations. So, based on that, we can close that item.

The open item that is still there is the diesel generator room temperature. In our original RAI, they said the coolant would be qualified for that temperature. If it can't be qualified, then that will be relocated in a separate room. But they also said that the coolant qualification will be based on Section 3.11. Section 3.11 has the room temperature indicated in the DC as 50 degrees. It is not 60 degrees. So, they are going to revise that table to make the 60-degree temperature, and that's what the open items are about.

MR. TONACCI: Excuse me a second. Does that address the open item that we had --

CHAIRMAN ABDEL-KHALIK: Not fully. I guess we talked about that before. It is not only the testing that has to be done at 60 degrees to verify the performance of the diesels. We talked about the capacity being sort of oversized to compensate for the increasing inlet air temperature.

MR. TONACCI: Right.

CHAIRMAN ABDEL-KHALIK: But we also had a concern about the operators.

MR. TONACCI: Exactly right, and that will be in Chapter 9.

CHAIRMAN ABDEL-KHALIK: Okay.

MR. TONACCI: That part, we will defer to Chapter 9.

CHAIRMAN ABDEL-KHALIK: Okay.

MR. TONACCI: But, as far as equipment, are we done with that piece of it or is there more that you want to hear?

MEMBER-AT-LARGE STETKAR: The machine has to be tested.

CHAIRMAN ABDEL-KHALIK: If they are going to qualify it to 60, then --

MR. TONACCI: Yes. Yes, we are. Then, it should be okay.

CHAIRMAN ABDEL-KHALIK: But we will just wait to see your response to the question with regard to Chapter 9.

MR. TONACCI: Okay.

MR. HEAD: With regard to the operators?

CHAIRMAN ABDEL-KHALIK: Correct, yes.

MR. HEAD: Okay. Jay spoke to that some last -- Jay Phelps, the Operations Manager, spoke some to it last time we were here. So, you would be needing --

CHAIRMAN ABDEL-KHALIK: We will revisit it when Chapter 9 is looked at.

MR. HEAD: Okay. All right.

CHAIRMAN ABDEL-KHALIK: Just a heads-up here.

MR. HEAD: Okay.

MR. PAL: The next slide, I think STP talked about that in the things about this Departure 8.3-1, all these, 10 years, and the rating of 10 years for --

CHAIRMAN ABDEL-KHALIK: Hold on a second. We need to stop this noise.

(Laughter.)

Okay, we're back on.

MR. PAL: As I said before, this Departure 18.1 was discussed extensively by the STP. So, really, we can skip that.

This rating change, voltage change, and the rating change, and motor change. The Departure 2.12-2, also additional division for power supply for I&C circuits which is non-interruptible. It is an interruptible power supply. So, we have some concern about this, what happens to the 10 minutes for CTG to come up and losing power for that site. But this division is not important. This is not uninterruptible power supply. They can tolerate the loss of power for 10 minutes. So, based on that, we found this acceptable. It is an enhancement.

Next is 8.3.2, DC Power System. Really, there is nothing much changed on this section. There is one open item, which is already discussed in 8.2.1 because that same item is applicable here. That is important here, too.

The next is station blackout. This ABWR design is going to cope with some blackout with an AAC power source, which is CTG which will be available within 10 minutes.

The DCD had the requirements as well as the

Reg Guide, and the rule requires that you have to demonstrate that the CTG can be connected to the safety process within 10 minutes. The applicant made that comment. They have that in the DCD also and in their writeup, that the safety process will be energized within 10 minutes.

MEMBER-AT-LARGE STETKAR: Let me ask you, because I asked the applicant this. How do you have any assurance, if the requirement is that the CTG shall be up-to-speed and at voltage in less than 10 minutes, and according to acceptance criteria, that means to me 9.9999 minutes is acceptable, but, indeed, human beings can perform all of the required manual switching operations in .00001 minute.

MR. PAL: Yes, exactly the same concern we had. We had an RAI on that. Finally, we agreed that they have to do a test, an initial test, to show that this can be done. So, we are counting on the test.

MR. FABREGA: I think Reg Guide 1.155 requires that they demonstrate by test that they can --

MR. PAL: Connect.

MR. FABREGA: -- connect within 10 minutes.

MEMBER-AT-LARGE STETKAR: Okay. Including all --

MR. PAL: Including the bus and whatever,

all the operator actions. These are not automatic. This will be done manually. So, all these things together, and not just the bus. That is the key thing here, the keyword, not just the safety bus within 10 minutes.

MEMBER-AT-LARGE STETKAR: Yes, you don't necessarily have to start the loads from the safety bus.

MR. PAL: That's right, not the load.

MEMBER-AT-LARGE STETKAR: But you need to have 4.16 kV on that bus.

MR. PAL: Yes. Exactly. Yes.

MEMBER-AT-LARGE STETKAR: And the implication is such that you can start loads at that time.

MR. PAL: Absolutely. Absolutely. So, the test is the only thing which would verify that, yes, in fact, it can be done. And that is the same concern we had. We talked about that; less than 10 minutes could be 9.99.

MEMBER-AT-LARGE STETKAR: I mean that's all acceptance criteria is --

MR. PAL: Absolutely.

MEMBER-AT-LARGE STETKAR: -- 9.99 is fine.

MR. PAL: Exactly. That's less than 10 minutes.

MEMBER SIEBER: I think we have to wait and see what the startup characteristics are. My experience, that is actually a pretty small combustion turbine as far as peakers, peaking units go. My experience with them is that they start up pretty fast.

MEMBER-AT-LARGE STETKAR: They may, Jack. I'm just a bit concerned about the fact that if, indeed, the logic automatically re-energizes the 4-kV non-safety buses, then the operators not only need to connect something that is running at voltage unloaded to a dead bus, they need to undo a bunch of things that have already been done automatically. That takes a little bit of time and thinking.

MEMBER SIEBER: It's not a little thought.

MEMBER-AT-LARGE STETKAR: That's right.

MEMBER SIEBER: It's the thought that takes the time.

MEMBER-AT-LARGE STETKAR: That takes the time. If, indeed, it was just up and running idle unloaded, and all they had to do was close the output breaker, that is the easy way to do it.

MEMBER BROWN: Maybe if we are talking the safety buses and the CTGs, let me bring up this one point. I mentioned this to you prior to re-engaging here.

In this 10-minute requirement, in the SER when you are talking about Departure 8.3-3, you all brought up the fact that the Division 1, Class 1E, and the rest, I guess it is Division 1, Class 1E, the bus supplies power to three groups of non-Class E, 1E, fine motor control rod drive motors. Those motors are used as backup for scram for driving in everything.

So, I guess you were talking about 10 minutes, but this says the priority for that bus is to have the diesel start up, and that's the first choice. That was in your SER writeup on this thing. I have forgotten how you phrased it.

It said, "It is important that the first available power supply or standby power be available for the motors. Therefore, a diesel-supplied bus was chosen as the first source of AC power. In a combustion turbine, supplied PIP bus is the second back-up source."

So, if you had loss of all power and you need the fine motor control rod drives, you don't have them if you said the CTG starts up and brings power into these buses. And you said you do not start the diesels.

Well, how come? That seemed to be a dichotomy, and I don't know whether I've got the flavor right. You need the fine motor control rod drives, but, yet, that

diesel has got to start.

MR. HEACOCK: Yes, and it will.

MEMBER BROWN: But will it be started just because you scram -- presumably, if you lose all power, you scram now, correct?

MR. HEACOCK: Yes.

MEMBER BROWN: That's the way my plants were.

MR. HEACOCK: Don't get me into the scram. Let me go straight from the loss of offsite sources.

The under-voltage relays on the safety-related bus will send a signal to the diesel generators in each division and start that diesel generator. That is No. 1.

The combustion turbine is there as a backup in case the diesel generator does not start and pick up the bus. Then, you have the combustion turbine generator source to pick up that bus at a point in time after it comes up-to-speed.

MEMBER BROWN: Another part of your all's writeup, I've just looked at the FSAR. It says the CTG comes on first, and the diesels don't start. I mean, did I read that wrong?

MR. HEACOCK: Yes, I think you might have that wrong because the diesels are required --

MEMBER BROWN: So, they will start under those circumstances?

MR. HEACOCK: Correct. Correct. They are required to --

MEMBER BROWN: The only time you have to connect the CTG to those Division 1E buses is if the diesels become unavailable or fail to start?

MR. HEACOCK: Correct. The CTG is the backup to the diesel generator.

MEMBER BROWN: Okay. All right. I'm fine then.

MR. HEACOCK: Okay.

MEMBER BROWN: Thank you.

MR. HEACOCK: Uh-hum.

MR. HEAD: Can I follow up, though? This question you alluded to, do we need to see as more design detail or something? Is that a follow-up item? Or what exactly --

MEMBER SIEBER: No, I don't think we need to see that, but I think that is the ultimate --

MEMBER-AT-LARGE STETKAR: I think our concern is that we want to be sure that the staff really looks at this issue carefully because the 10-minute startup requirement for the CTG, coupled with at least the possible

confusion about how the design is actually working automatically and manually, leads to the impression that the operators may not have very much time to actually connect power to the Class 1E bus from a source that won't be overloaded when they start that first load.

In other words, and as I said, I'm more concerned about the fact that the CTG may be picking up things automatically that the operators need to undo before they can actually close the output breaker, and that whatever the demonstration, whatever tests or process you use to confirm that this can be done is not simply limited to the fact that, okay, the CTG is up to voltage and all the operator needs to do is close the output breaker, because that is not correct.

MR. PAL: Exactly. That is not correct.

MR. HEACOCK: Right. So, you have to shed a bus.

MEMBER-AT-LARGE STETKAR: You might need to shed buses.

MR. HEACOCK: Yes, that's the intent, to shed buses.

MEMBER-AT-LARGE STETKAR: That needs to be carefully considered in that time.

MEMBER SIEBER: The discussion really went,

we talked about where that procedure would go; decided, hopefully, that it would be in the EOPs. And it was my desire that staff look at the EOPs to see how complex that was. I don't know that we need to look at them. I would feel more comfortable if I saw them, but I don't think you're obligated to give them to me because that is pretty detailed.

MR. HEACOCK: I'm just thinking that, as part of the --

MEMBER SIEBER: On the other hand, to say with certainty that this would work, you need to know the starting interval and what the procedure looks like, and some kind of human factors analysis that would say an operator could reasonably do --

MEMBER-AT-LARGE STETKAR: There's guidance for looking at the amount of time available to do something and the amount of time that is required to do something with some margin to compensate for operator delays or confusion, or whatever. I mean there are methods to do that that people use in the passive plant designs, for example, to look at manual initiation of safety functions.

That same type of process in an analytical sense would seem to apply here, where you are not quite -- I mean maybe you are certain about how long it takes the

CTG to start up and reach voltage, but there is some uncertainty about that. It isn't going to be a minute.

MR. HEACOCK: No. No, it's not.

MEMBER-AT-LARGE STETKAR: It's probably not going to be 9.9999 minutes.

(Laughter.)

MR. HEACOCK: No, it's not.

MEMBER-AT-LARGE STETKAR: But somewhere between there.

MEMBER SIEBER: It might be two or three minutes.

MEMBER-AT-LARGE STETKAR: It might be two or three or four or five.

MEMBER SIEBER: My feeling is, for the staff to say this is okay, they need to look at the starting time tests, EOPs, and some analysis --

MEMBER-AT-LARGE STETKAR: That's right, yes.

MEMBER SIEBER: -- of human factors implications as to whether they can complete the actions with reasonable accuracy in the amount of time that is allowed.

MS. BANERJEE: Is there an ITAAC that could be referenced?

MR. HEACOCK: I don't believe we have one presently. It is the test program that basically, like we said on the RAI, that we basically committed to doing.

We will have to show this from a standpoint of like you're saying, from the standpoint that CTGs come up-to-speed and the operator has enough time to actually shed buses and then close the breakers to repower the bus to start, to be within that 10-minute timeframe. Because we all recognize that we are up against a timeframe. We don't know what we are actually going to get. Therefore, we are going to go through this and look at this.

But there was not an ITAAC space that we had that in.

MEMBER-AT-LARGE STETKAR: Where would the staff follow up on this? Where and when? And, yes, I'm talking process.

MR. PAL: There is no open item on it, no open item, because we, staff, believe that all the documents require that you have to have a test done, and tests should verify that 10 minutes is achievable. Based on that comment, then, verification, staff believes that should be adequate.

MS. BANERJEE: Is there a confirmatory item on this?

MR. FABREGA: No.

MEMBER SIEBER: The question is, since you have offsite power from multiple sources, and you have diesel generators, is this combustion turbine required or just a really nice backup to have? If it is required, then you have to do this work. If it is just a really nice backup to have, you probably don't have to do all the work. On the other hand, it would be foolish to spend all that money and not do the work.

MEMBER-AT-LARGE STETKAR: Well, we have not asked, I mean I think Maitri asked the pertinent question. You have mentioned a test to demonstrate that, indeed, this would be done. Where is the commitment to perform that test documented?

MR. HEACOCK: I have to try to remember off the top of my head.

MEMBER-AT-LARGE STETKAR: She asked, is there an ITAAC? Okay, well, if there's not an ITAAC, where is the commitment to perform that test?

MR. HEACOCK: Yes, that's what I'm trying to remember.

MEMBER-AT-LARGE STETKAR: So that even the staff has it as a potential audit item, if it is the first COL audit.

MS. BANERJEE: And a confirmatory item to the SER is necessary, right?

CHAIRMAN ABDEL-KHALIK: This is a CTG start test?

MR. TONACCI: I think the question is pretty clear: how do we make sure the operator has the time he needs to safely energize these buses?

MEMBER-AT-LARGE STETKAR: That's right. And if, indeed, if the staff, at least at the COL phase, is saying that you are happy that you have enough commitment from the applicant that they are going to do a test to demonstrate that capability, okay, I personally could live with that. I don't have to.

But I think that we would like to be comfortable that there, indeed, is an actual commitment to perform that test, so that the staff can later follow up, if it is a later followup.

MR. TONACCI: I agree. I think your question is a very good one. Let's go back and do some homework and correct this as an open item. We will close it, hopefully, next session.

MEMBER-AT-LARGE STETKAR: Good. Thank you.

MR. FABREGA: Can I interject something here? If they are going to meet 10 CFR 50.63, then they need

to make sure that either they have a unit CTG, an alternate AC that is capable of coming to speed with being loaded, capable of being loaded in 10 minutes, or they have to perform a coping analysis. Okay?

So, their commitment is to 10 CFR 50.73. So, if they do meet that commitment, then it is a moot point.

We can follow up, but it is only if they don't meet the 10 minutes. Then, they either have to perform a coping analysis or they need to -- or they are not meeting 10 CFR 50.63.

CHAIRMAN ABDEL-KHALIK: But the question is, how will the staff keep track of that commitment? That is the issue at the table right now.

MEMBER-AT-LARGE STETKAR: 50.63 commitment, we are still talking about that tracking issue.

MEMBER SIEBER: Right.

CHAIRMAN ABDEL-KHALIK: Let's just move forward, please.

MR. PAL: In this section, we have one open item. The open item is exactly to the SBO procedures. They committed to comply with that guidance, guidelines of NUMARK, which requires three procedures. One is the SBO procedure. One is the offsite power procedure. The

other one is the weather procedure. So, they are going to follow that. So, this open item can be closed.

The next slide is the staff findings. Staff thinks that there is sufficient information provided on the offsite power system, including interconnections and reliability and stability.

Finds that sufficient details about all site-specific safety-related load increase to EDG so that the maximum expected -- we talked about that. We did 95 percent of the continuous rating of the EDG.

We find that the safety-related buses have three supplies. One is from UAT, and one is RAT A, and the other one is RAT B. So, we have two alternate offsite power sources, but they cannot achieve as the alternate power source because of some limitations of the separation.

Then, we have the EDG connection and the AC source connection.

Two of the three divisions are normally fed from the offsite normal power source, and the power going from alternate offsite power source we discussed before. Loss of transformer; one bus still gets power from the alternate power source, offsite power source.

The SBO, they have the AAC power source with seven days of fuel capacity. And additionally, one other

point here, they have a battery capacity for eight hours as a backup. So, this ABWR design has two methods of coping, battery coping and AAC power source coping.

And on top of that, because of the two units together, they have two alternate AC power sources on the existing plans, with two on each side. You will recall only one AAC power source because you don't assume both units in the station blackout at the same time. So, that way, it is also an additional feature. We can consider that.

MEMBER-AT-LARGE STETKAR: You'll be sorry you mentioned that.

(Laughter.)

Does each combustion turbine have sufficient capacity to power all the safety loads -- let me not say, "all" -- the necessary safety loads on both units simultaneously? In other words, if I'm down to one combustion turbine generator, can I --

MR. PAL: I believe so because it is --

MEMBER-AT-LARGE STETKAR: I don't believe anything.

(Laughter.)

I'm going to ask the applicant to answer this one.

MR. HEACOCK: Basically, we have sized the CTG to be able to handle two safety divisions in the unit. You only need particularly generally just one safety division to shut down and stay shut down. So, yes, you could have one unit and one on the other unit, power at the same time.

MEMBER-AT-LARGE STETKAR: At the same time?

MR. HEACOCK: Cross-tie. We didn't get into talking about this cross-tie, but we do have a --

MEMBER-AT-LARGE STETKAR: Right, right. But, I mean, since the staff brought it up, I thought I would ask

MR. HEACOCK: Yes. That was the intent.

MEMBER-AT-LARGE STETKAR: So, it has got sufficient capacity for two safety divisions?

MR. HEACOCK: Yes.

MEMBER-AT-LARGE STETKAR: Two safety buses?

MR. HEACOCK: Yes.

MEMBER SIEBER: It could be one of each.

MEMBER-AT-LARGE STETKAR: It could be one and one; it could be two and zero. But, you know, with the common switchyard and the offsite power alignment, it is quite likely you are going to lose offsite power to both units at the same time now.

MR. HEACOCK: Yes.

MEMBER-AT-LARGE STETKAR: You still have the six diesels.

MR. HEACOCK: Six diesels and then two combustion turbines.

MEMBER-AT-LARGE STETKAR: And one more combustion turbine. You're starting to get pretty small here, but it is another level of assurance, though --

MR. HEACOCK: Yes, right.

MEMBER-AT-LARGE STETKAR: -- that, indeed, with the size of the turbine that you have installed, you can, in real extremist --

MR. HEACOCK: Correct.

MEMBER-AT-LARGE STETKAR: -- power one bus on each. So, that's good.

CHAIRMAN ABDEL-KHALIK: Please continue.

MR. PAL: Okay. We have eight open items and six currently closed. For two, we are still working. And that's about it for staff.

CHAIRMAN ABDEL-KHALIK: Okay. Well, thank you.

Go ahead.

MEMBER BROWN: I have one other question.

CHAIRMAN ABDEL-KHALIK: Yes, sir.

MEMBER BROWN: You mentioned on page 8-19, you were talking about the underground cable for Dow line 27. You brought up the issue of buried cables are presently an item of interest. You asked what programs did they have to avoid or arrest degradation of the cable insulation. Their response was that it is a cross-linked polyethylene metallic shield, and it is installed in duct banks, and that it is also qualified for submergence.

Then, you went on to say you found that acceptable because it is reasonably protected against moisture, potential moisture in the underground trench, and therefore, it should be okay.

Now I got the flavor that this was -- is this really submerged all the time? That is the question. Is this really going to be under water? I don't know what the water level is, the underground water level is. But in the duct bank and trench --

MEMBER-AT-LARGE STETKAR: This much overgrade.

(Laughter.)

MR. HEACOCK: We have a very high water table.

MEMBER BROWN: That is what I thought.

MR. HEACOCK: And there is a very good chance it will be submerged, but the cable is designed for

continuous submergence.

MEMBER BROWN: Okay. My next question is -- I'll take you on that -- but now, if it is going to be submerged, is there a standard by which you qualify these for the 40 to 60 years that it may be in operation?

MR. HEACOCK: This does not fall, to kind of separate, this does not fall under the plant's requirement. This is part of the transmission requirements, No. 1. This is not our cable. It is offsite.

And as far as the long-term viability of that, that falls on the transmissions and falls under their requirements and their standards for what they need to make sure.

What it is, it is submarine cable. It will have a qualified life. Off the top of my head, I don't know what that life is, although we can chat with the transmission company to find out exactly what that is.

MEMBER BROWN: That would be of interest, just to know what the time is. I mean I went back and read some more after I came up with the question and found I guess this is only one of a number of cables, of sources.

MR. HEACOCK: Yes, it is one of a number of sources. This is also a high-voltage cable, not a

medium-voltage. The interest is really on medium-voltage within the plants themselves that are not designed for continuous submergence.

MEMBER BROWN: Well, yes, I understand that point.

MR. HEACOCK: Yes.

MEMBER BROWN: But even a high-volume unit, what is it, 345-kV cable?

MR. HEACOCK: Three hundred and forty-five-kV line.

MEMBER BROWN: Okay. That's nice to have under water.

MR. HEACOCK: Well, I'll tell you, we put them in all the places, actually.

MEMBER BROWN: That's fine. I just would like to know what kind of characteristics or what type of lifetime qualifications that it has got.

MR. HEACOCK: Okay.

MEMBER BROWN: Even though it is not yours, I guess.

MR. HEACOCK: Yes, it is not ours, but we --

MEMBER BROWN: You have to live if it fails.

MR. HEACOCK: Correct. We can talk to the transmission and find out what that is.

MEMBER BROWN: Okay.

MEMBER-AT-LARGE STETKAR: Evan, you did say, though, it is a qualified submarine cable?

MR. HEACOCK: It is designed for continuous submergence, correct.

MEMBER SIEBER: That's different than qualified submarine cable.

(Laughter.)

MR. HEACOCK: Yes.

CHAIRMAN ABDEL-KHALIK: At this time, I would like to --

MEMBER BROWN: My submarine cables are qualified for submarines, but they are not submerged all the time.

(Laughter.)

CHAIRMAN ABDEL-KHALIK: Before we move on to Chapter 16, I would like to again go through the process with the staff of capturing all the open items that came up during their presentation.

MEMBER SIEBER: I would like to ask a question on Chapter 8. When I reviewed that, there was one open item that was not resolved at the time the SER was written. It had to do with the reference to the code for solid-state relays and protection devices, and referred to EMI and

RFI interference. The code that was referenced did not discuss that because it probably wasn't an issue with the old mechanical relays.

But having personally experienced EMI issues and RFI issues with solid-state protection systems, I would like to know how that open item was resolved.

MR. PAL: We talked about that in the beginning. They are staying with the DC requirements, the BWR DCD duality. They indicated that they are going to do a second test by IEEE standards, which are included in the Reg Guide 1.180. Since they are not taking any departure from the DCD, we accept that.

We've got it addressed already in the Chapter 7, 7(a) I believe.

MR. HEACOCK: Let me add one other item to that. As part of our overall qualifications, like you said, Chapter 7, we did invoke an electromagnetic compatibility standard that we would have to meet for all of our safety-related devices, electronic devices, not only in the I&C process, but also the electronics for power. We are invoking that through --

MEMBER SIEBER: That goes into protective relaying?

MR. HEACOCK: Protective relaying. It will

go for any of the safety. We are invoking that in our specifications to make sure that they follow that.

MEMBER SIEBER: Now, well, I guess that answers my question. From a regulatory standpoint, having had an interest in this for over 20 years, I have learned that as recently as last year there are still issues because solid-state protection relays in other devices used to protect electrical systems are so fast, that coordination sometimes becomes a problem.

In other words, you end up with a race of things going on, and sometimes you get locked out. Has that been an issue? Do you plan to look at it, either through design space or by testing, to make sure that that is not a possibility with the protection schemes that you set up in your switchyard and your vital buses, and so forth?

MR. HEACOCK: Well, there being a big difference between what we will do in the plant itself for the safety compared to what we do in the switchyard, but looking at the safety first, yes, it will be an issue. We have to look at coordination of all of our devices, make sure we don't get in a relay race, that something upstream trips before the downstream devices have a chance.

MEMBER SIEBER: That's right.

MR. HEACOCK: So, that is just practical coordination. You are correct, these things are a lot faster. But we will look at them, make sure that the coordination does exist.

MEMBER SIEBER: Yes, there seems to be more surprises these days than there were when I started in --

MR. HEACOCK: You're correct. They are very sensitive to certain harmonics. They haven't got necessarily all the harmonics worked out of them. The new ones that we are looking at will have a much better situation, but sometimes they do have some --

MEMBER SIEBER: Well, one other thing I would point out is that, for example, the power supply buses that feed the power to operate these devices, sometimes they are a contactor for other devices on that same bus, the contactor itself being a big inductive device, and the contacts that open and close in time will give you big spikes --

MR. HEACOCK: Yes.

MEMBER SIEBER: -- in harmonics that, for example, can reset the counters and timers to zero, and do other things like that. So, that sometimes they will lock out on their own because some relay down the road that you probably hadn't even thought of, a contactor

opened or closed when you weren't planning on that to happen.

I would think that, when you try all this stuff out, periodically, you would look at the wave shapes on the bus to make sure that you aren't getting some wild spikes on there.

MR. HEACOCK: You are correct, from other devices causing inductive kicks or passive kicks even --

MEMBER SIEBER: Right.

MR. HEACOCK: -- that throw your signals. That will end up being generally -- I am going to say it is very generally, as when we do operate, we will look at that from the testing standpoint to make sure.

MEMBER SIEBER: Right.

MR. HEACOCK: But, specifically, sitting down and trying to look for those inductive items, those are usually hard to find. And like you're right, there's something there that --

MEMBER SIEBER: It's not always there.

MR. HEACOCK: Yes.

MEMBER SIEBER: But when it's there, it is bad.

MR. HEACOCK: And one of the items, and this goes for especially our existing units, we do put in

shorts, you know, diode-resistant-type shorts, to knock off those off the relays that do produce those typically.

MEMBER SIEBER: Super. That will do it.

MR. HEACOCK: Yes.

MEMBER SIEBER: Okay. Thank you.

MR. HEACOCK: Uh-hum.

CHAIRMAN ABDEL-KHALIK: Would you like to go for the open items list, so that we can confirm before we move on to --

MR. WUNDER: Yes, sir. At this point, I think STP, before the break, went through all the ones that applied to them.

CHAIRMAN ABDEL-KHALIK: Yes.

MR. WUNDER: So, just from this afternoon's session, we are still looking at the issue of diesel generator room having an ability which is going to be addressed in our Chapter 9 presentation. Our big issue is how is the staff confident at this point at the licensing phase that, when the plant is operational, they will, in fact, be able to meet the requirements of 50.63 and power these safety buses with the CTG within 10 minutes.

I'm not clear. Are we good with the submerged cable issue?

CHAIRMAN ABDEL-KHALIK: Yes. Yes. That's

closed.

MR. WUNDER: Yes. Okay. Then, those are two remaining issues.

MR. HEAD: I thought we owed you the --

MEMBER BROWN: The qualification, yes, whatever the lifetime.

MR. HEAD: We will keep that one.

MEMBER BROWN: Yes, that is the only thing.

MR. HEAD: Okay.

MEMBER BROWN: How is it qualified, and what's the lifetime?

MR. HEAD: Yes.

CHAIRMAN ABDEL-KHALIK: Jack, John, is there anything else in addition to this?

MEMBER SIEBER: No.

MEMBER-AT-LARGE STETKAR: No.

CHAIRMAN ABDEL-KHALIK: Thank you.

MS. BANERJEE: Is there a question on staff review of all four units for the whole entire electrical system?

CHAIRMAN ABDEL-KHALIK: I think that is addressed as part of --

MS. BANERJEE: John raised that.

CHAIRMAN ABDEL-KHALIK: -- 50.59 that you

would have to do for Units 1 and 2.

MR. HEACOCK: Units 1 and 2, our interface, correct, and our tie-back to regulations.

CHAIRMAN ABDEL-KHALIK: Right.

MS. BANERJEE: Okay. Thank you.

CHAIRMAN ABDEL-KHALIK: At this time, we will move on to Chapter 16 presentations.

MR. HEAD: Okay. We will go on to Chapter 16 now.

CHAIRMAN ABDEL-KHALIK: Please proceed.

MR. HEAD: Okay. The standard agenda, and here are the attendees we have with us today that can help us with our presentation. We will focus on Steve Cashell, who we will say is our tech spec expert. I will turn this over to Steve.

MR. CASHELL: Okay. Well, thank you for inviting me, Mr. Chairman and members.

My name is Steve Cashell, and I have been with this project since it began with STP 3 and 4. I have a bachelor's degree in chemistry from Kenyon College. Following that, I served my period in the Naval Nuclear Program as an officer, a qualified engineering officer.

I spent the next 32 years in licensing, operations, and compliance of operating plants, and about

the last 20 years on BWRs primarily. I have been heavily involved with tech spec work, including the writing and the project management of some of these ITS conversions that have occurred.

Prior to coming to this project, the previous six years, I was a BWR Owners Group Subcommittee member on both the Risk-Managed Tech Specs and the Tech Specs Issues Coordination Committee.

Our tech specs were developed using NUREG-1434, which is a BWR 6 tech spec, standard tech spec. So, we used Rev. 0. That is what was being written at the same time our certain design was being certified.

And that is for all the specs except for the containment specs, the inerting and the drywall issues. For that, we followed NUREG-1433, which more closely resembled what we have.

The EBWR tech specs are in the full, improved standard tech spec format. The only difference is we are Rev. 0, approximately. We have made some improvements since then, and you will see what we are going to do in the future.

The contents, of course, are the standard use and application safety limits, limiting safety system settings, conditions for operation, surveillance

requirements, design features, and admin controls.

We have many departures, but they can be broken down into these four categories. There are six Tier 1 departures that affect the tech specs, nine Tier 2 design-related departures. There are eight Tier 2, I call them, non-design-related departures. They can't be categorized as editorial. So, they are in that category.

And the remainder is supplement, correct, and clarify information between the tech specs and the bases, provide consistency between the tech specs and the bases, other editorial in nature.

All the tech spec and tech spec bases departures require prior NRC approval.

The Tier 1 departures that affect tech specs are as follows:

The MSIV closure and scram on high radiation removes the high-rad scram and isolation functions from the tech spec, from the tables.

Feedwater line break mitigation, we actually added feedwater line break mitigation functions to the tech specs.

The RCIC turbine/pump departure, that simply changes the name. It was a turbine exhaust diaphragm

pressure. They don't have a diaphragm in the exhaust. So, it is turbine exhaust pressure.

I&C power divisions, that adds new Division 4, 120-volt distribution panels to the basis for 3.8.9 distribution systems.

Hydrogen recombiner elimination, that removes a hydrogen recombiner, and it downgrades the hydrogen/oxygen monitor functions, so they get removed from the tech specs.

The safety-related I&C architecture, that revises a lot of the I&C nomenclature in some of the design descriptions.

The design-related departures mostly affect the bases of the tech specs, except for, well, the first one, containment analysis. It revised P sub A, the calculated peak containment pressure.

Then, the next one, the more contentious one, is the RCS total and unidentified leakage rates. We have obtained the information from K6, K7 on that, but we haven't really absorbed and learned how to use their tech specs. Their tech specs aren't formatted like ours are. We are not exactly sure yet. So, we are still trying to get that for you.

Then, the rest of these affect the bases.

Oh, I'm sorry. ADS electrical interface, that just clarifies that there are three divisions in the control logic versus four.

Post-accident monitoring, this revised that list. There is a list of Reg Guide 197 Type A and Category 1 instruments. Those are the ones that have to go into the tech specs.

This one actually changed containment wide-range pressure to wetwell pressure. That is actually the instrument that we used. And it adds a wetwell atmospheric temperature that wasn't in the table. There are two other departures that affect that table. We will go through those as we get to them.

Control rod drive interfaces as an alternate method to ensure full rod insertion to the bases. The rod control information and system operator information, it revises the design description. It is push button now instead of a test switch.

The plant medium-voltage design, the electrical folks just went through a lot of those, but it is all those design changes through the same CpG sizing.

8.3.3, Electrical Site-Specific Power, this revises the list of -- or the MCC nomenclature adds some MCCs to the list of required distributions portions.

And finally, the condensate and feedwater system, the DCD mentioned three feedwater pumps. We have four. So, we have four adjustable-speed rods at four points.

Okay, now for the eight non-design-related departures, most of these were brought about because of rule changes once the design was certified.

For instance, the safety limit violation, 10 CFR 50.72 and 73 were changed. So, certain of the notification requirements are no longer required. So, that was removed.

Post-exit monitoring instrumentation, this is where we removed one item from the PAM table. It removes containment water level parameter. We still have suppression cool water level, and we have the appropriate instrumentation to monitor.

Unit responsibility eliminates control room SRO requirements in MODE 4. That is a cold shutdown for us.

The unit staff, it provides the actual plant staff time.

The Bases Control Program, that eliminates that term under the safety questions for the 50.59 change.

Reporting requirements revises annual

reporting. It just changes the date you have to submit your annual report.

Working hours removes the working hour limits from tech spec, since it is now required by rule.

And In-Service Testing Program, it is just the ASME Section XI. We now refer to ASME Operations and Maintenance Code.

The COL license information items are a little more interesting. We only had one, but it is an all-encompassing item. It was to supply all the bracketed information. We have about 450 bracketed items in there, and they fall under 156-odd categories.

But the staff came out with the Interim Staff Guidance ISG-08 necessary content of the tech specs when a license is issued. We had three options. The first option is give us your plant-specific information. We were able to do that for almost all the items. Okay?

The second one was, well, if you can't do that, give us a bounding value. We had only one item we had to do that with. We think we know the correct answer here, but it is a required number of LPRMs per division to make it APRM and division-operable. So, we are living with the high number. There is a pair of analyses to get that number. Before we actually operate, we will

get that number and get it refined.

And then, finally, the third option was reference a program that uses an NRC-approved methodology. We did that for all the allowable values in the tech specs. And in order to do that, we had to create an instrument setpoint methodology. We will talk about that on the next slide.

So, this is the setpoint methodology. It has, actually, a new specification to the admin section. Setpoint Control Program is the title. And it identifies the methodology documents used to calculate the setpoints. It relocates all the allowable values from the tech specs to the licensing control document.

In order to do that, we had to revise definitions in the related surveillance requirements, and the definitions for two types of functional tests, and two types of channel calibrations had to be changed. In the functional tests, we have actually a requirement to verify setpoints. So, that would be a much more restrictive change in the vernacular.

And finally, it establishes the document that contains the required setpoint values.

Site-specific supplemental information, there's only two types, the bracketed information that

we supplied -- it is sort of supplemental -- and then the ultimate heat sink surveillance requirements. We changed the design of the heat sink which had a spray pond. We now have a cooling tower with cooling tower cells and fans. So, we had to add a surveillance requirement to test the cell fans, and we also changed the requirements for measuring the basin. The pumps are located below the basin. So, we actually measure down to the basin bottom now.

So, that is the supplemental information.

CHAIRMAN ABDEL-KHALIK: Where does the site-specific flood level come in?

MR. CASHELL: That's in Chapter 1. That is the site parameter table, I guess in Chapter 2. Is that? Chapter 2, I believe.

MR. HEAD: Are you talking in tech specs or in --

MR. CASHELL: It's not in the tech specs.

CHAIRMAN ABDEL-KHALIK: It is not in the tech specs. It's in Chapter 2?

MR. EUDY: I couldn't answer that.

CHAIRMAN ABDEL-KHALIK: Okay. Well, will we have an opportunity to look at that? One of the things I guess that relates to that was the fact that they have

added doors that, presumably, remain closed and water-tight to accommodate the fact that the site flood level is somewhat higher than --

MR. EUDY: Right.

CHAIRMAN ABDEL-KHALIK: And the question I have, and I don't know whether this is the right time to ask it, is whether or not these doors remained closed and water-tight during an outage.

MR. HEAD: Our plans right now, that they are to remain open. They are functional doors. I believe we are still in dialog with the staff on Chapter 19 on that topic. So, there's two opportunities to discuss that.

CHAIRMAN ABDEL-KHALIK: We'll probably revisit this at a more appropriate time.

Thank you.

MR. CASHELL: And finally, our future plans. Because we are sitting there at Rev. 0 with our tech specs, we realize that the Tech Spec Task Force Traveler Program began about when our design was certified, and there are 500 TSTFs. At least 100 of them apply to us. We want to bring our tech specs up to the Rev. 3.1 level for both of the NUREGs. So, we intend to do that. We actually intend to submit that application close after

we get our combined license.

We have incorporated those TSTFs, and what it incorporates, also, there are eight risk-informed initiatives. It will incorporate most of those risk-informed initiatives, and most of those have been done by this CLIIP process, this Consolidated Line Item Improvement Program.

So, we will wrap all that up into one application and bring the tech specs up to grade. A lot of that is bases descriptions. It is writing the specs better, so they're easier to understand, and the operators do it.

In the second bullet there is the risk-managed tech specs. STP 1 and 2 actually have this option, this option Initiative 4b, which allows you to have a backstop for your completion times and set your own completion times based on your PRA. We will approach that parallel with the other one. That one will probably take longer to get approved. So, we will do it as a separate submittal.

Now, the third bullet, we intend to have our plant-specific PRA complete prior to COL issuance in sufficient form to support these initiatives. When I say, "complete," it won't have the external events fire and seismic prior to fuel load, but it will be done

soon thereafter and before we operate.

And our PRA will be ASME. It will meet the ASME standard. It will meet Reg Guide 1.200, and it will have had its peer review done on the portions that are finished.

So, we believe we can accomplish all this, bring our tech specs up to the latest, greatest today's standards, and be among the very few plants that actually are fully risk-informed. Before we actually operate the plant, we hope to get these approved.

CHAIRMAN ABDEL-KHALIK: In the setpoint methodology, is there a reference to a specific topical that you will use for --

MR. CASHELL: Yes.

CHAIRMAN ABDEL-KHALIK: -- the detect and suppress stability?

MR. CASHELL: Yes, there is. There is a WCAP for that. It is --

CHAIRMAN ABDEL-KHALIK: But does that include the detect and suppress option 3 methodology as well?

MR. CASHELL: Yes. Yes, it does. That is one of the topicals we discussed this morning that will be submitted to the NRC in late June as part of the Fuel

Amendment, the new Fuel Amendment.

CHAIRMAN ABDEL-KHALIK: Okay.

MR. CASHELL: Okay? It will be based on the new fuel type. We actually have two topicals in the setpoint methodology. It is all the tech spec allowable value-type setpoints, and then the OPRM setpoints for stability. That has its own --

CHAIRMAN ABDEL-KHALIK: I suspect this is one of the topicals that the Committee will need to look at --

MR. CASHELL: Okay.

CHAIRMAN ABDEL-KHALIK: -- in conjunction with the Thermal-Hydraulic Subcommittee.

MR. CASHELL: Okay.

CHAIRMAN ABDEL-KHALIK: Okay.

MEMBER-AT-LARGE STETKAR: I have several detailed things.

CHAIRMAN ABDEL-KHALIK: Please, go ahead. Sure.

MEMBER-AT-LARGE STETKAR: You may have gathered that I am sort of detail-oriented and electrical. So, I went through the tech specs for electrical stuff. But I stumbled over a couple of other things that I wanted to ask you about first before the electrical.

There's a footnote in table 3.3.4.1-1 that specifies allowable values for reactor internal pump trip timing. I noted that the allowable value for the trip timing for internal pumps A, D, F, J, B, E, and H is less than or equal to zero seconds. That is a pretty doggone tight setpoint.

(Laughter.)

It is hard for me to measure zero, much less less than zero. And it has been added. I mean it is something that you added to this. It is not carried over from the original DCD.

So, I would like to understand how you measure that.

MR. CASHELL: That was an early attempt to --

MEMBER SIEBER: It's where your car quits.

(Laughter.)

MR. CASHELL: -- to complete the brackets while this interim step --

MEMBER-AT-LARGE STETKAR: Zero is a small number.

MR. CASHELL: -- was being created.

MEMBER-AT-LARGE STETKAR: I notice the staff didn't ask about zero.

MR. CASHELL: We took all those out in

response to an RAI.

MEMBER-AT-LARGE STETKAR: Oh, did you?

MR. CASHELL: I would note it comes out completely, and the allowable values, it just references the new setpoint control program.

MEMBER-AT-LARGE STETKAR: Oh, okay.

MR. CASHELL: The WCAP will explain how to obtain all of that.

MEMBER-AT-LARGE STETKAR: I saw that in most cases, but this happened to be one case that it wasn't, and zero caught my eye. Okay.

Before I get to electrical stuff, there is -- this, again, is plant-specific -- this MODE 4 for south Texas is cold shutdown?

MR. CASHELL: Shutdown.

MEMBER-AT-LARGE STETKAR: Okay. There's a requirement that says, if I have no reactor cooling water or no reactor service water -- I might have the names of those systems wrong -- RCW or RSW, or no ultimate heat sink, I have to be in hot shutdown within 12 hours and cold shutdown within 36 hours. How do I get to cold shutdown if I don't have those systems?

This is a holdover from when I was an operator, and I was required to go to cold shutdown if I had no

component cooling water, and I couldn't get there. So, I am curious how you can get to a place that the tech specs are telling you to go to.

MR. CASHELL: You know, I guess that is one of the glitches with the way tech specs are written. What you would do if you couldn't get there in 36 hours is --

MEMBER-AT-LARGE STETKAR: Call the staff?

MR. CASHELL: Well, I was going to say you would have Tech Spec 303, but 303 only applies in MODES 1, 2, and 3. So, you don't really have a spec any longer you can follow. The best you can do is continue to cool down and try to regain surface water.

MR. HEAD: But being inoperable doesn't really always mean they are non-functional.

MEMBER-AT-LARGE STETKAR: That's true. That's true. I understand that. I was just curious whether I was missing something basically.

MR. CASHELL: And that, actually, may be one of the specs that is corrected by these 100-odd TSTFs. I can't remember for sure.

MEMBER-AT-LARGE STETKAR: No, no, this is just counting up number of trains of things. So, it shouldn't be a setpoint.

MR. CASHELL: So, it shouldn't be a setpoint. Well, some of those were actually --

MEMBER-AT-LARGE STETKAR: Anyway, let me get to the electrical stuff because that was more of a curiosity.

How am I going to do this? If I have one -- I'm going to think about offsite power here for a moment. LCO 3.8.1.a.1 says, if I have one of two offsite AC power sources to one ESF bus inoperable, then I must verify that the ESF bus is powered from the other operable offsite, from the operable offsite source within 72 hours.

So, does that mean that, if I'm in the plant, I can actually leave that bus without any source of offsite power for 72 hours? According to this, I can. Why?

MR. CASHELL: Well, there's a whole series. Isn't there an A1 and A2, A3? You need all those.

MEMBER-AT-LARGE STETKAR: This is --

MR. CASHELL: The distribution specification would apply there, too.

MEMBER-AT-LARGE STETKAR: The distribution, yes, I will ask you later about distribution stuff.

MR. CASHELL: Okay.

MEMBER-AT-LARGE STETKAR: But I'm interpreting that correctly? The tech specs allow me

to have both -- they can't both be inoperable, but I can have one inoperable and one disconnected for 72 hours?

MR. CASHELL: Well, the distribution system, Spec 1 would allow you to do that. You would have to power it from some location.

MEMBER-AT-LARGE STETKAR: Okay.

MR. CASHELL: Let me add just one other thing, just for clarification.

MEMBER-AT-LARGE STETKAR: Actually, the distribution systems says, with one AC electrical distribution system inoperable, restore AC power to the distribution system to operable status within 72 hours.

So, I tried to check these numbers.

MR. HEACOCK: Let me add onto the other part of the distribution, the 72-hours alignment to the other source.

If you go back and look at how the diesels are designed, if we lose the preferred source that we are on at the time, we are going to lose and go out on under-voltage, and we are going to start the diesels and we are going to load to the diesels. That is where you are going to be initially. You are not going to be without power. You are going to be on the diesel generator. That is where it goes first.

So, to a degree, what they are basically saying is that, yes, it is probably not the best wording for 72 hours, but you have some amount of time to try to get off the diesels and then over to the alternate source by manual connection.

MEMBER-AT-LARGE STETKAR: That's a pretty good answer, but 72 hours still seems a long time --

MR. HEACOCK: I understand.

MEMBER-AT-LARGE STETKAR: -- to allow people to sit there.

MR. HEACOCK: That was the intent, though, is to follow that path.

MEMBER-AT-LARGE STETKAR: Well, I just wanted to make sure because I want to get to other areas where I actually had more difficulty understanding even what the tech specs were telling me.

MR. CASHELL: Along with that 72-hour requirement, though, is to verify that the CTG is functional.

MEMBER-AT-LARGE STETKAR: That's right. I will get to that in a second. I'm kind of slow. I have to work my way down from the offsite power stuff.

Now I have to read something very carefully, and I want to make sure I quote this correctly. This

is from LCO 3.8.1.b.2.

It says, "With one required offsite circuit inoperable, the required action is declare required feature(s) with no power available from an operable offsite circuit inoperable when the redundant required feature(s) are in operable."

What does that mean?

MR. CASHELL: What that would do, that says, if you lost a function because --

MEMBER-AT-LARGE STETKAR: Let's say I lost the UAT.

MR. CASHELL: -- you lost power to it, right?

MEMBER-AT-LARGE STETKAR: Yes.

MR. CASHELL: And then, you go and look at the other function, and it's inoperable. Now what they are telling you to do is we can't rely on that train working. You already know that component is inoperable. So, with this one, without the power, you just immediately declare that feature inoperable. That will drive you to the specification for the feature; for instance, a type of pump or something, and that specification will give you a much more limited completion time.

MR. CHAPPELL: It ensures that, if you have power feeding your defense-in-depth multiple trains,

if any of those other components are already inop at the time when you enter the specification for loss of power. It requires you to look at all of the trains available or components available to provide that function. And if there are parts that are inoperable, then it drives you to declare that component inoperable within a specified timeframe.

MEMBER-AT-LARGE STETKAR: But I don't have to require it, I don't have to declare it inoperable if everything else on the other trains are operable?

MR. CASHELL: The function is operable, right.

MR. CHAPPELL: Right.

MEMBER-AT-LARGE STETKAR: That's kind of different. I will have to think about that.

MEMBER SIEBER: If you're the supervisor, you've got to refer that to the shift attorney.

MEMBER-AT-LARGE STETKAR: I was going to say I didn't get a law degree, and I had a real difficult time understanding this one as the shift supervisor.

But that's the way to interpret it functionally, is that I only enter that action -- that action statement applies -- for example, if I lose the UAT feed -- remember, this is for one required offsite

circuit, inoperable. If I lose the UAT -- so, I don't start the diesels.

I will lose the RAT feed to bus A3. Okay? That is one of my required offsite circuits for bus A3. Nothing happens to the plant. But as long as nothing on buses B3 and C3 is inoperable, I'm okay?

MR. HEAD: Right. You're only in the electrical --

MR. CASHELL: And then you stay in the electrical specs, in that specification --

MR. HEAD: Stay in the action statement --

MR. CASHELL: Only in the distribution systems spec.

MEMBER-AT-LARGE STETKAR: Yes, but the distribution system is 72 hours.

MR. HEAD: This aspect is pretty standard.

MEMBER-AT-LARGE STETKAR: Is it?

MR. HEAD: Yes, on 1 and 2, we have the same sort of specification, that --

MEMBER-AT-LARGE STETKAR: Oh, okay. I haven't looked at tech specs in a long time. The ones I've looked at were not written like this one.

MR. CASHELL: Well, remember how you used to have to cascade through all the specs and everything?

MEMBER-AT-LARGE STETKAR: Yes.

MR. CASHELL: What this statement does now, instead of letting you stay with the real broad timeframes, the 72 hours and all, they will force you into a two-hour completion time or an eight-hour, or something more restrictive, depending on the components that are inoperable.

MEMBER-AT-LARGE STETKAR: I have to think about what it is telling me, but I at least understand the philosophy.

Now another sort of philosophical one, again, with one required offsite circuit inoperable, and this is LCO 3.8.1.b.5. "With one required offsite circuit inoperable, restore the required offsite circuit to operable status within 14 days and one day from discovery of two divisions with no power available from an operable offsite circuit, and 15 days from discovery of failure to meet the LCO."

What do all of the "and's" mean? I mean I can understand restore the circuit to operable status within 14 days. That I can handle. But what are all of the "and" things?

MR. CASHELL: If you had separate conditions entries, it gives you all the timeframes that you have

to meet. In other words, if you entered one, and then three days later you entered it again for another circuit, then, all of a sudden, you can't just add the 14 days to each of those and carry on. You have an overall limit of that 15 days.

MEMBER-AT-LARGE STETKAR: What does the final "and 15 days from discovery of failure to meet the LCO" mean?

MR. CHAPPELL: That means, once you enter that LCO for a loss of offsite, or whatever reason you entered in, you have 15 days from that point to exit it, period. That 15 days would only apply if you had a subsequent inoperability that was concurrent.

MEMBER-AT-LARGE STETKAR: Okay.

MR. CHAPPELL: So, that way, you can't switch from one power source to another source, stay in the LCO, and extend it indefinitely.

MR. CASHELL: You can't use that to do maintenance forever and keep running operable the whole time.

MEMBER-AT-LARGE STETKAR: Okay. I'll have to think about that one, too.

A couple more. You will have to bear with me here.

LCO 3.8.1.c.3, if I have one required diesel generator inoperable, I must -- c.3.1 says, "Determine the operable diesel generators are not inoperable due to a common-cause failure" or c.3.2, "Perform surveillance requirement 3.8.1.2 for the operable diesel generators."

And similar statements apply, for example, for the DC systems where I must demonstrate that the others are not inoperable due to a common-cause failure. How do I do that?

MEMBER SIEBER: Surveillance.

MEMBER-AT-LARGE STETKAR: Well, but it says I either do that or I do the surveillance. So, I am curious about what that is that I can do without actually doing a functional surveillance, since I am given that option.

MR. CASHELL: If you determine what went wrong, you determine bad fuel or --

MEMBER-AT-LARGE STETKAR: Or a relay failed.

MR. CASHELL: Yes.

MEMBER-AT-LARGE STETKAR: I'm sorry, it's a solid-state. A part failed.

MR. CASHELL: Anything it could be that you immediately recognize as being common-mode failure, then declare them all inoperable. But if you don't know what the failure mode is or what really caused it, it gives

you an option to go out; we'll just start the other one and run it through its surveillances --

MEMBER-AT-LARGE STETKAR: Isn't, in some sense, other than the fact that an operator may have made a human error that is unique to this particular diesel generator and burned it up, for example, isn't any type of failure a potential common-cause failure until you verify that the other equipment hasn't failed?

MR. CHAPPELL: That's why it is a required action.

MEMBER-AT-LARGE STETKAR: Well, no, the requirement says I have an option. My fallback option is I can do the test. Now that gives me pretty good assurance. But, for the diesels and the DC, I can not do anything by simply declaring that the others are not susceptible to a common-cause failure.

And I'm curious about how I do that, how I, as an operator, you know, a shift supervisor, following these tech specs, do that.

MR. HEAD: But the diesel doesn't have to have failed. At that point in time, it is inoperable. And if it is something that you can see and go verify on the other two units it doesn't exist, then there is no reason to start them up. But if there is some question,

if it is some buried aspect that you don't really know, then the shift supervisor on 1 and 2 right now will go start those diesels up.

MEMBER-AT-LARGE STETKAR: This, again, is consistent with the way 1 and 2 are written?

MR. HEAD: Yes, sir.

MEMBER-AT-LARGE STETKAR: I assumed it was.

MR. CASHELL: And also, that is a case where you are still going to do a common-mode failure analysis on any diesel failure, but you will do it in your corrective action program. The tech specs aren't designed really to force you to do it there.

MEMBER-AT-LARGE STETKAR: Well, except the tech specs are designed to make sure that I have a minimal complement of equipment --

MR. CASHELL: Right.

MEMBER-AT-LARGE STETKAR: -- available to handle accident conditions.

MR. CASHELL: Yes.

MEMBER-AT-LARGE STETKAR: But I don't want to have to wait for the people doing the corrective action program analysis in the next three or four months, or whatever.

Okay. One last one, two. Again, these are

related. This is DC sources. It is LCO 3.8.4.a.

If one DC electrical power subsystem, either Division 1, 2, or 3, is inoperable, then I must verify that the combustion turbine generator is operable within, I must verify within 12 hours that the combustion turbine generator is operable. And the same requirement applies if I have one AC electrical distribution system inoperable.

The question I had is this requires that I verify operability of the combustion turbine generators. It does not require that I verify operability of the diesels for the other divisions. There's no requirement to verify diesel operability.

Since the combustion turbine generator is the second backup for the safety divisions, I was curious why the LCO focuses on the CTG rather than the DGs.

MR. CASHELL: I think you've got to separate these two.

MEMBER SIEBER: Especially since the combustion turbines aren't --

MEMBER-AT-LARGE STETKAR: But the combustion turbine is in the tech specs, all through the tech specs.

MR. CASHELL: The CTG is not in any of the LCOs. You notice it is never required to be operable.

What the CTG allows you in those specs is extended completion times for all these other things. In other words, that is how you get the 72 hours rather than a shorter period of time.

MEMBER-AT-LARGE STETKAR: But why is it the CTG rather than the diesels?

MR. CASHELL: Well, the diesels have their own specs in LCO and, also, they already have requirements, and you are already verifying --

MEMBER-AT-LARGE STETKAR: They're operable.

MR. CASHELL: -- frequently that they're operable. This is the only place the CTGs are covered.

MEMBER-AT-LARGE STETKAR: Oh, okay. Okay. I got it. I understand. Thank you. Thank you.

MR. HEAD: I wasn't the on-shift lawyer, but we spent more time in Chapter 8 on tech specs than --

MEMBER-AT-LARGE STETKAR: Well, the problem is I used to be on shift, and things that were written a lot more simply than these really taxed our ability to understand what we should do at three o'clock in the morning on Sunday, for example.

MEMBER SIEBER: Did you have a shift lawyer?

MEMBER-AT-LARGE STETKAR: We didn't,

unfortunately. And unfortunately, some of the people who we called, who knew absolutely what we were supposed to do, occasionally were wrong because they were not lawyers, either.

That is why some of these fairly convoluted tech specs are -- I don't want to say they're of concern. It is just thinking about how the staff, the operating staff, would respond to these within some reasonable time, make the right decision, is a bit daunting, I think.

MR. CASHELL: Actually, the bases are much better today than in the old custom specs. That helps. And remember, this is Rev. 0. This is when the whole concept of ITS was being developed, too. So, we are going to bring it up --

MEMBER-AT-LARGE STETKAR: Yes. Some of the reasons I ask these questions is, you know, I point to specific areas because I, quite honestly, couldn't figure out the philosophy. The CTG is a philosophical -- I understand that now. I at least understand the philosophy behind the other things.

I read the bases. The bases don't quite bring out that level of philosophy, either. So, thanks. I appreciate that.

CHAIRMAN ABDEL-KHALIK: Okay. Are there any

other questions to STP on this chapter?

(No response.)

We will move now to the staff's presentation on Chapter 16.

MR. EUDY: Hello again. I'm Mike Eudy. I'm going to be presenting the Chapter 16 review by staff.

We appreciate South Texas' overview of the chapter. We are going to focus on a couple of particular areas.

I have with me Craig Harbuck, who is going to go over the technical issues, and we have some other people in the audience in case there's any specific questions, and the review team.

A couple of items of interest that we are going to go over. We are going to talk about staff review focus. Kind of Craig's going to give an overview of the verification process for plant-specific tech specs and their tech specs departures and site-specific tech specs COL information.

We are going to talk about the bracketed items which were included in COL License Information Item 61.

They have already given an overview of ISG-8, but Craig can probably add some more discussion to that.

Then, we are going to talk about open item 61. There is one open item for Chapter 16 at the moment, but, basically, there's two items within it. So, Craig is going to talk about that. It is related to LSS and the pressure-temperature limits.

I will turn it over to Craig.

MR. HARBUCK: The plant-specific tech specs consist of the generic tech specs, any approved departures from the generic tech specs, and site-specific COL information. So, to do our review, our focus is that we verify and incorporate by reference the generic tech specs and bases.

Then, we check to see if the departures that are proposed, the ones that affect the tech specs, we verify that they are appropriate and acceptable. Of course, all departures from the tech specs have to be approved by the staff, as per the ruling, Part 52. Then, we verify that the information they have provided as site-specific, we verify that that is appropriate and correct.

Next slide.

The guidance that was issued in ISG-8 for completing plant-specific tech specs with site-specific information has been incorporated into Revision 3 of the Standard Review Plan, Section 60.0 that just came

out days ago. So, I am not sure what the status of the ISG is at the moment, but that is what we are using for this review.

The staff shared a publicly-noticed version of ISG-8 with the ACRS, and we got no comments back. So, it has been mentioned before in the other presentation, so I am assuming everyone is familiar with it. I won't go into it any more.

The site-specific information that we have that is not resolved yet has to do with limiting safety system settings and RCS pressure-temperature limits. The completion of staff review of this COL information, we call this open item 16-1.

Next slide.

The applicant proposed Standard Departure 60.3-100 to implement option 3 for limiting safety system settings and established an admin control tech spec for controlling instrumentation settings in a specified document outside the tech specs.

This approach is similar to that to be taken for the other design centers. It actually got its initial impetus, the ISG began when we started looking at the site-specific information, how they were proposed to be completed in the initial application for South Texas.

Now all the other design centers and COL applications are onboard with this approach for instrumentation.

Now the program specification references an NRC-approved methodology, and there has been a methodology submitted, and it is still under review. Therefore, it remains open in this chapter because staff hasn't completed that review.

But except for that, all the other changes to the generic tech specs that are related to completing site-specific information, or I should say the LSSS, we find it to be acceptable.

There is a backup slide if anyone would like to see more details about what Standard Departure 16.3-100 changes, but I am not sure how we are going to provide that. I don't think we have it on the computer, unless anyone wants to see it.

But if there's any other questions about the status of the methodology review, Chapter 7 reviewer Dinesh Taneja is here, and he would be able to speak to that.

Questions?

(No response.)

Okay, next slide.

The other item that is included in the

information that needs to be finished relates to the pressure-temperature limits report specification and the methodology for that. The Chapter 5 staff is still looking at that. I think there was a Chapter 5 presentation earlier today, and they must have mentioned the open item related to it.

The completion of the COL information-related PTLR and the generic tech specs is filling completion of the review of that methodology. Chapter 5 reviewer Neil Ray, and possibly George Thomas, could answer any questions about the status of that methodology review, if there is anything beyond what you discussed this morning.

The information that we needed in the generic tech specs is primarily referenced to the methodology report and the staff approval document, and the admin control tech spec, but there is also another place where we consider that the information, we can't conclude it is acceptable until we have confirmation that the P-T limit curves are acceptable. That would be in these two notes and two surveillances. To make it easier, I have just transcribed those onto the next slide, if we can just move to that.

You will see here that these modes state

at what temperature you need to monitor your head and vessel flange temperatures and what frequency you need to do that. Those numbers are probably okay, which is what the applicant contends. They have removed the brackets, but until we have the curves, I think it is prudent just to consider those to still be pending.

And to translate, 27 degrees C is 81 degrees, and 38 is about 100 in English units.

Let's see. Also, this goes in a little bit more detail, but not much more detail, about what Standard Departure 16.3-8 accomplishes.

And the last slide, then, is very simple. Because of these methodology reviews, these other chapters, we can't make a final conclusion. However, we, the reviewers for Chapter 16, we have no remaining issues that would be called tech spec issues per se.

CHAIRMAN ABDEL-KHALIK: Any questions for the staff on Chapter 16?

MEMBER SIEBER: Just so I get it straight, you have listed in everybody's tech specs certain setpoints, and STP has elected to, rather than put all those setpoints in the tech specs, they will establish a separate manual, and that will include the setpoint methodology and the setpoints. And that has been done by a lot of licensees.

Beyond that, most licensees have a scaling manual. I'm not sure everybody uses the same thing for that, but there is a manual that says -- you give it to the instrument man, and here's how he calibrates the instruments. It has got the span, the proportional band, the rate, the reset, and trip points within that. So, that is how your instruments are calibrated. That is supposed to make sure that the tech spec value is valid.

Is there a methodology where you keep the scaling manual consistent with the document which I would call the tech spec setpoint manual? Or do you do it that way or not? Do you know how your instrument department works?

MR. CASHELL: Kyle, would you like to address that then?

MR. DITTMAN: I guess I didn't follow the question, but --

CHAIRMAN ABDEL-KHALIK: Please identify yourself.

MR. DITTMAN: Oh, I'm Kyle Dittman, I&C Supervisor.

MEMBER SIEBER: Let me say it very briefly. Your tech specs, when they are finished, will reference a separate manual that will include the methodology for

establishing setpoints, and that will be a separate document from the tech specs.

Now, when you calibrate the instruments, you use a scaling manual which typically is derived from the setpoint manual, but it includes span, proportional band set rate, reset, and trip points. You may have an instrument that has four or five trip points on it, and you will list all those.

What methodology will you use to keep the scaling manual consistent with the setpoint manual?

MR. DITTMAN: It is all going to be controlled under a setpoint control program.

MEMBER SIEBER: Right.

MR. DITTMAN: And a setpoint control program will control how they are calibrated and what procedures. Obviously, the methodology will be approved as part of the SER, and that will be part of the setpoint control program. So, it will be, basically, driven all under that one program, which will ensure that it is consistent.

MEMBER SIEBER: Okay. Now the operator, as he operates the plant, has to refer to two documents. One of them is the tech specs itself, plus the procedures, and the setpoint manual. Is that correct?

MR. CASHELL: Yes. And actually, this new

process will probably make it easier on the I&C technician.

Let me read you a couple of excerpts from the setpoint control program.

MEMBER SIEBER: All right.

MR. CASHELL: "The nominal trip setpoint, the nominal value has found tolerance and has left tolerance for each tech spec. Required automatic protection instrumentation function shall be calibrated in conformance with this approved methodology" that we are going to have. Okay?

And it also discusses the acceptable margin that has to be in there. Okay?

MEMBER SIEBER: Right.

MR. CASHELL: Then, it talks about what a channel calibration and a functional test have to consist of. Okay? It tells a tech what to do, you know, take which values --

MEMBER SIEBER: Right.

MR. CASHELL: -- how to treat them, and everything else.

Then, it says the difference between the instrument channel trip setting, the as-found value, and the previously left value shall be evaluated, and all that. So, it talks about a training program, and

how you evaluate that.

Then, finally, it says, "Setpoint control programs shall establish a document containing the current value of the specified nominal trip setpoint allowable value, as-found tolerance, as-left tolerance, for each function" and references to the calculation documentation.

So, what I envision is a book that has all this in it, so that the tech will now have everything he really needs to look at. He will have the history. He will have what the value is, and what the temporary values may have been.

MR. DITTMAN: Yes, the setpoints will be in one place. When we put in a setpoint control, on their setpoint control program, someplace they will see them. But how you calibrate in the field will be driven by, you know, that will feed into the surveillance procedures, the calibration procedures.

So, when the techs go out and do the calibrations, like you said, the reset, the setting, the trip setpoints, all that stuff, that will be written right into the procedures. Those procedures will take into account the uncertainties from the methodology. The scaling will be done by a scaling count, but that

will feed into the procedures. So, all of that stuff will be driven by the program.

MEMBER SIEBER: Okay. And all of this, all these setpoints will be consistent throughout all the various types of operating procedures, including emergency and abnormal, plus the tech specs, plus the setpoint control document, plus the scaling manual? So, it is all going to have the same numbers?

MR. CASHELL: Yes, they have to be.

MEMBER SIEBER: Yes, I know it is supposed to be. I want you to tell me that it will be.

MR. DITTMAN: Yes, it will be. It will come, all that program and that listing setpoints.

MEMBER SIEBER: Okay. Thank you.

And I did get a document here from the licensee that explains this, which I probably will end up giving to the --

CHAIRMAN ABDEL-KHALIK: Charlie? Please go ahead.

MR. HARBUCK: That tells what the program looks like.

MEMBER SIEBER: Okay.

MR. HARBUCK: The program specification.

MEMBER SIEBER: Okay.

MEMBER BROWN: Can I have one question, but I don't know who is going to answer it? But in the FSAR there were a number of all the instrumentation checks, surveillance requirements, where your channel functional tests were specified to be at 92 days. Every 92 days, you had to go do this surveillance test.

Staff didn't like that. You wrote an RAI. I think 16 days, 21, issue 4 -- oh, by the way, it was specified in both DCD, Rev. 4, as well as the FSAR, Rev. 3.

Then, RAI 1668 came along, and that one finally identified that the applicant listened to the staff and said, okay, you don't like 92; we'll change to 31. And you came into basis because we had this automatic self-test and diagnostic routine.

The original basis, both in the DCD and the FSAR, said, not only do you have the diagnostics, but you also had highly-reliable components which were drift-free, virtually drift-free. Okay?

Staff came back and said, oh, no, you really can't use that as a basis because you've got self-diagnostics; we really like to have reliable components and drift-free performance for these components.

And that just raised the question to me about, for 31 days, is there a way you come up with the values or the data that says 31 days is good because these are highly-reliable? Quite frankly, I thought the argument that we test this stuff every 30, you know, constantly, particularly for digital equipment where we have self-tests and self-diagnostics, I moved in my program from weekly checks, and the Naval Nuclear approach, and started taking daily. We just checked and checked and checked. Finally, we found, gee, this stuff never went out of spec. I won't say, "never," but it was a long time.

So, did you have some type of database or some type of testing or something or was this 31 days and this high reliability stuff just plucked out of the air?

MR. HARBUCK: I'll give a stab at answering that, and then I will ask Dinesh Taneja to follow up.

It really comes down to a lack of sufficient information that staff is willing to make any conclusions about the digital design, such that we can say, oh, we can relax these frequencies.

Now the 92 days was a bracketed number in most cases.

MEMBER BROWN: Well, I understand that, but you said -- first, I was going to say, how did you come up with 92 days? But you also looked at 31, still working on the 31 days.

MR. HARBUCK: Okay. The 92 days comes from -- and the reason it is bracketed is because it was bracketed in Rev. 0, the standard, where there were topical reports that you could refer to, based on the analog-type systems, instrumentation systems, that used historical data to show that you could get away with testing less frequently. And that's how you got from 31 to 92 days.

MEMBER BROWN: Even in the analog world?

MR. HARBUCK: The analog world. Okay?

Of course, the tech specs tried to adapt to the digital, the new digital systems that were being proposed, but we weren't looking at hardware at that time. We don't have necessarily experience, and we don't even know what hardware is going to be purchased, I think. I don't think that has been decided yet.

So, there is not an experience base to justify, yes, we can go longer. Now, in theory, you know, yes, this stuff is supposed to be checking itself all the time and it doesn't drift, and you should be able to

get away with testing less often.

MEMBER BROWN: Manually testing less often?

MR. HARBUCK: Yes, manually testing less often.

But our technical staff has not chosen to -- my understanding is that there is not enough evidence yet to justify relaxing those frequencies. My guess is that, eventually, those things will be relaxed.

MEMBER BROWN: The analog-type database or historical experience was what type of analog equipment? The backing tubes, megants, transistors?

MR. HARBUCK: No, it's bystables.

MEMBER BROWN: Integrated circuits?

MR. HARBUCK: Well, I'm not --

MEMBER BROWN: That is the type of -- a bystable is not a component. That is an assembly of components.

MR. HARBUCK: It's old technology, 1960s technology for the most part.

Can you add anything to that, Dinesh?

MR. TANEJA: Yes. I'm Dinesh Taneja. I'm the I&C reviewer for this application.

One other thing that DCD tech specs surveillance intervals were based on, I believe in the

DCD they did try to take credit for the self-diagnostics --

MEMBER BROWN: Well, they stated that.

MR. TANEJA: -- and surveillance capabilities; whereas, in the COL application, STP did not actually, you know, that's one of the areas where they are not taking credit for that feature as yet.

So, that is the reason why the frequencies were made more frequent.

MEMBER BROWN: Well, the FSAR explicitly stated both of those factors, and you all said -- you went back and hit the 92 days first, and then they came back and just said we'll use 31 just because of the self-diagnostics-type stuff. The DCD quoted self-diagnostics also.

MR. TANEJA: I don't think they explicitly take credit for that self-diagnostics, you know, that I recall.

MEMBER BROWN: Well, here it says, "The frequency of 92 days is based on the specified high reliability and redundancy of devices used to implement the functions, the specified low drift, and the signal validation of tests that are automatically and continuously performed on the channels." That is right out of the FSAR, Rev. 3.

So, that is why I asked the question. I mean I don't have any problem with going to 31. I was looking for what experience base that your all's world -- I know what I had back in my programs, and I was curious as to what, based on previous meetings, what experience base you had to allow you to make those decisions. That's all.

MR. TANEJA: Experience with the existing operating plants was based on the actual test data from the past 20-30 years of operating experience.

MEMBER BROWN: In other words, how often do they have to realign, recalibrate --

MR. TANEJA: Exactly. Exactly. And that equipment is mostly like your analog type of instrument.

MEMBER BROWN: Transistorized?

MR. TANEJA: Transistorized, right.

MEMBER BROWN: Not integrated circuits? I guess the later ones might have had a few integrated circuits.

MR. TANEJA: Might have, but it is basically, you know, your Westinghouse 7300 and Foxboro I/A Systems, and these are, essentially, analog technology, you know, of the sixties and the seventies. Those instruments have been pretty reliable.

What the nuclear industry has done is they have basically done a lot of statistical analysis on the actual surveillances that they have been performing.

MEMBER BROWN: Okay.

MR. TANEJA: And that became the basis for a lot of the plants, even existing plants, extended their surveillance durations based on that information that they had.

MEMBER BROWN: Okay. So, you are going to be conservative and not use the 92, but shift back to an earlier --

MR. TANEJA: And, you know, we are going to probably see -- I don't think the applicant had any problem doing the --

MEMBER BROWN: Oh, obviously. He changed rapidly.

(Laughter.)

It was obvious they weren't going to argue.

Okay, that's all. You've answered enough.

MR. CASHELL: My understanding is, until we choose the instruments, that we start at zero. But our intent, when we do the upgrade, is, well, we will get the instruments, and, ideally, these instruments will have some operating experience in Japan and Australia

and here. We may be able to drop in that database and revise our surveillance frequencies.

MR. HEAD: We've done that on 1 and 2 in a number of cases.

MEMBER BROWN: Okay.

MR. HEAD: There's a risk basis, an experience basis. So, there's programs that you can use to do that.

MEMBER BROWN: All right. I am done. That answered me satisfactorily.

CHAIRMAN ABDEL-KHALIK: Are there any follow-up items?

MR. HEAD: I had one. I wanted to go back to this slide and just mention the end-game, whether it is British units or -- okay?

CHAIRMAN ABDEL-KHALIK: Yes.

MR. HEAD: When we are licensed and operating in the control room, that will read Fahrenheit. But when we come back and give you, when we address that issue, we will address it from the DCD all the way down. I was going to leave you with that this will --

CHAIRMAN ABDEL-KHALIK: But, I mean, this is just another example of the problem I'm talking about.

MR. HEAD: Exactly. I understand.

CHAIRMAN ABDEL-KHALIK: Right.

MR. HEAD: This points out your concern.

CHAIRMAN ABDEL-KHALIK: Right.

MEMBER SIEBER: I can do that one in my head.

(Laughter.)

MR. HEAD: Well, I understand, but should I, as an operator, have to do that?

CHAIRMAN ABDEL-KHALIK: Okay. Thank you.

MR. HEAD: Sure.

CHAIRMAN ABDEL-KHALIK: Are there any specific follow-up items on this chapter?

MS. BANERJEE: The simpler tech spec that John was --

MEMBER-AT-LARGE STETKAR: You know, the good news is I'm not going to have to be a shift supervisor at that plant.

(Laughter.)

We will make sure they have a minor in the law.

MS. BANERJEE: Simple English.

MEMBER SIEBER: You just never know.

MEMBER-AT-LARGE STETKAR: No, I do.

(Laughter.)

CHAIRMAN ABDEL-KHALIK: Rather than

starting and stopping in the middle of the next chapter, I would like for us to take a break at this time. We will reconvene at 10 after 3:00.

(Whereupon, the foregoing matter went off the record at 2:57 p.m. and went back on the record at 3:09 p.m.)

CHAIRMAN ABDEL-KHALIK: We're back in session.

At this time, we will go through Chapter 17, and we will start with STP's presentation.

MR. HEAD: Thank you.

We will start in with Chapter 17. It is our standard agenda. And today, we have Tim Walker, Quality Manager, joining us, and Bill Stillwell will take us through the discussion on Chapter 17.

MR. STILLWELL: If you didn't hear earlier, my name is Bill Stillwell. I am the Supervisor of Probabilistic Risk Assessment for STP, Units 3 and 4.

I have been at STP approximately 21 years or 22 years, three times.

(Laughter.)

I have been doing probabilistic risk assessment since before John started probabilistic risk assessment, but only slightly.

I guess that's enough background. I know most of you.

The reason we are talking from a PRA perspective about Chapter 17 is because Chapter 17 includes the design reliability assurance program, and the PRA process feeds the risk information into the Chapter 17 design reliability assurance program. So, it seems like a natural fit.

Where appropriate, I will pass off to Tim to talk about the specifics for the South Texas Project quality assurance program description.

Okay. Chapter 17 consisted in the DCD of three sections, well, four sections if you count zero. It was quality assurance during design, which GE used to design and certify the Advanced Boiling Water Reactor. It was quality assurance during the operations phase in 17.2, and then the reliability assurance program during the design phase in 17.3.

The STP combined license application incorporated those three sections by reference and added supplements to point to site-specific information that talks about the operational quality assurance program description and the STP design reliability assurance program for design and construction.

We added three new chapters, 17.4S, which is the reliability assurance program; 17.5S, which is the South Texas Project quality assurance program guidance, and 17.6S is how we are going to incorporate the maintenance for 10 CFR 50.65.

Good news, there are no departures in Chapter 17.

At this point, I am going to turn it over to Tim to talk about quality oversight activities that we have been undertaking.

MR. WALKER: Good afternoon.

My name is Tim Walker. I am the Manager of Quality for South Texas Units 3 and 4. I have been at STP for about 22 years. The last 12 years, I have been a manager in quality, including over the operating units and large projects, et cetera.

Prior to that, I worked at Hatch and Sequoyah during the operations and Sequoyah during the restart phase. And before that, I was in construction at Clinton, St. Lucie 1, and Fort St. Vrain.

To head into just some of the things that we have done as far as implementing the quality program, of course, Toshiba had never done any safety-related work for the U.S. markets here. So, we had to qualify

Toshiba, and we qualified two of their facilities, the Isogo Engineering Center and the Kayhan Operations Facility, by full-scope audits.

We have done three audits of the Isogo Engineering Center and a number of surveillances over there over the last three years. We find they have a very comprehensive quality program and a lot of experience, just not here in the U.S.

We worked on and submitted the applications for, and obtained, an ASME owner certificate, the first one that has been issued by ASME in over 20 years for an owner. It was kind of a learning experience for them again, as well as for us.

We currently have ongoing resident oversight of reactor pressure vessel fabrication that has been ongoing for about two years now, starting with the forging fabrication at Japan Steel Works in 2008, right around the April timeframe. Now most of the components have been shipped for our Unit 3 reactor to the IHI facility in Yokohama, which is right next door to the Toshiba Isogo Engineering Center, which is convenient.

Japan Future Enterprises, at JFE, is producing the plate for the upper shell courses and the top head dome.

Yakin is producing specialty steel, stainless steels and incanels, for the stub tubes that go in the bottom head, as well as the things like the shroud support plate that has just recently been fabricated at Yakin.

Toshiba NEEMD is located at the Kayhan Facility, and they do all of the reactor internals, reactor internal pumps, the reactor supports, fine motion control rod drives, the hydraulic control units, all done at Kayhan, an NEEMD facility.

Over the last 12 years, we have had the good fortune, and it has mixed really well with what we are doing now in new units, to have the opportunity to provide direct oversight of a number of large projects in replacement components for our operating units. Starting about 12 years ago, we did direct oversight with residents during fabrication of our Unit 1 and Unit 2 replacement steam generators at both the Westinghouse Pensacola facility and in Spain at ENSA.

We also did low-pressure rotor replacement fabrication oversight in Germany at Siemens' facility. That was the first time they had really ever had anybody come in and be residents there. That was a learning experience, once again, dealing in foreign culture with

the different folks that have different expectations than we do. We learned a lot from that.

We also did generator rotor replacement, as well as rewinds, at the Siemens' facility in North Carolina.

We had an unfortunate experience of having a standby diesel generator eject a piston about seven years ago. We had to take that diesel generator completely out of our site, take it to an offsite facility, do a complete teardown and a complete rebuild, including replacement of the crank shaft, all of the connecting rods, all of the pistons, all of the heads. We took every piece apart on that and put it back together. We learned a lot from doing that, too.

And lastly, the major project that we have had recently ongoing in Units 1 and 2 is replacing the heads for the operating units. That was done at Mitsubishi Heavy Industries in Kobe, Japan. That was before we had decided to do Units 3 and 4.

So, we had experience with dealing with the Japanese and many Japanese subsuppliers. We had resident inspectors in Kobe, direct STP employees, which has been a great benefit to us in learning the Japanese culture, dealing with their processes and procedures. They are

different companies, but we have learned a lot from doing that and being able to get around, and being familiar with working in Japan.

So, I just wanted to give you a little background on what we have been doing and why we think that we are well-suited and capable of going forward and do the oversight of the project that is coming up.

MR. STILLWELL: Okay, I'm going to skip slide 8 temporarily and go to slide 9 to close out our quality assurance program description.

We added a Chapter 17.5S, which is the QA program guidance. It implements NQA-1 ASME standard. It follows the NEI template 06-14A with site-specific or bracketed information provided. So, this is the implementation description for our quality assurance program description.

I guess right now is a good place to ask if we have questions on the quality assurance part of what is actually quality assurance Chapter 17.

CHAIRMAN ABDEL-KHALIK: We don't have any.

MR. STILLWELL: If not, we will go to the interesting part, from my perspective.

(Laughter.)

I'm sorry. Quality assurance is extremely

important, and that was just a joke.

Design reliability assurance program and the Maintenance Rule. Chapter 17.3 described the design reliability assurance program that GE implemented during certification.

As I mentioned, when we issued our combined operating license, we developed Chapter 17.4S, which is the STP implementation of design reliability assurance for design and construction. We also added Chapter 17.6S, which is how we are going to implement what used to be called operational reliability assurance or, actually, reliability assurance during the operation of the plant. And it describes how we do the Maintenance Rule.

17.4S is actually implemented at South Texas now. We have an expert panel in place that has embarked on risk-ranking our structures, systems, and components as we move forward.

I had better follow the slides for a while.

As I mentioned, design reliability, our reliability assurance program in general is a lifetime program. It will be in place over the life of the plant. Right now, we are doing the design portion, which is in place as we continue to design and actually construct the plant.

Prior to fuel load, we will transition to the Maintenance Rule program and other operational programs that will maintain the reliability of SSCs over the remainder life of the plant.

The reliability assurance program defines the criteria for PRA and deterministic identification of risk-significant SSCs. Actually, we have implemented a DRAP expert panel that is going to take PRA risk importance information from the plant-specific PRA and blend it with deterministic information from engineering, maintenance, operations, quality assurance, and come out with a risk ranking, if you will. Well, it is a risk ranking that is similar to a process we have implemented at South Texas about 10 years. It is not the same as, but it is really close. It approaches something that people like to talk about as greater quality assurance.

We are using a similar process in the blending and the setup of the expert panel.

Now I see questions starting.

MEMBER-AT-LARGE STETKAR: Yes. Unfortunately, you guys are the first up who actually seem to be doing some of this.

MR. STILLWELL: Oh, good.

MEMBER-AT-LARGE STETKAR: Some of us, like

me, need to be educated. You know, I understand Fussell-Vesely importance and risk achievement. Those things I can handle.

As far as the PRA input, is it true that the DRAP list contains anything with a Fussell-Vesely greater than .005 or a risk achievement greater than 2 by definition, or is that --

MR. STILLWELL: What was done in the DCD, and what we are continuing in Section 19K, they used a Fussell-Vesely of .1 percent and a risk achievement worth of 5 to define what was risk-significant in the early certification stage.

MEMBER-AT-LARGE STETKAR: Okay.

MR. STILLWELL: We are keeping that same certification, if you will, criteria, but what we are passing to the expert panel is Fussell-Vesely greater than .005 and risk achievement greater than 2 because that is consistent with what we do for online programs, like Maintenance Rule or risk importance.

MEMBER-AT-LARGE STETKAR: Okay. But that --

MR. STILLWELL: So, we are keeping the 19K.

MEMBER-AT-LARGE STETKAR: You're keeping the .1 and the 5 --

MR. STILLWELL: And 19K.

MEMBER-AT-LARGE STETKAR: -- as black and white --

MR. STILLWELL: Black and white.

MEMBER-AT-LARGE STETKAR: -- in terms of if they meet that, they are on the list?

MR. STILLWELL: Yes, sir.

MEMBER-AT-LARGE STETKAR: And then, anything that satisfies these more relaxed criteria gets passed on to the expert panel?

MR. STILLWELL: With a strong recommendation that it be added to the list.

MEMBER-AT-LARGE STETKAR: But anything that does not satisfy these criteria, does the expert panel also look at that? Or this is the screen that you use?

MR. STILLWELL: That's the purpose of the expert panel, is to bring their experience in engineering, operations, maintenance, quality assurance, reliability assurance programs to look at systems, structures, and components that the PRA doesn't model well. Or that were excluded from the PRA for whatever reason. We didn't have the design at the time or just complexity of the model.

MEMBER-AT-LARGE STETKAR: I guess what I was asking is, suppose I have something that is modeled

in the PRA, and it has a Fussell-Vesely, instead of half a percent, it's got .4 percent or a risk achievement worth of 1.8.

MR. STILLWELL: Uh-hum.

MEMBER-AT-LARGE STETKAR: Does the expert panel, is the expert panel told, "Hey, look at this" or is the expert panel told, "Don't look at this"? I'm trying to understand how this screen works.

MR. STILLWELL: The way it works for this other program that we've got implemented at 1 and 2, we will bring in the entire list. This is the rank, Fussell-Vesely, risk achievement worth combined --

MEMBER-AT-LARGE STETKAR: Of everything?

MR. STILLWELL: Of everything. In the other program, we say these things are on the list, because our program for 1 and 2 is set; if the PRA says it is risk-significant, it is risk-significant and will never change.

These other things are not risk-significant. However, we've got this little band thing here because, by experience, we found out that we don't like things shifting across thresholds between model updates.

We intend to bring everything to the expert panel in some sort of rank list on a system basis, and

then, we will discuss it at the expert panel.

MEMBER-AT-LARGE STETKAR: But you actually haven't done it?

MR. STILLWELL: We're actually starting the first one next month.

MEMBER-AT-LARGE STETKAR: Okay. Now once the expert panel looks at something -- so I now have a pump or a set of pumps -- there are a combination of weighting and rating, or weights and ratings, that the expert panel uses. For the benefit of me, and maybe even more for some of the other Subcommittee members who may not have gone through this process, could you briefly explain how that process works? I mean it is sort of described in the FSAR, but it is sort of bullets and numbers and weights.

MR. STILLWELL: At a high level, when the expert panel meets and we start talking about systems or SSCs in a particular system, we basically see the PRA, set it aside, and say let's talk deterministically now. So, we have five questions that we ask that are related to the questions everyone had to go through when they set up the Maintenance Rule or the set of components and systems in the Maintenance Rule. Is it used in EOPs? Can it cause a plant trip? Is it used in low-power

shutdown? Will its failure cause another initiating event? And I forget, off the top of my head, what the last one is.

But these five questions, we assigned a weight to. Some of them initially we thought were more important than others. So, EOP usage is very important. Cause another initiating event is very important.

Mentioned in the EOPs, but not necessarily used is kind, yes, we want to care about, but it is not that important. So, we assign qualitatively a rank to each one of the five questions.

MEMBER-AT-LARGE STETKAR: That's what you called the weight --

MR. STILLWELL: The weight.

MEMBER-AT-LARGE STETKAR: -- of those five questions?

MR. STILLWELL: And when we initially set it up, we wound up, once you did the multiplication for each of the five questions, with a rank of 100. So, we set up our deterministic criteria based on ranges of 10.

So, if we came up with an EOP importance of 4 or 5, and no matter what the PRA said about it, deterministically, we would say that system, structure,

or component is extremely important in the EOPs; we rely on it an awful lot. So, therefore, it is risk-significant, no matter what the PRA says.

On the other hand, if we came up with a risk significance of 5, which I think is actually the lowest we could get, and we couldn't come up with any other reason for this thing to even be talked about, it was obviously unimportant deterministically.

And then we looked at the combined criteria, the PRA actually had three criteria in STP 1 and 2. Deterministically, we set up a matching three criteria. We said, if it's high PRA, it's high. If it's medium PRA, it's medium. If it's high, expert panel, then it's obviously high, no matter what the PRA says. If it is medium, expert panel, it's medium if PRA is low or medium. But a medium expert panel couldn't drop a high PRA down.

So, we always defaulted to the higher rank of whichever process got us to the final rank. That is basically the blending process we have used to bring in deterministic information and PRA information.

We are going to be following the same process with the DRAP expert panel. I mentioned we are actually performing our first systems risk ranking April.

MEMBER-AT-LARGE STETKAR: Now what I wanted

to ask is, where are you -- I think I understand the basic process. A PRA was performed for the DCD --

MR. STILLWELL: Yes.

MEMBER-AT-LARGE STETKAR: -- which, obviously, needs modifications for plant-specific changes.

MR. STILLWELL: Yes.

MEMBER-AT-LARGE STETKAR: Are you in the process of updating that PRA now?

MR. STILLWELL: The PRA --

MEMBER-AT-LARGE STETKAR: When will it be, well, when will it be done?

MR. STILLWELL: It's done.

MEMBER-AT-LARGE STETKAR: And which PRA are you using, if you say -- oh, it's done?

MR. STILLWELL: It's done.

MEMBER-AT-LARGE STETKAR: So, that's the PRA that you are using to feed into the expert panel that you have --

MR. STILLWELL: Right now.

MEMBER-AT-LARGE STETKAR: -- constituted now. Okay.

MR. STILLWELL: Right now.

Just a little background for those that don't

know, we are actually building a PRA that will meet current codes and standards to support risk-informed applications, but, also, it is how we are going to comply with 50.71(h) for the operating life of the plant.

The PRA that came with the plant is a late 1980/early 1990 vintage PRA. Having upgraded two PRAs, I don't want to do that anymore. It is easier to start with a nice, clean piece of paper and say here's my standard; here's what we've got to have. That process is ongoing.

The PRA that supported certification has been modified to include site-specific departures, site-specific supplements and also the departures. That is the PRA we are using to feed this initial set of risk-ranking information to the DRAP expert panel.

MEMBER-AT-LARGE STETKAR: One last question, to keep us moving on. You've obviously not populated the DRAP list yet, other than perhaps things that --

MR. STILLWELL: The PRA information --

MEMBER-AT-LARGE STETKAR: Yes, I was going to say the absolute PRA pass/fail. But in terms of anything that might come out of the expert panel, when will the DRAP list be populated? Prior to issuance of the COL?

MR. STILLWELL: Our goal is to populate the list this year.

MEMBER-AT-LARGE STETKAR: Okay.

MR. STILLWELL: That is our goal.

MEMBER-AT-LARGE STETKAR: I want to ask the staff about what they do with -- this has been a continuing concern. It is DRAP lists for a plant like yours. It is RTNSS lists for the pure passive plants. They are parallel, and we have been having difficulties in our committees understanding when those lists get populated, how they are populated, and how they are reviewed, once they are populated. So, that is the reason for this.

MR. STILLWELL: Our goal is to get through the systems this year.

MEMBER-AT-LARGE STETKAR: Okay.

MR. STILLWELL: At least the first time through. The reason is because we are doing detail design, and we are also starting to purchase large pieces of equipment. So, we need to get reliability information to our end of the contracts, where we think it is going to be important. So, our goal is this year. I won't say what we've done by the end of the year, but our goal is --

MEMBER-AT-LARGE STETKAR: I will ask the staff more about when things get checked off.

Thanks. Okay.

MR. STILLWELL: And as I mentioned, DRAP feeds into the Maintenance Rule. Basically, it is the initial set of components that will be in 50.60-whatever it is. My mind just went blank.

CHAIRMAN ABDEL-KHALIK: Go on. That's okay. They're all numbers.

MR. STILLWELL: And the program has been implemented. It is in place, and we have the expert panel assembled.

MEMBER-AT-LARGE STETKAR: I was going to ask about one last thing.

MR. STILLWELL: Yes, sir.

MEMBER-AT-LARGE STETKAR: You said that you have already done the PRA input to the process. Did you identify any non-safety-related equipment for the DRAP list from the PRA?

MR. STILLWELL: There has always been non-safety-related equipment in the DRAP program for the ABWR.

MEMBER-AT-LARGE STETKAR: Okay.

MR. STILLWELL: Feedwater condensate primarily, but things like the AC independent water addition pump --

MEMBER-AT-LARGE STETKAR: Okay.

MR. STILLWELL: -- is a non-safety-related that is very important.

MEMBER-AT-LARGE STETKAR: Does CTG show up, just out of curiosity?

MR. STILLWELL: I can't imagine why the CTG would possibly show up. It's No. 1 on the list.

(Laughter.)

How can I forget that one. It's like being --

MEMBER-AT-LARGE STETKAR: I was just --

MR. STILLWELL: Yes, it's No. 1. It's at the top of the list.

Okay, the Maintenance Rule program, we have talked a little bit about it. NEI and the new plants worked with the NRC to identify how the Maintenance Rule was going to be implemented for the new plants.

We, the industry, developed NEI-07-02, which has been reviewed by the staff. I believe, but I am not sure, that there is a Safety Evaluation Report on the NEI template. If not, it has been accepted as this is how you are going to implement the Maintenance Rule. We basically adopted the NEI-07-02 template for the Maintenance Rule for operations of the ABWR.

I guess this is a good place to ask if anyone has any questions on the design and reliability assurance

program implementation at South Texas.

(No response.)

If not, I will keep going.

The last set of slides are COLA information items. We had four COLA information items in Chapter 17. The QA programs for construction and operation are covered in 17.5S. The procedures for design reliability assurance programs, 17.2 and 17.3, are discussed in 17.4S. Provision for ORAP is really the 17.6S Maintenance Rule.

ITAAC, the only ITAAC associated with Chapter 17 is the design reliability assurance program ITAAC, summarized right here. It is inspections for scope, purpose, and objectives. It is the process we use to evaluate and prioritize SSCs. The list is risk-significant SSCs. The process for determining dominant failure modes: key assumptions and insights are considered, and site-specific ITAAC are not provided.

That is basically our discussion of Chapter 17, unless there's other questions.

CHAIRMAN ABDEL-KHALIK: Are there any questions for STP on Chapter 17?

(No response.)

Okay, thank you, Mr. Stillwell.

MR. STILLWELL: Thank you for your time.

CHAIRMAN ABDEL-KHALIK: We will move on to the staff's presentation.

MR. ANAND: Good afternoon.

My name is Raj Anand, and I'm the Project Manager for the Chapter 17 of the South Texas COL application.

I have with me Garrett Newman and Mr. Todd Hilsmeier. Garrett is the Technical Reviewer for Section 17.0, 17.1, 17.2, and 17.5S, quality assurance program. Todd is a Technical Reviewer for the Section 17.3, 17.4S, related to the reliability assurance program, and 17.6, the Maintenance Rule program.

We thank STP for their presentation. The staff agrees with the STP presentation.

Chapter 17 addresses the quality assurance program during design, construction, the operation phase, as well as the reliability assurance program and the Maintenance Rule program.

There are no departures in Chapter 17.

Section 17.0, 17.1, 17.2, and 17.3 acknowledge the use of the ABWR DCD.

Section 17.4S describes the STP reliability program for detailed design, procurement, construction, and operations. The program ensures that the design

reliability of the risk-significant systems, structures, and components is maintained over the life of the plant.

Section 17.5S provides the quality assurance program guidance and is based upon the industry's template NEI-06-14A for new plants.

Section 17.6S describes the Maintenance Rule program. This section incorporates by reference the Nuclear Energy Institute's Report No. NEI-07-42, Genetic FSAR template guidance for Maintenance Rule program for plant licensed under 10 CFR Part 52.

With this, I will turn it over to Garrett Newman to discuss the important features of the quality assurance program during the design, construction, and operations phase.

After Garrett has finished with his presentation, then I will request Todd Hilsmeier to discuss the important issues related to the DRAP.

Garrett, do you want to start?

MR. NEWMAN: Okay, thank you, Raj.

Good afternoon.

My name is Garrett Newman. I'm a Reactor Operations Engineer in the Quality and Vendor Branch 2 in the Division of Construction and Inspection and Operational Programs.

A brief introduction: I've been with the agency almost four years. I came to the Office of New Reactors from Region I, where I was the local qualified reactor inspector. I served two short-term stints as a resident inspector at Susquehanna and Indian Point 3.

As Raj and STP mentioned, Section 17.0 through 17.2 incorporate those sections of the ABWR DCD. In addition, Section 17.0 addresses COL Information Item 17.1, QA programs for construction and operation. In that section, they point to Section 17.5S to address that item.

Section 17.1 is QA during design and construction, and Section 17.2 is DRAP programs during the operations phase. Those sections also point to 17.5S for those programs.

The staff conducted an inspection in January of 2009 focused on STP's activities during their due diligence assessment of Toshiba to determine whether they were qualified by EBWR design for Units 3 and 4 in accordance with 10 CFR Part 52, Appendix A.

As a followup, the staff issues an RAI because the STP was using the operational quality assurance programs for Units 1 and 2 for activities for the COL

application. Staff requested STP to incorporate the OQAP into Section 17.1. The STP's response included a commitment to incorporate that into 17.1. We found that response acceptance, and it is being tracked as a confirmatory item.

With the exception of that item, the staff found those three sections acceptable.

Section 17.5S is the quality assurance program guidance section. This section references the Units 3 and 4 quality assurance program description. The staff used Appendix B to 10 CFR Part 50 and NUREG-800 and the SRP Section 17.5 to evaluate this section on the QAPD.

As mentioned before, the QAPD was based on the NEI template 06-14. This template provided a general QA program for ESP and COL applicants to be supplemented by applicant-specific information in bracketed sections. The template is based on ASME NQA-1-1994 and, as endorsed, it is the method to comply with Appendix B.

Provision 7 of the template was submitted in July 2009. It was endorsed in December of 2009.

There is one open item relating to this section, and I will discuss that now. The staff issued RAI 17.5-9 because Part 4 of the QAPD regulatory commitments did

not adequately address QA-related guidance to fully comply with Appendix B. The specific items are listed here that were mentioned in the RAI.

Staff and the industry are working through the generic issues through an update to the template 06-14, and the STP had indicated that they had planned on updating to the newer revision, once it is endorsed by the NRC, to address those issues.

STP responded yesterday to the RAI, and the staff has not yet completed the review of that. This is, therefore, being tracked as an open item.

Unless there's any questions these sections, I am going to pass it to Todd.

CHAIRMAN ABDEL-KHALIK: Any questions?

(No response.)

Let's move on then.

MR. ANAND: Thank you, Garrett.

Now I will request Tod Hilsmeier to discuss some important topics related to design reliability assurance program, DRAP, and the Maintenance Rule program, as discussed in Chapter 17 of the Draft Safety Evaluation Report.

MR. HILSMEIER: Thank you, Raj.

My name is Todd Hilsmeier, and I will be

discussing STP's RAP program and, also, the Maintenance Rule program description.

As a background, I got my PhD at Ohio State University, where I specialized in reliability risk analysis. I worked at Scientech for six years doing PRA analysis, mostly PRA modeling.

Then, tired of traveling, I joined the utilities for six years and specialized, worked in the PRA group, more doing applications and some modeling.

Then, the grass is greener on the other side. It is great to work here at NRC. So, I joined NRC almost six years ago, again, working in the PRA group. So, I have about 17 years' experience in PRA.

The first slide I would like to talk about is FSAR Section 17.4S, which describes STP's RAP program and addresses the necessary COL information items. We will discuss a review of Section 17.4S through the following three subject areas:

First, we will discuss the staff's review of these essential elements of DRAP, which addresses COL Information Items 17.2 and 17.3, on how the applicant will implement a DRAP program.

Next, we will discuss the staff's review of the methodology for identifying the risk-significant

SSCs. So, it also addresses COL Information Item 17.2.

And lastly, we will discuss the staff's review of the proposed process for integrating RAP into operational programs, which addresses COL Information Item 17.4.

Next slide.

This slide presents the staff's review of the essential elements of DRAP. The applicant described in Section 17.4S the essential elements of DRAP. The essential elements of DRAP is basically a process or a control that is applied by the applicant to ensure that the plant is designed and constructed consistent with the key assumptions and risk insights and to ensure that the risk-significant SSCs are appropriately developed, retained, and communicated to the appropriate organizations.

Section 17.4S described these essential elements, which include, describing at a high level, how the organizations responsible for developing and implementing DRAP activities interface to ensure that the plant is designed and constructed consistent with the key assumptions and risk insights of the PRA and deterministic analyses.

Also, the essential elements include how

the design control change process provides a feedback mechanism to the risk management organization, and the quality control is used for identifying the risk-significant SSCs.

In developing a PRA model, it is very important that the PRA group and the design engineering group are interfacing. Because when there are design changes, those design changes need to be communicated to the PRA group, to update the PRA model and risk-significant SSCs. And if any new risk insights or key assumptions are made, that needs to be communicated to the design organization to ensure that assumptions are realistic and achievable.

Also, the essential elements include procedural controls for DRAP activities, record controls for DRAP activities, a corrective action process applied to DRAP activities, and, also, audit plans for DRAP activities.

And the applicant plans to proceduralize and start implementing the essential elements of DRAP by March 2010. As Bill Stillwell mentioned, they are already implementing these essential elements.

The staff will conduct an audit to verify this activity, to verify that the essential elements are properly implemented, most likely early this summer.

This is Confirmatory Item 17.04-8

The next slide.

MEMBER-AT-LARGE STETKAR: Todd, that audit is simply to examine the basic elements of the program, right?

MR. HILSMEIER: Right. Exactly.

MEMBER-AT-LARGE STETKAR: Okay. Thanks.

MR. HILSMEIER: The next slide presents the staff's review of the methodology for identifying the risk-significant SSCs.

One question that is asked pretty often is, what do we do with the risk-significant SSCs? RTNSS does one thing, and RAP does another. Basically, under RAP, the risk-significant SSCs are identified because the non-safety-related risk-significant SSCs are subjected to quality assurance controls that meet the provisions of SRP 17.5, Part V. We don't mention anything about the safety-related SSCs because they are already covered under Appendix B of 10 CFR Part 50.

Also, the risk-significant SSCs are identified to ensure that the maintenance and testing activities address the dominant failure modes of these SSCs.

Lastly, the risk-significant SSCs are

considered high safety-significant under the Maintenance Rule. What that means is these high safety-significant SSCs are given explicit reliability availability performance criteria based on the PRA reliability availability values.

The initial identification of the risk-significant SSCs for preparation of the STP's COLA application is provided in Appendix 19K of the FSAR. We will be discussing that table, that list of risk-significant SSCs, during a Chapter 19 presentation to ACRS.

MEMBER-AT-LARGE STETKAR: But that list is based on the DCD PRA of the DCD design? Is that correct?

MR. HILSMEIER: And modified/supplemented based on the plant-specific information and departures.

MEMBER-AT-LARGE STETKAR: Okay. Yes. Okay.

MR. HILSMEIER: So, to fully understand and appreciate the changes to a list, we need to discuss it in context with the changes to the PRA. So, we felt it's most appropriate --

MEMBER-AT-LARGE STETKAR: I mean, if I can understand it, the list that currently exists in Section 19K of the STP COLA FSAR is a list that is derived from

the current PRA?

MR. STILLWELL: Let me see if I can clarify your question to give you the correct --

MEMBER-AT-LARGE STETKAR: I'm trying to find out where that --

MR. STILLWELL: You are looking at Revision 3 of the COLA, the one that went in last September.

MEMBER-AT-LARGE STETKAR: Uh-hum.

MR. STILLWELL: That list was based on the PRA that was modified to support Revision 0. We have since responded to an RAI with the PRA that includes STP departures. So, an RAI response has the latest and greatest 19K list, if you will.

MEMBER-AT-LARGE STETKAR: No, I hear you, Bill. This is part of what we're running into, is it is difficult for our -- we haven't looked at Chapter 19 yet officially of anything. But part of the problem that we are running into, whether it is RTNSS or DRAP, is there seems to be -- and this is not unique to STP; it is across the board -- this undercurrent of the real analyses and the real lists being documented in, you know, large numbers of RAI responses rather than pulled together everywhere. So, this is just kind of a forewarning that I guess we will need to look there for

this one also.

MR. STILLWELL: The 3 and 4 comes out before we get to Chapter 19, then it will be in Rev. 4.

MEMBER-AT-LARGE STETKAR: Okay. But that list -- well, we will worry about that --

MR. STILLWELL: But, yes, there is a consolidated list that is basically all of the information we know from the PRA.

MEMBER-AT-LARGE STETKAR: What I was going to ask Todd, then, is, is the last -- well, I will let you get to the last bullet. Sorry.

(Laughter.)

MEMBER SIEBER: Don't shoot him until he's --

MEMBER-AT-LARGE STETKAR: That's right. I've got to get you lined up on the crosshairs first.

(Laughter.)

MR. HILSMEIER: As the applicant enters the detailed design and construction phases, the list of risk-significant SSCs will be revised/updated using the criteria shown on this slide.

As Bill Stillwell talked about, from the PRA, SSCs may be considered risk-significant if the Fussell-Vesely is .005 or more or if the raw is greater than or equal to 2.

And also, the expert panel is established to identify additional risk-significant SSCs based on deterministic techniques and operating experience.

The applicant, based on teleconference calls, the applicant plans to identify the risk-significant SSCs using the revised methodology in 2010. We plan to conduct an audit to verify this activity.

MEMBER-AT-LARGE STETKAR: Now my question.

MR. HILSMEIER: Okay.

MEMBER-AT-LARGE STETKAR: Where will that list be documented? Assuming that the last bullet refers to your audit of, what I will hopefully call, the final list for the COL.

MR. HILSMEIER: It needs to be documented in the FSAR.

MEMBER-AT-LARGE STETKAR: Okay.

MR. HILSMEIER: Because one of the -- I don't really want to say, "requirements". The RAP is a funny animal. Some people say it is required; some people say it is not required. So, I am going to use the term "requirements". Anyway, based on the staff guidance, the FSAR needs to contain a complete list of RAP SSCs. So, if that list is updated with the revised methodology, the FSAR needs to contain that list. And that is what

we will be looking for, that the final list is included in the FSAR.

MEMBER-AT-LARGE STETKAR: So that, if I step back from the kind of interim mechanics of the process, eventually, there will be an SER written on some revision of the FSAR that includes the final DRAP list, is that correct?

MR. HILSMEIER: Correct. That's what I expect.

MEMBER-AT-LARGE STETKAR: Okay. What I am trying to understand is, from our perspective, because we only get involved in this process up to a certain point, that the DRAP list, the finalization of the DRAP list is not an ITAAC item that is continued post-COL. It is only subject to staff audits, that, indeed, the SER -- however that final DRAP list is negotiated, that list will be subject to a staff review and an SER. Is that --

MR. HILSMEIER: Yes.

MEMBER-AT-LARGE STETKAR: Okay.

MR. HILSMEIER: And I see that list as a live list. As the PRA changes, that list may change.

MEMBER-AT-LARGE STETKAR: At some point frozen in time, Rev. X of STP COL FSAR with an SER --

MR. HILSMEIER: Right.

MEMBER-AT-LARGE STETKAR: -- that's stamped, that will be a frozen-in-time snapshot of what that list is?

MR. HILSMEIER: Yes.

MEMBER-AT-LARGE STETKAR: Okay. And any changes, obviously, if you change things later, that's later, but --

MR. HILSMEIER: Right.

MEMBER-AT-LARGE STETKAR: That's good. That's reassuring, actually. I am glad to hear that.

MR. HILSMEIER: Thank you.

The next --

MEMBER-AT-LARGE STETKAR: I hope that it actually works that way.

MR. HILSMEIER: Yes.

MEMBER-AT-LARGE STETKAR: Unfortunately, yours is the most coherent presentation that we have heard about how that list will be developed and when it will be developed and how it will be reviewed --

MR. HILSMEIER: Right.

MEMBER-AT-LARGE STETKAR: -- you know, of any of the COL applicants that we have interfaced with so far.

MR. HILSMEIER: RAP has a long history. The previous guidances were kind of vague in certain areas. That led to these issues.

One of my projects for the past year is to write an ISG to clarify what RAP is.

MEMBER-AT-LARGE STETKAR: Said just shut me off.

I just wanted to ask, I tend to look at RAP and RTNSS as entirely parallel processes. It is just an artifice of what type of machine you are dealing with.

If you have been working for the last year to try to pull together things under the RAP side of that process, have you been working with the RTNSS people at all, or are they just completely separate from you?

MR. HILSMEIER: No, we are all in the same group.

MEMBER-AT-LARGE STETKAR: Okay.

MR. HILSMEIER: And I've been working with them.

MEMBER-AT-LARGE STETKAR: Okay. Good. Thanks.

MR. HILSMEIER: In the ISG, we request/recommend -- it is a guidance, so we can't require -- but we recommend that written SSCs are included

in RAP. It doesn't apply to STP because you're an active plant, but for like other design centers that are passive plants, the written SSCs are included in RAP. Therefore, those written SSCs also go through the RAP program.

MEMBER-AT-LARGE STETKAR: And, in principle, they should be in the COL FSAR?

MR. HILSMEIER: Yes.

MEMBER-AT-LARGE STETKAR: And subject to review?

MR. HILSMEIER: Yes.

MEMBER-AT-LARGE STETKAR: Okay. Thanks.

MR. HILSMEIER: Any other questions?

(No response.)

The next slide, please.

This slide presents the staff's review of the integration of RAP into operational programs. The objective of RAP during the operations phase is to ensure that the reliability/availability of risk-significant SSCs are maintained consistent with their risk-significance.

And the applicant proposed to integrate RAP into the following operational programs:

First, the Maintenance Rule program that is implemented in accordance with Regulatory Guide 1.160,

which endorses NUMARK 93-01 for the Maintenance Rule.

And the risk-significant SSCs will be categorized as having high safety significance. As I mentioned earlier, this means that the risk-significant SSCs are given specific reliability and availability performance criteria based on the reliability/availability of the PRA in general. There's exceptions, like if the passive SSC reliability/availability performance criteria is not practical for passive SSCs. So that we would use condition performance criteria in those cases.

And also, RAP is integrated into the quality assurance program for the operations phase in accordance with the quality assurance program description. And RAP is also integrated into surveillance testing and service inspection and service testing under the Maintenance Rule program.

And the staff concluded that the proposed process for integrating RAP into the operational programs is acceptable, based on the guidances that we review 17.4 against.

The next slide.

The next slide discusses staff review of Section 17.6 on the Maintenance Rule program description.

This section incorporates by reference the generic template in NEI-07-02, which is a generic template of Section 17.6 for a COL application.

The staff wrote an RAI, 17.06-2, requesting the applicant to revise 17.6 to incorporate the latest NEI template guidance, which is 07-02A. NEI 07-02A meets the requirements of SRP 17.6 and has been approved by the NRC. So, this is Confirmatory Item 17.06-2. So, at this time, the staff is unable to finalize its conclusions for this section as a result of the confirmatory item.

MR. ANAND: In summary, the NRC staff has reviewed has reviewed the applicant's quality assurance program for the design, fabrication, construction, testing, and operation of the STP Units 3 and 4. Based upon its review, the staff has identified two open items related to risk-significant SSCs and will discuss these open items in detail during the Chapter 19 presentation to the ACRS Subcommittee.

The other open item is related to QAPD, and it is expected to be addressed in the next future revision of the QAPD, as a result of the latest revision to NEI template 06-14A, Revision 8.

Therefore, the staff is unable to finalize

its conclusion concerning Chapter 17, quality assurance program in accordance with the NRC requirements at this time. However, the staff has a path forward to close all these open items in Draft Safety Evaluation Report.

Now the staff is ready to take additional questions the Subcommittee might have.

CHAIRMAN ABDEL-KHALIK: Are there any questions to the staff?

(No response.)

Well, thank you very much.

MR. ANAND: Thanks.

CHAIRMAN ABDEL-KHALIK: At this time, I would like to open the phone line in case there are members --

MR. HEAD: I am sorry. I didn't know exactly where you were in closure. I apologize.

But on this last discussion on the DRAP, I would like to note the existence of the ITAAC that is a closure mechanism for the DRAP process. So, I think we will engage the staff and discuss that some more, and it may be a follow-up item that we will come back and discuss maybe in a future discussion.

That ITAAC exists, and I believe it is -- you know, I want to make sure that --

CHAIRMAN ABDEL-KHALIK: Thank you.

MEMBER-AT-LARGE STETKAR: I think our concern, as kind of I mentioned, is that it has been very, very difficult for us, as a Committee, to understand how the DRAP list, you know, the population of the list -- I understand, theoretically, what is going to be done with the equipment, once the list is populated in terms of operational reliability assessment.

Both DRAP and, in a parallel sense, the RTNSS equipment, where and when, indeed, those lists will be populated and how the process that the staff will use to review the lists, not just the theoretical process of how those lists are populated, but the actual population of those lists, and your qualification gives me somewhat continuing unease about that.

MR. HEAD: Okay. Like I say, we will explore whether or not we want to follow up just exactly how that list, when that list occurs, and when it takes place within the respective review process.

MEMBER-AT-LARGE STETKAR: Yes, that is the reason I was asking.

CHAIRMAN ABDEL-KHALIK: Why don't we take that as a follow-up item, then, from this Chapter?

MR. HEAD: All right.

CHAIRMAN ABDEL-KHALIK: Okay?

MEMBER SIEBER: Do STP Units 1 and 2 do something similar to this in the QA classification space?

MR. STILLWELL: Yes, it does.

MEMBER SIEBER: Yes, maybe you could briefly describe that because that is a piece of experience that is out there.

MR. STILLWELL: That's why we think we can do it.

MR. HEAD: Yes, between great quality assurance and the special treatment exemption, and, then, that was then transferred over into, basically, the secondary side of the plant, we have been doing this for, we think, at least 10 years. I have personally risk-ranked over 100,000 components.

(Laughter.)

So, we have been doing it, but I was really addressing the licensing process with my response. That was my --

MEMBER-AT-LARGE STETKAR: And that was the source of my question, too.

MEMBER SIEBER: Yes. Well, when that came up with Units 1 and 2, my concern was to try to establish where there was a difference in reliability between COTS equipment and the old COQA Class 1 equipment. I did look

at some of your data and couldn't find it. I couldn't find a difference.

MR. STILLWELL: To date, and it has been two years since I was really actively involved in it, we have not seen any changes in failure rate, our operating experience for the components that we rank and put into the treatment process.

MEMBER SIEBER: Yes.

MR. STILLWELL: But, again, it is only 10 years or five years.

MEMBER SIEBER: I'm not sure that every licensee could achieve that.

MR. TONACCI: Excuse me. This is Mark Tonacci.

We just got a follow-up item, but I didn't actually hear the question. It was kind of fuzzy. Can we restate what the followup is?

MEMBER-AT-LARGE STETKAR: I think what we would like to understand is when, related to the issuance of the COL, will the DRAP list be populated to the extent that it can be considered -- I don't want to use the word "complete" because people are going to hang on that word -- can be populated to an extent that there is agreement that there's been a comprehensive evaluation

of both safety-related and non-safety-related risk and deterministic criteria, that that process has worked, that there is a list that the applicant presents, and that list, indeed, has been reviewed by the staff.

Now if that is not going to be done as part of the COL Safety Evaluation, we would like to know that as soon as possible because, then, it falls over to ITAAC space, which is a completely different type of staff audit function.

MEMBER SIEBER: Yes, it is.

MEMBER-AT-LARGE STETKAR: And quite honestly, a function that we don't get involved in at all, or haven't yet.

(Laughter.)

MR. HILSMEIER: I can answer that now. We expect the list to be essentially complete before issuance of the COL.

MEMBER-AT-LARGE STETKAR: I heard that, and I heard what Scott had said.

MR. HEAD: It won't be a final list at that point. I mean --

MEMBER-AT-LARGE STETKAR: As I said, I want to avoid the words "complete", "100 percent", "final", but I also want to have some confidence that it is simply

not a description of a program or some subset of things that the PRA has cranked out, but it hasn't gone through the rest of the process.

MR. HEAD: I think it is a good thing for us to be able to clarify. So, I appreciate it.

CHAIRMAN ABDEL-KHALIK: Okay. All right.

You got that, Mark?

MEMBER-AT-LARGE STETKAR: It is basically a process in making sure that we understand where we are going to be in terms of the DRAP list and its review at the COL.

CHAIRMAN ABDEL-KHALIK: At this time, I would like to open the phone line to provide an opportunity for members of the public who may have joined us by telephone to either make a statement or ask a question.

Is there anybody on the line who would like to make a statement?

MR. McINTYRE: Yes, I have a question.

CHAIRMAN ABDEL-KHALIK: Yes, sir. Please identify yourself.

MR. McINTYRE: This is John McIntyre from Charlotte, North Carolina.

There was a term used in the presentation that I was not aware of, and I'm not sure if I heard

it correctly, but it was, from what I heard, RTNSS SSC.

CHAIRMAN ABDEL-KHALIK: Okay. Do you want to take it, Todd?

MR. HILSMEIER: Yes. RTNSS SSCs, the acronym stands for Regulatory Treatment Non-Safety Systems. It is a program that was developed for passive reactors.

One of the concerns with the passive reactors is that there's insufficient operating experience to show that these passive -- we believe the passive systems are reliable, but there is insufficient operating experience to show that.

So, we developed the RTNSS program, which ensures that the non-safety-related systems that provide the backup to the passive safety-related systems are reliable and functional. So, the RTNSS program ensures that the non-safety-related SSCs that provide like a back-up function to the passive safety-related SSCs would function reliably, that they have high reliability. So, RTNSS is geared towards improving or ensuring that those non-safety systems are reliable.

MEMBER-AT-LARGE STETKAR: Well, I think, Todd, one of the keys for the gentleman who is on the bridge line is that, by regulation, RTNSS does not apply

to so-called active plants like South Texas.

MR. HILSMEIER: Correct.

MEMBER-AT-LARGE STETKAR: It is kind of an analogous set of equipment, but it applies to the passive plant designs, like AP1000 and ESBWR.

MR. HILSMEIER: Right.

MEMBER-AT-LARGE STETKAR: The only reason I brought it up in this context is, technically, it is kind of an analogous set of equipment, where it is potentially important to safety equipment, but not safety-related and additional regulatory attention is paid.

CHAIRMAN ABDEL-KHALIK: Mr. McIntyre, does this answer your question?

MR. McINTYRE: Yes, it does. Thank you for the explanation.

CHAIRMAN ABDEL-KHALIK: Sure.

Is there anybody else on the line who would like to make a statement?

(No response.)

Is there anybody else on the line who would like to ask a question?

(No response.)

All right. At this time, I guess we will

close the lines again.

On the schedule, we are supposed to sort of go around and discuss amongst the Subcommittee any comments, and we have pretty much kept track of all the open items chapter by chapter. But if there are any additional comments that the Subcommittee members would like to add to that, we can do that at this time.

Jack?

MEMBER SIEBER: Well, during my review of the documents that formed the basis for this meeting, the issues that I had I have brought to both the applicant's attention and the staff's attention, and they have been dispositioned.

And some other issues have come up which I thought about during the review, but others brought them up before I got the opportunity. So, I thank the other members for apparently a good review job.

I am satisfied with the outcome of this meeting.

CHAIRMAN ABDEL-KHALIK: Okay, thank you.

John?

MEMBER-AT-LARGE STETKAR: No, I don't have anything, other than to say thanks a lot. I mean I thought your presentations, both the applicant and staff did

a really good job. And I really appreciate your rapid and forthcoming feedback on all the detailed technical stuff. So, I appreciate it. Thank you very much.

CHAIRMAN ABDEL-KHALIK: Sam?

VICE CHAIRMAN ARMIJO: No, nothing.

CHAIRMAN ABDEL-KHALIK: Charlie?

MEMBER BROWN: No, nothing.

I do appreciate the response to one of my earlier questions. They answered it at one of the breaks. I appreciated that.

Good discussion. Thank you.

CHAIRMAN ABDEL-KHALIK: Okay.

Well, at this time, let me add my thanks and appreciation to both STP and the staff for doing a good job. Thank you very much.

The meeting is adjourned.

(Whereupon, at 4:15 p.m., the proceedings in the above-entitled matter were adjourned.)

1
2
3
4
5
6
7
8
9
10
11

United States Nuclear Regulatory Commission

Protecting People and the Environment

Presentation to the ACRS ABWR Subcommittee

South Texas Units 3 and 4 COL Application Review

Action Items from March 2, 2010, Meeting

March 18, 2010

U.S.NRC
UNITED STATES NUCLEAR REGULATORY COMMISSION
Protecting People and the Environment

ACRS Action Items For Discussion

- Part 21 Notifications and Stability Issue
- Fuel Topical Reports/Fuel Amendment
- Japanese ABWR Dose Comparisons
- Uncertainty of the Effluent Releases Predicted by the Current GALE Code

United States Nuclear Regulatory Commission

Protecting People and the Environment

Part 21 Notifications and Stability Issue

U.S.NRC
United States Nuclear Regulatory Commission
Protecting People and the Environment

Notifications under Part 21

- All Part 21 submittals are reviewed by NRC.
- DCIP identifies technical areas of concern and forwards to appropriate NRO branches.
- Technical branch chiefs assess applicability to applications under their review.
- Issues of general concern addressed in generic communications.
- Formal procedure for dealing with Part 21 issues in LIC-403.
- Part 21 issues associated with a certified design are to be identified upon a COLA referencing that design.

U.S.NRC
United States Nuclear Regulatory Commission
Protecting People and the Environment

Part 21: Stability Analysis

- 2001-23-5,GE, 8-31-2001, Potentially non-conservative stability detect and suppression trip set points
- STP3/4 which is an Option III plant is committed to confirm the accuracy of the cycle specific DIVOM (Delta CPR/Initial CPR Vs Oscillation Magnitude) curve
- STPNOC will provide an updated Stability Option III analyses including resolution of the Part 21 issues before fuel load (COM 4.4-3)

United States Nuclear Regulatory Commission

Protecting People and the Environment

Fuel Topical Reports/Fuel Amendment

U.S.NRC
United States Nuclear Regulatory Commission
Protecting People and the Environment

Fuel Topical Reports (TR)/ Fuel Amendment

- TRs are in support of STPNOC's future fuel amendment request (2013) and are not addressed part of the RCOL
- Coordination between the ABWR, Power Uprate and Thermal Hydraulic Phenomena subcommittees has begun for TRs with dual applicability for ABWRs and BWRs
- First TR is currently under staff review, expected to be finished Fall 2010.
- Subsequent TRs will be available for ACRS review and presentation as they are received from STPNOC

United States Nuclear Regulatory Commission

Protecting People and the Environment

Japanese ABWR Dose Comparisons

U.S.NRC
United States Nuclear Regulatory Commission
Protecting People and the Environment

Comparison of Estimated Annual Occupational Dose for STP and ABWR

- Only one data point is available for an individual ABWR
- Kashiwazaki-Kariwa, Units 6 & 7 (K-6/7) for 1997 to 2004
- K-6/7 = **0.49** person-mSv/MW-yr
- STP 3 & 4 = **0.82** person-mSv/MW-yr (Calculated assuming 85% operating capacity)

US and Japanese BWR Occupational Dose Data

	Average Collective Dose (person-Sv)	person-mSv/MW-yr
Average Japanese Improved BWR ('93-'03) =	1.13	Unavailable
Kashiwazaki-Kariwa Units No. 6 and 7('97-'04) =	0.546	0.49
Estimated South Texas Unit 3 & 4 (per unit) † =	**0.909**	**0.82**

† Estimated STP 3 & 4 person-mSv/MW-yr based on the following assumptions:

Max Dependable Electrical Output = 1300 MWe
Maximum Dependable Capacity Achieved = 85% (US average 1973-2008)
Electrical Generation (MW-yr) = 1105
Estimated Annual Occupational Dose (person-mSv/yr) = 909

=> 909 (person-mSv/yr) / 1105 (MW-yr) = 0.82 person-mSv/MW-yr
or
=> 909 (person-mSv/yr) / 1196 (MW-yr) = 0.76 person-mSv/MW-yr
[if assume 92% capacity (US average 2000-2008)]

References:

‡ Compiled from data contained in ISOE Asian Technical Center, ISOE Information Sheet 2, 4, 6, 8, 12, 14, 16, 18, 21, 26, 28, 29, 30, 32, and 33. Published 1995 to 2009
** Approximate value from ISOE Asian Technical Center, ISOE Information Sheet 33, Figure 2, 2009
+ Compiled from data in Table 4-1 of NUREG 0713, Volume 30
++ Converted to SI units from data in Table 4-1 of NUREG 0713, Volume 30
* Improved plants came into commercial operation in and after FY 1983 with improved design features intended for enhanced reliability, lower exposure and more efficient inspection works. (Includes Kashiwazaki-Kariwa Units No. 6 and 7 beginning in 1996 and 1997)
⁑ Average of Conventional and Improved BWR values

US and Japanese BWR Occupational Dose Data

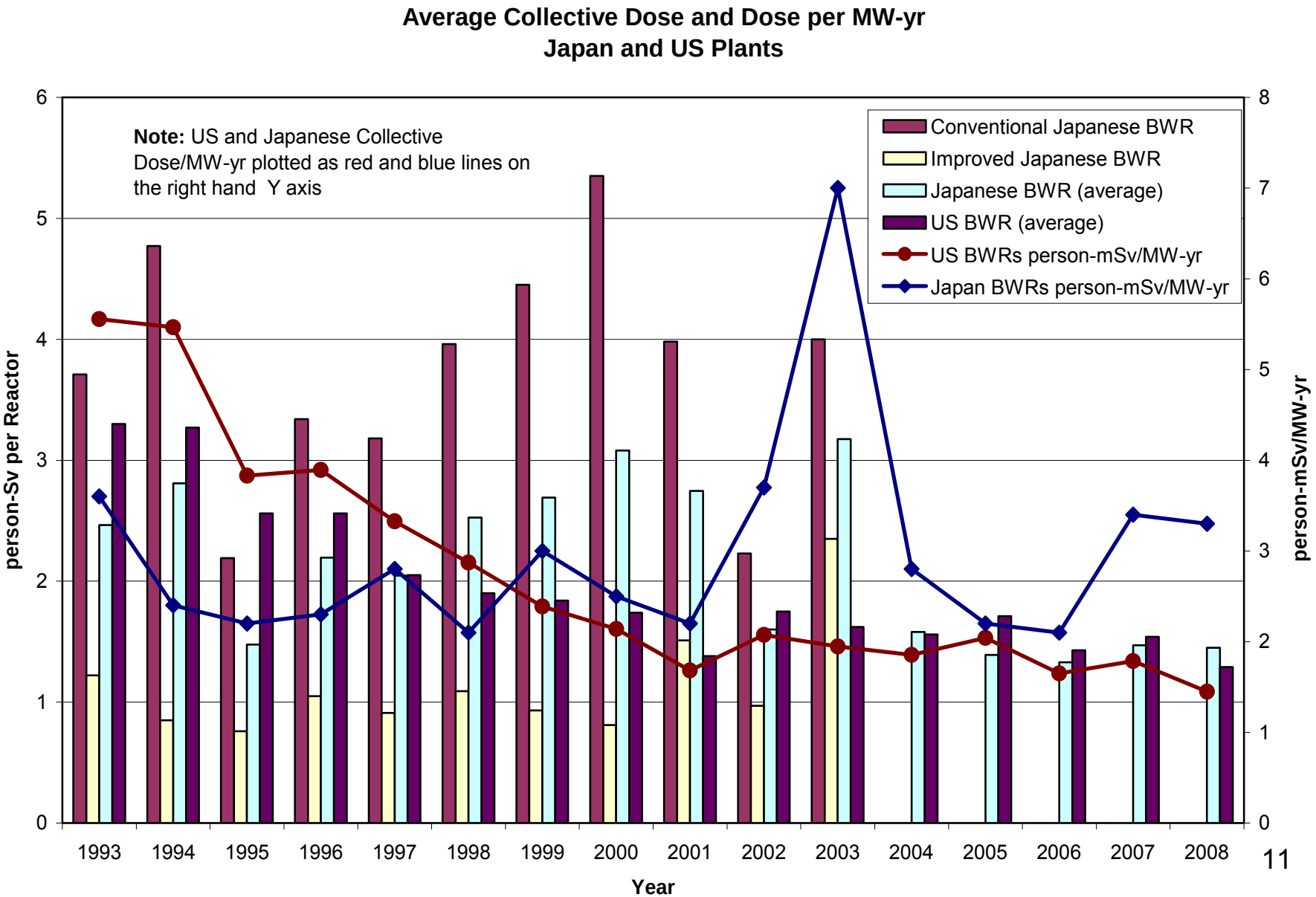

United States Nuclear Regulatory Commission

Protecting People and the Environment

Uncertainty of the Effluent Releases Predicted by the Current GALE Code

U.S.NRC
United States Nuclear Regulatory Commission
Protecting People and the Environment

Staff Answered Two Questions:

- Are the structures and algorithms in GALE86 relevant to present designs?

- How accurate is GALE86 when used to predict effluent releases from new reactors?

U.S.NRC
United States Nuclear Regulatory Commission
Protecting People and the Environment

Are the structures and algorithms in GALE86 relevant to present designs?

Yes

- Radionuclide reactor coolant concentrations based on ANS 18.1
- New reactor designs for radioactive waste management systems are just variations of the same processes modeled in GALE86

How accurate is GALE 86 when used to predict effluent releases from new reactors?

- GALE86 over predicts most liquid and gaseous effluents by at least a factor of 2, and in most cases an order of magnitude or more
- GALE86 predictions for H-3 and C-14 are reasonably accurate

U.S.NRC
United States Nuclear Regulatory Commission
Protecting People and the Environment

Action Items from March 2, 2010, Meeting

Discussion/Committee Questions

South Texas Project Units 3 & 4 Presentation to ACRS Subcommittee

ACRS Follow-up Items

Topics:

(1) Japanese Occupational Dose Experience

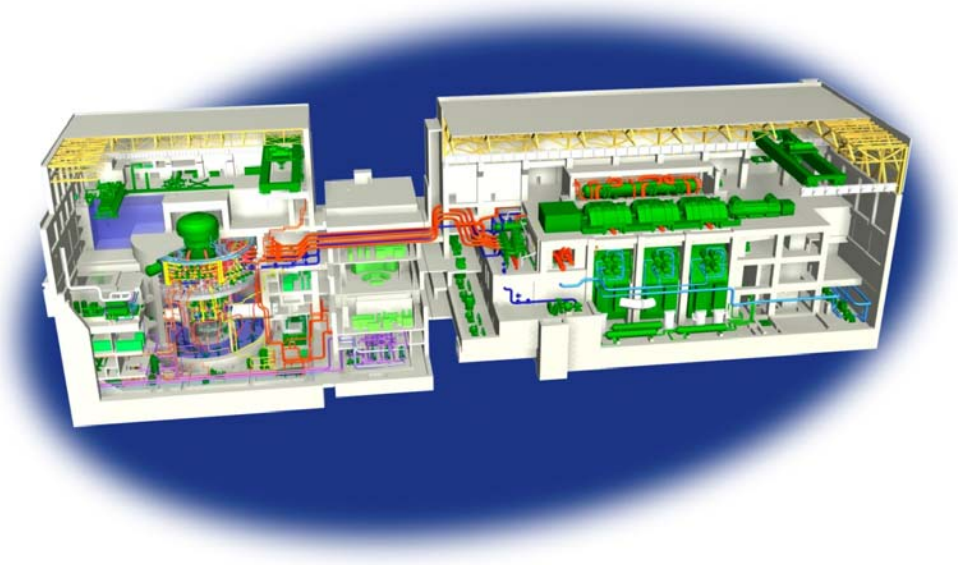

Approximate dose during Outages (average from 1997 to 2002, BWR)

<u>Kashiwazaki-Kariwa</u>

- K1 through K5 are BWR-5 plants
- K6 and K7 are ABWR

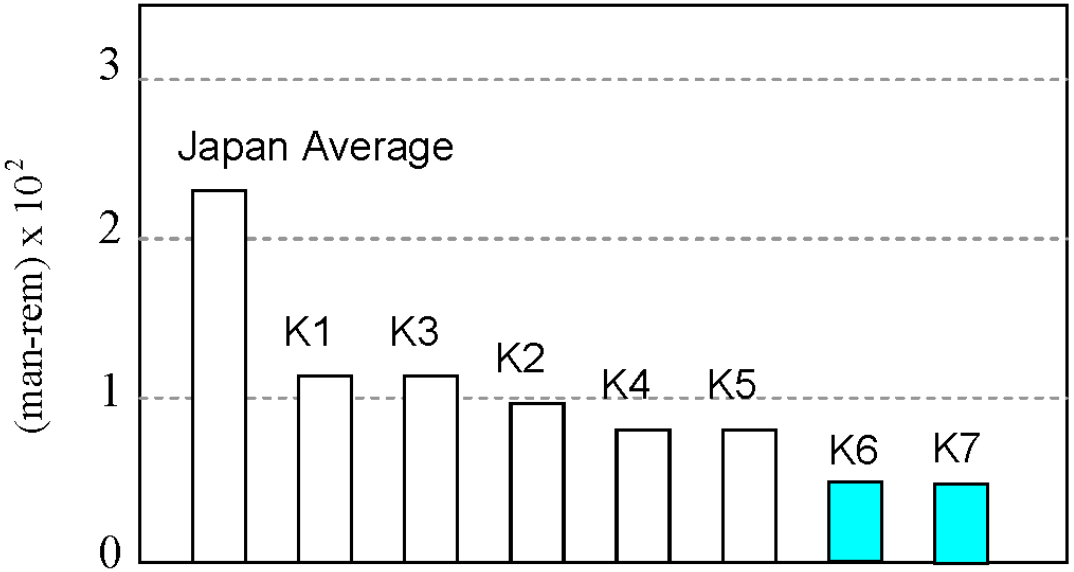

Summary of data provided by TEPCO, Tokyo Electric Power Company, Owner/Operator of BWR plants since 1971.

South Texas Project Units 3 & 4
Presentation to ACRS Subcommittee
Chapter 5: Reactor Coolant System and Connected Systems

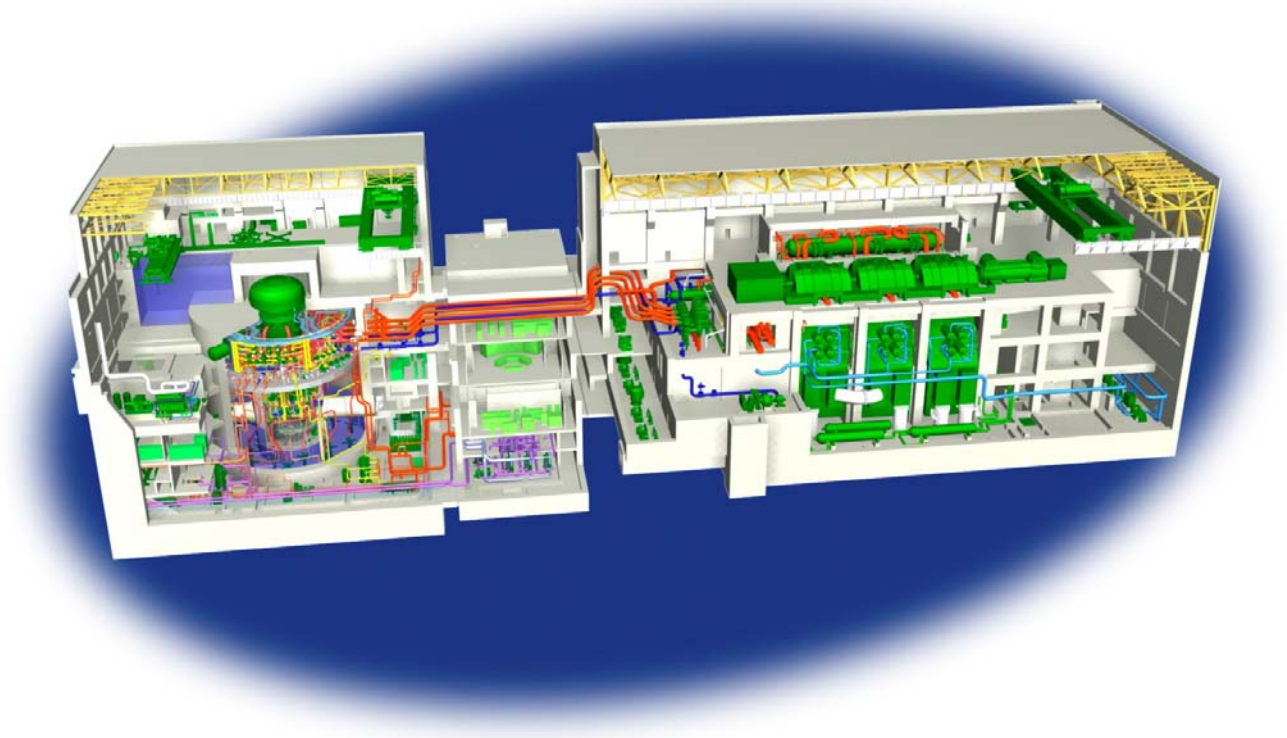

Agenda

- Introduction
- Contents of FSAR Chapter 5
  - Departure Information
  - Site-Specific Supplements
  - COL License Information Items
- ITAAC

Attendees

Scott Head	Regulatory Affairs Manager, STP 3&4
Thomas Daley	Engineering Supervisor, STP 3&4
Bill Stillwell	PRA Supervisor, STP 3&4
Coley Chappell	Licensing, STP 3&4

Chapter Summary and Contents

5.1 Reactor Coolant System and Connected Systems

5.2 Integrity of Reactor Coolant Pressure Boundary

5.3 Reactor Vessel

5.4 Component and Subsystem Design

5A (Deleted)

5B RHR Injection Flow And Heat Capacity Analysis Outlines

STD DEP T1 2.4-3 RCIC Turbine/Pump

- Improved Monoblock Design (pump and turbine within same casing)
- System simplification removes requirements for:
  - Oil lubrication or oil cooling system (totally water lubricated)
  - Shaft seal
  - Barometric condenser
  - Steam bypass line for startup
  - Vacuum pump and associated penetration piping or isolation valves
- Meets or exceeds all safety-related performance criteria
  - Start time and flow rate
  - Low steam pressure operation

Tier 2 Departures

STD DEP 5.2-2: PSI/ISI NDE of Reactor Coolant Pressure Boundary

- Changed requirements for weld NDE from RG 1.150 to ASME Section XI, Appendix VIII

STD DEP 5.3-1: Reactor Pressure Vessel Material Surveillance Program

- Clarified the number of test specimens and lead factor.
- Program is addressed in COL License Information Item 5.5.

STD DEP 5.4-1: Reactor Water Cleanup System

- Flow capacity of pumps doubled: 1% of rated feedwater flow to 2%
- Pump discharge shutoff head increased: 160 m to 182 m.
- Pumps/heat exchanger design pressure increased: 10.20 to 10.65 MPaG.

STD DEP 5.4-2: Reactor Internal Pump (RIP) Motor Cable Box

- Reduced size of cable box, and added plug-in type power connector.

STD DEP 5.4-3: Residual Heat Removal System Interlock

- Clarified that wetwell spray is used with suppression pool cooling mode.

Tier 2 Departures (cont)

STD DEP 5.4-4: Recirculation Motor Cooling System

- Recirculation motor heat exchanger shell, tube sheet and water box material is carbon steel or stainless steel: description of connection points is deleted to permit both materials, to enhance resistance to flow accelerated corrosion (FAC).

STD DEP 5.4-5: Addition of Vent Line from Reactor Water Cleanup System Spray Line to RPV Head Vent Line

- Prevents accumulation of hydrogen in the RPV Head Spray Line.

STD DEP 5A-1: Delete Appendix on Compliance With RG 1.150

- Ultrasonic examination of RPV will be conducted in accordance with ASME Section XI, Appendix VIII.

STD DEP 5B-1: Residual Heat Removal Flow and Heat Capacity Analysis

- Increases the heat removal capacity of the RHR heat exchangers to allow reduced outage time.

COL License Information Items

5.1 Conversion of Indications

- Surveillance procedures convert drywell leakage indications into a common leakage equivalent for unidentified and identified leakage to ensure Technical Specification leakage requirements are met (FSAR Section 5.2.6.1)

5.2 Plant Specific ISI/PSI

- Program will be based on the 2004 Boiler and Pressure Vessel Code section XI (FSAR Section 5.2.6.2)

5.3 Reactor Vessel Water Level Instrumentation

- Backfill water flow to the instrument reference leg is supplied by the Control Rod Drive System to prevent formation of gas pockets in the reference leg (FSAR Section 5.2.6.3)

5.4 Fracture Toughness Data

- Data based on the actual RPV materials will be provided in the FSAR amendment that occurs one year after acceptance of the RPV on site (FSAR Section 5.3.4.1)

COL License Information Items (cont)

5.5 Materials & Surveillance Capsule

- Program will be in accordance with "Reactor Pressure Vessel Material Surveillance Program", Toshiba Corporation, April, 2009 (UTLR-0003, Rev. 0) (FSAR Section 5.3.4.2)

5.6 Plant Specific Pressure-temperature Information

- Plant specific calculations for $RT_{NDT,}$ stress intensity factors, and pressure-temperature curves similar to those in RG 1.99 and SRP 5.3.2 will be provided in a FSAR amendment prior to receipt of fuel (FSAR Section 5.3.4.3)

5.7 Testing of Main Steam Isolation Valves

- Testing of MSIVs under operating conditions will be conducted during the initial test program (FSAR Section 5.4.15.1)

COL License Information Items (cont)

5.8 Analysis of 8-Hour RCIC Capability

- Capability of RCIC to operate for 8 hours during a SBO event will be demonstrated during the initial test program (FSAR Section 5.4.15.2)

5.9 ACIWA Flow Reduction

- Hydraulic analysis will be performed to determine if a flow reduction device is needed based on actual flow rate capacities, pressure, and hose size. Analysis will be available prior to commencement of Preoperational Test Program. (FSAR Section 5.4.15.3)

5.10 RIP Installation & Verification During Maintenance

- Procedures address RIP installation and verification of motor bottom cover and visual monitoring for leakage during impeller-shaft and plug removal. Contingency plan assures that core and spent fuel cooling can be provided in the event of loss of coolant during RIP maintenance. (FSAR Section 5.4.15.4)

Chapter 5: Reactor Coolant System and Connected Systems

ITAAC

- ITAAC for the RHR system is contained in Tier 1 Subsection 2.4.1, Table 2.4.1
  - Verification of acceptable system flow rates in augmented fuel pool cooling mode of operation

- ITAAC for RCIC system is contained in Tier 1 Subsection 2.4.4, Table 2.4.4
  - Verification of RCIC pump performance
  - Verification of automatic start/stop functions of system

Chapter 5

Questions and Comments

United States Nuclear Regulatory Commission

Protecting People and the Environment

Presentation to the ACRS Subcommittee

SER/OI Chapter 5
"Reactor Coolant System and Connected Systems"

March 18, 2010

ACRS Subcommittee Presentation SER/OI Chapter 5

Staff Review Team

- **Project Managers**
  - George Wunder
  - Tekia Govan

- **Technical Staff**
  - SRSB, Chief, Joseph Donoghue
  - SRSB, Lead Reviewer, George Thomas
  - SBPB, Chief, Samuel Lee
  - SBPB, Lead Reviewer, Chang-Yang Li
  - CIB2, Acting Chief, Neil Ray
  - CIB2, Lead Reviewers, Steven Downey, Timothy Steingass and Thomas Scarbrough

Overview of Chapter 5 Review Topics of Interest

Reactor Vessel Materials	COL Item 5.4: COL applicant to provide fracture toughness data COL Item 5.5: COL applicant to provide a description of their RVSP.
P-T Limits	COL Item 5.6: COL applicant to provide site-specific P-T limits curve.
Preservice/Inservice Inspection	STD DEP VENDOR: PSI/ISI Program STD DEP 5.2-2: Examination Categories STD DEP 5A-1: Ultrasonic Examination of RPV
Rx Coolant Pressure Boundary Leakage	COL Item 5.1: Conversion of Indicators STD DEP 7.3-12: Leak Detection and Isolation System Sump Monitoring
10 CFR 50.55 Compliance and Code Cases	• Updates to Codes and Standards • Updates to Code Cases
RCIC Turbine Design Change	STD DEP T1 2.4-3: RCIC Turbine/PumpSTP FSAR reflects new RCIC turbine-pump design

Summary of Staff Review

- Rx Vessel Materials
- P-T Limits
- Preservice/Inservice Inspection
- Rx Coolant Pressure Boundary Leakage
- Compliance with 10 CFR Part 50 Section 50.55 and Applicable Code Cases
- RCIC Turbine Design Change

Reactor Vessel Materials (5.3.1)

- Fracture Toughness Data
  - ABWR DCD COL Item 5.4
    - COL applicant will provide fracture toughness data based on the limiting reactor vessel materials
  - STP Response
    - fracture toughness data based on limiting RV actual materials will be provided in the first regular FSAR update that occurs 1 year after the onsite acceptance of the RV (COM 5.3-1)
  - Staff Conclusion
    - Resolution of COL item is acceptable (10 CFR 50 Appendix G)

- Materials and Surveillance Capsule
  - ABWR DCD COL Item 5.5
    - COL applicant will provide a description of their RVSP
  - STP Response
    - Provided a topical report containing their RVSP
    - Milestone for RVSP implementation: Prior to fuel load (FSAR Table 13.4-201)
  - Staff Conclusion
    - RVSP is “fully described” (SECY 05-0197)
    - Resolution of COL item is acceptable (10 CFR 50 Appendix G and H)

Pressure-Temperature Limits (5.3.2)

- ABWR DCD COL Item 5.6
  - COL applicant will submit plant-specific P-T limits curves
- STP Response
  - Submitted a generic Pressure and Temperature Limits Report (PTLR), following guidelines of GL 96-03
  - Plant specific P/T limits will be submitted prior to receipt of fuels on site (COM 5.3-3)
- Review and approval of the PTLR tracked as OPEN ITEM

Preservice/Inservice Inspection and Testing of RCPB (5.2.4)

- Section 5.2.4 addresses Preservice and Inservice Inspection and Testing of Class 1 components and piping
- STD DEP VENDOR: PSI/ISI Program
  - Design is based on ASME Section XI requirements with Toshiba responsible for RPV design accessibility to perform PSI and ISI examinations – COL Applicant is responsible for remaining component design accessibility to perform PSI/ISI examinations
  - Staff concluded that the design responsibilities to meet ASME Section XI requirements for PSI/ISI examinations were clearly designated

Preservice/Inservice Inspection and Testing of RCPB *(cont'd)*

- STD DEP 5.2-2: EXAMINATION CATEGORIES
  - COL FSAR stated that PSI would extend to 100% of Class 1 pressure retaining welds and 100% of Category B-O control rod drive housing welds (if incorporated into the design). In addition, evaluations will be performed to assure accessibility to perform ISI examinations
  - The staff concluded that the departures met the requirements of ASME Section XI for scope and accessibility to perform ISI examinations, and were therefore, acceptable
- STD DEP 5A-1: Ultrasonic Examination of RPV
  - COL FSAR stated that the ultrasonic system for examination of the RPV would meet the requirements of ASME Appendix VII and VIII for qualification of personnel and equipment demonstration
  - The staff concluded that the departure met the requirements of ASME Section XI and 10 CFR 50, and is acceptable
- No Open Items

Reactor Coolant Pressure Boundary Leakage Detection (5.2.5)

- The RCPB leakage detection systems are designed to detect and to the extent practical, identify the source of reactor coolant leakage.

- COL Information Item 5.1: Conversion of Indicators
  - Develop the surveillance procedures prior to fuel load to direct operator to convert instrument indicators to a common leakage equivalent.

- STD DEP 7.3-12: Leak Detection and Isolation System Sump Monitoring
  - Change the unidentified leakage TS limit from 1 gpm to 5 gpm.
  - Change the total leakage limit over 24 hours from 25 gpm to 30 gpm.
  - Add alarm limit of 2 gpm within 4 hour period to provide early warning prior to the TS limit.
  - Develop procedures prior to fuel load to respond to prolonged low-level RCS leakage.

- Open Item: Applicant to submit a commitment to complete the above procedures and make available prior to fuel load.

Compliance with 10 CFR 50.55a (5.2.1.1)

- STP FSAR Section 5.2.1.1 incorporates by reference ABWR DCD Section 5.2.1.1 with no departures or supplements
- In RAI response, STP referred to ABWR DCD Tier 2 Table 1.8-21 and STP FSAR Tables 1.8-21 and 1.8-21a for Code edition/addenda to be applied
- STP FSAR Table 1.8-21a will be revised to include ASME OM Code (2004 Edition) for IST program description in support of COL application
- STP FSAR Section 5.2.1.1 acceptable with FSAR update as Confirmatory Item 5.2.1.1-1

Applicable Code Cases (5.2.1.2)

- STP FSAR Section 5.2.1.2 incorporates by reference ABWR DCD Section 5.2.1.2
- STD DEP 1.8-1 states that ASME Code Cases approved in RG 1.84 (Rev. 33) might be used at STP
- Open Item 5.2.1.2-1 indicates STP needs to fully describe Inservice Inspection program, and identify Code Cases in RG 1.84 and RG 1.147 to be applied
- Open Item 5.2.1.2-2 indicates STP needs to fully describe Inservice Testing program, and identify Code Cases in RG 1.192 to be applied

U.S.NRC
UNITED STATES NUCLEAR REGULATORY COMMISSION
Protecting People and the Environment

Applicable Code Cases (5.2.1.2)

- STP clarified use of annulled Code Cases in RAI response
- STP stated in RAI response that FSAR Table 5.2-1 will be updated to specify Code Cases listed in RG 1.84, Revision 33
- STP plan to delete superseded Code Cases from FSAR Table 5.2-1 being tracked as Confirmatory Item 5.2.1.2-5

Reactor Core Isolation Cooling System (5.4.6)

- Standard Departure (STD DEP) T1 2.4-3, “RCIC Turbine/Pump,” from ABWR DCD
- STP FSAR reflects new RCIC turbine-pump design
- Proprietary Toshiba Technical Report UTLR-0004-P (Rev. 0, June 2009), “Application of Turbine Water Lubricated (TWL) Pump to South Texas Project Units 3 & 4 RCIC Turbine-Pump,” describes new RCIC turbine-pump design

RCIC Turbine-Pump Design (5.4.6)

- Monoblock design (pump-turbine within same casing)
- No shaft seal required
- No barometric condenser required
- No oil lubrication
- No steam bypass line required for warm-up
- Less complex auxiliary systems

RCIC Turbine-Pump Design (5.4.6)

- NRC staff reviewed RCIC turbine-pump topical report at STP Rockville office on April 29, 2009
- NRC staff requested STP to submit topical report as proprietary document in support of COL application
- NRC staff prepared RAIs on topical report with STP response provided on July 7, 2009
- NRC staff conducted audit to discuss RCIC turbine-pump design and RAI responses with STP personnel on November 10 and 11, 2009, at STP Rockville office

RCIC Turbine-Pump RAI Responses and Audit Results

- STP indicated in RAI response that RCIC turbine-pump will be qualified using ASME Standard QME-1-2007, but topical report does not specify functional qualification provisions
- Surveillance not specified for small non-safety-related pump that assists with shaft bearing lubrication during standby conditions
- QA program for RCIC turbine-pump will satisfy 10 CFR 50, Appendix B
- RCIC turbine-pump included in IST program as described in FSAR Section 3.9.6
- Potential flow-induced vibration for RCIC turbine-pump will be addressed as specified in ABWR DCD

SER Open Items 05.04.06

- Open Item 05.04.06-1
  - Audit follow-up items:
    - Revise topical report to specify functional qualification provisions for RCIC turbine pump
    - Specify surveillance testing for RCIC standby lubrication pump
- Open Item 05.04.06-2
  - RAI requests STP to submit results of pump calculations showing available NPSH margin when head loss for new ECCS suction strainer is determined

Chapter 5 Review Wrap Up

Due to Open Items and Confirmatory Items, the staff is unable to finalize conclusions concerning Chapter 5, “Reactor Coolant System and Connected Systems” at this time.

U.S.NRC
UNITED STATES NUCLEAR REGULATORY COMMISSION
Protecting People and the Environment

ACRS Subcommittee Presentation
SER/OI Chapter 5

Discussion/Committee Questions

U.S.NRC
United States Nuclear Regulatory Commission
Protecting People and the Environment

STP Chapter 5 Open Item Status: March 18, 2010

OPEN ITEM	TITLE	DESCRIPTION /RESOLUTION
5.2.1.2-1	Code Cases	Applicant requested to provide a full description of ISI to specify Code cases. Pending receipt and staff review.
5.2.1.2-2	Code Cases	Applicant requested to provide a full description of IST to specify Code cases. Pending receipt and staff review.
5.2.3-2	Revised Departure Report STD DEP 4.5-1	Applicant requested to submit modified Departures report to clarify impact of departure. Pending receipt and staff review.
5.2.5-5	FSAR Commitments COL Info Item 5.1STD DEP 7.3-12	Alarm response procedures and Surveillance procedures were promised in the RAI responses, but no commitments were made in the FSAR. Pending receipt and staff review.
5.3.2-1	COL Info Item 5.6 PTLR	Topical Report to support application plant-specific PTLR issues. Currently under staff review.
5.4-2	COL Info Item 5.10 RIP	Applicant requested to provide contingency plan for RIP maintenance. Pending receipt and staff review.
5.4.6-1	RCIC STD SEP T1 2.4-3 (Proprietary section of SER)	Issues involving RCIC turbine-pump design. Staff review and audit pending.
5.4.6-2	RCIC STD SEP T1 2.4-3 (Proprietary section of SER)	NPSH calculations. Pending receipt and staff review.
5.4.7-1	Open item listed in SER	Resolved
5.4.7-8	Open item listed in SER	Resolved

South Texas Project Units 3 & 4
Presentation to ACRS Subcommittee
Chapter 8 Electric Power

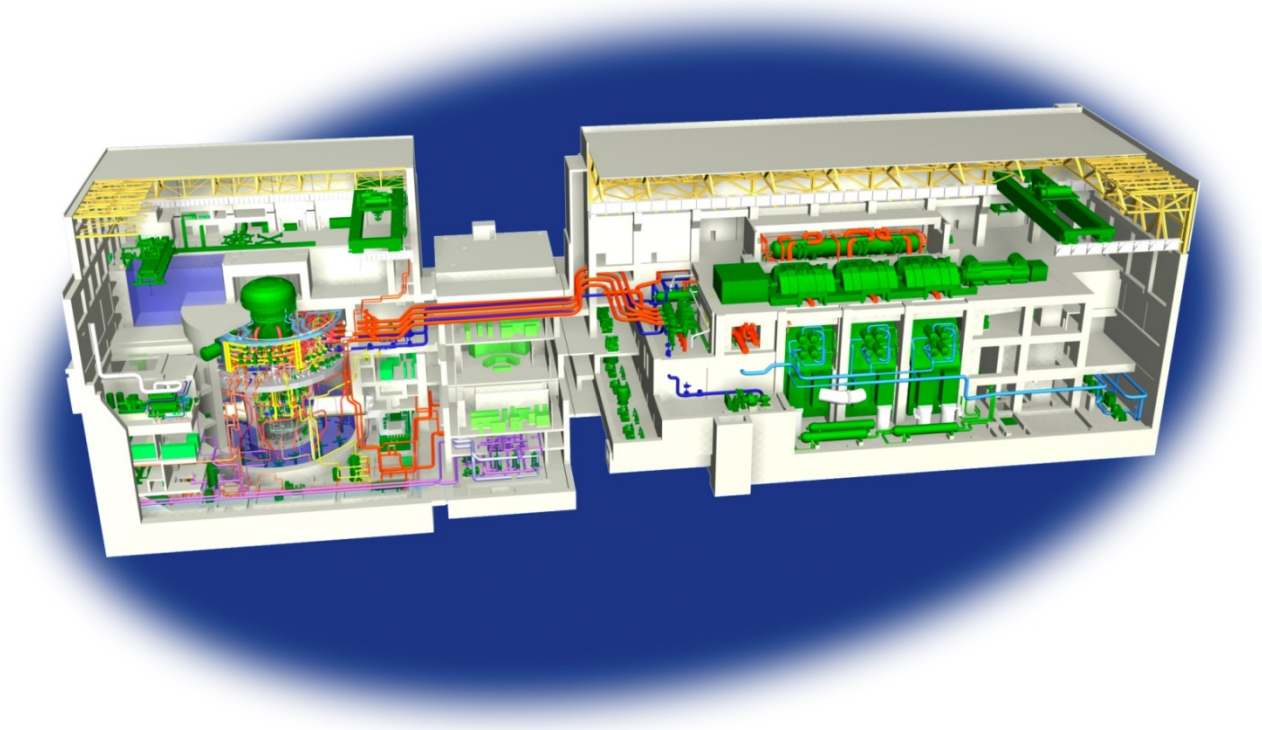

Agenda

- Contents of FSAR Chapter 8
  - Departure Information
  - Site-Specific Supplements
- COL Licensee Information Items
- ITAAC

Attendees

Scott Head	Regulatory Affairs Manager, STP 3&4
Evans Heacock	Design Engineering Lead, STP 3&4
Richard Bense	Licensing, STP 3&4
Coley Chappell	Licensing, STP 3&4
Bill Stillwell	PRA Supervisor, STP 3&4

Chapter 8 Contents

8.1 Offsite Transmission Network

COL Applicant Design Scope

Reliability of the offsite network:

- Six 345 kV transmission lines connect STP 3&4 to transmission systems of three diverse service providers connected via three rights of way.
- Loss of any double-circuit 345 kV line, loss of any two 345 kV lines, or loss of all circuits on any right-of-way does not adversely impact availability of offsite power.
- Grid stability maintained on loss of largest generation source.
- ‘Breaker-and-a-Half’ switchyard configuration provides high reliability and flexibility for maintenance.
- Failure Modes and Effects Analysis shows no single failure prevents offsite power from supporting its safety function during any postulated accident.

8.1 Offsite Transmission Network

345 kV General Arrangement

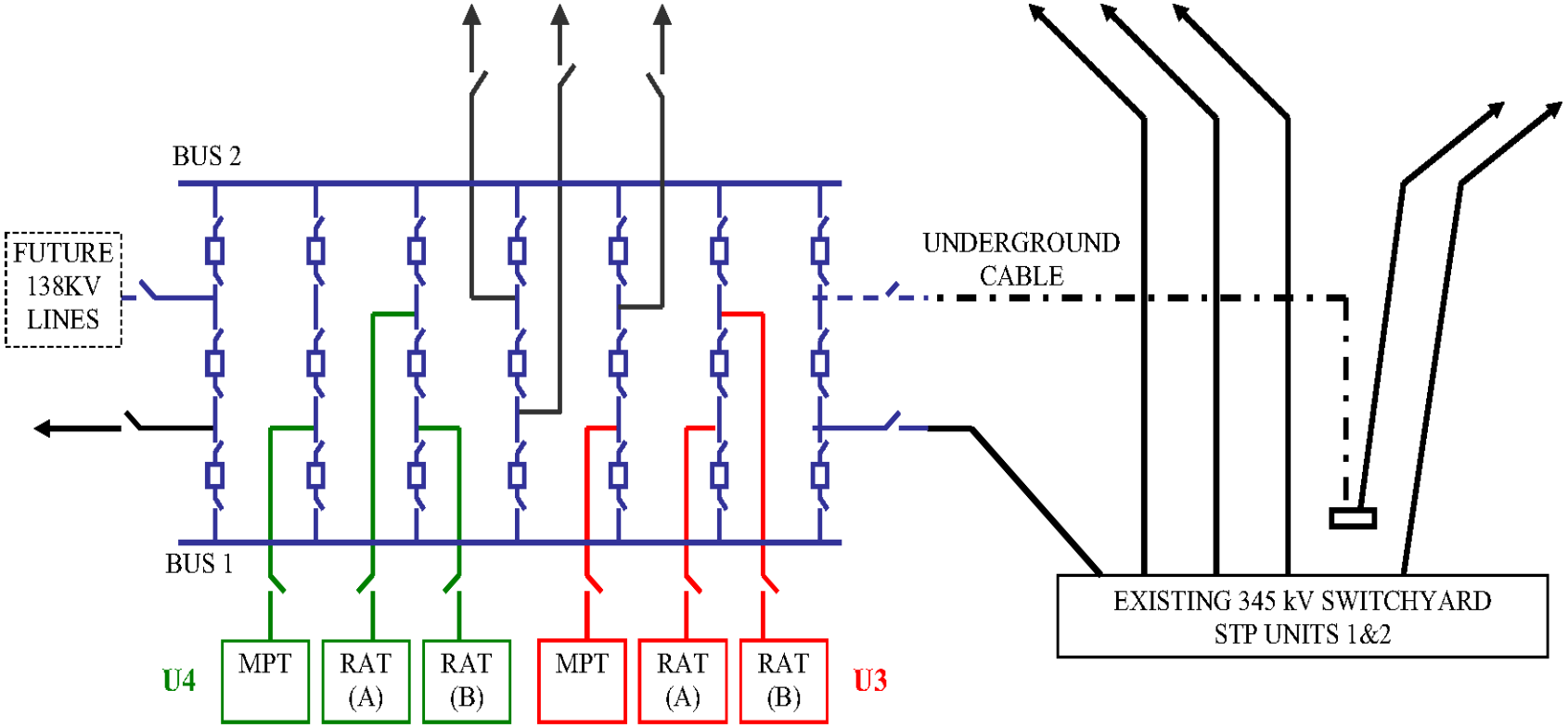

8.2 Offsite Power System and 8.3 Onsite Power System

Plant Medium Voltage Electrical System Design (STD DEP 8.3-1)

Electrical bus voltage changed to a dual system to better accommodate motor driven feed pumps and other large loads and to be consistent with typical US practice:

- Power Generation (PG) bus increased from 6.9 kV (DCD) to 13.8 kV;
- Plant Investment Protection (PIP) bus reduced from 6.9 kV (DCD) to 4.16 kV; and
- Class 1E safety bus reduced from 6.9 kV (DCD) to 4.16 kV.

Plant Medium Voltage Electrical System Design (STD DEP 8.3-1) (cont)

Simplified Electrical Distribution

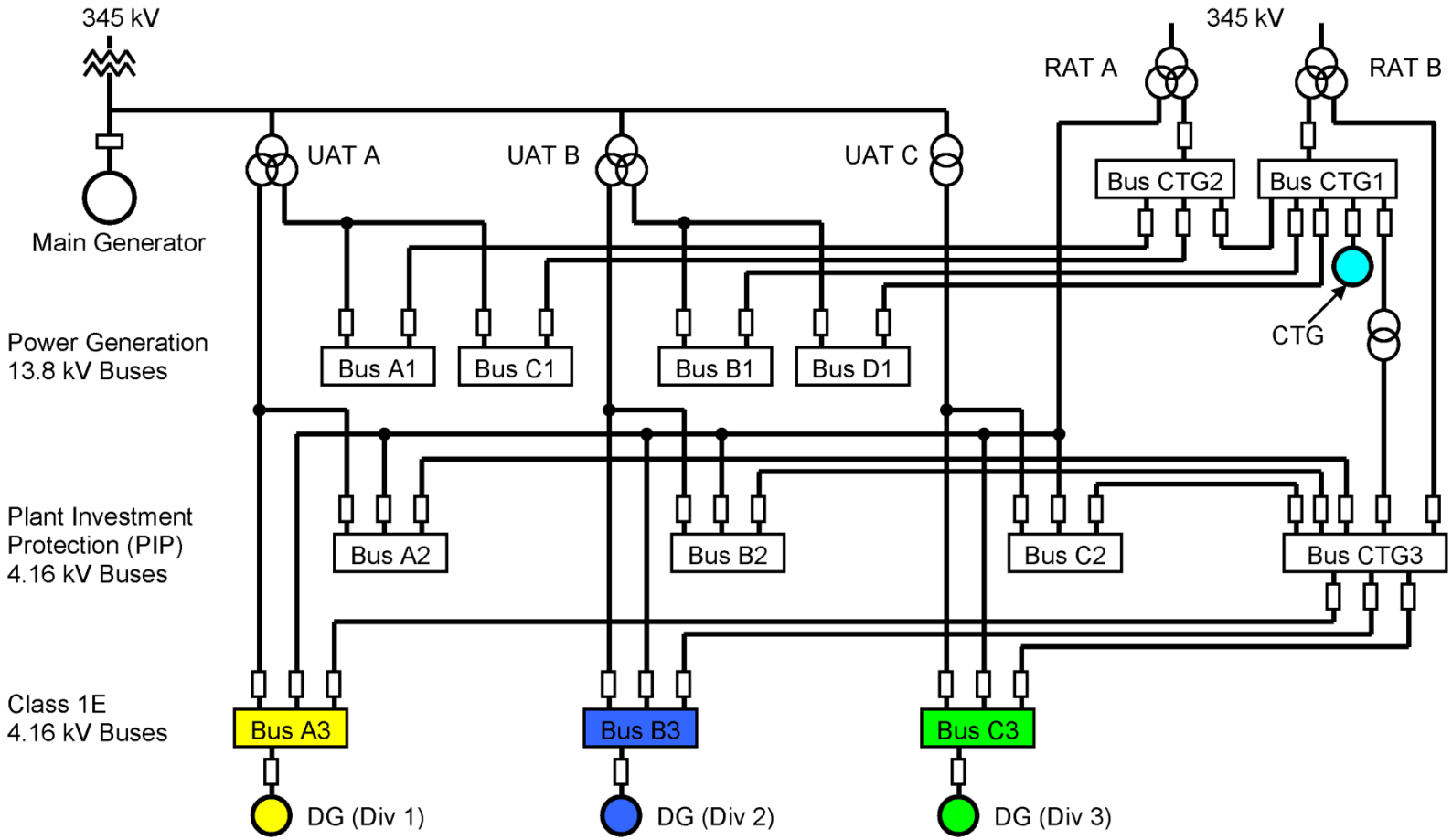

Plant Medium Voltage Electrical System Design (STD DEP 8.3-1) (cont)

- Capacity of onsite power sources increased to accommodate increased site loads:
  - Emergency Diesel Generators (EDG) capacity increased from 5000 kW at 6.9 kV (DCD) to 7200 kW at 4.16 kV.
  - Combustion turbine generator (CTG) capacity increased from 9 MWe (DCD) to a minimum of 20 MWe.
- CTG maximum start time increased from 2 (DCD) to 10 minutes
  - Remains within RG 1.155 limits for Station Blackout (SBO) alternate AC source.
  - CTG can be aligned to support the other unit.
- Second 100% capacity Reserve Auxiliary Transformer (RAT) added to support electric boiler during startup.

8.4S Station Blackout

- Compliance with 10 CFR 50.63, “Loss of All Alternating Current Power,” addressed in Appendix 1C of the COL FSAR.
- CTG provides an alternate source of AC power to PIP buses and Class 1E buses within 10 minutes -- eliminates need for SBO coping analysis consistent with RG 1.155.
- FSAR 19.9.9 and ABWR DCD 19E address Station Blackout Events.

Chapter 8 Tier 1 Departures

I&C Power Divisions (STD DEP T1 2.12-2)

- Fourth regulating transformer and distribution panels added for Instrument and Control Power to improve maintenance and trouble shooting. (Instrument Divisions II and IV both still supplied from Division II Class 1E bus.)

Safety-Related I & C Architecture (STD DEP T1 3.4-1)

- Chapter 8 nomenclature changes to conform with Chapter 7.

Hydrogen Recombiner Elimination (STD DEP T1 2.14-1)

Feedwater Line Break Mitigation (STD DEP T1 2.4-2)

- Condensate pump trip added to provide added assurance of conservatism in the containment response following a FWLB, but is not credited in the FWLB analysis in Chapter 6.2.

Chapter 8 Departures (continued)

Codes, Standards, and Regulatory Guide Edition Changes (STD DEP 1.8-1, Tier 2*)

- IEEE 279 is replaced by IEEE 603.
- IEEE 384 is adopted.

Dual Units at STP 3 & 4 (STP DEP 1.1-2)

- ABWR DCD is a single unit plant design
- STP 3 & 4 ensures GDC 5 is met by limiting shared systems

Electrical Equipment Numbering (STP DEP 8.2-1)

- Electrical Equipment Numbering revised to address site-specific variations for switchyard and other auxiliary structures, routing of power circuits, bus assignments, and nomenclature variations.

Chapter 8 Departures (continued)

Electrical Site-Specific Power and Other Changes (STP DEP 8.3-3)

- Load Tables for Loss of Coolant Accident and Loss of Preferred Power based on load study calculations and EDG and CTG sizing calculations.

COL License Information Items

The 31 COL License Information Items in Chapter 8 ensure that required programs, procedures, and procurement specifications are completed and implemented prior to fuel load:

8.1 Diesel Generator Reliability

8.2 Periodic Testing of Offsite Equipment

8.3 Procedures when Reserve or Unit Aux Transformer is Out of Service

8.4 Offsite Power Systems Design Bases

8.5 Offsite Power Systems Scope Split

8.6 Capacity of Auxiliary Transformers

8.8 Diesel Generator Design Details

8.10 Protective Devices for Electrical Penetration Assemblies

8.15 Offsite Power Supply Arrangements

COL License Information Items (continued)

8.19 Load Testing of Class 1E Switchgear and Motor Control Centers

8.20 Administrative Controls for Bus Grounding Circuit Breakers

8.21 Administrative Controls for Manual Interconnections

8.23 Common Industrial Standards Referenced in Purchase Specifications

8.24 Administrative Control for Switching 125Vdc Standby Charger

8.25 Control of Access to Class 1E Power Equipment

8.26 Periodic Testing of Voltage Protection Equipment

8.27 Diesel Generator Parallel Test Mode

8.28 Periodic Testing of Diesel Generator Protective Relaying

8.29 Periodic Testing of Diesel Generator Synchronizing Interlocks

8.30 Periodic Testing of Thermal Overloads and Bypass Circuitry

COL License Information Items (continued)

8.31 Periodic Inspection/Testing of Lighting System

8.32 Controls for Limiting Potential Hazards Into Cable Chases

8.33 Periodic Testing of Class 1E Equipment Protective Relaying

8.34 Periodic Testing of CVCF Power Supplies and EPAs

8.35 Periodic Testing of Class 1E Circuit Breakers

8.36 Periodic Testing of Electrical Systems & Equipment

8.38 Class 1E Battery Installation and Maintenance Requirements

8.39 Periodic Testing of Class 1E Batteries

8.40 Periodic Testing of Class 1E CVCF Power Supplies

8.41 Periodic Testing of Class 1E Battery Chargers

8.42 Periodic Testing of Class 1E Diesel Generators

ITAAC

Incorporated by Reference with the following exception:

Electrical Breaker/Fuse Coordination and Low Voltage Testing (STD DEP T1 2.12-1)

- Circuit breaker and fuse coordination changed from “closest to the fault opens first” to include “to the maximum extent possible.”
- Field testing of electrical components at “analyzed minimum voltage” replaced with manufacturer's type tests over the voltage operating range combined with onsite system preoperational and startup testing.
- Field testing of DC loads at both “minimum battery voltage and maximum charger voltage” replaced by manufacturer's type tests over the operating voltage range combined with onsite system preoperational and startup testing.

Chapter 8
Electric Power

Questions and Comments

United States Nuclear Regulatory Commission

Protecting People and the Environment

Presentation to the ACRS Subcommittee

South Texas Units 3 and 4 COL Application Review

SER/OI Chapter 8.0
"Electric Power"

March 18, 2010

Summary of Technical Discussion Points for South Texas COL Chapter 8

FSAR Section		Summary of Supplemental Information
8.1	Electric Power Introduction	Departures of interest evaluated in Section 8.3.1. Tier 2* departure and open item.
8.2	Offsite Power Systems	Brief description of evaluation of offsite power system and COL information items. Tier 2 departure requiring prior approval discussed in Section 8.3.1. Open item 8.2-3 regarding inaccesible/underground cables.
8.3.1	Onsite AC Power Systems (AC)	Departures 8.3-1 (T2) and 2.2-12 (T1), and COL information items and open item 8.3.1-1 regarding diesel inlet air temperature..
8.3.2	Onsite DC Power Systems	Brief description of evaluation of onsite power system
8.4S	Station Blackout	Brief description of evaluation of Station Blackout and COL information items

U.S.NRC
UNITED STATES NUCLEAR REGULATORY COMMISSION
Protecting People and the Environment

USABWR STP COL – Review Topics of Interest Section 8.0 – Electric Power

- COL application contains:
  - Interface Requirements
  - COL Information Items
  - Supplemental Information
  - Site specific information on the following:
    - Offsite power system
    - Onsite power system (Electrical load increases)
    - SBO coping durations

- COL application identified 14 departures

- COL review included:
  - Confirming that all COL Information Items identified in USABWR DCD are addressed
  - Determining whether the STP COL FSAR information provided sufficient level of detail for offsite power, onsite power, and SBO.

USABWR STP COL – Review Topics of Interest

Section 8.1 – Site Specific Information

- **Section 8.1 –** Addresses staff review of applicable design bases, criteria, regulatory guides, standards, and other documents to be implemented in the design of the electrical systems that are beyond the scope of the design certification.

- **Specific items of interest:**
  - One Open Item regarding applicability of RG 1.180 to solid state and digital components used in safety-related system.
    - The open Item is resolved based on the additional information received from the applicant.
  - COL Information Item is adequately addressed.

- **Section Conclusion**
  - As result of Open Item, the staff is unable to finalize its conclusion

USABWR STP COL – Review Topics of Interest

Section 8.2 – Offsite Power System

- **Section 8.2 -** Addresses staff review of offsite power systems includes two or more physically independent circuits. It encompasses the grid, transmission lines, switchyard components, etc. that supply electric power to safety-related and other equipment and is capable of operating independently of the onsite standby power sources.

- **Specific items of interest:**
  - Four Open Items
    - Three Open Items resolved based on additional information received.
    - Open Item regarding program for testing and inspection of inaccessible or underground power and control cables is not resolved.

  - COL License Information Items are adequately addressed

U.S.NRC
UNITED STATES NUCLEAR REGULATORY COMMISSION
Protecting People and the Environment

USABWR STP COL – Review Topics of Interest

Section 8.2 – Offsite Power System (continued)

- **Specific items of interest (Cont'd):**
  - Supplemental Information – Transmission lines, Switchyard Description, Main Power Transformer, and RATs, Failure Modes and Effect Analysis, and Grid Analysis
  - Interface Requirements

- **Section Conclusion**
  - As result of Open Items, the staff is unable to finalize its conclusion.

U.S.NRC
UNITED STATES NUCLEAR REGULATORY COMMISSION
Protecting People and the Environment

USABWR STP COL – Review Topics of Interest

Subsection 8.3.1 – Onsite AC Power System

- **Subsection 8.3.1** Addresses staff review of standby power sources, distribution systems, and auxiliary support systems that supply power to safety-related equipment or equipment important to safety for all normal operating and accident conditions.

- **Specific items of interest:**
  - Two Open Items
    - Applicant provided additional information to resolve one Open Item.
    - Open item regarding diesel room temperature increase is not resolved.
  - COL License Information Items are adequately addressed

U.S.NRC
UNITED STATES NUCLEAR REGULATORY COMMISSION
Protecting People and the Environment

USABWR STP COL – Review Topics of Interest

Subsection 8.3.1 – Onsite AC Power System (continued)

- **Specific items of interest (Continued):**
  - STD DEP 8.3-1 changed voltage rating of PG bus from 6.9 kV to 13.8 KV, PIP bus from 6.9 kV to 4.16 kV and Class 1E buses from 6.9 kV to 4.16 kV. Additionally EDG rating is changed from 5000 KW to 7200 KW, CTG rating is changed from 9 MW to 20 MW. An additional RAT was included.
  - STP DEP T1 2.12-2 added a fourth Class 1E I&C interruptible power supply to increase reliability and availability. It is an improvement from the DCD design.
- **Section Conclusion**
  - As result of Open Items, the staff is unable to finalize its conclusion.

USABWR STP COL – Review Topics of Interest

Subsection 8.3.2 – Onsite DC Power System

- **Subsection 8.3.2** Addresses staff review of the four independent Class 1E DC divisions to provide reliable power for safety-related equipment for the plant instrumentation, control, monitoring, and other vital functions needed to shut down the plant and non-Class 1E DC power systems.

- **Specific items of interest**:
  - One Open Item identified in current SER.(This open item is discussed in Section 8.3.1)
    - Applicant provided additional information to close this Open Item.
  - COL License Information Items are adequately addressed.

  Section Conclusion
  - As result of one Open Item, the staff is unable to finalize its conclusion.

U.S.NRC
UNITED STATES NUCLEAR REGULATORY COMMISSION
Protecting People and the Environment

USABWR STP COL – Review Topics of Interest

Section 8.4S – Station Blackout

- **Section 8.4S** Addresses staff review of STP Units 3 and 4 conformance to the requirements of 10 CFR 50.63, and the guidelines of RG 1.155.

- **Specific items of interest:**
  - Cope SBO with AAC Power Source. In addition the ABWR is designed with an 8-hour battery to accommodate SBO without AC power
  - CTG size increased from 9 MW at 6.9 KV to at least 20 MW at 13.8 kV.
  - CTG start time increased from 2 minutes to less than10 minutes
  - One Open Item identified in current SER
    - Applicant provided additional information to close this Open Item.
  - COL Information Items are adequately addressed.
- **Section Conclusion**
  - As result of one Open Item, the staff is unable to finalize its conclusion.

U.S.NRC
UNITED STATES NUCLEAR REGULATORY COMMISSION
Protecting People and the Environment

USABWR STP COL – Staff Findings

- The STP COL FSAR provides:
  - Sufficient information about offsite power system, switchyard, interconnection entities to maintain grid reliability and stability and minimize a loss of offsite power.
  - Sufficient details about site-specific safety-related load increase to EDG so that maximum expected loads do not exceed 95 percent of the continuous rating of EDG.
  - Each medium voltage safety-related bus can be connected to normal offsite power source thru UAT, alternate offsite power source thru RAT A or RAT B, onsite power source thru EDG, and AAC power source thru CTG.
  - Two of three divisions are normally fed from an offsite normal preferred power source. The remaining division is normally fed from alternate preferred power source.
  - Regarding SBO, each STP unit has an AAC power source (CTG) with 7 days fuel capacity. Additionally, the ABWR is designed with an 8-hour battery to accommodate SBO without AC power.
  - SER with O/I identified 8 Open Items. Staff subsequently closed 7 Open Items and working with the applicant to close the remaining Open item.

Summary

- Staff is unable to finalize its conclusions at this time.

U.S.NRC
UNITED STATES NUCLEAR REGULATORY COMMISSION
Protecting People and the Environment

Questions and Answers

- Questions
- Follow-up actions

STP Chapter 8 Open Items

- **OI 8.1-1** Electromagnetic and Radiofrequency Interference
  - Closed since the SER was written
- **OI 8.2-1** Switchyard battery discharge, relay, circuit breaker timing, transformer testing
  - Closed since the SER was written
- **OI 8.2-2** Transmission Line Failure Events
  - Closed since the SER was written
- **OI 8.2-3** Inaccessible/Underground cable testing program
  - Open

STP Chapter 8 Open Items (cont'd)

- **OI 8.2-4** Communication protocol between STP and TSP regarding risk-sensitive maintenance
  - Closed since the SER was written

- **OI 8.3.1-1** Diesel room temperature increase
  - Open

- **OI 8.3.1-2** Inclusion of Isolation devices in I&C circuits into the periodic testing program
  - Closed since the SER was written

- **OI 8.4-1** Severe weather procedures
  - Closed since the SER was written

South Texas Project Units 3 & 4
Presentation to ACRS Subcommittee
Chapter 16
Technical Specifications

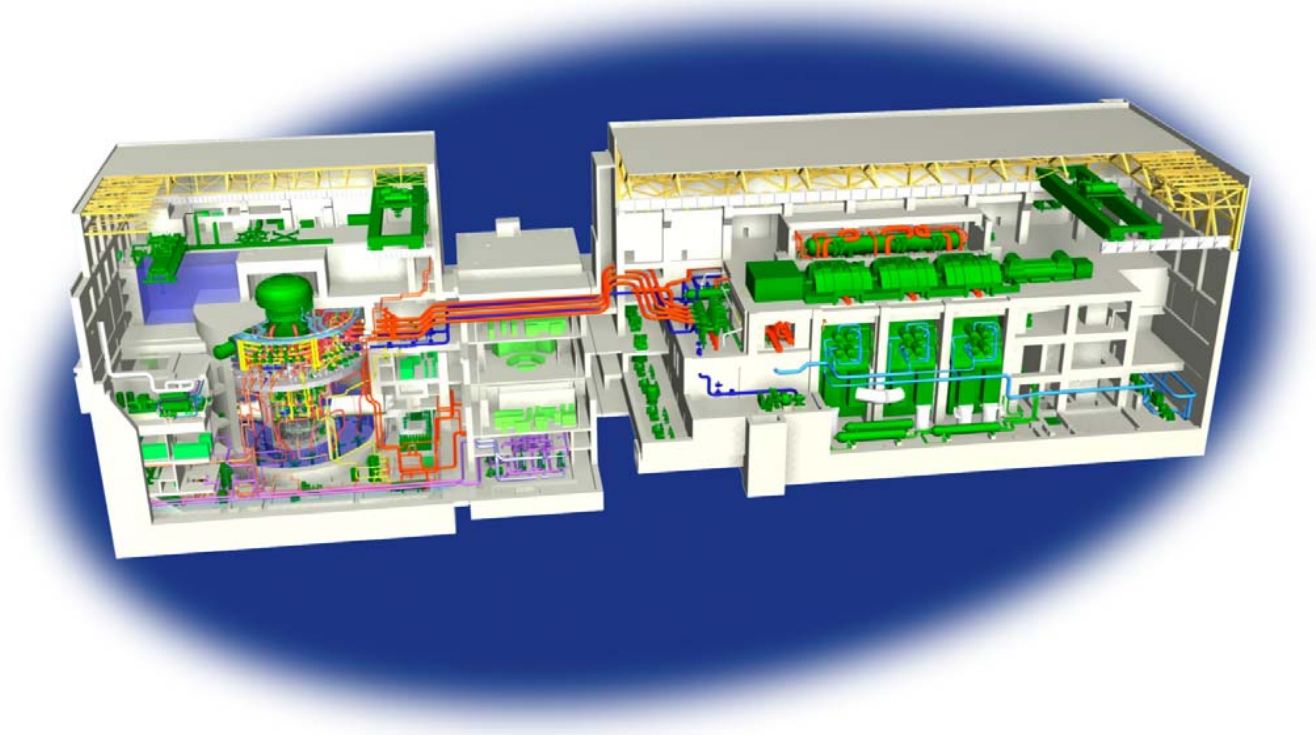

Agenda

- Introduction
- Contents
  - Departure Information
  - Site-Specific Supplements
  - COL License Information Items
- Future Plans
- Conclusion

Attendees

Scott Head	Regulatory Affairs Manager, STP 3&4
Tom Daley	Engineering Supervisor, STP 3&4
Steve Cashell	Licensing, STP 3&4
Kyle Dittman	Engineering I&C Supervisor, STP 3&4

Chapter 16 Introduction

- The ABWR Technical Specifications were developed using NUREG-1434, “Standard Technical Specifications General Electric Plants, BWR/6,” Revision 0 for all but the containment specifications which follow NUREG-1433, “Standard Technical Specifications General Electric Plants, BWR/4,” Revision 0, to the extent practicable.

- The ABWR Technical Specifications and Bases are written in the Improved Standard Technical Specification format.

Chapter 16 Contents

- Use and Application
- Safety Limits and Limiting Safety System Settings
- Limiting Conditions for Operation
- Surveillance Requirements
- Design Features
- Administrative Controls

Departures

All TS and TS Bases Departures require NRC approval

- **6** Tier 1 departures affect TS
  - STD DEPs T1-2.3-1, 2.4-2, 2.4-3, 2.12-2, 2.14-1 and 3.4-1
- **9** Tier 2 design related departures affect TS
  - STD DEPs T2 6.2-2, 7.3-12, 7.3-17, 7.5-1, 7.7-10, 7.7-18, 8.3-1, 8.3-3 and 10.4-5
- **8** Tier 2 non-design related departures (non-editorial)
  - STD DEPs 16.2-1, 16.3-78 and 16.5-1 through 16.5-6

The remainder supplement, correct or clarify information in the TS and Bases, provide consistency between the TS and Bases, or are editorial in nature

Tier 1 Departures

- MSIV Closure and Scram on High Rad (T1 2.3-1)
  - Removes high radiation scram and isolation functions from TS
- Feedwater Line Break Mitigation (T1 2.4-2)
  - Adds new feedwater line break mitigation functions to TS
- RCIC Turbine / Pump (T1 2.4-3)
  - Revises the function name
- I&C Power Divisions (T1 2.12-2)
  - Adds new Division IV 120 v distribution panels
- Hydrogen Recombiner Elimination (STD DEP T1 2.14-1)
  - Removes hydrogen recombiner and hydrogen/oxygen monitor functions from TS
- Safety Related I&C Architecture (STD DEP T1 3.4-1)
  - Revises I&C nomenclature and design descriptions

Tier 2 Design-related Departures

- Containment Analysis (6.2-2)
  - Revises calculated peak containment pressure (Pa)
- Leak Detection & Sump Monitoring (7.3-12)
  - Revises RCS total and unidentified leakage limits
- ADS Electrical Interface (7.3-17)
  - Revises design description – 3 Divisions of control logic vs. 4
- Post Accident Monitoring (7.5-1)
  - Revises list of RG 1.97, Type A and Category 1 instruments
  - Specifies Wetwell Pressure and adds Wetwell Atmos. temperature
- Control Rod Drive Interfaces (7.7-10)
  - Adds alternate method to ensure full rod insertion

Tier 2 Design-related Departures

- RCIS Operator Information (7.7-18)
  - Revises design description – test switch is now a push button
- Plant Medium Voltage System Design (8.3-1)
  - Revises electrical system design information as discussed in Chapter 8
- Electrical Site Specific Power (8.3-3)
  - Revises MCC nomenclature and adds MCCs
- Condensate & Feedwater System (10.4-5)
  - Revises design description – 4 ASDs for 4 feedwater pumps

Tier 2 Non design-related Departures

- Safety Limit Violation (16.2-1)
  - Eliminates notification requirements per 10 CFR 50.36, 50.72 and 50.73
- Post Accident Monitoring Instrumentation (16.3-78)
  - Removes “Containment Water Level” parameter as non-Type A or Category 1
- Unit Responsibility (16.5-1)
  - Eliminates control room SRO requirements in MODE 4 (Cold Shutdown) 10 CFR 50.54(m)(2)(iii)
- Unit Staff (16.5-2)
  - Provides actual plant staff titles

Tier 2 Non-design related Departures

- TS Bases Control Program (16.5-3)
  - Eliminates term “unreviewed safety question” per 10 CFR 50.59
- Reporting Requirements (16.5-4)
  - Revises annual reporting requirements per 10 CFR 20.2206
- Working Hours (16.5-5)
  - Removes working hour limits from TS per 10 CFR 26
- Inservice Testing Program (16.5-6)
  - Revises program to reference the ASME OM Code

COL License Information Items

Only one, all encompassing COL Item:

16-1 Supply the bracketed information

All bracketed items were completed in accordance with one of the three available options identified in Interim Staff Guidance ISG-08, “Necessary Content of Plant-Specific Technical Specifications When a Combined License is Issued”

- Plant-specific information
  - Most items
- Bounding value
  - One item – Required # of LPRMs per division
- Reference to a program that uses an NRC-approved methodology
  - Allowable Values - Instrument Setpoint Methodology

Instrument Setpoint Methodology

- Adds new Specification 5.5.2.11, “Setpoint Control Program”
- Identifies methodology documents used to calculate setpoints
- Relocates Allowable Values from TS to a licensee-controlled document
- Revises Definitions and related SRs for:
  - FUNCTIONAL TESTS
  - CHANNEL CALIBRATIONS
- Establishes a document containing the required setpoint values

Site-Specific Supplements

- Bracketed information
- Ultimate Heat Sink (UHS) Surveillance Requirements
  - Cooling tower cell fans
  - UHS basin measurements

Chapter 16 - Future Plans

Tech Spec Upgrade – Post COL

- Incorporate approximately 100 applicable TSTFs, including risk-informed TSTFs, to fully conform with NUREG-1433 and 1434, Rev 3.1
- Risk Managed (RMTS), including RITSTF Initiative 4b (Completion Times), using NEI 06-09, “Risk-Managed Technical Specifications (RMTS) Guidelines” and TSTF-505 (if approved)
- Plant-specific PRA to support risk informed initiatives intended to be complete* prior to COL issuance
  - ASME PRA Standard, RG 1.200 and Peer Review

* Fire and seismic external events to be completed prior to fuel load

Chapter 16

Questions and Comments

United States Nuclear Regulatory Commission

Protecting People and the Environment

Presentation to the ACRS Subcommittee

South Texas Project Units 3 and 4 COL Application Review

SER/OI Chapter 16
"Technical Specifications"

March 18, 2010

STP COL Chapter 16 Staff Review Team

- **Project Managers**
  - George Wunder, Lead PM, DNRL/NGE2
  - Michael Eudy, Chapter PM, DNRL/NGE2

- **Technical Staff Presenters**
  - Craig Harbuck, Reviewer, CTSB
  - Dinesh Taneja, Reviewer ICE2
  - George Thomas, Reviewer, SRSB
  - Steve Downey, Reviewer, CIB2

Overview of Chapter 16 Review Topics of Interest

Topics of Interest	Summary
Staff Review Focus	Overview of verification process for plant-specific technical specifications (TS) • Generic TS • Departures • Site-specific TS COL information
COL License Information Item 16.1	Overview of resolution options for site-specific TS COL information using DC/COL-ISG-8
Open Item 16-1	Completion of site-specific TS COL information • Site-specific Limiting Safety System Settings • Site-specific RCS Pressure-Temperature Limits

U.S.NRC
UNITED STATES NUCLEAR REGULATORY COMMISSION
Protecting People and the Environment

Chapter 16 Review Focus

1. Verify that plant-specific technical specifications (PTS) and bases incorporate by reference (IBR) the ABWR generic technical specifications (GTS) and bases

2. Verify that departures from GTS and bases are warranted and justified

3. Verify that PTS and bases incorporate acceptable site-specific COL information to complete COL License Information Item 16.1

   - DC/COL-ISG-8, "Necessary Content of Plant-Specific Technical Specifications When a Combined License Is Issued."

Open Item 16-1

Completion of COL Information Item 16.1

- DC/COL-ISG-8 describes resolution of COL site-specific TS information using three options:
  1. Provide site-specific values or information;
  2. Provide useable bounding values or information; or
  3. Move the values or information to a licensee-controlled document and establish an administrative-control TS that requires determining the information using an NRC-approved methodology.
- Site-specific Limiting Safety System Settings (LSSS) (RAI 16-65 Issues 1 and 4.f)
- Site-specific RCS Pressure-Temperature (P-T) Limits (RAI 16-65 Issue 1, RAI 16-21 Issue 14, and RAI 5.3.2-1)

Open Item 16-1 *(continued)*
Site-specific LSSS

- STD DEP 16.3-100 implements “Option 3” to complete the LSSS (“allowable values”) for instrumentation trip or actuation settings.

- Setpoint Control Program specification (PTS 5.5.2.11) references plant-specific methodology

  Setpoint methodology is based on previously approved Westinghouse setpoint methodology for AP1000

  Consistent with SCP specification developed for ESBWR GTS

- Completion of staff review of this departure is pending acceptance of instrumentation setpoint methodology for STP Units 3 and 4. (SER Section 7.1.5)

Open Item 16-1 *(continued)*

Site-specific RCS P-T Limits

- STD DEP 16.3-8 deletes references to the P-T limit methodology in the bases for PTS 3.4.9 and implements “Option 1” to complete COL information in PTS 5.7.1.6 – by adding references to the P-T limit methodology and the NRC approval letter. (RAI 16-65 Issue 1)
- Removes brackets from RCS temperature values in GTS SR 3.4.9.4 and SR 3.4.9.5, and associated bases, for verifying reactor vessel flange and head flange temperatures are above limits in PTLR during cold shutdown. More frequent monitoring is specified below these values. (RAI 16-21 Issue 14)
- Completion of staff review of this departure and COL information is pending acceptance of the RCS P-T Limits Report (PTLR) for STP Units 3 and 4. (SER Section 5.3.2) (RAI 5.3.2-1, Open Item 5.3.2-1)

Open Item 16-1 *(continued)*

Site-specific RCS P-T Limits

	SURVEILLANCE	FREQUENCY
SR 3.4.9.4	----------NOTE---------- Not required to be performed until 30 minutes after RCS temperature ≤ [27°C] in MODE 4. ---------- Verify reactor vessel flange and head flange temperatures are within the limits specified in the PTLR.	30 minutes
SR 3.4.9.4	----------NOTE---------- Not required to be performed until 12 hours after RCS temperature ≤ [38°C] in MODE 4. ---------- Verify reactor vessel flange and head flange temperatures are within the limits specified in the PTLR.	12 hours

Chapter 16 Review Wrap Up

Chapter 16 staff reviewers have no outstanding technical issues related to PTS and bases. However, due to open items in other chapters involving information necessary for resolving Open Item 16-1 (STD DEPs 16.3-100 and 16.3-8), the staff is unable to finalize conclusions relating to Chapter 16 “Technical Specifications” at this time.

Overview of STP RCOL Chapter 16 – "Technical Specifications"

Discussion/Committee Questions

STP Chapter 16 Open Item Status: 3/18/10

OPEN ITEM	TITLE	DESCRIPTION /RESOLUTION
16-1 a	Instrument setpoint methodology	Tied to acceptance review in SER section 7.1.5 which is pending
16-1 b	RCS P-T Limits	Tied to acceptance review in SER section 5.3.2 which is pending

South Texas Project Units 3 & 4
Presentation to ACRS Subcommittee
Chapter 17
Quality Assurance

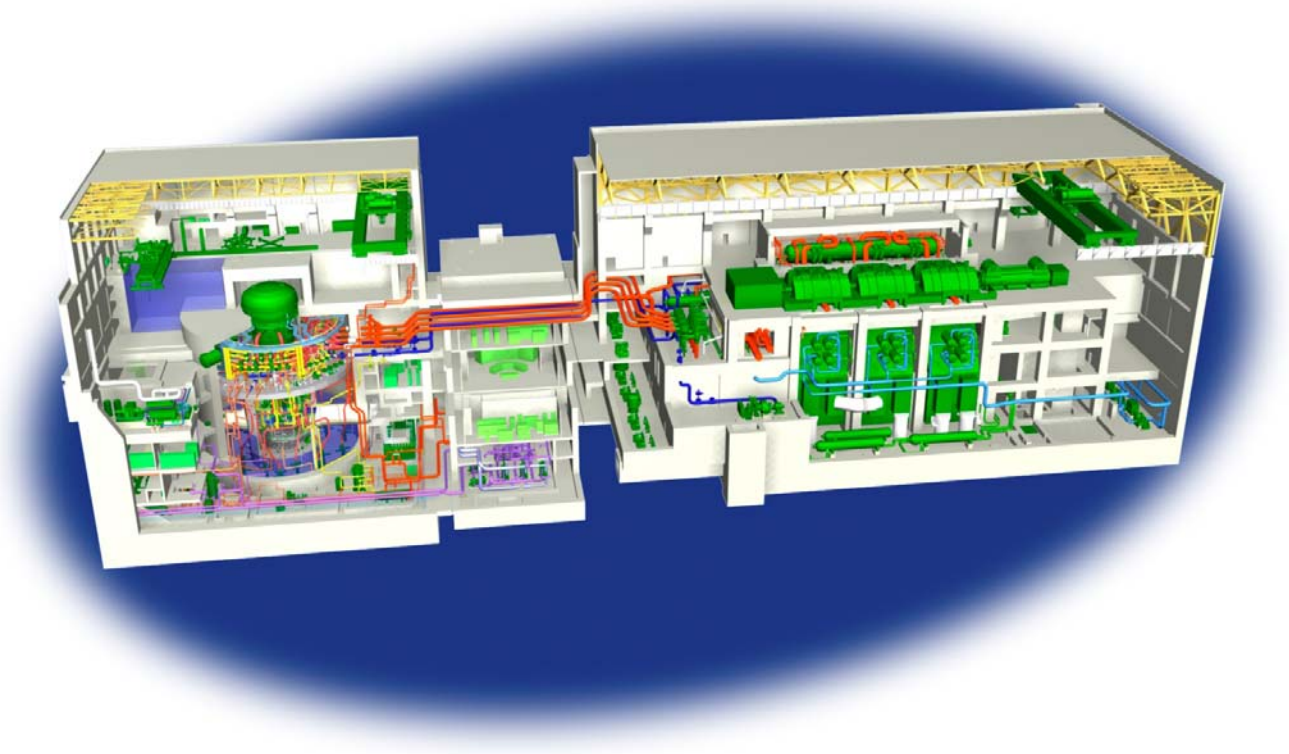

Agenda

- Introduction
- Contents of FSAR Chapter 17
  - Departure Information
  - COL License Information Items
  - Site-Specific Supplements
- ITAAC
- Conclusion

Attendees

Scott Head	Regulatory Affairs Manager, STP 3&4
Tim Walker	Quality Manager, STP 3&4
Bill Stillwell	PRA Supervisor, STP 3&4
Evans Heacock	Design Engineering Lead, STP 3&4
Jim Agles	Licensing, STP 3&4

Chapter Contents/Summary

- **17.0 Introduction**:
  Incorporated by reference with a supplement pointing to Section 17.5S for the information required by COL Information item 17.1 concerning the STP 3&4 Quality Assurance Program Description (QAPD).
- **17.1 Quality Assurance During Design and Construction**:
  Incorporated by reference with a supplement pointing to Section 17.5S for a description of the STP 3&4 QAPD.
- **17.2 Quality Assurance During Operations Phase**:
  Incorporated by reference with a supplement pointing to Section 17.5S for a description of the STP 3&4 QAPD.
- **17.3 Reliability Assurance Program During Design Phase**:
  Incorporated by reference with supplements to point to Section 17.4S and 17.6S for the information required by COL Information Items 17.2, 17.3, and 17.4 related to the STP 3&4 Design Reliability Assurance Program (DRAP).

Chapter Contents/Summary (cont)

- 17.4S **Reliability Assurance Program**

  Provides a DRAP program based on Standard Review Plan (SRP) Section 17.4.

- 17.5S **Quality Assurance Program Guidance**

  References a separate document titled “STP 3 & 4 Quality Assurance Program Description,” based on the industry template, Nuclear Energy Institute (NEI) 06-14A “Quality Assurance Program Description (QAPD).”

- 17.6S **Maintenance Rule Program**

  Incorporates by reference NEI 07-02, "Generic FSAR Template Guidance for Maintenance Rule Program Description for Plants Licensed Under 10 CFR Part 52."

Departures

There are no departures in Chapter 17.

Quality Oversight Activities

- Qualified Toshiba facilities by full scope audits
- Obtained first ASME Owner's Certificate in 20 years
- Reactor Pressure Vessel Fabrication
  - JSW, IHI, JFE, Yakin, Toshiba NEEMD
- STPNOC large component fabrication oversight
  - STP 1&2 Quality Oversight experience includes Replacement Steam Generators, LP Rotors, Generator Rotors, Standby Diesel Generator repair, Replacement Reactor Vessel Head

17.4S Reliability Assurance Program

- Undertaken for the life of the plant to ensure the reliability assumed by the probabilistic risk assessment (PRA) for risk significant systems, structures and components (SSC) is actually achieved in practice.
- Defines the criteria for PRA and deterministic identification of risk significant SSCs.
- Establishes the DRAP organization/qualifications including membership of an Expert Panel to implement the program.
- Establishes the interface with the Maintenance Rule Program (17.6S) to maintain plant reliability during plant operations.
- Program has been implemented and expert panel members identified.

17.5S QA Program Guidance

- Maintained as a separate document titled “STP 3 & 4 Quality Assurance Program Description.”
- STP 3&4 QAPD is based on American Society of Mechanical Engineers (ASME) NQA-1-1994, “Quality Assurance Program Requirements for Nuclear Facilities.”
- Nuclear Energy Institute (NEI) prepared an industry template, NEI 06-14A “Quality Assurance Program Description (QAPD),” for an ASME NQA-1-1994 based program.
- STP 3&4 QAPD is based on NEI 06-14A with site specific [bracketed] information provided.

17.6S Maintenance Rule

- Nuclear Energy Institute Report No. NEI 07-02, "Generic FSAR Template Guidance for Maintenance Rule Program Description for Plants Licensed Under 10 CFR Part 52" provides the Maintenance Rule Program for STP 3 & 4.

- NEI 07-02 is incorporated by reference with site-specific supplements added where called for.

COL Information Items

17.1 **QA Programs For Construction and Operation:** The information requested is provided by a separate QAPD as referenced by Section 17.5S. The QAPD is based on the industry template, Nuclear Energy Institute (NEI) 06-14A "Quality Assurance Program Description (QAPD)."

17.2 **Policy and Implementation Procedures for D-RAP**: Information provided as described in 17.4S.10 including the QAPD and the DRAP program described in Section 17.4S.

17.3 **D-RAP Organization:** Information provided as described in 17.4S.10. The Organizational elements associated with DRAP and RAP during the Operations phase is provided in 17.4S.1.1.

17.4 **Provision for O-RAP**: Information provided as described in 17.4S.10. The provisions for Reliability Assurance during Operations are described in Section 17.4S Reliability Assurance Program and 17.6S Maintenance Rule.

ITAAC

Tier 1 ITAAC Table 3.6 Design Reliability Assurance Program

- **Inspections of the Reliability Assurance Program will be conducted to verify:**
  - Scope, Purpose, and Objectives
  - Process used to evaluate and prioritize SSCs
  - List of Risk Significant SSCs
  - Process for determining dominant failure modes (Risk significant SSCs)
  - Key assumptions and insights considered
- **Site specific ITAAC are not provided.**

Chapter 17 Quality Assurance

Questions and Comments

U.S.NRC

United States Nuclear Regulatory Commission

Protecting People and the Environment

Presentation to the ACRS Subcommittee

South Texas Units 3 and 4 COL Application Review

SER/OI Chapter 17
"Quality Assurance"

March 18, 2010

U.S.NRC
United States Nuclear Regulatory Commission
Protecting People and the Environment

STP COL Chapter 17 Staff Review Team

- **Project Managers**
  - George Wunder, Lead PM, DNRL/NGE2
  - Raj Anand, Chapter PM, DNRL/NGE2
- **Technical Staff Presenters**
  - Garrett Newman, DCIP/CQVB
  - Todd Hilsmeier, DSRA/SPRA

U.S.NRC
United States Nuclear Regulatory Commission
Protecting People and the Environment

Summary of Technical Discussion for South Texas COL Chapter 17

FSAR Section		Summary of Supplemental Information
17.0	Introduction	• This section incorporates by reference Section 17.0 of the ABWR DCD • This section addresses COL License Information Item: - 17.1 QA Programs for Construction and Operation
17.1	Quality Assurance during Design and Construction	• This section incorporates by reference Section 17.1 of the ABWR DCD
17.2	Quality Assurance during Operation Phase	• This section incorporates by reference Section 17.2 of the ABWR DCD
17.5S	Quality Assurance Program Guidance	• Referenced STP 3 and 4 QA Program is based on NEI 06-14
17.3	Reliability Assurance Program During Design Phase	• This section incorporates by reference Section 17.3 of the ABWR DCD • Provides supplemental information stating that COL License Information Items 17.2, 17.3, and 17.4 are addressed in FSAR Section 17.4S
17.4S	Reliability Assurance Program	• This section addresses COL License Information Items: - 17.2 Policy and Implementation Procedures for D-RAP - 17.3 D-RAP Organization - 17.4 Provision for Operation RAP
17.6S	Maintenance Rule Program	• This section incorporates by reference NEI 07-02, “Generic FSAR Template Guidance for Maintenance Rule Program Description for Plants Licensed Under 10 CFR Part 52”

Sections 17.0, 17.1, and 17.2

- FSAR Sections 17.0, 17.1 and 17.2 incorporate by reference Chapters 17.0, 17.1, and 17.2 of the ABWR DCD and provide reference to Section 17.5S of the FSAR to address the following COL Information Item:
  - 17.1 QA Programs For Construction and Operation
- STPNOC committed to incorporate by reference the OQAP into FSAR Section 17.1 (Confirmatory Item 01-9 - Result of January 2009 QA Implementation Inspection)
- The staff's review confirmed that the applicant has addressed the relevant information, and with exception to Confirmatory Item 01-9, no outstanding information is expected to be addressed in the COL FSAR related to these sections

Section 17.5S - Quality Assurance Program Guidance

- Section 17.5S provides reference to “STP 3 & 4 Quality Assurance Program Description” submitted to the NRC as a separate document
- STPNOC submitted “STP 3 & 4 Quality Assurance Program Description,” Revision 2, on September 30, 2009
- Based on NEI 06-14, Rev. 7 – Approved December 2009
  - RAI issued to STP to address applicant-specific issues

Section 17.5S - Quality Assurance Program Guidance

RAI / Open Item 17.5-9

- STPNOC QAPD, Part IV, Regulatory Commitments mirrors NEI 06-14, Revision 7, but does not address applicant-specific items in the NRC SER, dated, Nov. 3, 2009.
- Staff requested clarification how quality assurance-related regulatory and industry guidance are met in Part IV of the QAPD.
  - RG 1.28 records and retention times
  - RG 1.33 proposed alternative acceptability
  - Consistency between this section and FSAR Table 1.9S
  - NQA-1-1994 commitment clarification

U.S.NRC
United States Nuclear Regulatory Commission
Protecting People and the Environment

Section 17.4S – Reliability Assurance Program

- FSAR Section 17.4S addresses COL License Information Items 17.2, 17.3, and 17.4 through the discussion of the following:

  - Essential Elements of D-RAP

  - Methodology for Identifying Risk-Significant SSCs

  - Integration of RAP into Operational Programs

U.S.NRC
United States Nuclear Regulatory Commission
Protecting People and the Environment

Section 17.4S – Reliability Assurance Program

Essential Elements of D-RAP

- Applicant describes in FSAR Section 17.4S the essential elements of the site-specific D-RAP. The essential elements of D-RAP include organizational interfaces, design control, procedure controls, record controls, corrective action process, and audit plans
- Applicant plans to proceduralize and implement these essential elements by March 2010
- Staff will conduct an audit to verify this D-RAP activity (Confirmatory Item 17.04-8)

Section 17.4S – Reliability Assurance Program

Methodology for Identifying Risk-Significant (RS) SSCs

- The initial identification of site-specific RS SSCs in preparation of the COL application is provided in FSAR Appendix 19K and will be discussed during the Chapter 19 presentation to ACRS

- Applicant's methodology for identifying site-specific RS SSCs prior to entering the detailed design, procurement, fabrication, and construction phase:
  - PRA (FV $\geq$ 0.005, RAW $\geq$ 2.0)
  - Establish and utilize an expert panel to augment PRA techniques in the risk ranking of SSCs using deterministic techniques and operating experience

- Applicant plans to implement this methodology and update the list of site-specific RS SSCs in 2010

- Staff will conduct an audit to verify this D-RAP activity (Confirmatory Item 17.04-7)

U.S.NRC
United States Nuclear Regulatory Commission
Protecting People and the Environment

Section 17.4S – Reliability Assurance Program

Integration of RAP into Operational Programs

- Applicant proposes a process in FSAR Section 17.4S for meeting the objectives of the RAP during plant operation by integrating the RAP into the maintenance rule, quality assurance, surveillance testing, inservice inspection, inservice testing, and maintenance programs

- Staff concludes that this proposed process meets the guidance in Item E of SECY-95-132 and SRP Section 17.4 and is acceptable

U.S.NRC
United States Nuclear Regulatory Commission
Protecting People and the Environment

Section 17.6S – Maintenance Rule Program

- FSAR Section 17.6S incorporates by reference NEI 07-02, "Generic FSAR Template Guidance for Maintenance Rule Program Description for Plants Licensed Under 10 CFR Part 52"
- Applicant will revise FSAR Section 17.6S to adopt the NEI 07-02A guidance (Confirmatory Item 17.06-2)
- Staff is unable to finalize conclusions for FSAR Section 17.6S as a result of the identified confirmatory item

Chapter 17 Open items

Open Items	Current status of Open Items
17.5-9 Requested clarification of how quality-related regulatory and industry guidance are met in Part IV of the QAPD.	The applicant has not responded yet. NEI 06-14, Rev. 8 is expected to address the generic issues.
17.04-9 (Identify the SSCs associated with risk-significant common cause failures of the HPCF, RHR, RBCW, and RSW systems) **17.04-10** (Clarify the risk significance of the CWS pump circuit breakers)	These open items are related to the list of risk-significant SSCs in FSAR Appendix 19K and will be discussed as part of the Chapter 19 presentation to ACRS
17.04-11 (Integrate the “medium” risk category into the “high” risk category in FSAR Section 17.4S.1.4)	Has since been closed and is now confirmatory

Chapter 17 Open items

Open Items	Current status of Open Items
17.5-9 Requested clarification of how quality-related regulatory and industry guidance are met in Part IV of the QAPD.	The applicant has not responded yet. NEI 06-14, Rev. 8 is expected to address the generic issues.
17.04-9 (Identify the SSCs associated with risk-significant common cause failures of the HPCF, RHR, RBCW, and RSW systems) **17.04-10** (Clarify the risk significance of the CWS pump circuit breakers)	These open items are related to the list of risk-significant SSCs in FSAR Appendix 19K and will be discussed as part of the Chapter 19 presentation to ACRS
17.04-11 (Integrate the “medium” risk category into the “high” risk category in FSAR Section 17.4S.1.4)	Has since been closed and is now confirmatory

Backup Slides
Reliability Assurance Program (RAP)

- Purpose of RAP is to ensure:
  - The reactor is designed, constructed, and operated consistent with the risk insights and key assumptions
  - The RAP SSCs do not degrade to an unacceptable level of reliability, availability, or condition during plant operations
  - The frequency of transients that challenge these SSCs is minimized
  - These SSCs will function reliably when challenged

- RAP is implemented in two stages:
  - Design-reliability assurance program (D-RAP) prior to fuel load
  - Use of operational programs to meet the objectives of RAP during operations phase

Backup Slides
Design Reliability Assurance Program

- D-RAP implementation includes:

  - Establishing and applying the essential elements of D-RAP.

    These are controls/processes that ensure the risk insights and key assumptions are consistent with the designed and constructed plant, and that the list of RAP SSCs is appropriately developed, maintained, and communicated to the appropriate organizations

  - Subjecting the non-safety-related RS SSCs to QA controls (Part V, "Nonsafety Related SSC Quality Controls," of SRP Section 17.5)

Backup Slides
Design Reliability Assurance Program

- DC Applicant's Responsibilities:
  - Describe the details of the D-RAP (e.g., scope, purpose, objectives, framework, and phases of D-RAP)
  - Establish and apply the essential elements of D-RAP during DC design activities
  - Determine the RAP SSCs (within the scope of the DC) using a combination of probabilistic, deterministic, and other methods of analysis
  - For the non-safety-related RAP SSCs, implement QA controls during DC design activities
  - Propose an D-RAP ITAAC

- COL Applicant's Responsibilities:
  - Establish and apply the essential elements of D-RAP during COL design activities
  - Determine the RAP SSCs in the COL's D-RAP by introducing plant-specific information
  - For the non-safety-related RAP SSCs, implement QA controls during COL design activities
  - Propose a process for integrating RAP into operational programs

- COL Holder's Responsibilities:
  - Apply the essential elements of D-RAP during COL design and construction activities (which includes updating the list of RAP SSCs as changes are made to the plant-specific design and PRA)
  - For the non-safety-related RAP SSCs, implement QA controls during design and construction activities
  - Complete the D-RAP ITAAC
  - Integrates RAP into operational programs (e.g., maintenance rule, quality assurance, surveillance testing, inservice inspection, inservice testing, and maintenance programs)