babcock & wilcox nuclear energy
800 main street lynchburg, va 24504 phone 434.522.6800
fax 434.522.6793 www.babcock.com

PROJ 776

April 29, 2010

BW-JAH- 2010-214

U.S. Nuclear Regulatory Commission
ATTN: Document Control Desk
One White Flint North
11555 Rockville Pike
Rockville, MD 20852-2738

Subject: Submittal of Redacted Version of Technical Report 06-00000334-000, "B&W *mPower*™ CHF Test and Correlation Development Plan"

On April 29, 2010, Babcock & Wilcox Nuclear Energy (B&W NE) submitted Technical Report 06-00000334-000, "B&W *mPower*™ CHF Test and Correlation Development Plan" which contained B&W NE Commercial Confidential Information that was requested to be withheld from public disclosure. B&W NE committed to provide a non-proprietary version in a separate transmittal.

Accordingly, enclosed is a redacted non-proprietary version of Technical Report 06-00000334-000, "B&W *mPower*™ CHF Test and Correlation Development Plan.

Questions concerning this submittal may be directed to T. J. Kim at 434-382-9791 (email: tjkim@babcock.com) or to J. A. Halfinger at 434-316-7507 (email: jahalfinger@babcock.com).

Jeffrey A. Halfinger
Modular Reactor Program Director
B&W NE

JAH/

cc: Joelle L. Starefos, NRC, TWFN-6 E4
Stewart L. Magruder, Jr., NRC, TWFN-6 E4

4B01
NRO

Add: Joelle Starefos, S. Magruder to ERIDS

Redacted Version

B&W *mPower*™

CHF Test and Correlation Development Plan

Technical Report

Note: Proprietary or Commercial Confidential Information (CCI) is enclosed in square brackets. Reasons for the identified CCI to be withheld are provided in an accompanying Affidavit.

©2010 Babcock & Wilcox Nuclear Energy, Inc. All rights reserved.

DOCUMENT #: 06-00000334	REVISION: 000

TITLE: B&W *mPower*™ CHF Test and Correlation Development Plan

SIGNATURES

Prepared By:	Steven K. Clark	SKClark	4-27-10
	Printed Name	Signature	Date
Prepared By:	Gary W. Neeley	Gary W. Neeley	4/27/10
	Printed Name	Signature	Date
Prepared By:	Stephen W. Scoles	Stephen W. Scoles	4/27/10
	Printed Name	Signature	Date
Reviewed By:	Billy E. Bingham	Billy E. Bingham	4/27/10
	Printed Name	Signature	Date
Reviewed By:	Michael T. Childerson	MTChilderson	4/27/2010
	Printed Name	Signature	Date
Approved By:	Doug E. Lee	[illegible]	4/27/2010
	Printed Name	Signature	Date

© 2010 BABCOCK & WILCOX NUCLEAR ENERGY, INC. ALL RIGHTS RESERVED. THIS DOCUMENT IS THE PROPERTY OF BABCOCK & WILCOX NUCLEAR ENERGY, INC. AND CONTAINS CONFIDENTIAL AND PROPRIETARY INFORMATION OWNED BY BABCOCK & WILCOX NUCLEAR ENERGY, INC. ANY COPYING, USE, OR DISCLOSURE OF THIS DOCUMENT WITHOUT THE WRITTEN PERMISSION OF BABCOCK & WILCOX NUCLEAR ENERGY, INC. IS STRICTLY PROHIBITED. THIS MATERIAL IS PROTECTED UNDER TRADE SECRET AND UNFAIR COMPETITION LAWS AND THE EXPRESSION OF THE INFORMATION CONTAINED THEREIN IS PROTECTED UNDER FEDERAL COPYRIGHT LAWS.

REVISION HISTORY

Rev.	Description	Date
000	Initial issue	

©2010 Babcock & Wilcox Nuclear Energy, Inc. All rights reserved.

ABSTRACT

This report describes the plan for developing the Babcock & Wilcox Nuclear Energy, Inc. Critical Heat Flux (CHF) correlation for use in design and licensing activities for the B&W *mPower*™ reactor. The B&W *mPower* fuel design is a shorter version of a conventional 17x17 square lattice commercial pressurized water reactor fuel assembly with a grid design that does not have mixing vanes. The BWNE CHF correlation will be similar in form to other CHF correlations that have been reviewed by the U. S. Nuclear Regulatory Commission (NRC) and approved for use in pressurized water reactor designs. B&W plans to supplement publicly available CHF data with new data to create a CHF database [ ][CCI per Affidavit 4(a)-(d)] to enable creation of the new BWNE CHF correlation.

The correlation will be developed with the addition of new CHF test data obtained from a Stern Laboratories test facility in Hamilton, Ontario, Canada. The tests will be done using a 5x5 rod array for a simulated fuel assembly geometry (with no mixing vane grids), with and without guide tubes and varied fuel rod spacing, and will use non-uniform heat flux profiles and a single heated length. The combined database is expected to provide sufficient data to cover all new aspects associated with the B&W *mPower* fuel assembly design and operational parameters.

The functional form of the BWNE CHF correlation will be empirical and will be based solely on experimental observations of the relationship between the measured CHF data and the correlation variables. The correlation will include the following variables: pressure, local mass flux, local quality, axial heat flux profile and possibly a geometry term to account for grid spacing.

The BWNE CHF correlation coefficients will be derived from local conditions calculated with the B&W version of the VIPRE-01 reactor subchannel analysis code with global parameters provided from the CHF test data.

B&W will complete the testing and subsequent development of the new BWNE CHF correlation and will present the results in a topical report to the NRC.

©2010 Babcock & Wilcox Nuclear Energy, Inc. All rights reserved.

Table of Contents

1.0 Introduction 7
1.1 B&W *mPower* Fuel Design and Operating Conditions 8
1.2 Critical Heat Flux Database 10
1.3 [ ][CCI per Affidavit 4(a)-(d)] 13
1.4 Need for a New CHF Correlation 14
2.0 CHF Test Program and CHF Development 16
2.1 Description of the Test Facility 17
2.2 Description of the Planned Tests 20
2.3 Collection of Test Data 24
2.4 Local Condition Data Analysis Methodology 25
2.5 Development of the BWNE CHF Correlation 26
3.0 Summary 28
4.0 References 29

List of Tables:

Table 1.1-1: Fuel Rod Description
Table 1.1-2: [ ][CCI per Affidavit 4(a)-(d)]
Table 1.1-3: Guide Tube Description
Table 1.1-4: Fuel Assembly Configuration
Table 2.2-1: Proposed Test Conditions

List of Figures:

Figure 1.1-1: Typical B&W *mPower*™ Fuel Rod
Figure 1.1-2: Typical B&W *mPower*™ Guide Tube
Figure 1.1-3: B&W *mPower*™ Fuel Assembly Cross Section
Figure 1.1-4: Typical B&W *mPower*™ Fuel Assembly
Figure 1.1-5: Characteristics of a Typical B&W *mPower*™ Fuel Assembly

©2010 Babcock & Wilcox Nuclear Energy, Inc. All rights reserved.

Figure 1.2-1: Distribution of CHF Data by Sponsor

Figure 1.2-2: Distribution of CHF Data by Test Bundle Configuration

Figure 1.2-3: Distribution of CHF Data by Test Bundle Pitch/Rod OD and Rod Type

Figure 1.2-4: Distribution of CHF Data by Test Bundle Heated Length and Axial Heat Flux Profile Type

Figure 1.2-5: Inlet Subcooling and Mass Flux Range for CHF Data

Figure 1.2-6: Outlet Pressure and Mass Flux Range for CHF Data

Figure 2.1-1: Schematic of the Test Loop

Figure 2.1-2: Schematic of the Test Section

Figure 2.1-3: Axial Heat Flux Profiles

Figure 2.1-4: Locations of Thermocouples and Grids

Figure 2.2-1: Fuel Rod Lattice Configurations

©2010 Babcock & Wilcox Nuclear Energy, Inc. All rights reserved.

1.0 Introduction

B&W will develop a new CHF correlation, the BWNE CHF correlation, for analysis of the B&W *mPower* reactor and fuel design. The database for the new BWNE CHF correlation will include applicable data, which is available to the public from an EPRI database (Reference 1). The EPRI database contains data from sponsored testing (by B&W and others) at the Columbia University Heat Transfer Research Facility. The EPRI database will be supplemented with data to be obtained from the Stern Laboratories test facility as described in this report. [

][CCI per Affidavit 4(a)-(d)]

To validate the use of the new BWNE CHF correlation combined database, B&W will perform a verification of the CHF calculations using the VIPRE-01 subchannel analysis code and will perform a statistical analysis of both the EPRI CHF data and the new CHF data obtained from the Stern Laboratories test facility.

The purpose of this report is to describe the plan to obtain the new CHF data, to expand the existing CHF database to include the new CHF data, and to develop the new BWNE CHF correlation from the expanded database.

Plan Summary

- A Critical Heat Flux Test Specification was prepared by B&W in December 2009 and revised in March 2010.
- Stern Laboratories will perform the testing as described in the Critical Heat Flux Test Specification. Testing performed to the requirements of the specification is expected to produce sufficient high-quality data to develop a CHF correlation that covers the B&W *mPower* reactor operating envelope.
- B&W will use CHF test data as input to the VIPRE-01 subchannel analysis code to develop the local conditions necessary for developing the BWNE CHF correlation.
- B&W will complete the development of the BWNE CHF correlation and submit a topical report to the NRC.

©2010 Babcock & Wilcox Nuclear Energy, Inc. All rights reserved.

1.1 B&W *mPower* Fuel Design and Operating Conditions

[

©2010 Babcock & Wilcox Nuclear Energy, Inc. All rights reserved.

][CCI per Affidavit 4(a)-(d)]

©2010 Babcock & Wilcox Nuclear Energy, Inc. All rights reserved.

1.2 Critical Heat Flux Database

There is a significant database of public CHF data available from EPRI (Reference 1). These data were used to create the EPRI CHF correlation. The data were the result of testing at the Columbia University Heat Transfer Research Facility sponsored by numerous organizations. Relevant portions of these data will be combined with the new data from the Stern Laboratories test facility to create a database suitable for use in creation of a new CHF correlation applicable to the B&W *mPower* reactor configuration and operating conditions.

Relevant EPRI data include the following:

- Combustion Engineering data - Of the 4745 data points in the EPRI report (Reference 1) that resulted from CE sponsorship, [ ][CCI per Affidavit 4(a)-(d)] are potentially applicable to the B&W *mPower* reactor configuration and operating point. All of these data are from a 5x5 test configuration with two different combinations of pitch and rod OD.

- Westinghouse data - Of the 2485 data points in the EPRI report that resulted from Westinghouse sponsorship, [ ][CCI per Affidavit 4(a)-(d)] are potentially applicable to the B&W *mPower* reactor configuration and operating point. All of these data are from the same 4x4 test configuration. All of the data are for a non-uniform axial heat flux profile (top-peaked).

- Exxon Nuclear data – [ ][CCI per Affidavit 4(a)-(d)] in the EPRI report that resulted from Exxon Nuclear sponsorship are potentially applicable to the B&W *mPower* reactor configuration and operating point. All of these data are from a 5x5 test configuration with two different combinations of pitch and rod OD. For about a third of the data points the configuration includes four guide tubes. All of the data are for a uniform axial heat flux profile.

- Babcock & Wilcox data – [ ][CCI per Affidavit 4(a)-(d)] in the EPRI report that resulted from B&W sponsorship are potentially applicable to the B&W *mPower* reactor configuration and operating point. These data include results from three separate test configurations (3x3, 5x5, and 6x6), two different combinations of pitch and rod OD, and some configurations that include a single guide tube. All of the data are for a uniform axial heat flux profile.

- United Nuclear data - Of the 517 data points in the EPRI report that resulted from United Nuclear sponsorship, [ ][CCI per Affidavit 4(a)-(d)] are potentially applicable to the B&W *mPower* reactor configuration and operating point. These data are from a somewhat unique test configuration that consists of a 5x5 test configuration with the corners removed. About half of the data includes a guide tube in the center of the test configuration, two different heated lengths are tested, and both uniform and non-uniform (bottom-peaked) axial heat flux profiles are included.

- Idaho National Engineering Laboratory data - Of the 644 data points in the EPRI report that resulted from INL sponsorship (for the LOFT program), [ ][CCI per Affidavit 4(a)-(d)] are potentially applicable to the B&W *mPower* reactor configuration and operating

©2010 Babcock & Wilcox Nuclear Energy, Inc. All rights reserved.

point. All of these data are from a single 5x5 test configuration with three guide tubes and a uniform axial heat flux profile.

The total number of data points chosen from the EPRI database is [ ][CCI per Affidavit 4(a)-(d)]. Overall, these data include:

- six different sponsors,
- five different test matrix configurations (counting guide tube / no guide tube configurations),
- three basic combinations of pitch and rod diameter,
- five different heated lengths from 1.4 m to 2.4 m, and
- both uniform and non-uniform axial heat flux profiles.

By way of comparison, the proposed Stern Laboratories test program will produce approximately [ ][CCI per Affidavit 4(a)-(d)] from a 5x5 test configuration with [ ][CCI per Affidavit 4(a)-(d)] of the data from a configuration with a single guide tube in the middle. Three different non-uniform axial heat flux profiles [ ][CCI per Affidavit 4(a)-(d)] will be tested. Section 2.2, Description of the Planned Tests, provides more details about the planned testing.

[

][CCI per Affidavit 4(a)-(d)]

The proposed Stern Laboratories test range was developed to provide data closely focused around the B&W *mPower* reactor operating conditions. It was deemed important to obtain as much high-quality data as possible in the expected normal range of operating conditions.

The ranges of operating conditions for the CHF data described above are compared to the proposed Stern Laboratories test range in the following figures. Figures 1.2-5 and 1.2-6 show the range of operating conditions for the CHF test data described above along with the Stern Laboratories test range and the nominal operating point for the B&W *mPower* reactor. The proposed Stern Laboratories test range does not cover any completely unexplored areas, however the data is sparse in these areas. In particular, the lower operating pressure of the B&W *mPower* reactor dictates testing in a pressure range where there is little data.

The total BWNE CHF database (EPRI data plus Stern Laboratories data) will consist of nearly [ ][CCI per Affidavit 4(a)-(d)] The data will cover a wide enough range of conditions to cover the required range of applicability of the BWNE CHF correlation. Statistically speaking, there should be

©2010 Babcock & Wilcox Nuclear Energy, Inc. All rights reserved.

more than enough data to enable the determination of a reasonable limiting value for the BWNE CHF correlation that provides a 95% probability with 95% confidence of not experiencing CHF.

Section 2.5, Development of the BWNE CHF Correlation, describes the process to be used for determining which data to use and producing a CHF correlation to those data. It is an iterative process that uses statistical methods to simultaneously define a good data set and a good correlation.

©2010 Babcock & Wilcox Nuclear Energy, Inc. All rights reserved.

1.3 [ ][CCI per Affidavit 4(a)-(d)]

[

][CCI per Affidavit 4(a)-(d)]

©2010 Babcock & Wilcox Nuclear Energy, Inc. All rights reserved.

1.4 Need for a New CHF Correlation

A new CHF correlation is needed to clearly demonstrate and define a correlation that will have statistical validity for the B&W *mPower* design and operating conditions. The CHF phenomenon is not well enough understood to allow prediction of CHF based on first principles under the modified conditions of the B&W *mPower* reactor. In addition, the information provided in Section 1.3, [ ][CCI per Affidavit 4(a)-(d)], demonstrates the need for a new CHF correlation specifically designed to include the B&W *mPower* reactor operating conditions. The agreement between the [ ][CCI per Affidavit 4(a)-(d)] and the other correlations cited above is much better when a comparison is made in a range of operating conditions common to all of the correlations (Reference 1). The fact that there is a significant difference between the correlations at B&W *mPower* reactor operating conditions demonstrates the need for additional CHF data and a new CHF correlation designed to cover the operating conditions of the B&W *mPower* reactor.

The new BWNE CHF correlation database will include publicly available CHF test data covering a broad range of operating conditions and a significant amount of new CHF test data in the range of operating conditions expected for the B&W *mPower* reactor as shown below:

- Mass flux
  - Nominal B&W *mPower* operating point [ ] [CCI per Affidavit 4(a)-(d)]
  - Minimum database value [ ] [CCI per Affidavit 4(a)-(d)]
  - Maximum database value [ ] [CCI per Affidavit 4(a)-(d)]
- Outlet pressure
  - Nominal B&W *mPower* operating point [ ] [CCI per Affidavit 4(a)-(d)]
  - Minimum database value [ ] [CCI per Affidavit 4(a)-(d)]
  - Maximum database value [ ] [CCI per Affidavit 4(a)-(d)]
- Inlet subcooling
  - Nominal B&W *mPower* operating point [ ] [CCI per Affidavit 4(a)-(d)]
  - Minimum database value [ ] [CCI per Affidavit 4(a)-(d)]
  - Maximum database value [ ] [CCI per Affidavit 4(a)-(d)]

©2010 Babcock & Wilcox Nuclear Energy, Inc. All rights reserved.

The following sections of this report discuss the new CHF test data to be obtained from the Stern Laboratories test facility. The BWNE CHF correlation will be applicable for a range in temperature, flow, and pressure similar to the range of the data used to construct it.

©2010 Babcock & Wilcox Nuclear Energy, Inc. All rights reserved.

2.0 CHF Test Program and CHF Development

As a result of the geometry and operating conditions associated with the B&W *mPower* reactor design, a comprehensive CHF test program has been initiated. The CHF tests will be performed at the Stern Laboratories test facility which is located in Hamilton, Ontario, Canada. Stern Laboratories has extensive experience performing similar heat transfer experiments for CANDU reactors and for Boiling Water Reactors using resistance heated fuel simulators.

[

][CCI per Affidavit 4(a)-(d)]

The following sections describe the CHF test program for obtaining new CHF data, the process for using that data to develop the new BWNE CHF correlation, and the effect on CHF margins.

©2010 Babcock & Wilcox Nuclear Energy, Inc. All rights reserved.

2.1 Description of the Test Facility

Stern Laboratories will provide the test facilities to perform the thermal hydraulic experiments utilizing existing high pressure loop facilities, electrical power supplies, heat rejection devices such as cooling towers, a water purification system and a data acquisition system. The test section, including pressure housing and flow channel, and the fuel simulators will be designed and fabricated to represent the B&W *mPower* reactor fuel design.

The work at Stern Laboratories will be performed in accordance with their quality program, which meets the requirements of 10CFR50 Appendix B and 10CFR21. The services from Stern Laboratories are considered a safety-related procurement, and following a B&W QA audit, Stern Laboratories is on B&W's approved suppliers list as conditionally approved with resolution of open items in progress.

Test Loop

The hydraulic test loop, made from stainless steel and rated at 18.0 MPa (2611 psia) and 616 K (649 °F), is shown schematically in Figure 2.1-1. The primary loop provides high temperature and pressure water to the test section and consists of a high capacity main circulating pump, a preheater, a mixer, a pressurizer, heat exchangers, a condenser, a storage tank, a high pressure injection pump, control valves, venturi and orifice flow meters, and connecting piping.

The loop main circulating pump provides the flow to the test section as well as bypass flow to the heat exchangers and mixer. Cooled water from the heat exchangers is injected into the mixer at the outlet of the test section to condense steam and subcool the water before returning it to the circulating pump. There is an orifice and flow control valve for each heat exchanger to assist with controlling the temperature of the return water. The secondary cooling water for the heat exchangers and condenser is cooled using cooling tower units and pumps. The loop pressure is maintained by a pressurizer with nitrogen cover gas which is connected to the loop as a dead end so that minimal water containing dissolved nitrogen will enter the loop from the pressurizer. De-aerated, de-ionized water is supplied from the storage tank through the high pressure injection pump/accumulator to the pressurizer as needed to maintain the pressurizer level. A self bleeding regulator valve is used to control the nitrogen pressure. An electrical pre-heater is installed for initial loop warm-up and conditioning.

The feed water system uses a high capacity mixed bed de-ionizer to provide the makeup water to the storage tank and to continuously re-circulate the water in the storage tank to maintain the electrical conductivity as low as possible. The water in the storage tank is heated for de-aeration. There is a continuous small bleed of primary loop coolant through a chemical station equipped with appropriate instrumentation to monitor the dissolved oxygen content, electrical conductivity, and pH of the loop water. A chemical feed pump injects hydrazine into the circulating coolant as necessary to maintain the dissolved oxygen content as low as possible. The loop water is normally maintained with the dissolved oxygen content less than 5 ppb and the electrical conductivity less than 5 μS/cm.

A small bleed from the top of the mixer to the condenser is maintained to remove any trapped non-condensible vapor (including nitrogen) from the loop. There is continuous injection of de-ionized, de-aerated make-up water from the storage tank through the injection pump/ accumulator to the pump

©2010 Babcock & Wilcox Nuclear Energy, Inc. All rights reserved.

suction to maintain the loop water at low conductivity. The loop is equipped with a water filter system to remove particulate matter.

The experimental conditions are controlled by the loop operator in the control room using a control panel equipped with automatic and manual valve controllers. Feedback is provided from flow, pressure, differential pressure, temperature, and water chemistry instrumentation. The loop instrumentation signals are recorded by the data acquisition system along with test data. There is also provision for optional computer control of some of the loop control valves for performing test sequences during transient tests.

Flow rates are measured using calibrated venturi and orifice flow meters designed in accordance with ISO/ASME guidelines. Absolute and differential pressures are measured using Rosemount capacitive type transmitters. Temperatures are measured using Platinum Resistance Temperature Detectors and Type K thermocouples. There is redundant instrumentation for measuring the test section flow and inlet and outlet temperatures and pressures, and fuel simulator voltage and current for calculating power.

Test Section

The test section, shown schematically in Figure 2.1-2, is a double-ended design. The pressure housing is fabricated from 8 inch SS316 pipe and 2500 lb. flanges. The flow channel box is fabricated from four SS410 flat plates machined to close tolerances and welded together.

Pressure taps are installed along the flow channel corresponding to the heated length and just upstream and downstream of the heated length for pressure and differential pressure measurements. The pressure tap sense lines are routed through an instrumentation ring attached to the flow channel and contained between intermediate flanges on the pressure housing. The instrumentation ring prevents bypass flow in the annulus between the flow channel and pressure housing and results in the flow channel being subjected to external pressure on the upstream side and internal pressure on the downstream side. The channel inlet tee section is designed with re-entrant geometry to minimize flow maldistribution.

In the double-ended design, the fuel simulators are connected to the top end flange using fixed packing gland seals and the bottom end closure flange incorporates cooled o-ring seals to allow differential thermal expansion of the fuel simulators. Suitable power connectors and cables are provided to connect the fuel simulators to the power supply bus at the top and bottom of the test section. The test section is thermally insulated and supported by a steel structure at the top.

Power Supply

The DC power supply consists of eleven controlled rectifier units (five at 2.5 MW each, three at 1.0 MW each and five at 0.25 MW each) capable of delivering over 50,000 amperes at 300 volts for a total power of 15 MW. For this program, with resistance heated fuel simulators, several power supplies will be used as necessary to provide the required radial power distributions. The fuel simulators will be connected to the power supplies such that the electrical currents in half of the fuel simulators will be flowing in one direction and the currents in the other half will be in the reverse direction in order to

©2010 Babcock & Wilcox Nuclear Energy, Inc. All rights reserved.

minimize induced magnetic forces in the fuel simulators and hence reduce the rod deflection due to heating. The rectifiers are twelve pulse low ripple design and employ current feedback to provide stable control.

Each power supply is equipped with an accurate shunt and voltage isolator which is used by the data acquisition system to measure the voltage and current and hence calculate the power. Hall-effect current transducers are used to measure the individual currents to each fuel simulator. The voltages are measured using leads connected directly to the power bus at the test section via signal isolators which attenuate and filter the signals. The supplies are protected using state-of-the-art power circuit breakers and monitoring equipment which provide instantaneous step down by preselected amounts or power trips in response to computer or manually activated signals.

Fuel Simulators

[

][CCI per Affidavit 4(a)-(d)]

The relative power of each fuel simulator is controlled by connecting the fuel simulators to appropriate power supplies which are individually controlled. Poisoned fuel rods will be simulated by varying power applied to fuel simulators.

©2010 Babcock & Wilcox Nuclear Energy, Inc. All rights reserved.

2.2 Description of the Planned Tests

There are three sets of CHF test parameters that are combined in a prescribed way to cover the design space for the B&W *mPower* reactor:

- bundle configuration,
- axial heat flux profile, and
- operating conditions (flow, pressure, and temperature).

Many combinations of these parameters are possible. A limited subset of the possible combinations was chosen based on a technical prioritization of the options.

Bundle Configuration

[

][CCI per Affidavit 4(a)-(d)]

Early in the planning phase of the test program, a 7x7 bundle was considered. Stern has the capability to test a bundle this size. The 7x7 bundle has the advantage of greater isolation of the interior channels from wall effects than for a 5x5 bundle. Since most previous CHF testing has been performed on 5x5 and smaller bundles, the 5x5 bundle configuration was chosen to provide good overlap with previous data. Wall effects have been dealt with in the past by using heated walls, varying the spacing between the walls and the outer rods, and/or suppressing the power in the outer ring of rods. The Stern test rig will not have the capability for heated walls, but the other two methods will provide sufficient flexibility to deal with wall effects.

Axial Heat Flux Profile

Three different axial heat flux profiles have been defined for this testing program (see Figure 2.1-3):

- [
-
-][CCI per Affidavit 4(a)-(d)]

All three profiles have a peak to average heat flux of [ ][CCI per Affidavit 4(a)-(d)] Much of the previous data was obtained using uniform axial heat flux profiles because of the difficulty of manufacturing fuel simulators with specified non-uniform profiles. Since Stern has the capability to manufacture fuel simulators with almost any profile desired, there is no strong incentive to perform tests

©2010 Babcock & Wilcox Nuclear Energy, Inc. All rights reserved.

with a uniform profile. [
][CCI per Affidavit 4(a)-(d)]

Operating Conditions

The range of operating conditions to be tested has already been shown graphically in Figures 1.2-1 through 1.2-4. The nominal minimum and maximum values of mass flux, pressure, temperature, and inlet subcooling in the test matrix are as follows:

- Mass flux
  - Nominal B&W *mPower* operating point [ ] [CCI per Affidavit 4(a)-(d)]
  - Minimum test value [ ] [CCI per Affidavit 4(a)-(d)]
  - Maximum test value [ ] [CCI per Affidavit 4(a)-(d)]
- Outlet pressure
  - Nominal B&W *mPower* operating point [ ] [CCI per Affidavit 4(a)-(d)]
  - Minimum test value [ ] [CCI per Affidavit 4(a)-(d)]
  - Maximum test value [ ] [CCI per Affidavit 4(a)-(d)]
- Inlet temperature
  - Nominal B&W *mPower* operating point [ ] [CCI per Affidavit 4(a)-(d)]
  - Minimum test value [ ] [CCI per Affidavit 4(a)-(d)]
  - Maximum test value [ ] [CCI per Affidavit 4(a)-(d)]
- Inlet subcooling
  - Nominal B&W *mPower* operating point [ ] [CCI per Affidavit 4(a)-(d)]
  - Minimum test value [ ] [CCI per Affidavit 4(a)-(d)]
  - Maximum test value [ ] [CCI per Affidavit 4(a)-(d)]

©2010 Babcock & Wilcox Nuclear Energy, Inc. All rights reserved.

Not every combination of flow, pressure, and temperature is possible or desired. [ ][CCI per Affidavit 4(a)-(d)] (combinations of individual values of flow, pressure, and temperature) have been defined, as shown in Table 2.2-1, Proposed Test Conditions. Prior to the test facility being ready to commence testing, the choice of test points will be reevaluated to ensure that the test range is adequately covered.

A few transient condition cases will be run, as follows:

- [

][CCI per Affidavit 4(a)-(d)]

The transient cases will provide verification that steady-state CHF data can be used to predict transient CHF behavior.

<u>Test Series Definitions</u>

[

©2010 Babcock & Wilcox Nuclear Energy, Inc. All rights reserved.

][CCI per Affidavit 4(a)-(d)]

©2010 Babcock & Wilcox Nuclear Energy, Inc. All rights reserved.

2.3 Collection of Test Data

The data acquisition system uses a central computer which scans and records test data, typically at 10 Hz per channel, and provides selected data to various networked computers which are strategically located in the control room for test personnel to monitor and control the experiments. The system also has analog output and digital input/output channels for process control of power supplies, control valves, etc. Suitable instruments are provided to measure testing parameters, such as the coolant mass flow to the test channel, the coolant temperature at the inlet and outlet of the test channel, the absolute and differential pressures in the test channel, fuel simulator surface temperatures, bundle subchannel exit temperatures (for mixing tests), total electric power to the test bundle and the electric power to each fuel simulator in the test bundle. The key parameters have redundant measurements. All of the instrumentation is maintained in current calibration traceable to National Standards.

A computer operator uses a main control program to control the data acquisition system from a console in the control room. Several video monitors provide on-line display of selected data to the loop operators, including the key loop parameters and selected fuel simulator thermocouples. The monitoring of the fuel simulator thermocouples for CHF or DNB detection is performed using two workstations which each graphically display temperatures in real time for up to 10 (20 total) keyboard selectable fuel simulator thermocouples. All of the thermocouple signals are scanned continuously by the data acquisition system and checked for CHF using custom software with selectable temperature excursion criteria. If CHF is determined by the software program, the viewing screen on the main video monitor flashes the channel numbers that are indicating CHF to alert the test operators who can then select those channels for viewing on the workstation if they are not already on the screen. The program reduces the power by pre-programmed steps, or trips the power to the bundle, if any fuel simulator temperature exceeds specified limits, in order to protect the test bundle.

The power control operator uses a separate computer to provide the appropriate output signals to control the power supplies which provide the DC power to the fuel simulators. The power control program uses keyboard inputs from the operator to adjust the total power up or down in preprogrammed steps (usually increases of 5 or 25 kW steps and decreases of 25 kW steps). The program can also reduce the power rapidly in preprogrammed steps for `Power Down' or for emergency `Power Trip' operations which can be operator or computer initiated. The power control program measures the power and adjusts the output to maintain the desired balance between supplies.

The test data are recorded and stored on hard disk and immediately backed up to separate disks. The software programs are modified versions of existing software presently used for loop control, power control, data acquisition, safety systems, and data reduction. All software is subjected to quality assurance control and verification prior to being used for test data to confirm that the calculations are being performed correctly.

Data reduction can be performed during testing, without affecting the data acquisition activities. Specialized software tools have been developed for post-test data reduction and analyses, graphical output and communications as well as for on-line data acquisition and process control. Test data are provided on digital media, typically CD-ROM or DVD. The data acquisition system software is custom written, modified, and maintained by Stern Laboratories.

©2010 Babcock & Wilcox Nuclear Energy, Inc. All rights reserved.

2.4 Local Condition Data Analysis Methodology

The new BWNE CHF correlation will be based on local pressure, mass flux, and quality along with known global quantities (geometry and heat flux distribution). Knowledge of the local values of the state variables at the DNB points in the test facility is therefore required in order to construct the correlation. Since these quantities cannot be measured locally, a reactor subchannel analysis code, VIPRE-01, will be used to model the test setup and obtain the required local condition information. A VIPRE-01 calculation will be performed for each CHF data point.

All of the required inputs to the VIPRE-01 model will either be known in advance (test article geometry and axial and radial heat flux profiles) or measured at the time of testing (pressure, total inlet flow, fuel simulator powers, inlet temperature, and axial and radial location of DNB). In addition, other quantities will be measured for comparison with the VIPRE-01 model (outlet pressure, pressure at several axial locations, mixed mean outlet temperature, outlet temperatures in the interior channels). The fidelity of the VIPRE-01 model will be verified using these additional data points to give confidence in the local conditions predicted by VIPRE-01 at the DNB points. The friction, mixing, and heat transfer correlation options in VIPRE-01 can be chosen to optimize the capability of the code to predict the test conditions.

VIPRE-01 is a tested and proven reactor subchannel analysis code that is not proprietary to a particular vendor. It is the successor to the COBRA series of codes. When the EPRI CHF correlation was developed in the early 1980s, COBRA-IIIC was used to provide the local state variable values (Reference 1). For a similar EPRI effort in 2002, namely a study of the friction and heat transfer correlations used for modeling of subcooled boiling, VIPRE-01 was used (Reference 2).

The NRC has evaluated the VIPRE-01 topical report (the VIPRE-01 code documentation) and found it to be acceptable for referencing in reactor license applications (Reference 3). At an appropriate time, B&W will submit a report to the NRC detailing B&W's use of the VIPRE-01 computer code and request approval to use VIPRE-01 for design calculations.

©2010 Babcock & Wilcox Nuclear Energy, Inc. All rights reserved.

2.5 Development of the BWNE CHF Correlation

CHF correlations have taken many forms over the years. Early correlations were primarily based on core outlet conditions. The B&W-2 CHF correlation was proposed to and approved by the NRC via topical report BAW-10000A (Reference 4) in March 1970. The B&W-2 correlation is for B&W fuel elements with no mixing vanes. It is a 5-variable correlation that requires a total of 14 correlation coefficients. The base form of the correlation is for a uniform heat flux profile, and a Tong factor is applied to adjust for non-uniform profiles. The B&W-2 correlation was developed from data produced by 9-rod test bundles for the base uniform-profile correlation, combined with results from tests in tubular test sections for the Tong factor correction. All of the testing was performed at B&W's research division in Alliance, OH. The CHF was correlated to the conditions at the outlet of the channels in which CHF occurred. The B&W-2 CHF correlation and other early correlations are available in the open literature.

More recent correlations have achieved better results by reformulating the correlation forms to use local subchannel conditions. Such correlations must be developed and used in conjunction with a subchannel analysis code, such as VIPRE-01. Most of the recent correlations in use for reactor core design and licensing are proprietary.

One non-proprietary, open-literature correlation based on local subchannel conditions is the EPRI CHF correlation (Reference 1). The data discussed in Section 1.2, Critical Heat Flux Database, is a subset of the approximately 11,000 data points used in the development of the EPRI CHF correlation. The EPRI correlation is valid for both PWR and BWR configurations over a wide range of conditions, but it is not recognized by the NRC as being valid for use in reactor design and licensing. The base form of the EPRI correlation is similar in form (but not identical) to the B&W-2 CHF correlation. It is a 4-variable correlation that requires 8 correlation coefficients. In order to achieve its wide range of applicability, several correction factors are applied to the base EPRI CHF correlation. There are correction factors for cold wall channels, grid spacer configuration, and non-uniform axial heat flux profiles. These correction factors add variables and correlation coefficients.

[

][CCI per Affidavit 4(a)-(d)]

The development of the new BWNE CHF correlation is expected to follow an approach similar to previous CHF correlations:

- [

©2010 Babcock & Wilcox Nuclear Energy, Inc. All rights reserved.

][CCI per Affidavit 4(a)-(d)]

Once it has been developed, the new BWNE CHF correlation will be documented in a topical report and submitted to the NRC for review.

©2010 Babcock & Wilcox Nuclear Energy, Inc. All rights reserved.

3.0 Summary

The development of the new BWNE CHF correlation is expected to follow a similar approach to previous B&W CHF correlations. B&W will sponsor CHF tests at the Stern Laboratories test facility to test B&W *mPower* fuel assembly geometry and reactor operating conditions. [ ][CCI per Affidavit 4(a)-(d)] will be obtained from the Stern Laboratories test facility for a 5x5 fuel rod array simulating the B&W *mPower* fuel design.

B&W will demonstrate that the CHF data obtained from the Stern Laboratories test facility are consistent with a subset of the extensive historical CHF data obtained from the Columbia University tests and the combined data set are acceptable for developing the BWNE CHF correlation. The combined database will result in approximately [ ][CCI per Affidavit 4(a)-(d)] for the development of the BWNE CHF correlation.

B&W will use VIPRE-01 to determine the local conditions necessary for completing the new BWNE CHF correlation. For B&W *mPower* design purposes, the new BWNE CHF correlation will be used in conjunction with the B&W version of the VIPRE-01 code since the correlation will be developed based on local conditions calculated using the VIPRE-01 code with input from the test data.

B&W will complete development of the BWNE CHF correlation and submit a report to the NRC that will demonstrate that the new correlation adequately and conservatively describes the CHF performance of the B&W *mPower* fuel and is appropriate for DNBR safety analysis.

©2010 Babcock & Wilcox Nuclear Energy, Inc. All rights reserved.

4.0 References

1. C.F. Fighetti, D.G. Reddy, "Parametric Study of CHF Data" NP-2609, EPRI, September 1983.

2. J. Deshon, et. al., "Subcooled Boiling Data from Rod Bundles," EPRI document number 1003383, EPRI, September 2002.

3. C.W. Stewart, et. al., "VIPRE-01 -- A Thermal-Hydraulic Code for Reactor Cores," NP-2511-CCM-A, EPRI, October 2007.

4. "Correlation of Critical Heat Flux in a Bundle Cooled by Pressurized Water," BAW-10000A, Babcock and Wilcox, March 1970.

5. Experimental Statistics, National Bureau of Standards Handbook 91, Department of Commerce, August 1963.

©2010 Babcock & Wilcox Nuclear Energy, Inc. All rights reserved.

Table 1.1-1: Fuel Rod Description

[

][CCI per Affidavit 4(a)-(d)]

©2010 Babcock & Wilcox Nuclear Energy, Inc. All rights reserved.

Table 1.1-2: [ ][CCI per Affidavit 4(a)-(d)]

[

][CCI per Affidavit 4(a)-(d)]

©2010 Babcock & Wilcox Nuclear Energy, Inc. All rights reserved.

Table 1.1-3: Guide Tube Description

[

][CCI per Affidavit 4(a)-(d)]

©2010 Babcock & Wilcox Nuclear Energy, Inc. All rights reserved.

Table 1.1-4: Fuel Assembly Configuration

[

][CCI per Affidavit 4(a)-(d)]

©2010 Babcock & Wilcox Nuclear Energy, Inc. All rights reserved.

Table 2.2-1: Proposed Test Conditions

[

][CCI per Affidavit 4(a)-(d)]

©2010 Babcock & Wilcox Nuclear Energy, Inc. All rights reserved.

[

][CCI per Affidavit 4(a)-(d)]

Figure 1.1-1: Typical B&W *mPower*™ Fuel Rod

©2010 Babcock & Wilcox Nuclear Energy, Inc. All rights reserved.

[

][CCI per Affidavit 4(a)-(d)]

Figure 1.1-2: Typical B&W *mPower*™ Guide Tube

©2010 Babcock & Wilcox Nuclear Energy, Inc. All rights reserved.

[

][CCI per Affidavit 4(a)-(d)]

Figure 1.1-3: B&W *mPower*™ Fuel Assembly Cross Section

©2010 Babcock & Wilcox Nuclear Energy, Inc. All rights reserved.

[

][CCI per Affidavit 4(a)-(d)]

Figure 1.1-4: Typical B&W *mPower*™ Fuel Assembly

©2010 Babcock & Wilcox Nuclear Energy, Inc. All rights reserved.

[

][CCI per Affidavit 4(a)-(d)]

Figure 1.1-5: Characteristics of a Typical B&W *mPower*™ Fuel Assembly
(dimensions in inches)

©2010 Babcock & Wilcox Nuclear Energy, Inc. All rights reserved.

[

][CCI per Affidavit 4(a)-(d)]

Figure 1.2-1: Distribution of CHF Data by Sponsor

©2010 Babcock & Wilcox Nuclear Energy, Inc. All rights reserved.

[

][CCI per Affidavit 4(a)-(d)]

Figure 1.2-2: Distribution of CHF Data by Test Bundle Configuration

©2010 Babcock & Wilcox Nuclear Energy, Inc. All rights reserved.

[

][CCI per Affidavit 4(a)-(d)]

Figure 1.2-3: Distribution of CHF Data by Test Bundle Pitch/Rod OD and Rod Type

©2010 Babcock & Wilcox Nuclear Energy, Inc. All rights reserved.

[

][CCI per Affidavit 4(a)-(d)]

Figure 1.2-4: Distribution of CHF Data by Test Bundle Heated Length and Axial Heat Flux Profile Type

©2010 Babcock & Wilcox Nuclear Energy, Inc. All rights reserved.

[

][CCI per Affidavit 4(a)-(d)]

Figure 1.2-5: Inlet Subcooling and Mass Flux Range for CHF Data

©2010 Babcock & Wilcox Nuclear Energy, Inc. All rights reserved.

[

][CCI per Affidavit 4(a)-(d)]

Figure 1.2-6: Outlet Pressure and Mass Flux Range for CHF Data

©2010 Babcock & Wilcox Nuclear Energy, Inc. All rights reserved.

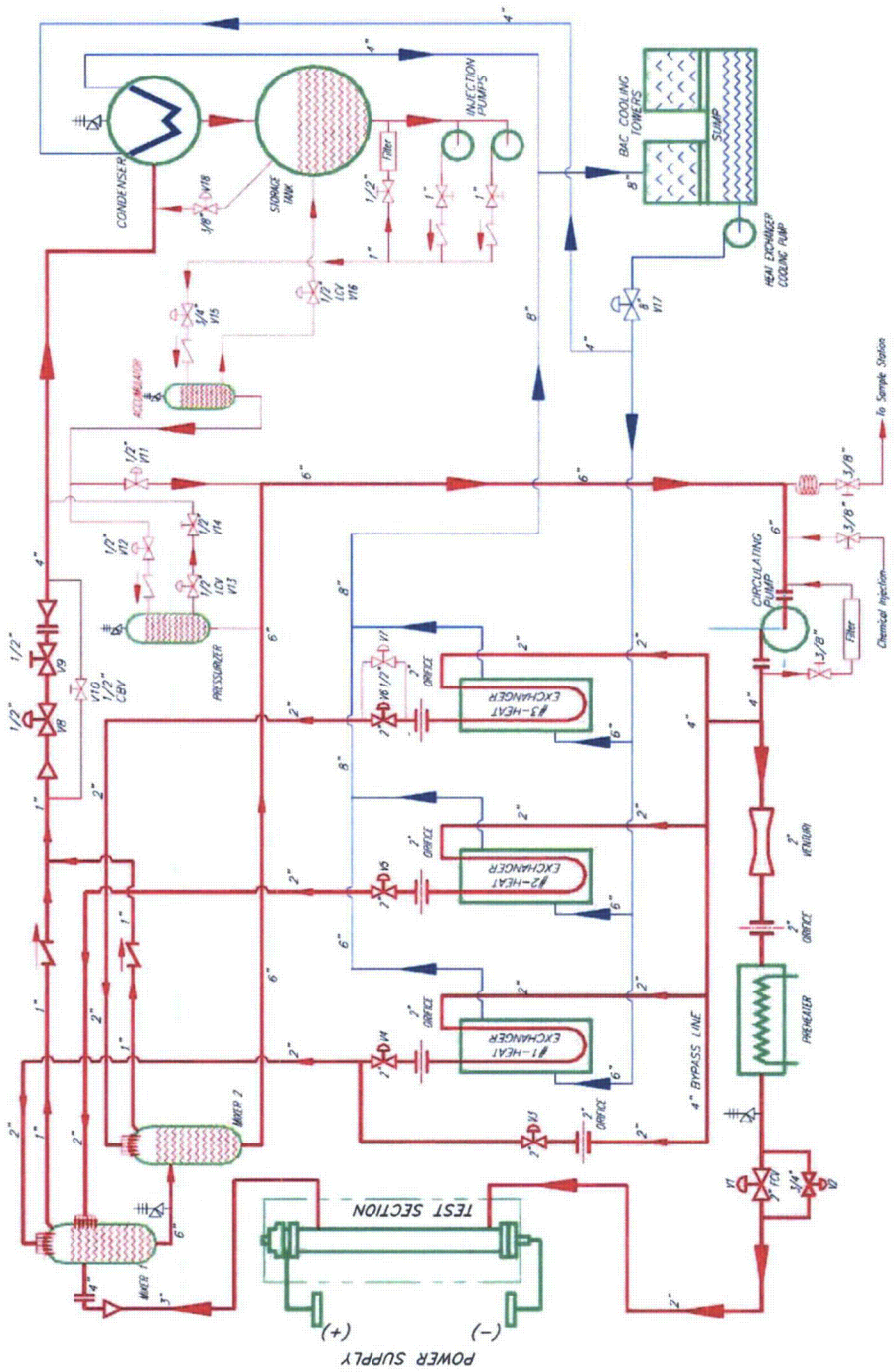

Figure 2.1-1: Schematic of the Test Loop

©2010 Babcock & Wilcox Nuclear Energy, Inc. All rights reserved.

[

][CCI per Affidavit 4(a)-(d)]

Figure 2.1-2: Schematic of the Test Section
(dimensions in mm)

©2010 Babcock & Wilcox Nuclear Energy, Inc. All rights reserved.

[

][CCI per Affidavit 4(a)-(d)]

Figure 2.1-3: Axial Heat Flux Profiles

©2010 Babcock & Wilcox Nuclear Energy, Inc. All rights reserved.

[

][CCI per Affidavit 4(a)-(d)]

Figure 2.1-4: Locations of Thermocouples and Grids
(dimensions in mm)(red-thermocouples; blue-grids)

©2010 Babcock & Wilcox Nuclear Energy, Inc. All rights reserved.

[

][CCI per Affidavit 4(a)-(d)]

Figure 2.2-1: Fuel Rod Lattice Configurations
(dimensions in mm)

©2010 Babcock & Wilcox Nuclear Energy, Inc. All rights reserved.