Official Transcript of Proceedings

NUCLEAR REGULATORY COMMISSION

Title: Advisory Committee on Reactor Safeguards
ESBWR Subcommittee: OPEN SESSION

Docket Number: (n/a)

Location: Rockville, Maryland

Date: Wednesday, November 18, 2009

Work Order No.: NRC-3195 Pages 1-141

NEAL R. GROSS AND CO., INC.
Court Reporters and Transcribers
1323 Rhode Island Avenue, N.W.
Washington, D.C. 20005
(202) 234-4433

DISCLAIMER

UNITED STATES NUCLEAR REGULATORY COMMISSION'S
ADVISORY COMMITTEE ON REACTOR SAFEGUARDS

The contents of this transcript of the proceeding of the United States Nuclear Regulatory Commission Advisory Committee on Reactor Safeguards, as reported herein, is a record of the discussions recorded at the meeting.

This transcript has not been reviewed, corrected, and edited, and it may contain inaccuracies.

UNITED STATES OF AMERICA

NUCLEAR REGULATORY COMMISSION

+ + + + +

ADVISORY COMMITTEE ON REACTOR SAFEGUARDS

(ACRS)

+ + + + +

SUBCOMMITTEE ON ESBWR

+ + + + +

OPEN SESSION

+ + + + +

WEDNESDAY, NOVEMBER 18, 2009

+ + + + +

ROCKVILLE, MARYLAND

The Subcommittee met at the Nuclear Regulatory Commission, Two White Flint North, Room T2B3, 11545 Rockville Pike, at 8:30 a.m., Dr. Michael Corradini, Chairman, presiding.

SUBCOMMITTEE MEMBERS PRESENT:

MICHAEL CORRADINI, Chairman

SAID ABDEL-KHALIK

J. SAM ARMIJO

SANJOY BANERJEE

DENNIS C. BLEY

DANA A. POWERS

JOHN W. STETKAR

CONSULTANTS TO THE SUBCOMMITTEE PRESENT:

THOMAS S. KRESS

GRAHAM B. WALLIS

NRC STAFF PRESENT:

CHRISTOPHER BROWN: Cognizant Staff Engineer and Designated Federal Official

AMY CUBBAGE

DAVID MISENHIMER

MARK CARUSO

EDWARD FULLER

ALSO PRESENT:

RICK WACHOWIAK

WAYNE MARQUINO

T-A-B-L-E O-F C-O-N-T-E-N-T-S

Opening Remarks and Objectives
Dr. Michael L. Corradini 4
Staff Opening Remarks
Amy Cubbage. 5
Discussion of Significant Design Changes and Impact on PRA Results
GEH - Rick Wachowiak 5
Probabilistic Risk Assessment: Audit Results and SE Open Items
NRO - (PM) Mark Caruso 52
NRO - (PM) Ed Fuller 93

P-R-O-C-E-E-D-I-N-G-S

8:32 a.m.

CHAIRMAN CORRADINI: Okay. Let us begin the meeting. Our second day will come to order.

I just want to remind everybody this is a meeting on the ESBWR Subcommittee.

I am Mike Corradini, chair of the subcommittee. Members present are Dr. Said Abdel-Khalik, Sam Armijo, Dennis Bley today, John Stetkar, Sanjoy Banerjee and our consultants Tom Kress and Graham Wallis.

I will skip through what I've said in the past. I'll simply remind everybody a transcript is being kept and will be made available as stated in the Federal Register notice, and will request that the speakers identify themselves and speak with clear and loud voices so they can be heard.

We've not received any requests from members of the general public to make oral or written comments.

Again, I'll ask that everybody make sure their cell phones are turned off or put in the silent mode.

And then again I know we have a bridge line, so I'll let the GE people go to their life line when they need to.

Rick, do you want to start us off?

MR. WACHOWIAK: Okay. I think Amy was supposed to start us off.

MS. CUBBAGE: Oh, yes, I'll make a few statements. I think, you know, today will be some interesting topics. The areas we're going to focus on today were mutually agreed to between the Committee and the staff. Rick's going to focus on some design changes that have been made recently and how those have been incorporated into the PRA. The staff is going to focus on the results of our PRA audit. And fortunately we're in a position with the PRA review that we're just about done. And then later on, we're going to talk about human factors. And we're also going to focus on some topics that were of interest to the Committee and the level of detail and the implementation plans.

So with that, I'll turn back to Rick.

MR. WACHOWIAK: Good morning. I hope everybody had a fun or interesting evening.

CHAIRMAN CORRADINI: No comment.

MR. WACHOWIAK: All right. So today, as

Amy said, we're going to talk a little bit about some design changes. In particular, we're focused on how we keep the fidelity of the PRA as reviewed by the staff in place as we go forward with our design process. Right now we're in the beginning of filling out a lot of details. And so, some of these changes that happened as a result of questions from the staff to change the plant need to be factored into the PRA, and that's the first attempt we've made at keeping these different parts of the analysis up to date.

So, our main issue is that --

MEMBER BLEY: I'm sorry. The ones you're going to show us now are actually included in the Rev 4 of the PRA?

MR. WACHOWIAK: Yes.

MEMBER BLEY: Okay. Thanks.

MR. WACHOWIAK: The main issue is that there are going to be configuration changes, whether you're actually design changes or just the way we operate the plant. As you go through and try to place equipment and do things, things will change. Now, the degree of the change is we expect it to be low, but there will be change.

And what we find is that for any given change there's a lot of different aspects that are

affected. In the past, making a change was simple. You just made sure that you kept your licensing basis up to date, you did your 50.59 process or your approval process and the PRA just kind of took what they got. Well, in this case the staff has already looked at the PRA and part of the decision for certification is based on what they looked at. So, we really don't want the PRA to change a lot, given a configuration change. We want it to remain to be somewhat similar or quite similar to what was reviewed and that the risk profile doesn't really change very much. So we have to manage that.

In particular, things that get us into a situation where we have to be very aware of how we manage it are things that need to be changed to address a DBA-type concern, and I'll get to why that is in a minute, with the details on that. But in general, it's because the PRA has different acceptance criteria for what's okay than the DBA analysis does. There are certain statutory things that you have to meet and they have inherent conservatisms built into them, and margins built in, whereas the PRA looks at it more in a best estimate term. And so something that might be perfectly okay in the PRA won't past muster in the DBA world. Something that passes, is

just fine in the DBA world, may change a risk profile by quite a bit. As you see with the existing plants that are out there, they all meet the 10 C.F.R. regulations and everything else, but the risk profiles are wildly different.

Just to get an idea of the magnitude of change that we had from Rev 5 to Rev 6 of the DCD, there were 29 packages that GEH put through in that time frame. Some of them were simple administrative things. We changed the name of the system, or we added a new documentation class to some of our documentation, things that don't even rise to the level of making it into the DCD.

There were in that population 15 things that when we looked at them they were issues that we don't model in the PRA and of the equipment or the operation data equipment. Some things are kind of buried in some of the analyses, but in general they aren't things that we explicitly model. I think some of the areas where we changed the way that the basemat of the reactor building interacts with the soil during a seismic event, you know, in the PRA that's a stipulation that's going to meet a certain seismic rigidity or seismic capability. And the changes they were making when they were talking with the staff

about how they meet that criteria that we already had established. So, those kinds of things don't get modeled in the PRA.

There were six things though that we ended up having to make a change to the PRA model. Five of those six were fairly benign things they changed. The changes were not even noticeable. And there was one which required extensive iteration back and forth with the PRA group and the design group. And as a matter, the I&C groups to make sure that all of our requirements were fulfilled by the change. And that's the change that I'm going to focus on in this presentation, and it's really the only one that had a potential for a large effect on the PRA.

MEMBER ABDEL-KHALIK: Now what is the criterion you used to determine whether a change -- that the impact of a change on the risk profile is benign, as you call it, versus something that requires iteration?

MR. WACHOWIAK: Okay. The next two slides that I have get into this. It's a phased process that starts out qualitative and goes more and more toward quantitative as we look at it.

So, if we can get through the next two, I hope I'll be there.

So in general, the proposed change starts out and we look at it, just like I said in the last slide in the categories, is this something that's even modeled? If it's not modeled, we say, you know, our role is to say does this sound like a good idea? If so, you know, pass on. But it's not anything to do with maintaining the risk profile.

Next, what we'll do is we'll perform a qualitative assessment if it's something that we do model, and I'll get into that a little bit on the next page with the specifics. But in general, what we're looking at there is are we changing our level of defense in depth and diversity by making this change? And if it doesn't look like we're doing something that's going to change significantly the layers of defense in depth or change the diversity that we've relied on in the various sequences, then we'll say this is something that we can model after the fact. It's not going to have an effect.

So an example of that is if we would have a function where we have the passive way of performing the function and there are let's say three active systems that provide a backup, and we're making a configuration change to one of those three systems and we're not really altering that we have three active

systems that back it up. It's just a small change to that. We would basically look at are we adding any significant failure modes? If not, it's something that could be modeled.

CHAIRMAN CORRADINI: What if three went to two?

MR. WACHOWIAK: If three went to two, that would be something where we would have to go to the next step.

CHAIRMAN CORRADINI: Okay.

MR. WACHOWIAK: Which would be a quantitative process. So we're really looking at the levels of defense in depth and are we keeping that the same and are we maintaining diversity that we have so that we wouldn't be introducing any new common-cause failures that may pop up to affect the risk profile.

CONSULTANT WALLIS: Now, Rick, I have a comment on the bottom line here. And you seem to assume that once you've updated the model it's okay to implement the change.

MR. WACHOWIAK: The green bubble is not my process. That's the rest of the process.

CONSULTANT WALLIS: No, but you said once you've updated the model, it's okay to implement the change. Don't you have to evaluate the results of the

updated model to see if it is okay to implement the change?

MR. WACHOWIAK: What you've missed there is my feedback loop back on this slide here.

CONSULTANT WALLIS: Well, it doesn't do that.

MR. WACHOWIAK: You have to get to acceptable results before you can go to update model.

CHAIRMAN CORRADINI: I think he's saying, Graham, that if they have a problem with it, they're not going to accept it.

CONSULTANT WALLIS: Well, that I accept about that stage. I thought that simply meant is this acceptable in terms of the quality in the PRA.

MR. WACHOWIAK: No.

CONSULTANT WALLIS: Okay. So that means in terms of the changes to the CDF and all that kind of thing.

MR. WACHOWIAK: Yes.

CONSULTANT WALLIS: So it's up there you do that?

MR. WACHOWIAK: We don't give our stamp of approval until we have acceptable results in the PRA.

CONSULTANT WALLIS: Okay. That's better.

MR. WACHOWIAK: And depending on when this

happened, if it happened back in Rev 1, acceptable results may have been, okay, we still meet the Commission's --

CONSULTANT WALLIS: Okay. So there has to be some important decision about what is acceptable?

MR. WACHOWIAK: Right. Today, since the PRA has largely been reviewed; as Amy was saying, we're about to get the final letter on that, what acceptable results means, not much different than what it was before.

CONSULTANT WALLIS: Well, that was my earlier question.

MR. WACHOWIAK: Yes.

MEMBER ABDEL-KHALIK: Is there a quantitative criterion by which that word "acceptable" is defined?

MR. WACHOWIAK: So for core damage frequency, since right now our core damage frequency in Rev 3 of the PRA was right around two times ten to the minus eight, internal events. And internal events, somewhere up to maybe four times ten to the minus eight would have been okay, as long as we weren't significantly changing the risk profile, which is balanced amongst the different initiators. So a ten-to-the-minus-eight-type of change typically in

current plants and in many would be negligible. But for us, it's a big deal.

MEMBER ABDEL-KHALIK: Right.

MR. WACHOWIAK: And we want to maintain the PRA as reviewed. And we'll see with the one change that we made -- well, I have numbers that we'll talk about later. But we want it to be very close. If it's, you know, order of magnitude different, absolutely not.

MEMBER ABDEL-KHALIK: Now, what is missing in this logic is a step that says this change is not currently modeled, but it really should be.

MR. WACHOWIAK: You're right. In the decision of equipment or action model, if it's determined that it should be modeled, we would take the yes path. But we do look at that sort of thing. Is it something that we just missed before and we should have modeled it? We would do that.

So the example that we have, the one design change that was fairly significant, the issues came through in an RAI where the staff said it doesn't look like the loss of AC power, loss of off-site power assumption in your design basis accidents was conservative with respect to containment of pressure. And the example that they had was the main steam line

break, which the pressure got -- it's at the end of 72 hours, got very close to the design pressure. But that's based on a lot of factors, including how much water is in the containment. And if we have active systems that are continuing to inject water during that time, it's possible that we can raise the containment pressure by a few pounds. Because you put the water into the suppression pool, it squeezes the bubble there, and we get a little bit of a pressure increase. So they wanted to know what is the impact of this?

And this is one of the things that is, I think, unique to passive plants for a couple of reasons. One is that in the existing plants you have active systems and the active systems are the ones that are operating to give the injection and provide the mitigation of the accident. And the water management isn't as crucial, because you're cycling that water. You know you have pumps that are there to take it in and out of the containment. It's not something that you would end up with a challenge on.

The other thing is, you really don't look at containment pressure for 72 hours with supposedly a hands-off situation. You get the pressure turned around in a conventional existing BWR and then the

containment analysis is essentially over. You don't worry about that. That's just, you know, within hours, eight to 15 hours, and it's done. Here we're looking at 72 hours. That's a long time to continue to inject water into the containment.

CHAIRMAN CORRADINI: So I guess I'm reading your -- maybe you're going to say it again, so just hold me off. I'm still not understanding. So the staff's question what if you enable or use active systems? This could actually get you to reach design pressure? That was the concern?

MR. WACHOWIAK: Right.

CHAIRMAN CORRADINI: Okay. Because you would add more mass and energy into the containment? Or mass?

MS. CUBBAGE: Yes, the feedwater was assumed to trip on loss of AC power. So in the situation the staff asked, well, if you don't lose power nothing's going to trip the feedwater. You're just going to keep pumping in.

CHAIRMAN CORRADINI: Okay.

MS. CUBBAGE: It wasn't a concern about them actuating active systems to try to mitigate. It was just the normal operation.

MR. WACHOWIAK: Okay. And in the case,

the specific question was about feedwater and I kind of made it a little bit generic here. Because as we looked at this issue, it's not just feedwater. It's HP CRD and other active systems that may come up.

So we started out with the simple solution. Shut off the active systems. Makes perfect sense for the DBA analysis. So you have an accident, you get a LOCA signal, just turn off all the active systems. We meet the design basis just fine. However, putting that into the PRA model I have from the early, early slides are my qualitative PRA model that we always try to use. If we have a function, we have a passive way of performing the function in one or more active systems that back that up with diverse support systems and taking the simple solution doesn't meet that criteria. We've lost our diversity and defense in depth if we just meet the 10 C.F.R. direction.

So we've got to take -- the next step for the solution is how can we make this is how can we make this less of a just terminated injection? How can we be smart about it? We can do things like isolate injection systems. And so in case of feedwater -- well, isolate injection systems rather than cutting them off. And then allow the operators

to turn them back on as necessary. Okay. So that seemed like a reasonable way to start looking at this.

But then when we actually took this part now and we modeled it in the PRA, where we said, okay, all our active systems are now going to be isolated and then we'll take operator actions to turn them back on and provide that injection if it's needed. The issue that we ran into was on the high-pressure injection systems we had two diverse systems that provided high-pressure injection in the PRA. The feedwater was already a manual action to return feedwater to service. And when we said HP CRD would now be a manual action to return it to service, we ended up with an interaction there where you have, basically it's a common human action that you're relying on to perform both of those functions. Before it was an automatic function and an operator action. Now we just have a single operator action. Essentially raised the core damage frequency by more than the order of magnitude that we were looking for there, or that we would find acceptable. So we had to go further in and -- well, my arrow there says then we went to the quantitative model, but we knew we were going to go to the quantitative model when we saw that it was a single operator action that we'd be relying

on for high-pressure injection.

CHAIRMAN CORRADINI: So you said it, but I don't appreciate it.

MR. WACHOWIAK: Okay.

CHAIRMAN CORRADINI: Your point is that if you isolate it, then you're going to rely on a single operator to do two manual actions and the chance of that not occurring correctly increases the CDF? Is that what you're saying?

MR. WACHOWIAK: Yes. If you have different operator actions for different systems, the simplistic way I guess of modeling it is saying operator fails to turn on or restore feedwater and operator fails to restore HP CRD. And you'd add those together and you get a very low number and it's no problem.

Well, the problem that really comes into play is that both of those systems are similar types of systems. The operator gets the similar cue from the power plant of what to do, when to turn those systems on. They're performed in the same time frame basically at this -- almost on the same control board, kind of, sort of, but in the same proximity. So we would link that operator action and the true driver there is the operator fails to restore high-pressure

injection. And if they fail to do that, they don't get feedwater or HP CRD. So we've lost our level of redundancy that we talked about there. We used to have two systems; now we have one system.

CHAIRMAN CORRADINI: Okay.

MR. WACHOWIAK: So when we got to that point, we knew that this was going to be more of a difficult problem than trying to solve it with some simple changes. So we got everybody together to look at what are all the constraints that we have for this? For the DBA LOCA analysis, you've got safety-related equipment only that you can credit. Okay. We have to take a single failure. Non-safety systems are allowed to do bad things to your accident, but you're not allowed to get any credit for them doing any good things for you. So the feedwater, HP CRD adds the mass and it caused a problem. It's not saying that in addition to adding mass it's also preventing the core from failing, because we don't get to take credit for that in the dark blue bubble. All the parameters that we look at are basically at the analytical limits. So the leakage in the vacuum breakers is at its maximum analytical value and the setpoints are all at their maximum or minimum, maximum, wherever, the worst case values.

CONSULTANT WALLIS: What would be the leakage of this maximum analytical value?

MR. WACHOWIAK: In the design basis analysis, much of what we talked about yesterday and last month, they assume that the vacuum breakers are leaking with the -- it's either the one square centimeter or the two square centimeter area.

CONSULTANT WALLIS: And that's the only thing that's allowed?

MR. WACHOWIAK: That's what's allowed in the design basis accident analysis.

CONSULTANT WALLIS: Oh, but in an accident anything can happen. So the PRA should describe realism, shouldn't it, not just --

MR. WACHOWIAK: That's why I'm talking about the dark blue bubble, which is the design basis LOCA. I'll get to the purple bubble --

CONSULTANT WALLIS: Okay. You'll get to the real one sometime? Okay.

MR. WACHOWIAK: And once again, no operator actions for 72 hours is what is credited there. And then finally, the drywell pressure has to remain below the 45 pounds.

Let's move over into purple bubble where we can take credit for safety and non-safety equipment

to perform benefit and detriment as applicable.

We'll just best estimate parameters. And since it's a Design Certification PRA, they tend to be upper bound best estimate parameters. So it's not quite the real story, but it's closer.

In our model we knew that we had to have one automatic high-pressure injection system, because that's where the diversity and redundancy was going to meld together here. So we just put down that as a requirement. We're going to have to have one high-pressure injection system that works automatically.

The drywell pressure, we get to go to the ultimate pressure here. So from our point of view, even if the containment pressure went to 46, 48 pounds, so what? The analysis that we have shows it's about 150 pounds before we're worried about it breaking. So, you know, from our point of view doing nothing would have been just fine for the PRA, but it wouldn't have met the dark blue box for the safety analysis. So this is one where it was just completely diametrically opposite.

And then finally, our acceptance criteria is that the CD and LRF values remain essentially unchanged from what was already reviewed by the staff. It's an internal requirement for us.

On top of that, if we were going to implement anything using a digital control system, then we have to bring in the diversity and defense in depth from the digital control system. So if we implement something with software, we're going to have to have a back up to also back that thing up. So on the design basis side, if we chose certain software-based solutions, we'd have further requirements coming on top of that.

And then finally, there's a URD requirement that we have that up to a one-inch LOCA, one-inch diameter-hole-sized LOCA, we're supposed to be able to mitigate that with HP CRD without any ECCS actuation. So that's a third constraint that falls on top of all this.

CHAIRMAN CORRADINI: Can you say that constraint again? I didn't appreciate it.

MR. WACHOWIAK: Yes, basically for passive plants it's documented in one of the SECYs. I think it's the same one that has all the RTNSS stuff in it. Maybe not. Anyway, but through the URD there came a requirement that if you have a very small LOCA; and they defined that at the time as equivalent to a one-inch hole, your active non-safety systems need to be able to mitigate that such that you won't actually

actuate your ECCS systems.

CHAIRMAN CORRADINI: So, are you trying to tell me anything less than a one-inch LOCA is defined not to be a LOCA?

MR. WACHOWIAK: No.

CHAIRMAN CORRADINI: Well, I mean, what I --

MR. WACHOWIAK: What we're saying is we special LOCA. We're saying we have to have a non-safety system that can keep the core covered in that situation in such a manner that we won't actuate the safety systems. So if everything works on this non-safety system, we don't blow the plant down and actuate GDCS and move all the water around in containment.

CHAIRMAN CORRADINI: Okay. So it's kind of like what I said maybe wasn't appropriate in words, but it sounds like you've defined a small LOCA to be handle-able as part of normal operation without defining it from a plant protection standpoint as a LOCA.

MR. WACHOWIAK: Yes, it's mainly there to minimize the challenge on the ECCS systems.

CHAIRMAN CORRADINI: And that was a SECY?

MR. WACHOWIAK: I don't remember. I think

the SECY was documenting the URD, and I think the requirement came out of the URD. And when the --

CHAIRMAN CORRADINI: Utility Requirement Document?

MR. WACHOWIAK: Utility Requirement Document. And when the staff reviewed that, these were some of the things they picked out and mentioned.

CHAIRMAN CORRADINI: Okay. All right. Thank you.

MEMBER ARMIJO: So a really big leak?

MR. WACHOWIAK: It's a really big leak. And, you know, the intention was you don't want to open your reactor vessel depressurization valves just because you have a really big leak. You want to have a LOCA before you would be required to do that.

MEMBER ARMIJO: Thank you. Okay.

MR. WACHOWIAK: Okay. So a lot of constraints there. And my Venn diagram didn't work out too well in the Adobe printing of this, but in the PowerPoint it looks really cool because there's really a very small intersection in the middle. The black and white handout it shows up. So I guess I didn't get make my point in color here, but you know, there is a small intersection.

So, I'll jump right to what the solution

was and anybody can ask questions about any of the details there.

But the first thing we did was let's give ourselves a little bit of margin, a little bit of operating room here so that we can maybe not make some of these -- if we have to credit operators, maybe we don't have to credit them as soon, things like that. So we want to start off by lowering the initial containment pressure. So we did a tech spec change to lower the normal operating pressure or the maximum operating pressure during normal operations by half-a-pound. Buys us a half-a-pound. Less nitrogen in, so you know, it gets us started.

CHAIRMAN CORRADINI: So a sub-atmospheric drywell?

MR. WACHOWIAK: No. No, no. Two pounds was the --

CHAIRMAN CORRADINI: Okay.

MR. WACHOWIAK: I'm sorry, 16 PSIA was what the value was before. Sorry, I jumped to a setpoint there instead of a -- anyway --

CHAIRMAN CORRADINI: So it goes from --

MR. WACHOWIAK: Fifteen-and-a-half is what the tech spec -- PSIA is the tech spec value for --

CONSULTANT WALLIS: But doesn't this send

waves to all the other accidents?

MR. WACHOWIAK: What's that?

CONSULTANT WALLIS: If you're going to start changing the containment pressure, this changes the condition for all the LOCAs and all kinds of other things.

MR. WACHOWIAK: It did.

CONSULTANT WALLIS: So you would have tremendous waves going through your PRA.

MR. WACHOWIAK: Absolutely. Through the PRA, through the safety valve sys, through everything. This was not simple.

MS. CUBBAGE: It's not a trivial RAI.

CONSULTANT WALLIS: Seems a very risky thing to do.

MR. WACHOWIAK: Yes, simple question. What happens if the power doesn't go off was not as simple to answer, when you throw in all the different constraints that we had. It would have been very simple if we could have just said, well, we have power. Then the active systems take over and we don't have to worry about it. We didn't get to do that.

So the next change that we made was to raise the spill-over hole elevation. And for those that studied the PRA, you noticed that there is a hole

between the lower drywell and the vertical vents. So essentially it limits the amount of water that can be in the lower drywell. In some of these -- go ahead?

CHAIRMAN CORRADINI: Let me just stop you. So maybe it's obvious to everybody else; I don't get it. Why did you start off at 16 pounds?

MR. WACHOWIAK: That was the typical value. For BWR, I think that --

CHAIRMAN CORRADINI: Why?

MR. WACHOWIAK: I don't know why. It's historical.

Wayne, do you know why?

CHAIRMAN CORRADINI: Did you PRA types actually just used history and accepted it? I'm must asking. It doesn't make sense to me. I'm missing something. So why 16 pounds?

MR. WACHOWIAK: Well, that was the previous tech spec value.

CHAIRMAN CORRADINI: Okay.

MR. MARQUINO: It's common to the operating BWRs' containment analysis. And we did a review with utilities to identify whether it would be an operational concern to reduce it, and they didn't have any concerns with it. So we --

CHAIRMAN CORRADINI: No, but I'm asking a

different question. I'm saying why isn't it 14.7?

MR. MARQUINO: Oh, to accommodate barometric pressure changes. Well, the barometric pressure can change, so we let the drywell absolute pressure be a little bit above 14.7. Also, the Mark 1 containments had this containment pump back system where they were keeping the drywell pressure elevated above the wetwell pressure and they probably wanted a higher allowable tech spec to accommodate that.

CHAIRMAN CORRADINI: Well, okay. Let me just make sure I'm clear about this, because I'm learning something; I apologize. So you're telling me by some sort of operation between wetwell and drywell in the vacuum breakers that you need some positive Delta P there to close the -- I mean, this is what I think I --

MR. WACHOWIAK: No.

CHAIRMAN CORRADINI: So I'm still back to why not 14? Why not some number closer to ambient? I'm still curious. It seems that gives you margin. It solves a lot of your problems.

MR. MARQUINO: The containment is sealed up, so just heating will cause it to pressurize.

CHAIRMAN CORRADINI: Right.

MR. MARQUINO: So it's not coupled to 14.7

directly.

CHAIRMAN CORRADINI: So you're saying just by isolating and then essentially getting to power, of course you're heat up the atmosphere and it typically rises to about that level?

MR. WACHOWIAK: It rises to less than that level, and that's the limit that we would operate at.

CHAIRMAN CORRADINI: Okay. Okay.

MR. WACHOWIAK: So it's there to allow some operational maneuverability.

CHAIRMAN CORRADINI: Okay. So this tech spec is thou shall not get above 16?

MR. WACHOWIAK: Right.

CHAIRMAN CORRADINI: But you can operate below 16?

MR. WACHOWIAK: Yes.

CHAIRMAN CORRADINI: Okay.

CONSULTANT WALLIS: But you want it above atmospheric, don't you?

CHAIRMAN CORRADINI: Well, and that's why I'm asking --

CONSULTANT WALLIS: Yes, I'd think that much difference.

MR. WACHOWIAK: On this containment it may not be as crucial. In the Mark 1 where it's a

freestanding metal containment it's real important to not go negative.

CHAIRMAN CORRADINI: Right, that I got. But I'm trying to figure out if the history just drove you to something, or there was a real reason for this design.

MR. MARQUINO: Another reason Jeff Grogan pointed out is there's nomadic leaks typically, so you tend to come up in pressure and you periodically have to vent to control that. So we don't want to have too many venting cycles. So that's why we provided 16 PSIA before and 15.5 now.

CHAIRMAN CORRADINI: Okay.

CONSULTANT WALLIS: You want it to go out instead of in, so you do want to be above atmospheric.

MR. MARQUINO Yes.

CHAIRMAN CORRADINI: Sorry, I didn't understand. Sorry.

MR. WACHOWIAK: The second one was the spill-over hole. Basically, what this helps us for is in situations where we have feedwater still coming into the containment. Feedwater, albeit colder than the reactor water, it's still warmer than what's in the containment. And what this does is it raises the level that you have to get the extra water in the

lower drywell before the warm layer will essentially move into the wetwell and the evaporation from the warm layer will pressurize the wetwell more. So we're delaying when we would get the hotter water into the wetwell by raising that.

CHAIRMAN CORRADINI: So this is a weir wall? We're talking about that barrier wall?

MR. WACHOWIAK: Well, this is in the vertical vent. So in the suppression chamber the blow down pressurizes the drywell. Steam goes to the vertical vents and then into the suppression pool. What we've got is a hole between the lower drywell and some of the vertical vents so that essentially when you turn on the equalizing system for long-term passive cooling, it closes a circuit path from the suppression pool through the equalizing lines into the vessel outbreak through the spill-over hole and back to the suppression pool. It closes that circuit.

MEMBER STETKAR: You know, this is a good discussion, but you've asked and said that we need to stop at 2:00 p.m. today.

CHAIRMAN CORRADINI: Sorry.

MEMBER STETKAR: Today was supposed to be PRA. We should have had this discussion during the last meeting, but we were put off, because I thought

it was going to be an interesting technical discussion about why the design changed. I've got probably an hour's worth of questions on simply PRA matters. This is kind of neat, but we should have had this discussion earlier or in a separate meeting.

MS. CUBBAGE: Well, we do have three more hours on PRA this morning.

MEMBER STETKAR: Human factors and --

MS. CUBBAGE: Human factors starts at 1:00.

CHAIRMAN CORRADINI: Okay. Sorry.

MR. WACHOWIAK: When I get to --

MEMBER STETKAR: This is important. I'm not trying to belittle the importance of this, but it's a fundamental change to the plan which is reflected on the PRA.

MS. CUBBAGE: I think we were reacting to what we thought you wanted. So we can proceed.

MEMBER STETKAR: Well, no, I'm interested. We want to talk about the design. I'm just trying to be responsive. Mike has a hard deadline.

MR. WACHOWIAK: That's right. That's right. I apologize.

MEMBER STETKAR: That we need to stop at 2:00 p.m. today.

MS. CUBBAGE: I understand.

MEMBER STETKAR: So we don't have any back-end wiggle room on this.

MEMBER BANERJEE: Carry on without --

MEMBER STETKAR: If everybody's interested on the Committee and understanding the design, that is important. But I just want to make the comment that we may not have time for the PRA.

MEMBER BLEY: I guess as you go through, Rick, related to what Graham said, some of these things you're changing you have to question lots of other -- where else could this matter and --

MR. WACHOWIAK: Right.

MEMBER BLEY: If you could give hints as you go through how you track back where else this could be important in the design process, the PRA, I think, will be easier.

MR. WACHOWIAK: Okay.

MEMBER BLEY: You know, to keep track of it.

MR. WACHOWIAK: So to not back track too much, the lower initial containment pressure, we know that that's associated with operational maneuverability. We talked to the potential customers. Is this going to be a problem for you?

Technically it's not going to be a problem in the reactor. Raising the spill-over hole elevation, we had to go back through in the safety analysis and determine whether or not we would still be able to be successful operating things like the equalizing line with the different elevation of the hole. That still had to all work.

MEMBER BLEY: Did it change some of the margins for you? Did anything get tighter than it was before?

MR. WACHOWIAK: No, it essentially lowered the pressure in the containment in scenarios when we were adding feedwater.

CONSULTANT WALLIS: So how much change in initial pressure is this?

MR. WACHOWIAK: Oh, boy, we had a stack up of this at one point in time. I didn't think to pull that off my list. The first one was about a half-a-pound change and I think the spill-over hole elevation was probably another half-a-pound change, something like that.

CONSULTANT WALLIS: So it changes all the figures that you've shown us for all these accident sequences, because you've got less nitrogen now in the whole system?

MR. WACHOWIAK: But what you have as of now reflects all of this.

CONSULTANT WALLIS: Reflects all this?

MR. WACHOWIAK: This has all been factored in. Maybe that's why the wiggles went away. No, that's all reflected in what you have now.

So the next thing we did is we looked at how we isolate the feedwater system and when we would isolate the feedwater system. Before we counted on loss of off-site power to perform the isolation. And the other thing that we counted on was low -- or high lower drywell water level. Well, if we're not counting on the one anymore, we still need a diverse system. So we looked at this and now we're going to isolate feedwater on a high high drywell pressure. So if we get up to approximately 4 PSIG in the drywell, we're going to say, you know, we're pretty sure we've got a LOCA. Let's not keep feeding this LOCA with feedwater. Isolate the feedwater valves, put it back into recirc.

But the issue that we came up with with that one though is that in ATWS we're relying on feedwater to provide the makeup in ATWS, so this particular scenario is bypassed in ATWS. We already have ATWS bypass for several trips that are in the

ECCS system. We just added this feedwater isolation on drywell pressure to that. So that's another place where there was some feedback. We've relied on a system in the design basis ATWS analysis. And if we were going to affect how that was, we needed to make sure that that effect didn't change anything.

MEMBER BANERJEE: Wouldn't you have to drop the level in ATWS?

MR. WACHOWIAK: We dropped the level. And then at some point you have to stop dropping the level. In existing BWRs that's done with manual operator action. In ESBWR that's done automatically. Or it's not done automatically. The operators have to take manual action, but they don't have to restart any systems. The feedwater system is already running and they could just change the level setpoint. So we wanted to preserve that, but we also wanted to keep the valves open during that time.

MEMBER ABDEL-KHALIK: But what would give you a high high --

MR. WACHOWIAK: A LOCA. drywell.

MEMBER ABDEL-KHALIK: -- wetwell in that scenario, in ATWS scenario?

MR. WACHOWIAK: In ATWS? It could be a LOCA and an ATWS. Wayne's got another one where they

can give us --

MR. MARQUINO: Some of the SRVs discharge to the drywell, so it would be consistent with the ATWS scenario.

MR. WACHOWIAK: Okay. Yes, the SRVs that discharge. So we don't want that to happen in there, so we looked at that.

Also we talked about in the qualitative analysis if we just change our HP CRD trip to an isolation, so the HP CRD now would be going back into recirc. In the PRA we wanted to look at that because we're not adding the additional failure modes of starting the pumps again, cutting them off and then starting them back up again within a short period of time. That tends to be something you don't want to do. Takes out some of the failure modes and it keeps the model more similar to what we have by not adding the extra start and the other support systems that would also have to change state.

But to do this in a safety-related way, we had to add safety-related isolation valves. So this is where we got to the one point where we added the isolation valves. And we picked where we do that and which scenarios would do it before the HP CRD was terminated only based on low GDCS pool level. And now

we looked at more ways to we do this. And we looked at all various spectrum of breaks from leaks, to breaks in the steam leaks, to large breaks in the liquid phase to determine what that pressure would be. In the end, we decided that the two-pound drywell pressure plus a high lower drywell water signal would be the thing that would tell us to cut off HP CRD, or isolate HP CRD in this case.

However, in the PRA, as we said before, we want the HP CRD to provide a back up high-pressure injection system. So if we have a LOCA in the liquid phase, which is what's giving this high drywell water level and then GDCS doesn't work, well it would be nice to have that high pressure system to work. So what we did was we added bypass valves around that, which in the even that there was a signal, we got a LOCA signal, Level 1, okay, or one of the other LOCA signals, but anyway a LOCA signal, we expect GDCS to inject within a few number of minutes. We monitor the level in the GDCS pool. If it doesn't inject, then we're assuming GDCS didn't work, and so this system will now take the high pressure CRD system, bypass that original isolation and put it in.

So in essence, we've met the safety analysis. HP CRD is isolated when we have the LOCA,

but it takes more than a single failure to get to the point where you don't inject GDCS. So if we've gotten beyond single failure, multiple failures were no longer in the big blue bubble. We're now down in the purple bubble and we can use HP CRD.

CONSULTANT WALLIS: So is HP CRD ever not isolated?

MR. WACHOWIAK: If you get a Level 1 signal, which is a very low level in the reactor, then it's always going to be isolated.

CONSULTANT WALLIS: You're bypassing it. You're duplicating the valves. Why don't you just --

MR. WACHOWIAK: Well remember, we're isolating it on the low water level signal.

CONSULTANT WALLIS: Right.

MR. WACHOWIAK: Then we wait and we watch the GDCS pool levels. If the GDCS pools drain, then we leave it isolated. If they don't drain, we say, ah, we need more water.

CONSULTANT WALLIS: Originally it's not isolated. It's not isolated originally. Then you isolate it.

MR. WACHOWIAK: Yes.

CONSULTANT WALLIS: And then instead of opening it again, you bypass it?

MR. WACHOWIAK: Yes. And the reason that we go with the bypass gets back to the digital I&C software-controlled I&C systems where the software failure that could have failed the isolation also affects the bypass. And then we end up with interaction in the software --

CONSULTANT WALLIS: So it's actually two parallel paths.

MR. WACHOWIAK: -- that we have to have a diverse means of performing that function.

CONSULTANT WALLIS: You could call the bypass the isolation and the isolation the bypass. This is two parallel paths.

MR. WACHOWIAK: Two parallel paths.

CONSULTANT WALLIS: Okay.

CHAIRMAN CORRADINI: So, do you have a question, John?

MEMBER STETKAR: I'm fine.

CHAIRMAN CORRADINI: Okay.

MR. WACHOWIAK: And some of these are bypassable by the operators. This last one, we looked at to address that LOCA condition, the small, small LOCA, we'll let GDCS inject for an hour and if the drywell pressure is still high, then a decision has to be made. Do we want to continue to make up with the

non-safety system, or do we want to go ahead and let the safety system actuate. The automatic action is let the safety systems take over. We can accommodate injection with HP CRD for an hour, however, the operators can decide, no, my HP CRD system is just fine for this. I'll deal with the containment some other way. And then they take manual control over the plant and deal with that small LOCA differently.

MEMBER ABDEL-KHALIK: Roughly what's the flow rate associated with that in gallons per minute?

MR. WACHOWIAK: The maximum flow from HP CRD is about 1,000 GPM.

MEMBER ABDEL-KHALIK: No, for the one-inch line break.

MR. WACHOWIAK: It depends on where the break is. If it's in the steam phase, it's not very much. If it's in the liquid phase, that's 1,000 GPM.

MEMBER ABDEL-KHALIK: A thousand GPM for a one-inch line?

PARTICIPANT: That's a leak.

CONSULTANT WALLIS: I mean, the GPM leaving the RPV isn't the same as the GPM coming in from the HP CRD, because they're different temperatures.

MR. WACHOWIAK: You're right, and it's an

equivalent thing. The flow rate of the HP CRD is designed so that it can make up for a one-inch hole in the bottom of the vessel.

MEMBER ARMIJO: Is there a margin from it?

MR. WACHOWIAK: A little margin. Remember, it's a non-safety back up system that's supposed to minimize the challenges on ECCS. So we wouldn't put the same kind of margins there, but there are some. I can't tell you what it actually is.

MEMBER STETKAR: Rick, I'll ask you this one: The bypass stuff is all driven from ICP, the independent control -- whatever it's called.

MR. WACHOWIAK: An independent control platform together for that.

MEMBER STETKAR: Right. There are interlocks; I call them interlocks, there are signals that come in there. It's got to recognize that there's a LOCA and drywell pressure and something like that. Did you install separate signal transmitters also?

MR. WACHOWIAK: Yes.

MEMBER STETKAR: Separately? So you replicated --

MR. WACHOWIAK: Right.

MEMBER STETKAR: Not on the logic, but you

have a completely redundant set of level transmitters, and I think drywell comes in there?

MR. WACHOWIAK: That's what we had to do.

MEMBER STETKAR: Holy cow. Okay.

MR. WACHOWIAK: Now we keep the same instrument legs, so there's just another --

MEMBER STETKAR: Yes, it's a leg, but you install separate transmitters?

MR. WACHOWIAK: Yes.

MEMBER STETKAR: That was one of my questions from the previous meeting, was how the signal logic entered.

MR. WACHOWIAK: Yes. And that's how we had to do that. When Skip presented his diversity diagram, if you do down through there, if you get to a point where, you know, you've got to have different things --

MEMBER STETKAR: That's fine. The answer is yes. That's all I care about. Thanks.

MR. WACHOWIAK: And those are the kind of constraints we had to look at going through. In the end, this is the figure for HP CRD, or for CRD out of Tier 1. The parts in blue ended up being what we needed to change in Tier 1. So basically, we added the new isolation valve, the parallel path. Notice

it's one's function to close; the other one's function to open. And one has to be CRE, the other has to be parallel. The other thing we had to add was a redundant mid-flow line, because now when it's on recirc it's got to be able to operate from either of the two divisions. So we needed a mid-flow line per division.

CHAIRMAN CORRADINI: So that blue piping is for recirc purposes?

MR. WACHOWIAK: When it goes into the isolation mode --

CHAIRMAN CORRADINI: Oh, it has to trip the pump?

MR. WACHOWIAK: -- it has to sit there and recirc --

CHAIRMAN CORRADINI: -- operating on a recirc?

MR. WACHOWIAK: Right. And before we didn't need that, so we could get away with one valve. Now we are requiring that function, so we have the parallel valves. So we tried to minimize the change. Even though it looked like it's a lot of stuff, we still worked to minimize things.

So in the end, we'll jump to the chase here, we met all the DBA requirements with and without

AC power available. So we were able to do that. Risk profile remained virtually unchanged. So the numbers during this analysis, the Rev 3 CDF was like 1.2 times ten to the minus eight. It went up to 2.2 times ten to the minus eight just after modeling this change. In the end, when we got done with all the changes, it was about 1.7 times ten to the minus eight. So we got back from other places. You know, other changes were made.

LRF essentially was about the same. It was about nine times ten to the minus ten and it went to 2.1 times ten to the minus nine. Eventually settled in at about 1.4 times ten to the minus nine by the time we got to Rev 4. So we looked at that. We tried to keep those essentially unchanged. This factor of two or so is, you know, really good. If we started to get more than a half an order of magnitude, we'd probably start to be concerned about it, because it would be changing what had already been reviewed.

The conclusion that I take away from this is we do have a configuration process, a change process, and I think it was reviewed during the audit, the process that we had described in the PRA document. This was one of the exercises of this and I think we got through it fairly well. We demonstrated it

several times during the certification. That's the change process that we had where we take things and we document it in the other chapter. And if it's significant, we model it now. If it's something that can be delayed to the next actual change, we use the documentation in our Section 21 and then bring it up to date in the next Rev.

Fairly efficient. This was, you know, a lot of work, but it worked out without too many hiccups over the course of performing this.

CONSULTANT WALLIS: Well, you said it's a small change, but in fact it adds to the CDF about as much as there was there before. So it's really changing -- this is a relatively small-looking change.

MR. WACHOWIAK: Yes.

CONSULTANT WALLIS: So is the change because you've changed the conditions for other events, or because you've changed --

MR. WACHOWIAK: No, in this particular one it was because we added the failure mode of those --

CONSULTANT WALLIS: Of this event. So it's only this event that's really affected? You haven't affected the other events?

MR. WACHOWIAK: Yes, we had sequences that were just completely gone and they ended up being in

play in this because the system wasn't just there operating. We had more control systems, more valves, more failure modes. So you could see with just a fairly simple change and going -- you know, this is not a topic for certification, but for other things. Fairly simple things could end up changing the CDF on a relative amount by quite a bit, but you have to remember, you know, zero plus zero is still zero.

CHAIRMAN CORRADINI: John?

MEMBER STETKAR: Yes, I don't know quite how to do this. When I was looking at the models for a different issues, I noticed that the LOCA models had changed. One of my issues has been how is the whole PRA stitched together. So I can't do that in a general sense. I have to get specific and look at bits and pieces of the model and kind of assure myself that those are stitched together. And I stumbled over something doing that. And it seems that when you made the changes to the LOCA event models, the mapping from the Level 1 core damage sequences from those LOCA models to the Level 2 boundary conditions, if you want to call them that, was not changed. I have specific examples here, but it's pretty consistent that you changed the number of sequences in the logic configuration and the LOCA trees, but the old

sequences are left mapped to flags in the Level 2 model. You know, I can give you specific examples if you want, but it's just alphabet soup.

And just for the record, and if anybody wants to dig into the models, it's the mapping to the Level 2 event fault tree in Figure 8.A-8, sheets 166 and 167 in particular. This is just an example of a place that I stumbled over it. I'm not saying that this is the only place. I'm not saying that I did any kind of, you know, holistic review. I just happened to stumble over this place.

Are the fault trees that are shown in the Rev 4 PRA report duplicates of what's actually in the computer model?

MR. WACHOWIAK: I believe so. I checked the sequence that you were looking at, the loss of feedwater 33 sequence.

MEMBER STETKAR: That one is modeled correctly.

MR. WACHOWIAK: Okay. Because that's where I was confused.

MEMBER STETKAR: No, that one's modeled correctly; the LOCAs are not. If you look at the load; I think I mentioned this in an aside yesterday, that particular sequence gets to the right point --

MR. WACHOWIAK: Okay. Yes, that one does.

MEMBER STETKAR: -- in this particular mapping. I've got a different question about that point, but in terms of the transition, the change between Rev 3, let's say, and 4 of the PRA to implement this design change, I spot checked transient sequences that go into that logic and they seem to map correctly, but none of the LOCAs do. They're off by one sequence number because there's a new branch in some part of the LOCA event tree.

MR. WACHOWIAK: Okay. Well, what we're --

MEMBER STETKAR: So it doesn't look like somebody followed through the Level 1, 2 interface when you made the changes to the event trees. And I don't want to say anything more.

MR. WACHOWIAK: While we're doing other things here this morning, I'll check on that. I've got those --

MEMBER STETKAR: I thought that I mentioned the LOCAs yesterday, but I might not have, because I focused you on that one sequence for another reason.

MR. WACHOWIAK: So what I was looking at for the feedwater was it modeled that way in Rev 2 and did it change? And it didn't change, so I was --

MEMBER STETKAR: It didn't change. Rev 2 didn't change. And it went to the right place in, you know, Rev 2, 3, 4.

MR. WACHOWIAK: Let me take a look at that. I've got the file here and I've got --

MEMBER STETKAR: And I can point you to the points. I've got details of the sequence numbers, if you want to track them.

MS. CUBBAGE: Well, I was going to say if there aren't any more questions about this specific presentation, maybe we should go to the staff and then Rick can confer with --

MEMBER STETKAR: Okay. That's a good idea. Some of the questions I'm going to ask are kind of overlap between I think your review and GEH.

CHAIRMAN CORRADINI: Good.

MEMBER STETKAR: So it's good for the staff to come up?

CHAIRMAN CORRADINI: Yes.

MS. CUBBAGE: I'd think we'd like to have staff go up and then Rick can come back up if needed for the extended Q&A.

CHAIRMAN CORRADINI: That will give Rick a chance to --

MR. WACHOWIAK: Yes, let me pull that,

because the first place I'm going to look is to see if the figure didn't get updated.

MEMBER STETKAR: Yes, I mean, that might be the answer.

MR. WACHOWIAK: I hope that's the answer.

MEMBER STETKAR: I'm not sure what I hope on that.

MR. MISENHIMER: Okay. Good morning everybody. My name is Dave Misenhimer.

CHAIRMAN CORRADINI: Okay.

MR. MISENHIMER: My name is Dave Misenhimer and I the project manager for Chapter 19. And today we're going to talk about the results of the PRA audit and resolution of open items. Mark Caruso is going to lead off with the discussion and Ed Fuller will finish it.

So, Mark?

MR. CARUSO: Thank you, David.

I'm Mark Caruso. I'm a senior risk and reliability analyst in the PRA group and was the team leader on the audit and I've been focusing on the Level 1 aspects of the ESBWR design PRA. Ed Fuller is here with me. Ed's a senior risk and reliability analyst in the PRA group also and has been the lead on the reaction to Level 2 PRA.

Basically, the purpose of our discussion today is brief the Subcommittee on the results of the staff's audit of the ESBWR design PRA and to talk about resolution of some of the key open items that were of interest to the Committee.

The outline for the presentation was to first just briefly go through a little background, how we got here, where we came from. Then I'm going to talk about the audit and Ed's going to talk about resolution of open items, primarily those issues about related to the BiMAC.

As you'll recall, last June of 2008 we briefed the Subcommittee on the status of the review of Chapter 19 of the ESBWR DC. At that meeting there were a number of issues raised about the PRA, some concerns about the transition from Rev 2 of the PRA to Rev 3 of the PRA. So we had a separate meeting in August of 2008 on the 21st through the 20th where were discussed the PRA in some detail and those issues. In October we briefed the full Committee on the status of the review of Chapter 19 and Chapter 22. In October of that year, the Committee prepared an interim letter on Chapters 19 and 22 and identified a number of issues that we had discussed in August in the letter.

We responded in November and in a number

of cases indicated that we agreed with the ACRS on those issues. In some cases we issued some RAIs to be addressed by GEH. We indicated we would fold that into the look that we took when we went down to do the audit.

In May of 2009, we went down to GE and did the audit. In July, we issued the audit report to GEH. And in late June, the final version of REV was completed and given to us by GEH. When we were down there in May, they weren't quite finished yet with all the dressings and documentation and that sort of thing. So we looked at a draft Rev 4 which we indicated to them that we had hoped that we would have had the final Rev 4 when were there, but we didn't. That was just the way it was. So when we did get final Rev 4, we did review a number of areas to make sure that what we had looked at when we were done there, that what we got was consistent with what we looked at when we were down there.

MEMBER ARMIJO: I just want to make sure I understand. You audited a draft Rev 4, or did you audit a final Rev 3?

MR. CARUSO: Draft Rev 4.

MEMBER ARMIJO: Draft Rev 4?

MR. CARUSO: Originally we were basically

at the sort of 95 percent mark. All the stuff was in the model, in the computer model. A lot of the documentation was done, but all the documentation wasn't completed.

MEMBER ARMIJO: So it wasn't in sign off? They were still documenting what they had done?

MR. CARUSO: Right.

MEMBER BLEY: But the model itself was the final form? Not quite?

MR. CARUSO: Yes. And the discussions we had, I mean, what we looked at was what was on their screens.

MEMBER BLEY: Okay.

MR. CARUSO: I mean, we met with the engineer. In fact, they have one engineer who's sort of the model integrator.

MEMBER BLEY: Yes.

MR. CARUSO: And he was the guy we spent most of our time with. And everybody who did system models, feeds this guy. He reviews them. He stitches the thing together, if you will. And he's the guy that said, wait a minute, you know, I got all the pieces of the pie here and when I put the pie together, I have some issues. In fact, at one point he showed me his long list of questions back to the

system modelers for them to address. So in any case, when we wanted to look at fault trees and event trees, it was his version that we looked at. And I forget his name.

In any case, I mean, we did look at paper there. I mean, when we looked at map runs, we looked at map calculations and results. But when we looked at the PRA, the fault trees and the event trees and had questions about that, we went up and sat with him and looked at what was on the screen, because he was the keeper of the official model.

Okay. The audit. Quick summary. We conducted the audit in GE's offices in Wilmington May 6th through 8th. We were there for two days. I think after we were there for one day, at least I wished I could have been there for two weeks. It was a very complicated model. It's huge. Again, just having these issues and you wish, you know, you had time to sit there and chat all day with this model integrator. And then you find out what you can learn by visiting with these folks and looking at what's there, you realize that it's a much more efficient process than going through what documentation they give you.

So in any case, we didn't have two weeks. We weren't there to do a peer review. We were there to do a two-

day audit.

We had six people with us, six tactical folks, plus David was there as the Chapter 19 PM.

CHAIRMAN CORRADINI: Mark, I think there's a question.

MEMBER STETKAR: Yes, you mentioned peer review and the fact that you only conducted a pretty limited two-day audit. Has the PRA been subject to a peer review, an industry peer review? And I could ask GEH, but I mean, you folks --

MR. CARUSO: No.

MEMBER STETKAR: No? It has not? Okay.

MR. CARUSO: We went through this issue with them a couple years ago.

MEMBER STETKAR: Okay. I thought I'd read some place that it had, but I probably was --

MR. CARUSO: Well, and what they did do and what we found to be acceptable was they conducted their own in-house self-assessment. They formed a team and they basically divvied up the PRA and looked at it. Our question had been you say to us in your Chapter 19 that for the most part you meet category 2, acceptance criteria in the standard. And we said, well, you know, how do you know that? And, you know, why is that good enough? And so, I mean, in general

category 2 was fine with us. I mean, but we wanted to know how they got to that point. And they hadn't done a peer review. And we said we need to have more than just that statement for us to say, you know, our criteria were do we feel that this PRA is good enough for the application? We don't have any requirements here in the regulations. We have nothing to say you have to meet this or meet that. They're not required to meet anything in particular. But we felt that in keeping with the perspective of Reg Guide 1.200, it was, you know, is it good enough for the application?

I got off on a tangent here. So, they formed this team. They went through and they walked through the PRA and compared with the supporting requirements in the standard. And in cases where they didn't meet those, we asked them to explain why and why it was okay. And they did that. There was an RAI that was issued in 2007, I think. They responded in early 2008 and discussed the self-assessment and the results in some depth. And we were satisfied with their explanations.

In many cases the explanations were, well, you know, we don't have that information yet. This is operational information, you know, within the areas of human factors and in some cases data. In some cases

it was because there were things in the standard that were really geared for operating reactors and operating reactor PRAs. And so they made good arguments that this is a design PRA and in some cases you don't want to use it that way. You want to use it in a different way. So that's what they did and --

MEMBER STETKAR: But the fact is that the PRA hasn't been subjected to an independent external peer review other than the audit that you folks conducted?

MR. CARUSO: Correct.

MEMBER STETKAR: By people who, you know, haven't been involved in the actual development of the PRA?

MR. CARUSO: Correct.

MEMBER STETKAR: Okay.

MS. CUBBAGE: Oh, Mark, correct me if I'm wrong, but wouldn't the peer review be required for the COL when they have their final PRA before start up?

MR. CARUSO: Correct.

MS. CUBBAGE: Okay.

MEMBER STETKAR: Thanks.

MR. CARUSO: Okay. So as I said before, we looked at a draft Rev 4 of the PRA and we compared

the final Rev 4 when we got it in June to see if there were any issues.

We performed the audit consistent with our NRO Office Instructions for Audits, prepared the report in the same way.

Sort of a 50,000-foot view of the audit. I tried to summarize, I think, sort of the really high-level points.

You know, one of the objectives was to go down there and say, you know, when we got Rev 3, we just had this Chapter 22, which just talked about the changes. It was really Rev 2 on Chapter 22. The intent was to go to a Rev 4 that actually incorporated everything into the PRA and, you know, all the sections included all the information and it wasn't just a summary in Chapter 22. We felt that they had done that adequately.

We focused on a number of the concerns that had been raised about the Level 1 modeling issues, a number of which were in your letter, and we felt that they had resolved those.

We discussed a number of open items when we were down there. We resolved a number of those in principle and discussed what needed to be submitted to us in writing from GEH to complete the closure

process. And that in all cases has well been done.

Now, I'd like to talk about a number of the key topics that we considered in the audit.

In initiating events, we looked at their approach to identifying specific initiating events that focus on looking for initiating events that were ESBWR-specific. As opposed to just taking a list of events from, you know, the old BWRs and saying, okay, here's what we did in the past. You know, is there anything else. You know, I don't hear anything. Let's move on.

They discussed with us their process which basically utilized their system engineers to really focus on for their systems were the things, failure modes particular to their systems for ESBWR, looking for special initiators that might come out of that.

So I believe our feeling was they do have a process. It was more than just an ad hoc is there anything else there. It involved a lot of the PRA group. It involved the whole design group and primarily the system engineers. They do have a section now in Chapter 2, although I think it was always there, called special initiators, where they discussed this process, they discussed what they found.

We also looked at the treatment of initiating events in accident sequences. When we were talking about the PRA in August of 2008, one of the changes they had made to go to Rev 3 was to lump the loss of air initiating event with the loss of feedwater initiating event because they had pretty much the same; in fact, identically the same sequence of events. But what you couldn't see was what about all the things, you know, downstream in the top events that could be affected differently by loss of feedwater, loss of air.

So we sat down and walked through how that was treated in the PRA. And they have a systematic approach to do that, which basically relies on turning event trees into large fault trees. And which apparently I'm not that familiar with the CAFTA code, but apparently it's a standard sort of method that's used there. So they walked us through how they did that and how they ensured that they were capturing the effects of loss of air on the system models or the loss of feedwater and, you know, we were satisfied with what they had done. We understood it and were satisfied with it. I think I described it in the audit report and I don't plan to walk through it.

MEMBER STETKAR: Mark, can you back up to

the initiating event? The last bullet there said they changed the standby.

MR. CARUSO: I'd forgot --

MEMBER STETKAR: Can you mention something about that or should I?

MR. CARUSO: I'm sorry. I'm very sorry.

That was another issue that we discussed in August, was one of the changes they had made was to change the category of the standby liquid control injection line break from a medium LOCA to a small LOCA. And we reviewed the basis for that with them. Their documentation had found that -- you know, we looked at the criteria. It had to do with the actual, you know, break size when you consider the throat that's in the pipe. That criteria on actual break size, actual flow area and flow rate, they met their criteria. We looked at the actual analysis of the event and it certainly looked like a small LOCA, so we felt that they thought it was adequate justification for the change.

MEMBER STETKAR: One of the questions I had back in August was, first of all, the fact that that break was modeled as a medium LOCA, which has been resolved by transferring to the small LOCA category. The corollary of that in this sense of

stitching the model together is that the medium LOCA break model does not transfer to an ATWS condition. The small LOCA break model does transfer. There are sequences that come out of the small LOCA that transfer to the ATWS model. The ATWS model requires success of two of two injections of standby liquid control. So if you do indeed have a standby liquid control injection line break that then transfers to the ATWS model, that should be guaranteed core melt. That dependency is not picked up in the Rev 4 model.

MR. CARUSO: Really?

MEMBER STETKAR: Yes, it's not. There's not a flag hung on the LOCA; or I couldn't find it anyway.

MR. CARUSO: I thought --

MEMBER STETKAR: Maybe GE knows where it's hidden. I couldn't find it. It might be there. I don't have the time to look at every bit and piece of every --

MR. CARUSO: Well, what I remember, and I agree, but --

MEMBER STETKAR: It was one of the areas that I was looking for when they made the change to the small LOCA, and I couldn't find it. The flag hung over in the ATWS part of the LOCA model. It might be

there, because as you know, there are pages and pages of fault tree. When I look in the --

MS. CUBBAGE: So, let's take --

MEMBER STETKAR: -- does GEH have a --

MS. CUBBAGE: Well, I was just going to suggest, let's take a list of these things that we're not going to be able to answer on the spot.

MEMBER STETKAR: Yes, let's put that one on the table, because --

MS. CUBBAGE: And then maybe after the break --

MEMBER STETKAR: Poor Rick's looking at other things.

MS. CUBBAGE: Yes. No, but I mean after the break maybe we can --

MEMBER STETKAR: Yes, that's one in terms of --

MS. CUBBAGE: -- address those.

CHAIRMAN CORRADINI: So this is something that -- Rick, have you got what he just said?

MR. WACHOWIAK: Small LOCA. ATWS shouldn't have any more failure required to get the core damage.

MEMBER STETKAR: Standby liquid control, small LOCA, ATWS.

MR. WACHOWIAK: Yes.

MEMBER STETKAR: But I don't think there's a separate --

PARTICIPANT: He needs to speak into the mike.

CHAIRMAN CORRADINI: You're not speaking into the mike. You're not catching him.

MR. WACHOWIAK: Even if I said it, they wouldn't have understood it. Small LOCA, ATWS, core damage.

CHAIRMAN CORRADINI: Okay.

MS. CUBBAGE: He's got it.

CHAIRMAN CORRADINI: Okay.

MEMBER STETKAR: SLC, small LOCA, ATWS.

CHAIRMAN CORRADINI: Yes.

MEMBER STETKAR: To be exact.

CHAIRMAN CORRADINI: To be exact.

MEMBER STETKAR: Okay.

CHAIRMAN CORRADINI: John, did you have another question?

MEMBER STETKAR: Mark, on the initiating events, I didn't see anything in the audit report. You did look at the mapping of the loss of instrument error.

MR. CARUSO: Yes.

CHAIRMAN CORRADINI: And they did that fine. Did you look at or think about the grouping of any other initiating events? In particular, there are several what I called detailed initiating events that are grouped into transient categories. You mentioned loss of instrument error as grouped with feedwater. It's actually not grouped with feedwater in a mechanistic sense, because it's actually quantified separately through the model. However, there are a lot of electric power failure events that are grouped with general transients that indeed the model as it's constructed right now does not account for the dependencies of those electric power failures in the same way that the model accounts for the dependency correctly now of the instrument error failure.

Did you spend much time thinking about that grouping of what I called detailed initiating events into the broader event categories? I mean, you did check the instrument error one, which is something that we did bring up.

MR. CARUSO: Well, I can say is when -- I didn't check what you just said.

MEMBER STETKAR: Yes, you only had two days. I was just curious whether it was an area that --

MR. CARUSO: But when discussing this with the engineer, you know, I did talk to him about, you know, this is your broad approach and I do remember him saying that there were many other cases where this is how that was handled. It was to basically take those individual events and treat them as working in the big fault tree.

MEMBER STETKAR: There are many cases where individual events are treated separately, but there are many cases where they're grouped together just under a generic heading.

MR. CARUSO: You mean different types of loss of powers?

MEMBER STETKAR: Yes. Well, loss of power to a particular bus, for example.

MEMBER BLEY: And I didn't spot that, but what you're saying, John, is the dependency later is not --

MEMBER STETKAR: It's just quantified. It's not quantified as a separate initiating event with a separate name. It's just the frequency of that event is grouped into, for example, a general transient initiating event or something like that. And from that point forward in the analysis it looses its identity. The loss of instrument error initiating

event right now is given a unique identifier and it indeed is quantified through the model through the logic process as a unique initiating event with a house event input wherever the instrument error dependency applies. But that's okay. We don't have enough time to go through details. I was just curious.

MR. CARUSO: I mean, I don't know that I verified it, but I do know that they -- I mean, they have said that, you know, in cases where they have multiple trains of stuff that can fail or multiple initiating events like loss of this bus of that bus, or this train of power, that train, that they look at whether or not there is symmetry and do they need to look at both cases. Of if there's asymmetries, then they need to account for that and that they do. But I can't say that I've gone in and verified that. Apparently what they say may not be the case.

MEMBER STETKAR: I was just curious how much -- in terms of a two-day level of effort in an audit, there's so much stuff to look at that --

MR. CARUSO: We tried to pick samples. This was a real sample kind of approach.

MEMBER STETKAR: Yes.

MR. CARUSO: We picked samples and we

tried to pick those samples in a way that in many cases were areas that had been identified by you all as issues of concern. So when we started picking --

CHAIRMAN CORRADINI: And then it overlaid other things, I assume.

MR. CARUSO: -- started picking our samples, that's what we picked.

MEMBER STETKAR: Yes, go on. We're going to run out of time.

MR. CARUSO: And, you know, in this particular case the general methodology and approach I felt kind of captured other areas.

CHAIRMAN CORRADINI: So is there a comment by GEH?

MR. WACHOWIAK: Not on that, but the small LOCA SLC flag is in the model.

MEMBER STETKAR: It is.

MR. WACHOWIAK: Yes, it's on 4.4-2, sheet 1.

MEMBER STETKAR: Sheet 1? Could have missed it. Thanks.

CHAIRMAN CORRADINI: Okay. Go ahead. Sorry. Mark, back to you. Excuse me.

MR. CARUSO: All right. We'll move to the topic of data analysis.

Here I think the concern here was that the documentation of, you know, in many cases where the data had come from was really sort of the issue we were concerned about and was lacking in Rev 2 and Rev 3. So when we were there, we looked at basically how they developed their data and what the bases were. In general, much of the data that they've used is generic data. That's data that came from the Advanced Light Water Reactor Utility Requirement Document, a number of operating reactor NUREGs. And they started with that and in cases where there were aspects that were, you know, of how that data was derived, particularly test intervals, they adjusted it and used those values.

We particularly looked at the values they used for the vacuum breaker failure rates and the squib valve failure rates and the digital trip models. They provided a basis for those which in general were what I just described. They essentially used generic data and compared it. In the case of the vacuum breakers, they compared it with what they had done for the ABWR, sort of a SLC test.

MEMBER BLEY: I've got a question about that. You weren't expecting that.

MR. CARUSO: Yes.

MEMBER BLEY: As I read it, I compared what they'd done before and what they've done now. And now it looks like you made a change to the way you used the generic data. But it looks like; I hate to say it this way, but this is what it looks like, it looks like you took generic on valves that aren't anything like these one-of-a-kind design valves that we're looking at, put a factor of eight on it. And the only reason I can see you use a factor of eight is it gave you the same answer as you got out of the Bayesian analysis with an informed prior and the informed prior was informed by the failure rate from these same generic valves.

Now the one convincing this is the sensitivity case that says even if we're wrong by a factor of ten; which maybe you are, it only makes a ten percent, or five percent change now in the core damage frequency. But just the way it's laid out doesn't make sense to me and your report kind of said we didn't get it either. And so it just looks funny and I'd rather not see it look that way.

MR. CARUSO: Yes, I mean, I think, you know, when we're used to, you know, operating reactors PRAs where there's a lot of --

MEMBER BLEY: Well, what I'd say is they

have a good test program. If they'd taken that test data and used a centrally and non-informative prior, or justified a prior with some information in it, although I don't know how they'd do that, I'd be much happier than this kind of hokey mixing of information from things that -- I don't know why the generic valve data is more relevant than pump data for this thing. This thing's just different. I don't see any connection. So, you know, the comforting thing is I think if you did it with an uniformed prior and seen what the sensitivity results are, it wouldn't be a big deal. But you come at this thing and you say we've got a few very unique things. How were they handled? It doesn't look like they're handled real well. And from your report it looked like you didn't quite what they did or see the justification. I don't see it either.

MS. CUBBAGE: Would you like to put this one on the list for after the break, or do you want Mark to --

MEMBER BLEY: Only if they can bring something to it. You know, I think it doesn't affect the overall result that much, but it's disappointing to see these --

MS. CUBBAGE: Well, let's --

MEMBER BLEY: -- a key design feature like this not treated in a way that at least to me seems well defended.

CHAIRMAN CORRADINI: I'm sorry, I was --

MS. CUBBAGE: Vacuum breaker.

CHAIRMAN CORRADINI: I figured that's what you were talking about.

MEMBER BLEY: Yes.

CHAIRMAN CORRADINI: Okay.

MEMBER BLEY: I mean, it's one thing. It's in a key place. And we're covered because we have more standard valves backing it up, and that's why it looks okay in the overall core damage results, even if its failure rate is a lot worse.

MS. CUBBAGE: Okay. Let's catch that one after the break.

CONSULTANT WALLIS: Well, I'm glad you asked, because I was going to ask the same thing. I read your report and I couldn't understand your conclusion. On here it says "reasonable." In your report the words are "reasonable," but it's unclear how the values were obtained. Well, I don't see how that's reasonable if you don't know how the values were obtained.

MEMBER BLEY: Yes, that jumped out.

CONSULTANT WALLIS: So you're ambivalent. It's reasonable, but you don't know what they did. So how can it be reasonable?

CHAIRMAN CORRADINI: Are you asking for him to clarify his words?

CONSULTANT WALLIS: Yes, which words do I take seriously? The reasonable part or the other part?

MR. CARUSO: Well, let me review what we said before I answer.

CONSULTANT WALLIS: Well, maybe it's something the staff needs to sort out. I mean, if we don't --

CHAIRMAN CORRADINI: Yes, I've probably not addressed it. I'm just looked at GEH if they want to say anything. But I think the way Dennis characterized it is reasonable.

MEMBER BLEY: Tell me why it's not.

MR. CARUSO: Actually, I think there's some confusion here about what was meant here, and I'm sorry about that. But I think what was meant here was is that when we were there, we were able to see what they had done. What we're saying we didn't see was they had me actually put it in the original version of the PRA. So when they're saying, oh, now that you

show it to us, we're here. We see this stuff. We looked at the numbers and we looked at the -- I think he even looked at the prior, that stuff, too. What we're saying is that we saw it there and hadn't actually documented it.

And in addition, I think what we say later on is is that they agreed to incorporate and make sure that it was clear in Rev 4 of the PRA. And I think if you go in there now, you'll find, especially in the table with all the data at the bottom, there are footnotes explaining where the value came from.

MEMBER BLEY: Where did the factor of eight come from? The only place I can see it came from is to make it match the other analysis.

MR. CARUSO: Well, I think they gave the reference of the approach that they followed to come up with the error factor.

MR. WACHOWIAK: CARUSO: Yes, this is Rick Wachowiak. The way that the factor of eight comes in is adjusting for -- the generic data typically assumes a three-month interval between tests and we know these valves have 24-months in between tests. So everything that was derived from data that had a three-month interval between tests we multiplied by eight.

MEMBER BLEY: Oh, okay. I see where that

came from. Thank you.

MEMBER STETKAR: So the valves are modeled precisely the same as the generic valves?

MEMBER BLEY: Yes.

CHAIRMAN CORRADINI: Which was the basis, right?

MR. WACHOWIAK: Yes.

CHAIRMAN CORRADINI: Okay.

MR. CARUSO: And that's documented in Rev 2 in the footnote.

MEMBER BLEY: And physically that makes no sense to me. I mean, you look at those valves. They're not anything like any other valve. Well, if you can show me a valve that kind of looks like that on which we have generic data and works the same way, I might change my feeling. But I don't get it.

MR. WACHOWIAK: It's a rather unique valve.

MEMBER BLEY: It is, but you run a good test program and if you took that test result with a non-informed prior, I wouldn't be saying all of this stuff.

MR. WACHOWIAK: Yes, the other thing that I think we're possibly missing here -- and I'm trying to confirm this, and I don't know that I have the

right document with me, so if Gary Miller's on the phone, I'm sure he can find the right document. I think that these valves are also in the D-RAP program. So by virtue of being in the D-RAP, that means that our procurement specifications and the qualification testing that needs to be done from the manufacturer will have the reliability that we've specified in the PRA as part of the purchase spec.

MEMBER BLEY: Will you give them back if they don't work?

MR. WACHOWIAK: Well, no, they're going to have to do sufficient testing to show that it matches. That's what's required for the new plants. So we took what we had, which was the generic data, recognizing that it is a unique valve. We did have a testing program on a prototypical valve, so we have some knowledge. We updated the data we had based on a test frequency and a simplified methodology, but nevertheless something that's acceptable. And we did a sensitivity to see is it really, really important that we nail this down to, you know, five decimal places, and the answer is no.

So, our conclusion was that given that we have the number here and it's going to be part of the requirements for that valve anyway, doing all this is

somewhat less important at this phase of the certification. Because there is another hook later that says, okay, even if it was off by a little bit from something that we could have done with a non-informed prior, we'll have more information by the time this is installed, and that's where it's supposed to land.

MEMBER BLEY: I won't dispute that.

MR. WACHOWIAK: All right.

CHAIRMAN CORRADINI: You guys are more adept. I'm trying to understand this from the standpoint -- so Dennis' question when we originally started this whole conversation when we had gotten the test data, and there was a question about some previous analysis that I don't understand. Let's just leave it at that. You can't take the test data directly because there's just not enough testing to develop a failure criteria? Is that the essence of it?

MEMBER BLEY: No, I think they can and I think it would look just fine.

CHAIRMAN CORRADINI: Oh, okay.

MEMBER BLEY: And I wouldn't have asked all these questions if they had.

MR. WACHOWIAK: That's right. We can and

it would work just fine, but I think the next question that we would get, maybe not from you, but from someone, is how do you know that that's the valve you're going to build and why is that test data any more appropriate than anything else?

CHAIRMAN CORRADINI: Which leads you to the D-RAP program?

MR. WACHOWIAK: Right. So we think what we did was a reasonable approach on this and consistent with our use of generic data in other areas of the PRA.

CHAIRMAN CORRADINI: He hears you, but we may agree to disagree, but we hear each other.

MEMBER STETKAR: Mark, before you start on this one, let me just close the loop, because I did look back at the fault tree that Rick pointed me to, and indeed the flag is hung in there on the SLCS injection line break.

The reason I missed it is I was looking for it up in the top part of the logic, and it's down in the part of the fault tree multiplied by a factor of 2.3 times ten to the minus two for some sort of apportioning of fractions of injection line breaks that are injection line breaks or something. So it's frequency is reduced by a factor of, you know, forty-

something or other. I wasn't expecting to see that. Because I thought if they'd quantified the frequency of an injection line break, it would be a direct contributor. And I missed it. I mean, there is the flag going in there, but it's in an and gate with multiplier number on it.

MR. WACHOWIAK: This is Rick. That's the fraction of all small liquid line breaks that are standby liquid control lines.

MEMBER STETKAR: Well, no, you can't do that because this specific initiating event is quantified as the standby liquid control line break. So you can't take a fraction of all small LOCAs that are that break and multiply it by that break.

MR. WACHOWIAK: Yes, I don't think it's actually doing that. I'll find out.

MEMBER STETKAR: So you better not say that that's what that is. But at least the flag's in there. I did miss the flag. I would have had a question about the factor.

CHAIRMAN CORRADINI: Go ahead, Mark.

MR. CARUSO: I remember looking at this and I thought I was looking in the event tree somewhere where it was account for --

MEMBER STETKAR: Yes, you can't find it in

the event tree. The only place you could find it is where it is, but it's multiplied by this number for something.

MR. CARUSO: Okay. Accident sequence analysis. And here we chose to particular sequences to look at in some detail. We reviewed those sequences, looked at the top event structure, looked at the success/failure logic, the branch points and felt in both of those cases that it was sound.

We also looked at success criteria. Four particular success criteria were picked and the reviewer sat down with the folks that had done the math analysis for each of these cases and reviewed the math analysis with them and felt that what they had done was acceptable.

In the system modeling area, we focused on the treatment of failure modes. We looked at what the standard said about inclusion and exclusion of failure modes criteria. It discusses this topic, but doesn't provide any explicit criteria. We looked at how this was addressed in the self-assessment that they had done and felt that they had considered this topic adequately. We noted that after our meeting in August where this topic was discussed some concerns were raised about the treatment of failure modes, that they

had gone back in and looked and incorporated additional failure modes of the GDCS fault tree. They also took another look at test maintenance on availability, discussed their process for doing that. I remember that was an issue. Here again, they utilized the system engineers to look at what's the best estimate in their view of what testing and maintenance we would expect to do in these systems. And they based their assumptions in the PRA on those assessments. In cases where systems were covered by tech specs but the best estimate was there would be no on-line, you know, test or maintenance, they incorporated the tech spec allowed outage times into the model.

MEMBER STETKAR: Mark, I'd like to understand how they did that, because when I looked at the electrical system models, I couldn't find any treatment of test and maintenance on availability at all, despite the fact that the tech specs allow you to have essentially one train of equipment out of service indefinitely. So I read those words, but I don't know where they're implemented in the fault tree model. And maybe GE could point me to like this small liquid LOCA flag. They could point me to where you've accounted for divisions of AC and DC power unavailable

due to maintenance. Because it's allowed by the tech specs and I suspect people will perform on-line preventative maintenance on these plants to keep outage times small.

MS. CUBBAGE: While allowed by tech specs, I believe the maintenance rule would also kick in to make sure they're not just keeping this division in parts all the time.

MEMBER STETKAR: I understand that the maintenance rule would limit the duration, but that doesn't say the unavailability is precisely zero.

MS. CUBBAGE: Right.

MEMBER STETKAR: Which, as best as I can tell, is what's in the model.

MS. CUBBAGE: They have an extra division of safety-related power and I&C, so basically at any time they could have three and not bee in an LCO.

MEMBER STETKAR: The tech specs require you to have three operable at all times, which means basically --

MS. CUBBAGE: They have a spare.

MEMBER STETKAR: -- you can have one inoperable indefinitely and then they transfer to -- with one required division out of service, you have an LCO time, which in the real world could be two

simultaneous electrical divisions and so forth. I see none of that contribution from maintenance modeled in those systems.

MS. CUBBAGE: I think that's a good question, and if GE's not --

MR. WACHOWIAK: I can address that. Do you want me to address it now, or after they're done?

MEMBER STETKAR: It's probably easier, Rick, if you just put it on your plate and we can address some of these --

MR. WACHOWIAK: All right.

MR. CARUSO: We also wanted to see if they had made any changes in the design or the PRA since they went from Rev 3 to Rev 4, and of course they did. Rick and I sat down and Rick walked through -- in fact, we had all the design change sheets there. We walked through them one-by-one, and as he said, there was only one that really made a difference and it was a significant difference. I'm not talking about the change since Rick went through it.

You know, we looked at the treatment of it in the PRA, the addition of the bypass capability, the level of redundancy and diversity, the use of the separate platform and overall felt that they had dealt with the change acceptably in terms of incorporating

it in a way that was acceptable from a risk perspective and was an active treatment of the PRA.

The other change they had made was the composition of the material in the BiMAC sacrificial layer, and Ed's going to talk about that when he talks about the Level 2 severe accidents, so I'm not going to say anything about that.

MEMBER STETKAR: Mark, I hate to keep bouncing back and forth, but I'm looking at too many notes at the same time here. The second bullet under system modeling, you looked at the GDCS fault tree and they looked through the additional failure modes for spurious closures of valves and things like that, made sure that they integrated that with the deluge system. And I spot checked that also, and they seem to have done that.

There was one failure mode though that they didn't seem to input to the deluge system models which is in the GDCS models, and that's leakage from the GDCS pools. In the GDCS injection models leakage from the pool, a pool will disable the respective pool for injection, which makes sense. That leakage is not input to the deluge valve models, or I couldn't find it. Again, I'm not saying I could do a 100 percent review of it.

MR. CARUSO: Well, it looked to me like no water in the pool is considered in the deluge branch point in 8 -- whatever it is, 8A. I mean, I looked there to see what they have --

MEMBER STETKAR: That header is there. The basic event isn't under it for the leakage.

MR. CARUSO: We talk about it in the text. We talk about, either the valves don't open so you don't get any water. Or if you don't have any water in the pool --

MEMBER STETKAR: Or the pool's empty.

MR. CARUSO: -- or the pool, you can't get -- the maintenance valve is locked close. So it looked to me as though it wasn't just a matter of the deluge valves themselves was the only way. They also considered whether or not you had water in the pool. Is that what you're --

MEMBER STETKAR: That's the subject. It's just that when you look at the actual details of the model, there are three ways to not have water in the pool for injection. That is that the pool has leaked, that the deluge valves have opened spuriously and dumped the water down into the lower part of the drywell or that the maintenance valve is closed.

In the deluge models, these deluge valves

opening spuriously can't contribute to failure of deluge, because that would be a success. So those are not in there. The maintenance valve being closed is in there, but the pool leakage is not. So they were sensitive to the spurious closure of a manual valve issue that we raised, but they apparently weren't so sensitive to other types of things. That's a bit of the danger of making specific comments, because people say, ah, there's a specific issue; we'd better fix that one, rather than thinking in more general terms of what the specific issue is symptomatic of. And that being, being careful about when you integrate the model you need to think about all of the different failure modes that can affect different parts of the model, rather than just somebody saying, well, you missed this one valve here.

So if the pool leakage is in there, Rick, it's another thing, if you're keeping notes.

MR. WACHOWIAK: Don't know why it's in there.

MEMBER STETKAR: Don't know why it is or isn't?

MR. WACHOWIAK: Why it is. Typically the passive failure do make it in.

MEMBER STETKAR: Given the fact that it's

in there.

MR. WACHOWIAK: Given the fact that it's in there.

CHAIRMAN CORRADINI: So this is something we'll come back to. Okay.

MEMBER STETKAR: And again, people will argue that numerically for, for example, GDCS pools A and D, that particular failure mode is probably not a very large contributor. On the other hand, it could be the largest contributor to B/C, because B/C has two separate sets of lines coming out of it that are then multiplied together, granted with common cause failures of injection valves and deluge valves and so forth. But the leakage, you know, will probably be a visible contributor as the spurious closures of the valves are visible. I'm not saying dominant, but all the little pieces add up.

MR. CARUSO: I looked at it yesterday. I never got anywhere near that level of detail.

MEMBER STETKAR: Okay. Well see, the difference is is that your audit, you're going to talk about some things, if I ever let you get to these slides, but things I haven't even looked at. I've taken narrow spot checks in the things that I've done. You didn't have the time to be able to go into that

level of detail, so it's not surprising necessarily that you didn't delve down into the bowels of some of the things, because I didn't go as broad as you did.

CHAIRMAN CORRADINI: Is the time for a break?

PARTICIPANT: It is for me.

CHAIRMAN CORRADINI: I mean, we've got a switchover plan. I'm waiting for BiMAC.

MR. CARUSO: I've got a little bit more.

CHAIRMAN CORRADINI: So I have this funny feeling we're getting close.

MR. CARUSO: Almost. One more bullet.

CHAIRMAN CORRADINI: Okay.

MR. CARUSO: And I was going to talk about --

CHAIRMAN CORRADINI: That's what I thought.

MR. CARUSO: Not very long ones.

We also looked at the shutdown risk analysis when we were there. There were some issues that we had been working with on GE about incorporating some draindown events that they had not included in the model from operator errors and from breaks outside containment in RWCU lines. They had agreed to go ahead and incorporate those in the model

and had done so. And so we looked at those trees when we were down there and found some problems with them in terms of some of the logic, had to do with the treatment of blowdown, having blowdown modeled before taking credit for GDCS. They acknowledged that and agreed to fix that and they've done that. And we've looked at the revised trees and are happy with them.

We also had some issues about their crediting the ICS in Mode 5, issues about whether or not it would work with the head vents opened. So we discussed with them the design details of the vents and issues of closing the vents and how long that would take. I think we got squared away what it is we needed to have from them in order to say we were satisfied that they can credit the SES, and we issued an RAI. That's one of the RAIs we issued after the audit and since that time they've responded to it and we've reviewed it and we're satisfied with their response.

So, we also looked at the high winds analysis. We had had a number of questions about the high winds analysis, about which sites were included in their assessment. They had gone back, and to address our concerns with the analysis, had included coastal sites. And in doing so had increased the core

damage frequency from high winds significantly since the frequency of high winds on those coastal sites is much higher than what they had assumed originally.

We looked at what they had done and whether or not the assumptions they were making were consistent with the change they were getting in core damage frequency and felt it was.

They completely revised the high winds assessment, and so we looked a fair amount in the audit, but we're still -- actually, that's the one last thing in the PRA, in the Chapter 19 review that we still haven't finished yet as to review the complete rewrite of the high winds assessment. So that's going on right now.

MEMBER BLEY: Mark, I didn't look at that. It's not just the frequency and intensity of the winds; it's also the modeling that's changed?

MR. CARUSO: Yes.

MEMBER BLEY: Okay.

MR. CARUSO: In fact, originally they didn't do any modeling.

MEMBER BLEY: Okay.

MR. CARUSO: That would be one of the concerns.

MEMBER BLEY: Fair enough. That was one.

I didn't look at it all.

MR. CARUSO: So, that's all I had. We were going to then move onto the Level 2 severe accidents and into the BiMAC issues, so --

CHAIRMAN CORRADINI: This is a good stoppage point. Let's take a break here for about 15 minutes. We'll come back at about 25 of.

(Whereupon, at 10:23 a.m. off the record until 10:42 a.m.)

CHAIRMAN CORRADINI: All right. Why don't we get together?

Okay. Ed, you're leading this part?

CONSULTANT KRESS: Before we start, I have to recuse myself because I've accepted money to review BiMAC in the past.

MS. CUBBAGE: Hold on a second. Are we back in, because the transcriber is confused.

CHAIRMAN CORRADINI: You have to say it louder.

CONSULTANT KRESS: I have to recuse myself on BiMAC because I am conflicted.

MR. FULLER: Good morning. I'm Ed Fuller. I'm the reviewer for the Level 2 and Level 3 PRA and severe accident evaluations in the PRA branch of the Division of Safety Systems and Risk Assessment of NRO.

I'd like to talk about a couple of open items that we discussed at the audit, originally discussed with you previously and then discussed at the audit for the purpose of expediting closure. These are the BiMAC performance and also severe accident management technical basis issues that we raised.

I don't have any slides on the severe accident management technical basis, but I do want to orally state what happened at the audit.

Well, prior to the audit we got a very detailed response to our RAI and that response appeared in the document MFN 09-074 from GEH to the NRC dated January 31st, 2009.

At the audit we discussed in detail exactly how the response came about and what its consequences might be. And this response basically provided a recommended change to the BWR Owners Group Severe Accident Guideline related to flooding the containment. And it is to try to provide the logical and technical basis for dealing with what might happen if -- how to prevent the water to get into the lower drywell during an accident management procedure and instead reflect the fact that if you did do that, you might have steam explosions. So, the recommended

changes to the procedure would be to make sure that you wouldn't turn on drywell sprays, for example, or provide water prematurely.

And so, we looked at that response and had detailed discussions with the person who prepared it, and from that concluded that this particular RAI would be closed, and so it's no longer an open item.

The second one that we focused on -- we did a lot more than just dealing with these two open items. We looked through their entire Level 2 PRA for Rev 4, or at least the draft version that existed at the time. There weren't any significant changes from what we saw previously, so there's not much to talk about there.

CONSULTANT WALLIS: Can't water get down there for other reasons than turning on the sprays?

MR. FULLER: I'm sorry?

CONSULTANT WALLIS: Water can drain down into the lower drywell any time water is above it, so it's not just --

MR. FULLER: Well, you know, if there's water beforehand, there's not much that they can do about it.

CONSULTANT WALLIS: Oh.

MR. FULLER: And the Chapter 21 of the PRA

basically concludes that if you have to deal with steam explosions and if the pool depth is one-and-a-half meters or higher, they just assume you have a large release. And so, you know, that's the way it is for scenarios like that.

CHAIRMAN CORRADINI: So I guess to answer Graham's question differently, a way to get at your point is that due to operational events there would not be anything like a meter-and-a-half of water down there?

MR. FULLER: I wouldn't think so.

CHAIRMAN CORRADINI: Okay. Fine. That's what I --

MR. FULLER: If you had some kind of a LOCA that put a lot of water down there and it's there by the time the vessel fails, there's not a lot you can --

CHAIRMAN CORRADINI: No, no, that I understand, and you've answered that question. But in terms other operational things, there's no chance. Okay. So the assumption is if I have a LOCA and I have essentially it flow past the skirt and down, any sort of core melt accident at that point will go right to a large release?

MR. FULLER: Yes, and in the PRA it's --

yes, it's assumed that. It's a very low frequency, but that's what's assumed.

CHAIRMAN CORRADINI: Okay.

MEMBER ARMIJO: I'm trying to catch up on the protective layer material on the BiMAC.

MR. FULLER: I haven't got to that yet.

MEMBER ARMIJO: You're going to get to that and describe what it is?

MR. FULLER: I'm coming to that, yes.

MEMBER ARMIJO: Okay. Was there a handout? No, no handout.

MS. CUBBAGE: He's speaking to something --

MR. FULLER: There was no handout on the accident management.

MEMBER ARMIJO: Okay.

MR. FULLER: But I just gave you, for the record, the RAI response number so you can look it over.

My rationale here was you didn't seem to express much interest last year in the open issue pertaining to accident management, so I thought I would talk about it today, but not necessarily go into a lot of detail.

MS. CUBBAGE: Ed, excuse me, just for the

record, which RAI number is it?

MR. FULLER: It's RAI No. 19.2.4-1 under the old numbering system.

MS. CUBBAGE: Right. Okay. And then I believe is there a discussion of this in the audit report?

MR. FULLER: Yes, there is.

MS. CUBBAGE: Okay. So the Committee has the audit report.

MR. FULLER: I should add to close that accident management, we asked that an additional RAI related to accident management but in the context of Chapter 18 review. We wanted to make sure that the technical basis for severe accident management is basically something that the COL applicant has to deal with, and so we had them revise the ITAAC on this for Chapter 18 in Tier 1.

Okay. During the audit, as Mark mentioned, we discovered that they weren't going to use Zirconia anymore for the sacrificial material. Instead they were just going to use some concrete. And so what we needed to know then is what's the effect of containment on containment performance from using that kind of sacrificial material instead. So we asked the question and they responded. And what I

want to do today is talk about that a little bit.

We asked them to do an analysis basically of all the representative accident scenarios used for the PRA large release frequency determination. We wanted to know what the effect would be on PCCS performance in containment failure, time and fission product releases. We're interested in PCCS performance to see if the pressures would change as a result of degrade performance from aerosols and gases getting up there. And we also wanted to know what the change in containment failure times might be for these scenarios if you have all this gas products, non-condensable gas products from core concrete interaction. And we were interested in fission product releases from the standpoint of evaluating the severe accident mitigation design alternatives and whether or not high releases might lead to different conclusions regarding whether or not some of these features might be cost beneficial. So those are the motivations for asking the questions.

I'll come back to this later, but first I want to talk about the BiMAC performance open item that we talked about last year. You expressed a lot of concerns about the scaling in the BiMAC test program, as well as possible flow instabilities and

how they may or may not have been measured properly in the test. So we asked the follow-up question to our original question to ask specifically about these issues. That's 19.2-104, Supplement 1, RAI.

They gave a fairly detailed response and this response was subsequent to a couple of conference calls that we, our technical experts on this issue, and GE and their technical experts participated in so that they clearly understood what we were asking. And in the explanation of the scaling laws, they reiterated that they looked at a fairly large scale and it showed there were large margins to burnout. Similarly, the flow instabilities were not expected at all in the regimes of interest. And we believe at this point, and our experts believe that these explanations are reasonable.

MEMBER BANERJEE: How did they show that?

MR. FULLER: I'm not an expert, sir, but you can read the RAI response.

MEMBER BANERJEE: Yes, but can you give it in a gist? Can you give us the gist of the response, or somebody?

MR. FULLER: Yes, okay. Hold on. I will do a little bit of that.

CHAIRMAN CORRADINI: So, the staff

reviewed the response. Did you have any contractors assisting you in that?

MR. FULLER: Yes, that's my point. We had, let's see -- my mind is going blank here. Dr. Moshen Khatib-Rahbar was the principal contractor.

CHAIRMAN CORRADINI: Okay.

MR. FULLER: But he used Professor Ishi if Purdue. And he also used Dr. Kress from Tennessee.

CHAIRMAN CORRADINI: So we can have points of information to Dr. Kress?

CONSULTANT KRESS: Yes indeed.

CHAIRMAN CORRADINI: Yes indeed. Okay.

MR. FULLER: I don't if he would talk specifically about this particular RAI response, but --

CHAIRMAN CORRADINI: Okay. But ERI was the contractor that helped you analyze the response?

MR. FULLER: That's correct.

CHAIRMAN CORRADINI: Okay. Thank you.

MR. FULLER: And they're not here today.

CHAIRMAN CORRADINI: That's fine.

MEMBER BANERJEE: But what the gist of the -- or is there somebody in GE can explain it? How do you prove a scaling law without these conditions? It seems very difficult to me. Was it by some form of

analysis or experiment, or what was it?

MR. FULLER: They did both.

MS. CUBBAGE: I'd also just like to remind everyone that that RAI response is proprietary and we're in open session, so just be mindful of how you respond.

MR. FULLER: That's true. We cannot discuss details of this RAI response here.

CHAIRMAN CORRADINI: Okay. So let me ask a different question that we asked originally that I thought we got an answer which is going to keep me quiet. That is, if there were no BiMAC and I simply had concrete, my understanding was that the performance essentially meets the -- I'm going to get it wrong, but the time delay required to some sort of action before I'd have containment failure; that is, where it's on the order of days. The presence of the BiMAC is defense in depth. The presence of the BiMAC is not to essentially meet this requirement.

MR. FULLER: I believe that's true. We did ask a question a long time ago to that effect assign them for an analysis of what would happen if there were not BiMAC.

CHAIRMAN CORRADINI: Right.

MR. FULLER: And the containment failure

times were depending on the type of concrete.

CHAIRMAN CORRADINI: Right.

MR. FULLER: Twenty-four hours or so, or more.

CHAIRMAN CORRADINI: Which is the longstanding requirement for them on the standpoint of severe accidents?

MR. FULLER: Right.

CHAIRMAN CORRADINI: Okay. And so I'll turn to GEH. Is that correct from your analysis? Because that was a key thing, at least from our standpoint. We had Dr. Powers here. We settled him down on the belief that the BiMAC didn't make it worse. It only made it potentially better with some failure probability.

MR. WACHOWIAK: That's correct.

CHAIRMAN CORRADINI: Okay.

MR. WACHOWIAK: And yes, that was one of the analyses, I believe, that we used some of the bounding assumptions. One of the issues with not having cooling from the bottom is that nobody's really sure how much water gets to the surface of the corium to cool it. And there are the best estimate models for that and then there are the uncertainties associated with some of the more recent tests that you

don't always get the right configuration to get water ingression. So this analysis that we did used the bounding values for no heat transfer to the upper pools. So we could go 24 hours or it could be nothing. It might not make it through the floor at all.

CHAIRMAN CORRADINI: So I want to make sure I characterize it, then I'll let Sanjoy get back at it. But I want to characterize it from the standpoint that last time we visited this, it was essentially a defense in depth measure and we asked specifically to make sure that it doesn't make it worse. And I can use a BWR at this point. The ABWR essentially has not -- at least the version that was certified has no provision and it essentially meets it based on the 24-hour-plus rule.

MEMBER BANERJEE: So why have it?

MS. CUBBAGE: Well, let me just say that --

CHAIRMAN CORRADINI: Well, it's a defense in depth measure that -- I'm sorry.

MS. CUBBAGE: Oh, I just wanted to also mention that with the passive plant we have the RTNSS policy. And one of the criteria that gets a system classified as RTNSS is the conditional containment

failure probability. And the BiMAC is credited for that, is it not? It's RTNSS.

MR. WACHOWIAK: Yes, it's credited, but only because of the assumption that we made that if the BiMAC wasn't there we're just going to assume the containment fails. If we had a different assumption, then we might not get exactly the -- but that was our assumption and that's okay.

MS. CUBBAGE: But if the BiMAC did not exist, we would need additional analysis --

MR. WACHOWIAK: We would a lot of additional analysis.

MS. CUBBAGE: -- from GE to demonstrate spreading and cooling, which as not been done.

CHAIRMAN CORRADINI: Okay.

MR. WACHOWIAK: They've been done to the extent of answering that RAI. So we answered the fundamentals of that question, but it wasn't something that you would say proves to the point where we could rely on it like they did in the ABWR. The ABWR has an entire section of the report on the coolability, spreadability, all that.

CHAIRMAN CORRADINI: Right.

MR. WACHOWIAK: So we captured the essences of it, but --

MEMBER ARMIJO: I want to get back to this cover material protective layer. In the DCD you state that the intention there is to have a material that's high structural integrity, high resistance to melting and low generation capability for non-condensable gases. And I don't know how garden vanilla concrete meets those goals. So I'd like to hear from GE or the staff on why that has changed, why the design has changed. You know, from a ceramic material like Zirconia or something else.

MR. FULLER: Yes, my response would be I'd have to see what the latest version of the DCD says with respect to that material. Because those criteria are not met by sacrificial concrete. Now, I'll ask Rick.

MR. WACHOWIAK: I think the words that are in there are similar to what that is. And with some designs of sacrificial concrete you could meet that; with others you can't. So it can't be an unspecified, you know, just go pour whatever concrete you find out in the yard out there. It's got to be engineered and there's a requirement that it can't produce more than X-amount of gas, and we've got the requirement for how much that is. So right now, the details of exactly what concrete that is, we're leaving that open. We

know what the acceptance criteria is. It's a certain amount of gas, it's a certain amount of structural capability. And so that's where we are with that right now. We've demonstrated by analysis that as long as we stay in the envelope that we have, then we have some flexibility to go certain kinds of concrete or maybe some kind of composite concrete with some ceramic layer or something else we haven't thought of yet. The idea though is to make sure that we have the ability to put in a design that's economical and that performs all the required functions.

CHAIRMAN CORRADINI: So, let me ask one last question about this. So, given that you have a band -- I'm sorry, did you have a follow-up, Sam?

MEMBER ARMIJO: Yes.

CHAIRMAN CORRADINI: I'm sorry.

MEMBER ARMIJO: I guess other than economics, I guess I don't understand why you took away a refractory material like Zirconia, or maybe there could be others, and went to concrete even though, you know, some concretes are better than other concretes; I don't object, I don't disagree with that. But was there anything fundamentally wrong with the Zirconia protective layer?

MR. WACHOWIAK: The main thing that we

were worried at this point was exactly how you would construct it. And we wanted to give flexibility to make sure that we could actually build it when we get it there. So we didn't take away the ceramic material. We just didn't require it to be a solid piece of ceramic material. So we looked at what the properties needed to be and we specified what the properties need to be. So we're not specifying a particular material anymore.

MEMBER ARMIJO: So when will you know how the BiMAC is going to be constructed, what materials are going to be used and, you know, what their properties are going to be.

CHAIRMAN CORRADINI: Well, I think what he just said; you've got to help me here.

MEMBER ARMIJO: Right.

CHAIRMAN CORRADINI: I think what he just said is they're leaving it for a wide range. Is the reference COL going to be the one that specifies it and then it's up to all subsequent plants to decide whether they're going to use those materials versus another set of materials that meet the requirements? Is that how you're answering this question?

MR. WACHOWIAK: I'm not sure that that detail makes it into a COLA, however the plant will

have to have that when they go to construct. And it would be my anticipation that, like many other things that we have, that we would come up with a solution the reference plant would use and that would be replicated. That would be my expectation.

CHAIRMAN CORRADINI: Is this a construction information item? Where does this sit relative to this detail that Sam's asking about?

MR. WACHOWIAK: I'm going to have to look to see if it's in ITAAC. I know we talked about that at one point, but the way it would be constructed, the way that the ITAAC would have been worded; and I'll check to see if we have it there, that we would check the properties of what's there, not saying what it is. So you would have to do an inspection of what's there, the as-built, what is there, and then you do an analysis to ensure that it meets all the properties that we have.

CHAIRMAN CORRADINI: Okay.

MR. WACHOWIAK: I'll check that.

CHAIRMAN CORRADINI: That's fine. But does that help you?

MEMBER ARMIJO: Yes, Well, it's very general. I guess I really don't know what the BiMAC -- you're trying to buy time, right? That's all

you're trying to -- you're trying to create a time delay by virtue of this cover material?

MR. FULLER: There is an ITAAC here.

MEMBER ARMIJO: And what do you do to prove that whatever material it is, whether it's concrete or ceramic, how do you prove that you've bought the time that you want?

CHAIRMAN CORRADINI: So that's the way to ask the question to GEH. Is that what the purpose of this is?

MR. WACHOWIAK: The main purpose of the material is so that when -- because the BiMAC is dry.

MEMBER ARMIJO: Right.

MR. WACHOWIAK: Right? And when we pour the core down into the lower drywell, there needs to be some time between when the first part of the core gets there and when the pipes are filled with water. And that was one of the subjects of the RAI was there.

MEMBER ARMIJO: Right.

MR. WACHOWIAK: So the function of the sacrificial material is to keep the core away from the BiMAC pipes while we're waiting the whatever, five to ten minutes for the water to get there.

MEMBER ARMIJO: And that's in your DCD, Rick.

MR. WACHOWIAK: Right.

MEMBER ARMIJO: I read that. You know, the material allows adequate but short time period for diagnosing conditions are appropriate for flooding and so on. And it has other criteria. High-structural integrity, high resistance to melting, low generation capability for non-condensable gases. All of those are fine. The question is how do you prove what numerical information do you have to generate to show that you meet these criteria, and will it be in the DCD? Would it be in the R-COLA, or is it something that each ESBWR builder --

MR. FULLER: There are two ITAACs related to this.

MEMBER ARMIJO: Okay.

MR. FULLER: Would you like me to read them to you?

MS. CUBBAGE: Go ahead. Go ahead.

MEMBER ARMIJO: Sure, why not? Just tell me what they say.

MR. FULLER: All right. This, for the record, is in table 2.4.2-3 of Rev 6 of the Tier 1 documentation. And these are Design Commitments 29b and 29e. And the Design Commitment 29b basically says that there will be material on top of the BiMAC pipes

to protect against melt impingement during the core relocation event. And there will be inspections conducted. And the acceptance criteria are the as-built BiMAC would contain a material that would be there to protect the pipes.

Then 29e is more to the point here of what we're discussing. This material does not generate non-condensable gases in quantities that would result in exceeding the containment ultimate pressure. There won't be any inspections of this as-built system, but the reports would exist and conclude that this material would be such that the non-condensable gas generated would not be in sufficient quantities to exceed the containment ultimate pressure.

MEMBER ARMIJO: Right.

MR. FULLER: So that's in the Tier 1.

MEMBER ARMIJO: So it's going to be really good material, that's all I heard.

MR. FULLER: Well, yes.

MEMBER ARMIJO: But it's nothing quantitative.

MR. FULLER: No, it's not.

MS. CUBBAGE: I think the point is that we need to have confidence that they're going to be able to have a material that's going to meet those

properties, but we don't necessarily have to know what the material is. I mean, that's where this --

MEMBER ARMIJO: There has to be something quantitative that you compare the performance of this --

MR. FULLER: That's correct.

MEMBER ARMIJO: Where is the quantitative requirement?

MR. FULLER: Well basically, the way I would look at it is when you model whatever the actual concrete material is and you put it into the analysis tool that they might be using, whether it's MAAP or MELCOR, or whatever, if it doesn't predict that you'd fail a containment by over pressure within -- ever, okay, then you're okay.

MR. WACHOWIAK: So as an example, in that RAI response we picked a concrete material that's currently used for nuclear power plant applications and I believe it's probably the same material that's used in the ABWR floor.

MEMBER ARMIJO: So this is sort of like the high-silica-type concretes?

MR. WACHOWIAK: Right. So we did in the RAI response an analysis with that concrete and demonstrated that that would work. Now, we're not

saying that it's the only one that would work, but we do have one that's available now that does work. So it gives them the confidence that yes if they agree to these properties, there is something that can be built, because we've demonstrated it by analysis with something that's available now.

CHAIRMAN CORRADINI: That's why I referenced back to the ABWR, because I think that's what the RAI response focused on.

MEMBER BANERJEE: Are there features in this design so different from an ABWR that you have to go to the BiMAC?

MR. WACHOWIAK: Yes, the application for certification happened in 2004 rather than 1995.

MEMBER ARMIJO: The rules changed.

MEMBER BANERJEE: So what was the specific requirement?

MR. WACHOWIAK: There is no specific requirement, however, and I know it's getting a little facetious with that, but the what happened there were experiments that happened between when the ABWR was submitted and when the ESBWR was submitted that indicate there are uncertainties that were previously not accounted for. So they're not saying that the ABWR is invalid. They're saying that there are some

uncertainties in whether the material is coolable from the top. So what we did was, we said since we'll never be able to by analysis show that those uncertainties don't exist, we will put in a BiMAC for defense in depth. It's expected that we're not going to have very much concrete erosion as long as we get a pool of water down there. However, we can't prove it by analysis right now. So we had to do something and the something was the BiMAC. And what we're trying to show right now is (1) that we have a high confidence that it's going to work, and (2) that it doesn't make things worse.

MEMBER BANERJEE: And the scaling arises because you've done tests with the BiMAC?

MR. WACHOWIAK: Yes. We've done scale tests and a full-scale single-tube test, electrically heated the BiMAC.

MEMBER BANERJEE: So you've calculated a temperature field and then you tried to fill it and seen whether that fills or not?

MR. FULLER: You could probably drive over there and see the facility. It's Theophanus' facility.

MEMBER BANERJEE: Where is it?

MR. FULLER: UC Santa Barbara.

MEMBER BANERJEE: That's where I come from.

MR. FULLER: That's why I said that.

MEMBER BANERJEE: Well, I used to. Right. All right.

MEMBER ABDEL-KHALIK: How would you scale the flowing stability test with a single-tube experiment?

MR. FULLER: I think that was the multiple-tube test, wasn't it?

MR. WACHOWIAK: There were two tests. One was a single-tube, full-size single tube, and the other was a half-size quarter floor of the BiMAC. So it was a quarter of a section. So there was a multiple-tube test done.

CHAIRMAN CORRADINI: Let me ask a different question just to make sure I get the bounding question right. Are we allowed to speak in open session about the thickness of the basemat layer?

MR. WACHOWIAK: The thickness of the basemat? Underneath the BiMAC?

CHAIRMAN CORRADINI: Yes. Are we talking, what, two meters?

MR. WACHOWIAK: Yes, I think that's in the DCD. Yes, that sounds right.

CHAIRMAN CORRADINI: Something on the order of two meters?

MR. WACHOWIAK: Or more.

CHAIRMAN CORRADINI: Okay. Fine. And the BiMAC itself, before we get to the tubes, are we allowed to talk about that in open session?

MR. WACHOWIAK: No.

CHAIRMAN CORRADINI: Okay. But it's less than two meters?

MS. CUBBAGE: We are going to go into closed session for HFE. If we need to, we could go to closed --

CHAIRMAN CORRADINI: Yes, let's go back to that. Because I guess I want to just make a point to Sanjoy. I guess I'm still back to at the reason I'm being quiet about this is I really do think they've essentially bounded it from the standpoint of compared to the previous certification.

MEMBER BANERJEE: Why don't we take this up -- when is the closed session?

CHAIRMAN CORRADINI: After lunch.

MS. CUBBAGE: But as soon as possible.

CHAIRMAN CORRADINI: Or sooner. We'll come back to it, yes.

MEMBER BANERJEE: Let's revisit it.

CHAIRMAN CORRADINI: Yes. Okay.

MEMBER BANERJEE: Yes, we just, you know --

CHAIRMAN CORRADINI: Yes.

MR. FULLER: Okay. Well, this is interesting because my somewhat structured presentation got morphed into a general discussion of both the --

MEMBER BANERJEE: A severe accident.

MR. FULLER: -- BiMAC performance issue and the containment performance issue.

CHAIRMAN CORRADINI: Well, feel free to get us back on track quickly.

MR. FULLER: But I thought it was a very useful discussion.

MS. CUBBAGE: I think we've actually covered a lot of what's on your slide, so let's see if there's anything we haven't covered.

MR. FULLER: Let's go to 17 then, slide 17.

When GEH did their analysis they used the MAAP code and there were 15 scenarios that they used, which I guess characterize all of their -- what's your phrase for the N states that --

MR. WACHOWIAK: Non-tech spec leakage

release states.

MR. FULLER: Yes, those various states get all addressed in there.

For most of the sequences the PCCS performance was unaffected because it wasn't really part of the scenario. But for one case they showed that the heat removal from the PCCS was depressed somewhat and as result the containment pressure would be a little bit higher.

Generally speaking, if you looked at the overall results for all of the scenarios, there were some small changes in the times to containment failure relative to if you had the old ceramic material. The fission product releases would be slightly higher as a result of the MCCI releases. And we evaluated those releases and convinced ourselves pretty readily that there wouldn't be any impact on severe accident mitigation design alternatives. So we basically accept this analysis.

CHAIRMAN CORRADINI: So let me add one other --

MR. FULLER: It's not an open item anymore.

CHAIRMAN CORRADINI: I'm sorry. Okay. I have one last question that maybe we can say in open

session. So when ERI, when you're contractor looked at this int he past, since I'm aware of for other certifications, past certifications, there's always been some sort of judgment on relative chance of this retention system not functioning. Did they come to any conclusion in doing sensitivities on essentially the chance that this wouldn't function?

MR. FULLER: Are we talking about the BiMAC itself?

CHAIRMAN CORRADINI: Yes. For the AP1000 such an analysis was done by the contractor, and I'm curious if they did a similar analysis here.

MR. FULLER: Well, I am not exactly sure. I was the person that asked the RAI on what happened if it didn't function.

CHAIRMAN CORRADINI: Okay.

MR. FULLER: And we got the answers.

CHAIRMAN CORRADINI: Okay.

MR. FULLER: Now the confirmatory assessment was done several years ago.

CHAIRMAN CORRADINI: Yes.

MR. FULLER: Even before I became a member of the NRC staff. And I'm not exactly sure if there were some cases that they ran with MELCOR where they assumed it didn't function or not. And unfortunately,

the person from the Office of Research who managed that project isn't here to --

CHAIRMAN CORRADINI: Hussein Esmaili?

MR. FULLER: I don't think he did. Yes, maybe it was Hussein Esmaili.

CHAIRMAN CORRADINI: Okay.

MR. FULLER: Yes.

CHAIRMAN CORRADINI: Well, we can take it as an item as to come back to then.

CONSULTANT WALLIS: When we heard about the BiMAC first, it seems to me, some time ago, we were told it was the design specification, that it should work 99 percent of the time, or there was some number given to it. Is that still --

MR. WACHOWIAK: What we concluded following the test that we did was that the dominant failure mode was going to be in the valves and in the control system that we would use to get the water to the BiMAC, and the BiMAC functioning itself would be less than that. And so originally we had specified that it needed to work with the reliability of better than ten to the minus three, I think was the number that we had in the older version of the PRA. Later, when we concluded that we knew what the dominant failure modes would be, and that would be the valves

and the control systems, we actually put in a fault tree for the valves and the control systems. So that assumed number I don't believe is in there anymore.

CHAIRMAN CORRADINI: But it's of the order of what for the valves and the control system?

MR. WACHOWIAK: Between ten to the minus three and ten to the minus four, I believe.

CONSULTANT WALLIS: Well, that was what you wanted it to be?

MR. WACHOWIAK: Yes.

CONSULTANT WALLIS: And now you've taken that out?

MR. WACHOWIAK: We had that there. That's what we needed it to be. That's what we wanted it to be. That was our specification. And so we had that as an assumption, as an input value. Once we got to the point where we thought we could conclude that we knew what the failure modes were, we changed to an actual fault tree model given the configuration we had. And then we have a calculated fault tree for that, rather than an assumed input value.

CONSULTANT WALLIS: Now does this tree include an analysis of how this concrete behaves?

MR. WACHOWIAK: No.

MEMBER STETKAR: The fault tree doesn't

evaluate the performance of the BiMAC. the fault tree only evaluates the performance of the deluge.

CONSULTANT WALLIS: Whether or not water comes in?

MR. WACHOWIAK: Right. And that's what we concluded would be the --

CONSULTANT WALLIS: But if the BiMAC doesn't work even if water comes in, that doesn't figure in the PRA somehow?

CHAIRMAN CORRADINI: I think the answer to that is no.

MR. WACHOWIAK: No. They did a bounding analysis --

CONSULTANT WALLIS: -- is irrelevant to the PRA?

MR. WACHOWIAK: We did a set of tests to show that the thermal hydraulic properties of the BiMAC would work with margin, and just like many other structural components in the plant, we don't assume that the buildings fall apart with a probability of X, just to put a number in there. So in this case, we don't believe that it's greater than the probability of having a failure of the valve in the control system.

CONSULTANT WALLIS: Well, that's a poor

analogy. I mean, you don't pour molted core on a building. That's something different.

MR. WACHOWIAK: Well, in the other existing plants, you pour molted core into their containment building and it's not assumed that that immediately fails the containment building. So it's similar. We're considering it more like a passive component and that failure mode isn't factored into the quantitative PRA. We think it's low based on the margins that we have.

CONSULTANT WALLIS: Thank you.

CHAIRMAN CORRADINI: I think you're done.

MR. FULLER: I believe I am done. Thank you very much. I mean, further questions?

CHAIRMAN CORRADINI: I'd like to go into closed session so we can address --

MEMBER STETKAR: Do you want to go into closed session to go to human factors, or do we want to finish some of the PRA?

CHAIRMAN CORRADINI: I'm sorry. Excuse me. I'm sorry, you're right. Rick had some information items to get back to, so let's do that.

MR. WACHOWIAK: Okay.

CHAIRMAN CORRADINI: But don't go anywhere, Ed.

MR. WACHOWIAK: Okay. So the one that I remember; and you'll have to remind me on some of the other ones, the question about the standby liquid control?

MEMBER STETKAR: Yes.

MR. WACHOWIAK: If you look in Chapter 2, the small liquid LOCA is based on three rows in table 2.3-1 H, I1 and I2. The sum of those three are the small liquid LOCA. They comprise the standby liquid control system line, the instrument lines, below TAF and the instrument lines above TAF but below Level 3 in the reactor. And so that factor that was multiplied by the small liquid LOCA is H divided by H plus I1 plus I2.

MEMBER STETKAR: I understand that, but the fact of the matter is that the flag is simply a logical condition. You can't multiply that by -- that initiating event has a frequency percent SL-L.

MR. WACHOWIAK: Right.

MEMBER STETKAR: As a frequency. A unique frequency.

MR. WACHOWIAK: Then the flag isn't set to true or false. It's a conditioning event. It's treated just like a basic event.

MEMBER STETKAR: The flags are? It's a

house event. There's a house event multiplied by a number.

MR. WACHOWIAK: On the picture --

MEMBER STETKAR: I'll get the picture. Maybe we can talk about this during the break, because maybe I'm not understanding how you put that model together.

MR. WACHOWIAK: Yes, no matter how it's drawn on the picture, unless we specifically set it to true or false, it acts like a basic event in the software.

MEMBER STETKAR: But doesn't that basic event have the value associated with the line item of its name, which is the frequency of a standby liquid control injection line break, the thing named percent SL-L?

MR. WACHOWIAK: Percent SL-L is a -- okay. I see the point that you have here, that text in the box says standby liquid control injection line break. Understand that. However, the identifier SL-L is small liquid line LOCA. So the text that's in that box is not representative of what that actual basic event is.

MEMBER STETKAR: Oh.

MR. WACHOWIAK: So I understand your

confusion.

MEMBER BLEY: How would one discern that?

MEMBER ARMIJO: You've got to talk to Rick.

MR. WACHOWIAK: No, in Section 2, which is the initiating event evaluation, it's got a definition of a percent SL-L, and that's where that's described. This is a rendering of the electronic file. That should be fixed.

CHAIRMAN CORRADINI: Okay. Is there another one?

MEMBER STETKAR: Yes.

MR. WACHOWIAK: Go ahead.

MEMBER STETKAR: The first one that I have --

MR. WACHOWIAK: Oh, the --

CHAIRMAN CORRADINI: -- the mapping of the LOCA sequences to the flags in the Level 2 fault tree?

MR. WACHOWIAK: Yes. And in the interstitial time here, I have confirmed that your observation is correct, that in the sequence the flag -- in that section of the fault tree there's a flag that has the wrong sequence. When we were quantifying the Level 2 as we did in Rev 2, where we did the Level 1 separate from the Level 2, and we took the cutsets

from the Level 1 and put them into the Level 2, that made a difference and those flags needed to be set. Since that time, we've changed the way that we do the linking of the Level 1 and the Level 2. Now we actually have a full Level 2 model that goes all the way back to the initiating event and includes all the Level 1 fault trees, the containment event trees, the top logic for the containment event trees on down to the end. And those particular flags are now irrelevant in the Level 2 model.

MEMBER STETKAR: Does that mean that that whole fault tree in Section 8.A is irrelevant?

MR. WACHOWIAK: No, there are other failure modes that are in there that will be picked up under this. It's the failure of the maintenance valves and things like that. Those particular --

MEMBER STETKAR: Those are, because those are basic events.

MR. WACHOWIAK: Those are basic events.

MEMBER STETKAR: Yes.

MR. WACHOWIAK: But these particular --

MEMBER STETKAR: But anything that has to do with any kind of flag now is irrelevant?

MR. WACHOWIAK: No, not with any kind of flag, but those particular flags in Level 2 are not

used to control the way the logic is set up. There are some flags that are in there that are closer to the top of the sequences that help us identify in our analysis of the results which sequence the cutset came from. So the manifestation of what you found would be is that some sequences would end up having two flags that say I came from sequence SL-L 20 and SL-L 21. And then if any of those actually happen to show up in the results, we would look at that and say, oh, there's a problem here and all of that would have gone away. But it looks like none of those made it to the answer.

MEMBER STETKAR: But just relying for something to boil to the surface because it has an unacceptably high number --

MR. WACHOWIAK: No, no, it's not that it's an unacceptably high number. Remember, these flags that you're talking about are not in there to control how the model works. It's to help us identify where the cutset came from when we analyze our results. They're always set to one and they have no impact on what's going on in the model.

MEMBER BLEY: Rick, I'm at a little disadvantage not having this in front of me, but are you saying that the actual hook up of all these trees

is now controlled in a way that's different than the pictures we can see in the --

MR. WACHOWIAK: If you take all of the pictures --

MEMBER BLEY: Yes.

MR. WACHOWIAK: -- and you put them into one CAFTA file and you take all of the event tree pictures that are in ETA, which is part of CAFTA, and tell CAFTA to convert that into a fault tree file and put that in, that is now what the model is. It's a --

MEMBER BLEY: Well, where you used to have house events that switched on and off depending on how you got there, have you pruned the tree for those cases where it's hooked together? I'm a little vague on how --

MR. WACHOWIAK: Yes, there are different types of house events in there. There are some that are used to address certain sequence-specific things that we heard about early, turning on and off service water and things like that.

MEMBER BLEY: So the basic --

MR. WACHOWIAK: So there are some --

MEMBER BLEY: -- before but you're using it in the house events differently than --

MR. WACHOWIAK: There are some that are

used for that purpose.

MEMBER BLEY: Okay.

MR. WACHOWIAK: And there are others that are used just to identify where in the model the cutset came from. And we've demonstrated this with our model, because it's not always the case, but it is the case many times that those types of flags don't affect the outcome of the model. And we've demonstrated to ourselves that these do not by -- well, there's a process you go through for doing that. So those are for information flags, not logic control flags. There are some that are logic control though, and those are described in one of the other sections. There's a very limited number --

MEMBER BLEY: One last simple question from me. And the reason it no longer matters is because you quantitatively tried them and it quantitatively doesn't matter? Because it seems like the logic structure is not quite --

MR. WACHOWIAK: Yes, they're all set to one and they end up being and-ed into various sequences. So they don't affect the numbers on any cutsets. There's a potential that they could effect minimization, but we've tested by leaving them in and then stripping them out. There's a process in CAFTA

you can do with that that the minimization is not affected by the way we have these set up. That's a test that has to be performed. You can't just beforehand decide that.

And so, the way that we used some of those particular flags before was we noted that in those sequences under the gate from BiMAC deluge that there were sequences that we knew that there was no water in a GDCS pool because something was successful in the Level 1. So we tried to identify for those sequences always fail this GDCS pool. That's what the specific logic that he's talking about says. Okay. So now there's those flags in there. They were used for controlling the logic before. Right now they would just be used to identify what sequence it is. However, we note we have explicitly in the model through either a failure gate or under a complement logic gate whether or not the GDCS pools have failed in the past. So by using the failure gates and the complement gates, we know, or the code knows whether or not there's water in the pool.

MEMBER STETKAR: The code knows. Where do we know that? Where is a picture so show that logic? Because the one question that I didn't ask you that I wanted to follow up on, actually I prefaced the first

question saying I stumbled into this LOCA thing. The reason I stumbled into it was I was trying to trace the sequence where I thought that there was no water available in any of the GDCS pools for injection, and the flag logic disabled only pool B/C. The flag logic on that sequence did not affect pool A or pool D for injection. So my question was, was there a systematic disabling of only deluge from B/C and why was that?

MR. WACHOWIAK: That's right.

MEMBER STETKAR: But if you're saying I shouldn't believe the flag logic, then I'm not sure what I should believe.

MR. WACHOWIAK: Yes.

MEMBER STETKAR: Because I'd have the philosophical question, but I'm not sure where I'd go figure out whether it's valid or not.

MR. WACHOWIAK: In the previous revision where we were using that as the interface between Level 1 and Level 2, if you look at those sequences, you'll see that VI --

MEMBER STETKAR: Is successful.

MR. WACHOWIAK: -- is successful, but VL is unsuccessful. So we know that we have some pools that injected and some that did not. And so we made an assumption that the one that did not inject was

B/C, because that had the most effect on the deluge lines.

MEMBER STETKAR: No, I'm sorry. VI is successful and VE is failed?

MR. WACHOWIAK: Right.

MEMBER STETKAR: And VI says success means --

MR. WACHOWIAK: Any pool.

MEMBER STETKAR: Yes, but in the real world, if the plant works like you'd really hope it to work, all of the pools inject most of the time.

MR. WACHOWIAK: That's VE. So if VI is successful and V --

MEMBER STETKAR: No, no, VE is equalizing lines. VE fails if none of the pools injected. You can't of have cutsets that have all three pools injected and have VI success and VE failed if those cutsets exist.

MR. WACHOWIAK: Okay.

MEMBER STETKAR: Because if the equalizing valves all fail due to common cause failure, for example.

MR. WACHOWIAK: Yes, and once again, back in the earlier revs we looked at those sorts of things and there is other logic in there that for the later

long-term injection you had to have different combinations of pools and equalizing lines.

MEMBER STETKAR: That's --

MR. WACHOWIAK: That's still true.

MEMBER STETKAR: That's still true.

MR. WACHOWIAK: So we made an assessment at the time that the cutsets that were coming out of those sequences in general had one pool failed. So we picked a pool. We don't do that now in the Rev 4 model.

MEMBER STETKAR: As I said, the flag was doing that, but if they don't do that now, I'd like to know where a human being can go to indeed confirm this.

CHAIRMAN CORRADINI: Can I interject?

MR. WACHOWIAK: That's the key there, is that I believe that once you've gotten these large models to the point that they're combined into a single fault tree, it becomes more and more difficult for humans to be able to actually walk through that in a --

MEMBER STETKAR: Which is certainly why we can in our scope of -- and in fact should. When I say "we," the ACRS.

MR. WACHOWIAK: Which is why --

MEMBER STETKAR: -- staff in a two-day audit has no prayer of being able to do that either.

MR. WACHOWIAK: Well, but what I believe that Eric showed Mark when he was there was the full integrated model on his computer that had all of the event trees and fault trees and the success gates modeled as not gates and everything else in there. And they may have looked at several sequences and determined that the process itself was robust. Now they may not have hit this particular sequence, but once again, there's thousands of these things in there. You know, it's almost like trying to say, well, did you do an independent calculation on every leg in TRACG to show that you got the safety analysis right? You just can't do that.

MEMBER STETKAR: No, that's true. On the other hand, it's a bit unnerving that somebody who's a part-timer can find, you know --

CHAIRMAN CORRADINI: But a very --

MEMBER STETKAR: But a very clever part-timer. Thank you, but you know, admittedly a part-timer can find pretty quickly one place where the flag logic didn't make sense, but --

MR. WACHOWIAK: But it's not flag logic. It's a sequence marker logic.

CHAIRMAN CORRADINI: Can I interject at this point? So it sounds to me like, unless I'm misinterpreting the conversation, that there's been a revision such that the --

MEMBER STETKAR: Such that I can't find the thing that I was looking for and my concern may not be valid. I'll fully admit that the concern I had from the --

CHAIRMAN CORRADINI: But your point is you can't unwrap it enough to even check it?

MEMBER STETKAR: Without looking at the actual model logic on the computer and tracing it under that logic, a human being apparently can't do that.

MR. WACHOWIAK: Well, it's difficult to do that, because some of the things are drawn in the document in event tree form, but the code knows how to make that translation in its, you know, electronic brain here to get that to work out. And so a human would have to make that same translation and assume that it worked right.

MEMBER STETKAR: I actually did the complement logic on the VI/VE and there is at least one cutset that satisfies that.

CHAIRMAN CORRADINI: Okay. So can we --

MR. WACHOWIAK: But it wasn't the dominant one.

CHAIRMAN CORRADINI: Can we draw this to a close?

MEMBER STETKAR: Yes.

CHAIRMAN CORRADINI: It's okay.

MEMBER STETKAR: I'm done.

CHAIRMAN CORRADINI: Okay.

MR. CARUSO: I would agree that you got to go to Wilmington if you want to see it. My example is, I would have never been able to figure out the feedwater loss of air dealie.

MEMBER STETKAR: It's a valid technical term, Mark.

MR. WACHOWIAK: Analysis technique without sitting there and going through. You know, I think the process of going there and sitting there and doing this stuff gave us enough confidence that, you know, you make the leap and say, okay, you know, I'm not going to be able to see everything and I'm just not going to -- unless I sit here and have this guy walk through it all, and that ain't going to happen.

MEMBER BLEY: Just a little comment from me, and at the end of it I'm going to say; and Mark did the stuff that Rick just talked us through, ring

bells, did you see how this actually worked? But with the first nuclear plant PRA, WASH-1400, they built it all in one fault tree and they had the problem we're discussing right here. Nobody could find anything. Nobody could check it. It took forever to go in and find something as simple as a small LOCA and a failure of high-pressure injection. Norm and Saul invented this event tree/fault tree combination. That made it so you could understand how the model was put together. As we more and more automate, we seem to be going back to the other way. And I was consulting with a particular client a couple years ago where they no longer drew the event trees and fault trees. They just looked at the logic rules. When I started asking questions, he actually drew some out and all of a sudden we found problems that you can only see if you draw them out.

So, Mark, this discussion of where the flags -- what they used to do and now what's happening in the code, did you chase any of those? Did that make sense to you, or is that something you really ought to look at? I'm wondering how you have the confidence that we're a little shaky on right now.

MR. CARUSO: Because I sat there with the guy and --

MEMBER BLEY: And you saw this kind of thing where they used to use flags and now they're --

MR. CARUSO: I heard him say we don't do that. The way it's there, that's not the way it's actually done here. Let's go over here and look.

MR. WACHOWIAK: So, to alleviate some of that concern, because we know that if you just have everything in one big logic file and there's no organization or structure to it, you can't find things. And I think I know which PRA model you're talking about where they did it all in their head for quite awhile. But what we've done though is we do have a structured approach to how we put these together. And we have a set of things within our code, these marker flags that help us find out where things came from. There are also electronic tools now that we can get in and we can say, okay, show me all the paths for this sequence and it will highlight on the screen and do that. So we recognize that. But if we're going to try to make a risk monitor or something with this later, having it all in that one file is a necessary evil.

CHAIRMAN CORRADINI: On that, let's call it into closed session, because we have to do that for human factors and I have one question that involves a

dimension.

Can we go into closed session now?

MS. CUBBAGE: Yes.

CHAIRMAN CORRADINI: Okay. All right. Good. We know what to do. So check your people. Throw out the vagrants, please.

(Whereupon, the open session was adjourned at 11:42 a.m.)

PRA Maintenance In Design Phase

Rick Wachowiak
November 18, 2009
GE Hitachi Nuclear Energy

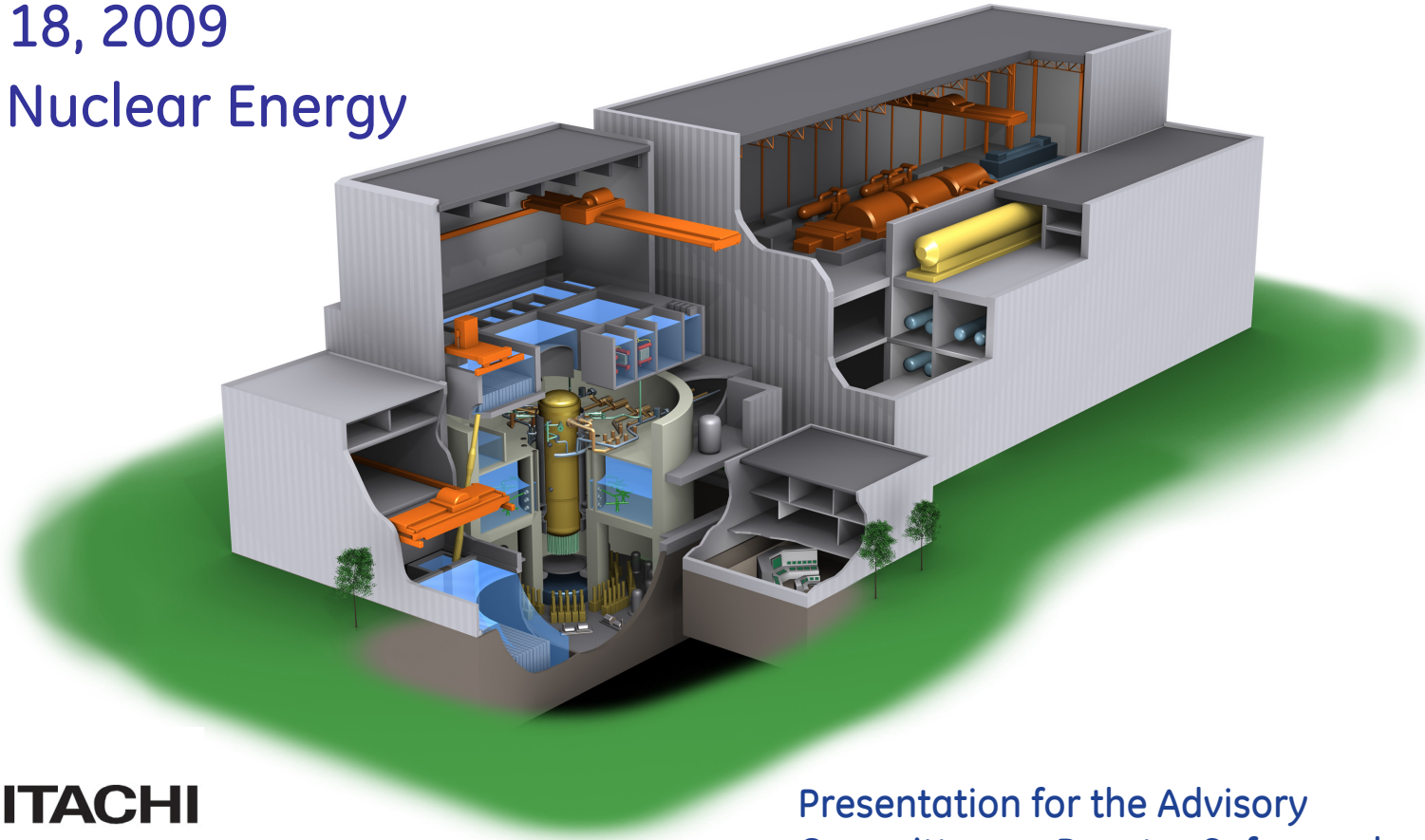

HITACHI

Presentation for the Advisory Committee on Reactor Safeguards

Fundamental Issue

Changes to the configuration of the ESBWR occur during the licensing review

Many stakeholders can be affected by any given change to varying degrees

It is necessary to manage the effects of change

Specific Instance

Change to address DBA could have a large effect on the PRA results

Mainly due to different acceptance criteria

HITACHI

Configuration Changes Rev 5 → Rev 6

29 Change Packages

- 8 Document administrative changes
- 15 Document changes to equipment or operations not modeled in the PRA
- 6 Needed to be reflected in the PRA model
  - 1 Required iteration to preserve PRA results

HITACHI

Change Evaluation Using PRA

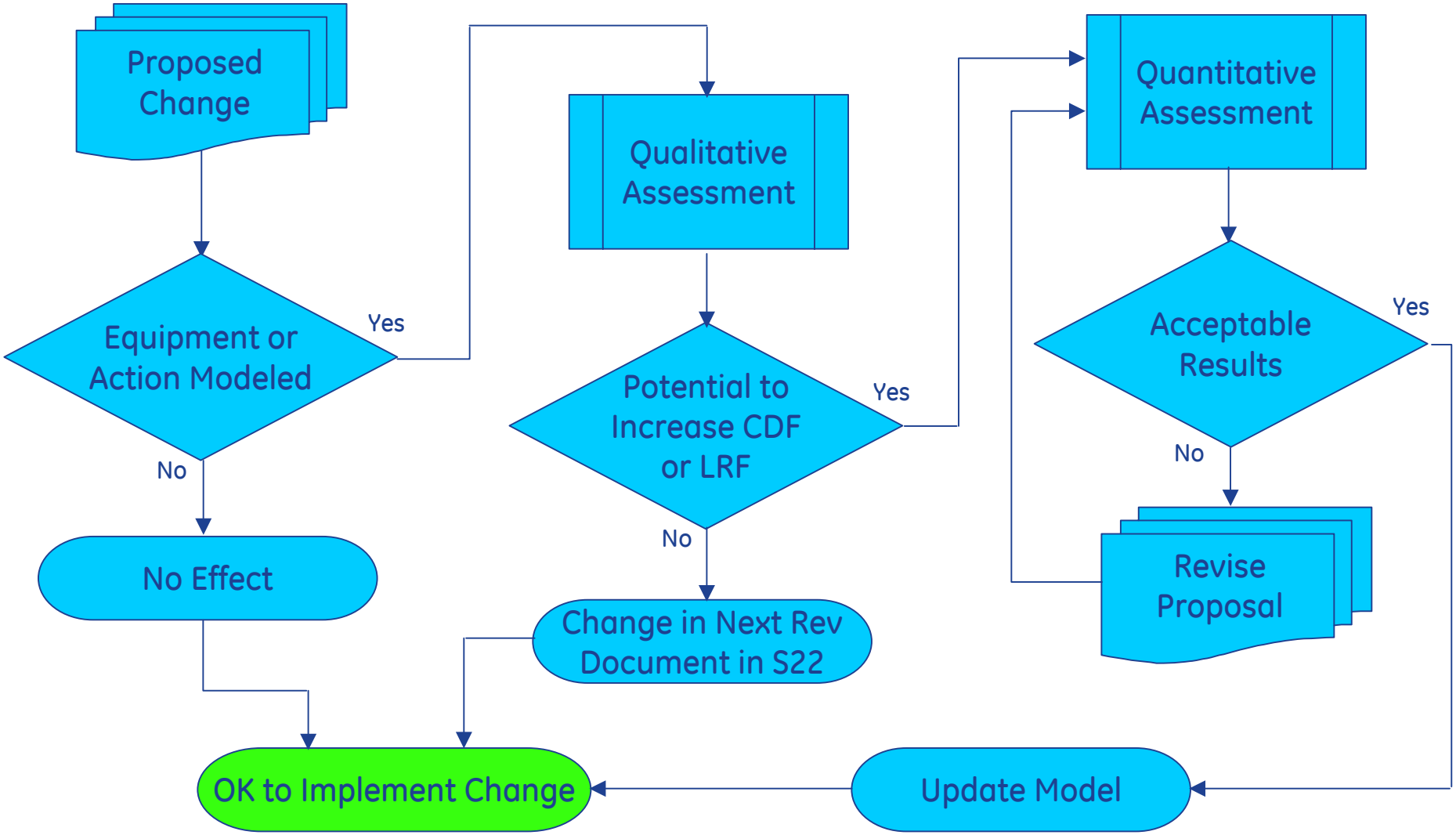

HITACHI

Example - Containment Pressure

Issue: Loss of AC power assumption in DBA may not be conservative with respect to containment pressure

If active injection is available, extra mass and energy can flow into containment

Containment design pressure can be reached within 72 hours unless nonsafety-related active systems are credited

HITACHI

Evaluating Alternatives - Qualitative

Simple Solution
- Terminate active injection
- No affect on Ch 6 analyses

PRA takes credit for active systems

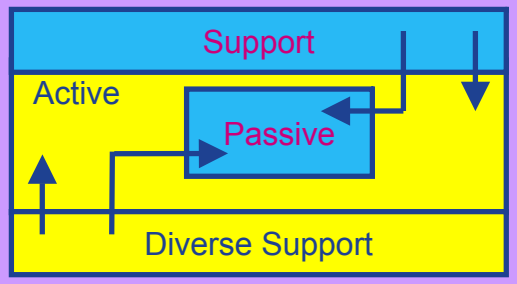

Next Solution
- Isolate active injection
- Credit operator in PRA

Two HP injection systems
- Feedwater
- HP CRD

PRA already includes manual Feedwater

CDF will be affected

Need quantitative model

Determine Constraints

Design Basis LOCA

- Safety-related equipment only
- Single failure
- Non-safety adverse effects
- All parameters at analytical limits
- No operator actions for 72 hours
- DW pressure remain below 45 psig

Digital Controls and Other Issues

- Software based solution requires diverse backup
- Up to 1" LOCA without ECCS actuation

PRA Attributes

- Safety and non-safety equipment
- Best estimate parameters
- One automatic HP injection system
- DW pressure remains below 150 psig
- CDF and LRF values retained

HITACHI

The Solution

Lower initial containment pressure

Raise spill-over hole elevation

Isolate Feedwater on high DW pressure

- Bypass in ATWS and manual inhibit/bypass

Change termination of HP CRD to isolation

- Requires addition of safety-related valves
- Add high DW pressure plus high LDW water signal (can be bypassed)

Bypass HP CRD isolation upon GDCS failure

- Requires addition of nonsafety-related valves and redundant min-flow
- Controls must be safety-related

Add ECCS logic for very-small LOCA

- High DW pressure for 1 hour (can be bypassed)

Control Rod Drive System P&ID

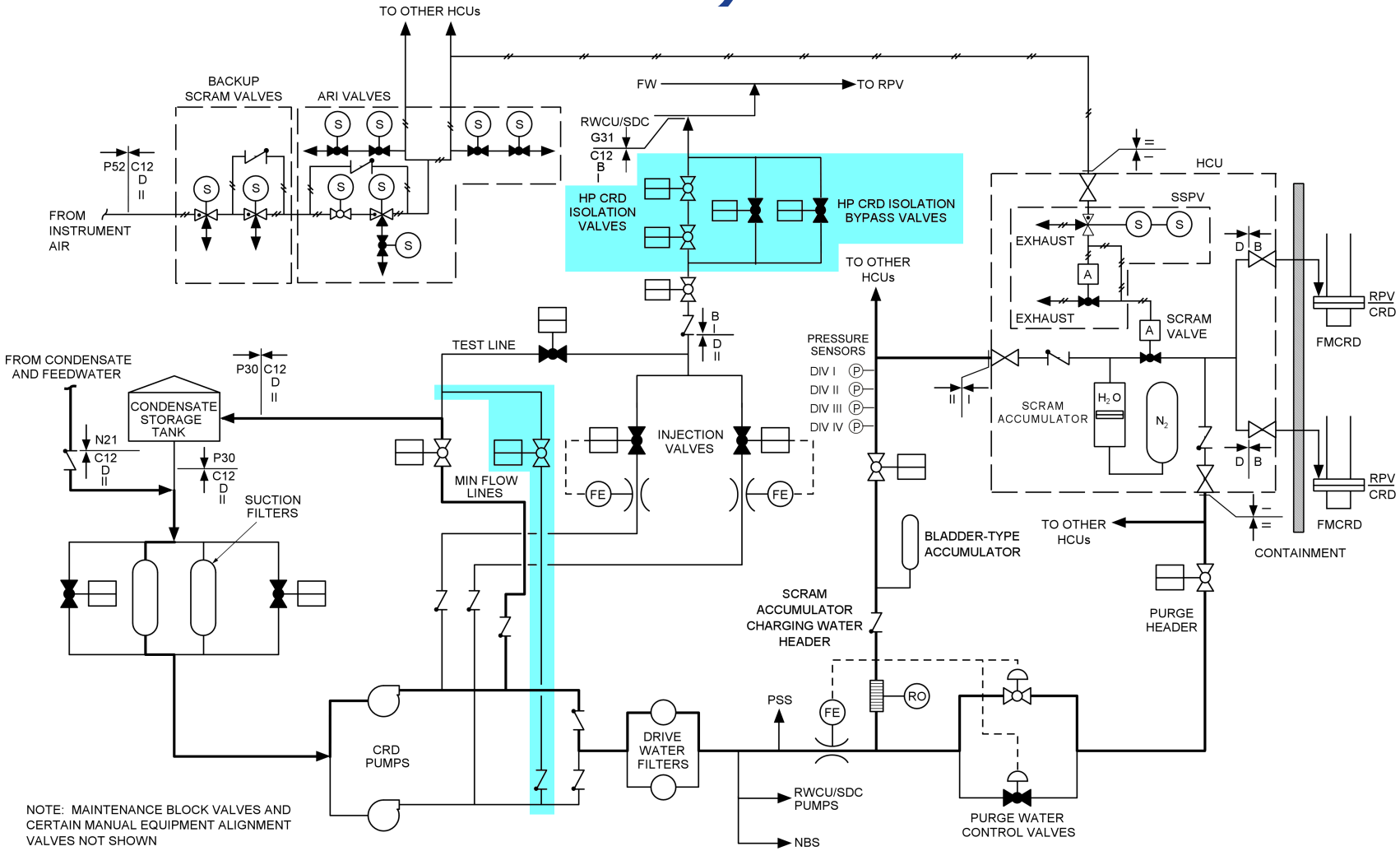

NOTE: MAINTENANCE BLOCK VALVES AND CERTAIN MANUAL EQUIPMENT ALIGNMENT VALVES NOT SHOWN

LEGEND:

A, B, C, D = QUALITY GROUP A, B, C, D
I = SEISMIC CATEGORY I
II = SEISMIC CATEGORY II

HITACHI

The Effects

DBA requirements met with and without AC power available

Risk profile remains virtually unchanged

Operational flexibility retained

Minimized the addition of equipment

Met all high level objectives

Conclusions

Configuration change process includes PRA

Demonstrated several times during certification

Proven to be a fairly efficient process

Even complex issues can be accommodated

HITACHI

United States Nuclear Regulatory Commission

Protecting People and the Environment

Presentation to the ACRS Subcommittee

ESBWR Design Certification Review

Chapter 19

Results of ESBWR PRA Audit and Resolution of Open Items

Presented by

Mark Caruso - NRO/SPRA
Edward Fuller - NRO/SPRA

November 19, 2009

Purpose

- Brief the Subcommittee on the results of the staff's audit of the ESBWR design PRA and resolution of open items

Outline of Presentation

- Background
- Findings from Audit of ESBWR design PRA
- Resolution of Open Items

Background

- Prior Subcommittee briefings June and August 2008
- Full Committee briefed on October 3, 2008
- Interim ACRS letter on Chapters 19 & 22, October 29, 2008
- Staff response to ACRS letter in November 2008
- Staff audited ESBWR design PRA in May 2009
- Audit report issued July 27, 2009
- Rev. 4 of PRA completed in late June 2009

Summary of PRA Audit

- Audit conducted at GEH offices May 6-8, 2009
- 6 NRC technical staff + Project Manager participated
- Draft Rev. 4 of PRA audited
- Audit conducted and report prepared in accordance with NRO Office Instruction NRO-REG-108

PRA Audit Results – High Level

- Information missing from Rev. 3 incorporated in Rev. 4 adequately
- Level 1 modeling concerns resolved
- Several open items resolved in principle and new RAIs issued to complete closure process

Key Audit Topics

- Initiating Events (IE)
  - Process for identifying ESBWR specific IE acceptable
  - Process for accounting for IE in accident sequences
  - Changing category of SLCS injection line break from medium to small LOCA justified adequately

Key Audit Topics (continued)

- Data Analysis
  - Development of component data reviewed, including approach and some basic event data; generic sources--used in many cases--are appropriate
  - Failure data for vacuum breakers, squib valves and digital trip modules reviewed; appear reasonable
  - NEDO-33201, Rev. 4 now includes description of how data values were obtained

Key Audit Topics (continued)

- Accident Sequence Analysis
  - Loss of Feedwater and Inadvertent Relief Valve Opening sequences reviewed
  - Top event structure sound; success/failure logic at branch points sound
- Success Criteria
  - Fire Protection System injection
  - GDCS injection and CRD injection
  - Containment Venting
  - MAAP analyses acceptable in all cases

Key Audit Topics (continued)

- System Modeling
  - Treatment of failure modes considered in self-assessment; appears consistent with ASME Standard
  - GDCS fault tree reviewed; additional failure modes added
  - Test and maintenance unavailability treated with systematic process
- Significant Changes to PRA (Rev. 3 to Rev. 4)
  - Feedwater Isolation
  - Isolation of normal CRD injection flow path
  - Addition of alternate CRD injection
  - BiMAC sacrificial layer material

Key Audit Topics (continued)

- Shutdown Risk Analysis
  - Event trees for loss of level events
  - High winds analysis
- Level 2 PRA and Severe Accidents
  - BiMAC device testing
  - Accident Management

Key Audit Results

- New RAIs stemming from audit
  - Address impact of erosion of sacrificial concrete on containment integrity during representative severe accident scenarios
  - Provide confirmatory information justifying credit for Isolation Condenser in shutdown PRA

Resolution of Open Items

- BiMAC performance
- Effects of products from erosion of sacrificial concrete on containment integrity
  - PCCS performance
  - Containment failure time
  - Fission product releases

BiMAC Performance

- Scaling issues addressed in proprietary response to RAI 19.2-104 S01 in MFN 09-203 (April 3, 2009)
  - Further explanation of scaling laws show large margin to burnout or flow instability for realistic thermal conditions.
  - Comparisons between full-scale and ½-scale tests verify that areas and flows scale by L^2, and the same scaled flow rate is obtained for the same scaled power.
  - The staff accepts the GEH analysis and conclusions.

BiMAC Performance (continued)

- A response to a request for transient analyses of BiMAC behavior was provided in response to RAI 19.2-123 in MFN 08-948, Enclosure 1 (ML083520217).
- GEH concluded that the BiMAC tubes would be filled by water provided by gravity flow from the GDCS pools within a few minutes. This is well before significant tube heatup would occur upon arrival of the ablation front (in about one hour).
- The staff accepts the GEH analysis and conclusions.

Containment Performance

- Containment performance during erosion of sacrificial concrete for representative severe accident scenarios.
  - Sacrificial material covering the BiMAC now expected to be concrete, not Zirconia.
  - GEH responded to RAI 19.2-127 in MFN 09-407 (June 18, 2009) with an analysis of the effects of erosion products (gases and fission products) on containment performance.

Containment Performance (continued)

- MAAP 4.0.6 used for the analysis for 15 scenarios
- For most sequences PCCS performance was unaffected by the MCCI.
  - For one case, PCCS heat removal is depressed and the containment pressure is somewhat higher.
- Small changes in times to containment failure.
- Fission product releases are slightly higher as a result of MCCI.

– The staff accepts the GEH analysis.

Discussion/Committee Questions