Duke Energy®

DAVE BAXTER
Vice President
Oconee Nuclear Station

Duke Energy Corporation
ON01VP/7800 Rochester Highway
Seneca, SC 29672

864-885-4460
864-885-4208 fax
dabaxter@dukeenergy.com

February 29, 2008

U. S. Nuclear Regulatory Commission
Washington, DC 20555-0001

ATTENTION: Document Control Desk

SUBJECT: Duke Power Company LLC d/b/a Duke Energy Carolinas, LLC (Duke)
Oconee Nuclear Station (ONS), Units 1, 2, & 3
Docket Nos. 50-269, 50-270, & 50-287
NRC Generic Letter 2004-02 Supplemental Response

On September 13, 2004, the Nuclear Regulatory Commission (NRC) issued Generic Letter (GL) 2004-02, "Potential Impact of Debris Blockage on Emergency Recirculation During Design Basis Accidents at Pressurized Water Reactors." The GL requested that all pressurized-water reactor (PWR) licensees (1) evaluate the adequacy of the emergency sump recirculation function with respect to potentially adverse effects associated with post-accident debris, and (2) implement any plant modifications determined to be necessary.

By letter dated March 1, 2005, as supplemented by letter dated September 1, 2005, Duke Energy Corporation provided responses to the GL. By letter dated February 9, 2006, the NRC staff determined that additional information was necessary in order for the staff to complete their review of the Duke information. The ONS responses to these requests for additional information (RAIs) are contained in Enclosure 1.

Additionally, by letter dated August 15, 2007, the NRC staff issued the "Content Guide for Generic Letter 2004-02 Supplemental Responses" for the use of PWR licensees in developing their GL 2004-02 responses. This content guide was revised and re-issued on November 21, 2007. The ONS Supplemental Response Content Guide responses are contained in Enclosure 2.

As a part of the verification that licensee's have resolved concerns identified in the GL, the NRC staff conducted sample audits, including an audit conducted on the new sump design and associated analyses and testing for Oconee. From March 26, 2007, through March 29, 2007, NRC performed an on-site audit of ONS' corrective actions for GL 2004-02. By letter dated August 28, 2007, the NRC staff issued their audit report, "Oconee Nuclear Station: Report on Results of Staff Audit of Corrective Actions to Address Generic Letter 2004-02." Eleven "Open Items" were documented in Appendix 1 of the NRC Audit Report. ONS' response to these open items is contained in Enclosure 3.

A116
NRR

During the course of evaluating the adequacy of ONS' Emergency Core Cooling Systems (ECCS) and Building Spray (BS) Systems with respect to Generic Safety Issue 191 (GSI-191), ONS has identified corrective actions necessary to resolve all NRC concerns. Some of those corrective actions were identified as commitments in Duke letter of September 1, 2005. Status update on these commitments was provided by letter of June 28, 2006. Other commitments were identified in ONS' letter of December 19, 2007. Three additional corrective actions have been identified during final reviews of this response that have not been included in previous Duke correspondence to NRC. Those corrective actions are included as additional commitments contained in Enclosure 4.

Duke understands that the NRC staff will consider this additional information and will issue a letter to Duke Energy assessing the overall adequacy of ONS' corrective actions for GL 2004-02.

If there are any questions, please contact Russ Oakley, Oconee Regulatory Compliance, at 864-885-3829.

David A. Baxter, Site Vice President
Oconee Nuclear Station

Enclosures

xc:

Victor M. McCree, Acting Region II Administrator
U.S. Nuclear Regulatory Commission
Sam Nunn Atlanta Federal Center, 23 T85
61 Forsyth St., SW
Atlanta, GA 30303-8931

L. N. Olshan, Senior Project Manager (ONS)
U.S. Nuclear Regulatory Commission
11555 Rockville Pike
Mail Stop 0-8 G9A
Rockville, MD 20852-2738

D. W. Rich
NRC Senior Resident Inspector
Oconee Nuclear Station

David A. Baxter, being duly sworn, states that he is Vice President, Oconee Nuclear Site, Duke Energy Corporation, and affirms that he is the person who subscribed his name to the foregoing and that all the statements and matters set forth herein are true and correct to the best of his knowledge.

David A. Baxter, Vice President
Oconee Nuclear Site

Subscribed and sworn to before me this 29 day of February, 2008.

Notary Public

My Commission Expires:

6-12-2013

bxc:

R. L. Gill (EC05O)
K. L. Ashe (MG01RC)
K. L. Crane (MG01RC)
R. D. Hart (CN01RC)
B. G. Davenport (ON03RC)
J. E. Smith (ON03RC)
R.L. Oakley (ON03RC)
S. G. Benesole (ON03MS)
C. E. Curry (ON03MS)
R. J. Freudenberger (ON01VP)
S. L. Batson (ON01VP)
R. M. Glover (ON01VP)
ONS Master File ON-801.01 (ON03DM)
ELL

Enclosure 1

RAI RESPONSES

GL 2004-02 RAI Questions and ONS Responses

1a. Identify the name and bounding quantity of each insulation material generated by a large-break-loss-of-coolant accident (LBLOCA).

Duke Response:

Reflective Metallic Insulation (RMI): 113,484 sq. ft.

Fiber: 0 cu. ft. from piping insulation
0.75 cu. ft. from nuclear instrumentation jacketing
25 cu. ft. assumed for chemical effects analysis

1b. Include the amount of these materials transported to the containment pool.

Duke Response:

RMI: 85,113 sq. ft. used for downstream effects
85,113 sq ft used for structural analysis
0 sq ft used for head loss testing
Fiber: 0.75 cu. ft. for downstream effects analysis, structural analysis, and head loss testing
25 cu. ft. for chemical effects analysis

Note that the amount of fiber assumed for the chemical effects evaluation was based on the fiber content at the time of initial reactor building debris source assessment. Fiberglass insulation on the 1B, 2B, and 3B Auxiliary Cooler piping accounts for nearly all of the 25 cu. ft. input to the chemical effects evaluation. The 1B, 2B, and 3B Auxiliary Cooler insulation has since been removed. The higher value was considered in the chemical effects evaluation for conservatism.

The amount of RMI assumed in the structural analysis and the downstream effects analysis was based on the Nuclear Energy Institute (NEI) Guidance Report (GR) and the accompanying Safety Evaluation Report (SER), both of which were published as NEI 04-07. Per these guidance documents, 25% of RMI can be assumed to fail in large pieces which will not transport.

1c. State any assumptions used to provide this response.

Duke Response:

The assumptions used to establish the bounding quantities of insulation materials generated by a LBLOCA are:

- RMI Zone Of Influence (ZOI) = 28.6 D
- Fiber ZOI = 28.6 D (conservatively assumed same as RMI)
- Mostly uncompartmentalized containment.
- Protection of piping insulation outside of SG cavities was assumed due to robust barriers.
- Removal of fibrous piping insulation (25 cu. ft. removed from Auxiliary Cooler piping) within the ZOI. This was credited in the head loss analysis but not the chemical effects evaluation.
- No fiber contribution was assumed for insulation outside the ZOI. This insulation is mostly jacketed. Testing was performed to show that this insulation will withstand sprays without decomposition or significant degradation.
- RMI assumed 75% transportable to containment pool for downstream analysis.
- RMI assumed 75% transportable for structural analysis.
- RMI assumed 0% transportable for head loss testing. Testing demonstrated that RMI in the debris mix reduces head loss by acting as a prefilter.

2a. Identify the amounts (ie, surface area) of the following materials that are submerged in the containment pool following a LOCA:

- **Aluminum**
- **Zinc (from galvanized steel and from inorganic zinc coatings)**
- **Copper**
- **Carbon steel not coated**
- **Uncoated concrete**

Duke Response:

Aluminum	2321 ft^2	
Zinc (galvanized steel)	3786 ft^2	
Zinc (inorganic coatings)	120 ft^2	
Copper	Not applicable	(Note 1)
Carbon steel not coated	Not applicable	(Note 2)
Uncoated concrete	0 ft^2	

It should be noted that these submerged amounts are conservatively estimated based on sump pool height and reactor building basement layout showing little or no cable trays and/or ductwork near floor elevation. The amount of submerged un-topcoated / degraded coatings is minimal. Basement coatings below the pool level are epoxy over concrete with little exposed inorganic zinc.

Note 1: As demonstrated in prior testing and based on published data, this material is resistant to corrosion under expected post-accident conditions. This material was not included in the current test program; therefore, plant specific values are not provided. (Reference WCAP 16530-NP, rev. 0)

Note 2: Carbon steel is a metal alloy primarily composed of iron. It was determined that the release rates for iron were relatively small and subsequently ignored in chemical effects precipitation modeling. Therefore, plant specific values are not provided.
(Reference WCAP 16530-NP, rev. 0)

2b. Identify the amounts (ie, surface area) of the following materials that are in the containment spray zone following a LOCA:

- **Aluminum**
- **Zinc (from galvanized steel and from inorganic zinc coatings)**
- **Copper**
- **Carbon steel not coated**
- **Uncoated concrete**

Duke Response:

Aluminum	31200 ft^2	
Zinc (galvanized steel)	75721 ft^2	
Zinc (inorganic coatings)	11975 ft^2	
Copper	Not applicable	(Note 1)
Carbon steel not coated	Not applicable	(Note 2)
Uncoated concrete	11991 ft^2	

Note 1: As demonstrated in prior testing and based on published data, this material is resistant to corrosion under expected post-accident conditions. This material was not included in the current test program; therefore, plant specific values are not provided. (Reference WCAP 16530-NP, rev. 0)

Note 2: Carbon steel is a metal alloy primarily composed of iron. It was determined that the release rates for iron were relatively small and subsequently ignored in chemical effects precipitation modeling. Therefore, plant specific values are not provided. (Reference WCAP 16530-NP, rev. 0)

2c. Compare amounts of these materials in the submerged and spray zones at your plant relative to the scaled amounts of these materials used in the Nuclear Regulatory Commission (NRC) nuclear industry jointly-sponsored Integrated Chemical Effects Tests (ICET) (eg., 5x the amount of uncoated carbon steel assumed for the ICETs).

Duke Response:

ICET Parameter Ratios versus ONS Inventory Ratios

	ONS Values		ICET Values		
Parameter	% Submerged	Ratio of total material to water volume	% Submerged	Ratio of total material to water volume	ICET / ONS Ratio
Aluminum	7.4	0.82 ft^2/ft^3	5	3.5 ft^2/ft^3	4.3
Zinc in galvanized steel	5	2.0 ft^2/ft^3	5	8.0 ft^2/ft^3	4.0
Inorganic Zinc primer coatings	1	0.32 ft^2/ft^3	4	4.6 ft^2/ft^3	14.4
Copper (including Cu-Ni alloys)	Not applicable (See Note 1)	Not applicable (See Note 1)	25	6.0 ft^2/ft^3	Not applicable (See Note 1)
Carbon Steel	Not applicable (See Note 2)	Not applicable (See Note 2)	34	0.15 ft^2/ft^3	Not applicable (See Note 2)
Uncoated concrete (surface)	0	0.32 ft^2/ft^3	34	0.045 ft^2/ft^3	0.14

Note 1: As demonstrated in prior testing and based on published data, this material is resistant to corrosion under expected post-accident conditions. This material was not included in the current test program; therefore, plant specific values are not provided. (Reference WCAP 16530-NP, rev. 0)

Note 2: Carbon steel is a metal alloy primarily composed of iron. It was determined that the release rates for iron were relatively small and subsequently ignored in chemical effects precipitation modeling. Therefore, plant specific values are not provided.
(Reference WCAP 16530-NP, rev. 0)

3a. Identify the amount (surface area) and material (eg., aluminum) for any scaffolding stored in containment.

Duke Response:

As a general rule, scaffolding materials are removed at the end of each outage and are not stored in containment during a run cycle. In the very unusual situation where reasonable compliance with this requirement is not feasible, an engineering evaluation is required to be documented via the station Problem Identification Process (PIP). The engineering review will 1) evaluate if materiel is qualified for seismic interaction, 2) evaluate for potential blockage of fuel transfer canal deep end drains, 3) evaluate for potential blockage of the Reactor Building Emergency Sump (RBES) strainer, 4) evaluate for fire protection requirements, 5) evaluate for hydrogen generation potential.

The ONS site directive for Containment Materiel Control will be revised to require an evaluation of any aluminum scaffolding left in the Reactor Building during the operating cycle for potential chemical effects. This revision will be completed prior to the spring 2008 refueling outage.

3b. Indicate the amount, if any, that would be submerged in the containment pool following a LOCA.

Duke Response:

As stated in the response to RAI Question 3a (above), scaffold material is not typically stored in containment. Therefore, no scaffolding would be submerged in the containment pool following a LOCA.

3c. Clarify if scaffolding material was included in the response to question 2.

Duke Response:

Scaffolding was not included in the response to RAI Question 2. As stated in the response to RAI Questions 3.a & 3.b (above), scaffold material is not typically stored in containment.

4. Provide the type and amount of any metallic paints or non-stainless steel insulation jacketing (not included in the response to question 2) that would be either submerged or subjected to containment spray.

Duke Response:

ONS has no metallic insulation jacketing in containment other than stainless steel.

Based on a review of the results from the Reactor Building Coatings Inspections, the following maximum quantities of these materials would be either sprayed or submerged in the sump pool following a LBLOCA:

- 11,975 sq ft untopcoated inorganic zinc (IOZ)
- 3945 sq ft IOZ with degraded topcoat
- 4500 sq ft high temp aluminum
- 500 sq ft galvanized surfaces

5a. Provide the expected containment pool pH during the emergency core cooling system (ECCS) recirculation mission time following a LOCA at the beginning of the fuel cycle and at the end of the fuel cycle.

Duke Response:

In order to establish the sump pH at a particular time after the LBLOCA event, the addition of water to the sump from the various Emergency Core Cooling System (ECCS) sources must be established. The guidance from NUREG/CR-5950 was followed. Major inputs and assumptions used in the Oconee sump pH calculation are provided in Table 5b-1.

Calculations were performed to examine the effect of beginning of life (BOL) and end of life (EOL) boron and lithium concentrations in the reactor coolant system (RCS). Results show that the lower initial concentration of boric acid in the RCS at EOL core conditions results in higher pH values than the same analysis performed at BOL at 24 hours. Figure 5a-1 shows the time-dependent pH profile calculated based on a normalized temperature of 25 °C at BOL and EOL conditions. Swapover to the recirculation phase was conservatively assumed to occur at 1500 seconds.

The Oconee sump pH analysis shows that by 24 hours all of the water from the RCS, Borated Water Storage Tank (BWST), Core Flood Tanks (CFTs), and ECCS and all of the trisodium phosphate dodecahydrate (TSP-C, $Na_3PO_4\ 12H_2O$) will be in the sump pool. However, nitric acid and hydrochloric acid production due to irradiation of the water/air mixture inside of containment and the electrical cable insulation/jacket material will be a long term contributor to the pH value of the pool water. A sensitivity analysis was performed and showed that when the time range is increased, there is an insignificant change in the sump pool pH beyond 24 hours.

Figure 5a-1
Oconee LBLOCA Sump pH Response

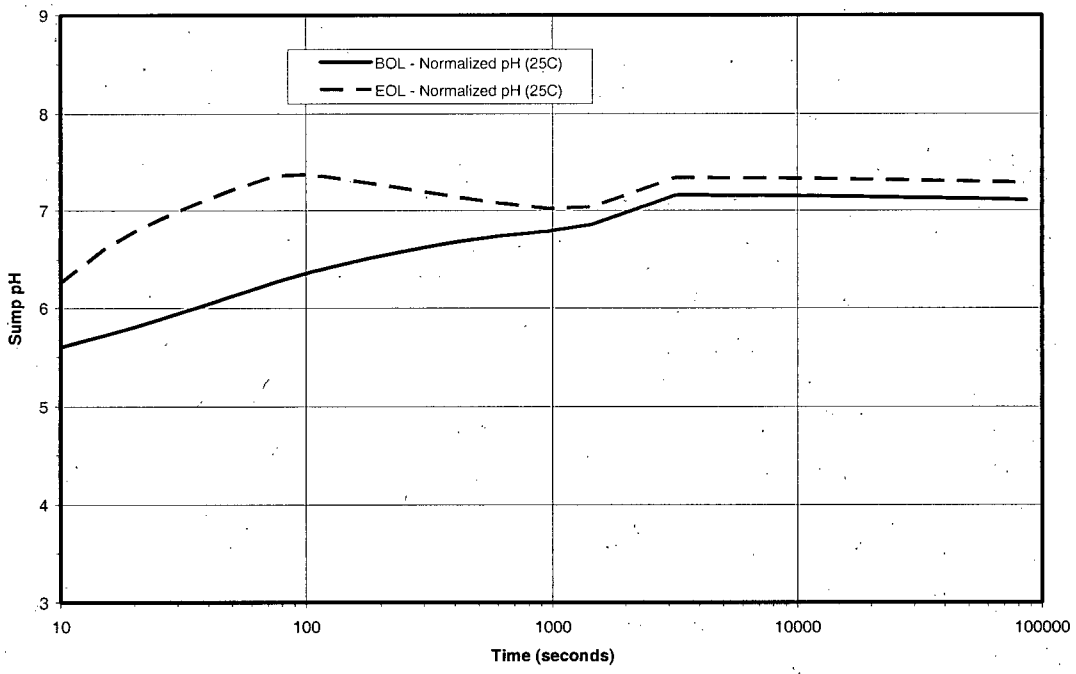

5b. Identify any key assumptions.

Duke Response:

Table 5b-1
Key Assumptions For the Calculation of Post LOCA Containment Sump pH at Oconee Nuclear Station

Description of the Assumption or Input	Value
Reactor coolant volume (cu ft)	12,615
RCS boron concentration (ppm)	3,000 (BOL) / 0 (EOL)
Water volume transferred from the BWST to the sump (cu ft)	39,541
BWST boron concentration (ppm)	3,000
Volume of two CFTs (cu ft)	2,216
CFT boron concentration (ppm)	4,000
TSP-C mass (lbm)	16,000

6a. For the ICET environment that is the most similar to your plant conditions, compare the expected containment pool conditions to the ICET conditions for the following items: boron concentration, buffering agent concentration, and pH.

Duke Response:

ONS has trisodium phosphate (TSP) as the buffering agent and has no calcium silicate insulation. Therefore, the ICET environment that is most similar to ONS is Test #2. A comparison of the expected ONS containment pool conditions and ICET Test #2 conditions is provided in Table 6a-1 below:

Table 6a-1

	Oconee	ICET Test #2
Boron concentration (ppm B)	3044 after 24 minutes equilibrium value (3202 maximum)	2800
pH (25°C)	5.25 to 7.16 ≥ 7 after 35 minutes	7.07 to 7.42
TSP concentration (ppm Na_3PO_4)	2206 after 54 minutes > 1000 after 25 minutes	As required to achieve pH of approximately 7
Temperature (°F)	270 maximum (initial) 185 @ 1440 minutes	140

6b. Identify any other significant differences between the ICET environment and the expected plant-specific environment.

Duke Response:

There are no significant differences between the ICET environment and the expected plant-specific environment other than those listed in Table 6a-1 above.

7a. For a LBLOCA, provide the time until ECCS external recirculation initiation and the associated pool temperature and pool volume.

Duke Response:

In the chemical effects evaluation, the scenario was selected to maximize the reactor building atmosphere temperature. By doing so, corrosion rates and chemical precipitate generation are maximized. For this analysis, the time at which sump recirculation mode is initiated is calculated to be 5466 seconds after onset of the LOCA. The associated sump temperature is calculated to be 231 F, and the pool volume is calculated to be 44,033 cu. ft.

7b. Provide estimated pool temperature and pool volume 24 hours after a LBLOCA.

Duke Response:

For the chemical effects evaluation, the sump temperature 24 hours into the transient is calculated to be 158 F, and the sump volume is calculated to be 43,307 cu. ft.

7c. Identify the assumptions used for these estimates.

Duke Response:

To support the chemical effects evaluation, the LOCA analysis was conducted for a large double-ended break of the cold leg piping in the Reactor Coolant System. The single failure assumed for this analysis was the loss of one 4160v switchgear, resulting in the loss of one train of safeguards for the duration of the transient. Therefore, there is only one train of High Pressure Injection (HPI), one train of Low Pressure Injection (LPI), and one train of Reactor Building Spray (BS) in operation. Also, one of the three Reactor Building Cooling Units (RBCUs) is lost due to this single failure assumption; the remaining two RBCUs are assumed to be operating at the highest fouling level allowed, per their test acceptance criteria. The Low Pressure Service Water (LPSW) temperature is assumed to be 90F, which is a bounding high value. All of these assumptions, as well as others involving initial Reactor Building pressure/temperature, BWST conditions, etc. are intended to maximize the long-term containment atmospheric pressure and temperature. This produces results which are bounding for corrosion rates of metallic materials in containment.

8a. Discuss your overall strategy to evaluate potential chemical effects including demonstrating that, with chemical effects considered, there is sufficient net positive suction head (NPSH) margin available during the ECCS mission time.

Duke Response:

An inventory of wetted metallic constituents was developed and evaluated against the corrosion model presented in WCAP 16530-NP, rev. 0, to determine corrosion rates and types and quantities of precipitates. Additional testing was performed to refine results of the WCAP model, primarily in the area of aluminum alloy corrosion rates. Flow loop testing was performed to determine head loss across the strainer and debris bed with the postulated post-accident debris loading, including chemical precipitates. The flow loop testing confirmed that the debris bed head loss was negligible (approximately 0.014 ft) and would have no effect on available NPSH margin for the ECCS and Containment Spray pumps.

8b. Provide an estimated date with milestones for the completion of all chemical effects evaluations.

Duke Response:

All chemical effects testing is complete for ONS. Evaluation of chemical effects on strainer head loss was completed with integrated head loss testing performed in July 2007. Evaluation of downstream chemical effects was performed using guidance from WCAP 16530-NP, rev. 0, and vessel internals were evaluated using the methodology provided in WCAP 16793-NP, rev. 0.

9. Identify, if applicable, any plans to remove certain materials from the containment building and/or to make a change from the existing chemicals that buffer containment pool pH following a LOCA.

Duke Response:

ONS has no plans for removal of additional materials from containment. All fibrous insulation within the LOCA Zone Of Influence (ZOI) has been removed with the exception of 0.75 cu. ft. associated with the nuclear instrumentation cabling. Likewise, ONS has no plans to change the trisodium phosphate (TSP) buffering agent currently in use.

10a. If bench-top testing is being used to inform plant specific head loss testing, indicate how the bench-top test parameters (e.g., buffering agent concentrations, pH, materials, etc.) compare to your plant conditions.

Duke Response:

Bench top testing was performed to provide precipitate debris loading inputs for subsequent head loss testing. A series of bench top tests were performed to obtain site specific corrosion rates under prototypical accident conditions for pure aluminum (Alloy 1100) and an aluminum alloy (Alloy 3003). Test descriptions are provided in Table 10a-1 below. The pHs and boron concentrations used are very similar to the range of pHs and boron concentration that are projected to be present during various phases of an accident (see response to RAI Question 5). NIUTEC, a subcontractor to CCI AG Switzerland, performed a series of bench top tests to determine if the predicted chemical species were comparable to those given in WCAP 16530-NP, rev. 0. (See response to RAI Question 11e for the evaluation of these bench top tests.)

Table 10a-1
Bench Top Testing Summary

Test Series	Alloy Type/ Boric Acid	pH (adjusted with)	Test Temps.	Purpose
II	Alloy 1100 @ 3040 ppm B	4.4 (None)	200°F 150°F 100°F	Establish short-term (5 hour exposures) corrosion rates for Type 1100 aluminum in ONS ECCS sump chemistry
		6.2 ($Na_3PO_4 \cdot 12H_2O$)		
		7.2 ($Na_3PO_4 \cdot 12H_2O$)		
		7.9 ($Na_3PO_4 \cdot 12H_2O$)		
III	Alloy 3003 @ 3040 ppm B	4.4 (None)	200°F 150°F 100°F	Establish short-term (5 hour exposures) corrosion rates for Type 3003 aluminum in ONS ECCS sump chemistry
		6.2 ($Na_3PO_4 \cdot 12H_2O$)		
		7.2 ($Na_3PO_4 \cdot 12H_2O$)		
		7.9 ($Na_3PO_4 \cdot 12H_2O$)		
IV	Alloys 1100/3003 @ 3040 ppm B	7.2 ($Na_3PO_4 \cdot 12H_2O$)	200°F	Establish corrosion rates for both Type 1100 and 3003 aluminum alloys in ONS ECCS sump chemistry for extended periods and also at slightly higher temperature (Test Series V).
V	Alloys 1100/3003 @ 3040 ppm B	7.2 ($Na_3PO_4 \cdot 12H_2O$)	250°F	

10b. Describe your plans for addressing uncertainties related to head loss from chemical effects including, but not limited to, use of chemical surrogates, scaling of sample size and test durations.

Duke Response:

Flow loop testing has been performed following the CCI testing methodology. This methodology uses the guidance provided in WCAP 16530-NP, rev. 0 for precipitate generation. Chemical precipitates were allowed to form within the testing flume by addition of premixed chemical solutions in lieu of adding the precipitates directly. This method eliminates uncertainties related to the use of an external precipitate generator by allowing better control of chemistry. WCAP 16530-NP, rev. 0, states, "The most critical parameter determined during the testing was the limitation on the degree of concentration of the particulates in the mixing tank." By using the loop as the precipitate generator, the CCI test method simulates the actual plant conditions more accurately when compared with an external generator. Additional uncertainties related to testing have been accounted for by using conservative values for estimating the potential chemical debris loading post-accident. Conservative inputs include, but are not limited to:

- Corrosion rates are based on the most limiting accident for containment atmosphere temperatures. (See response to RAI Question 7).
- Chemical precipitate loading is based on plant specific inputs which were individually selected in a conservative manner.

The chemical additions necessary during the testing were based on the elemental amounts of aluminum, calcium, and silica predicted to be present in the post-accident environment. The elemental amounts were scaled by a ratio of the actual strainer surface area and the test strainer surface area. Based on the scaled elemental quantities, the quantities of solutions were determined.

The test duration for the flow loop testing was approximately three days. Over the three days, additional chemicals, fiber, and particulate were added for conservatism. For each addition, the head loss was allowed to stabilize prior to further debris additions.

As noted above, no chemical surrogates were used in the flow loop tests. The chemical model from WCAP 16530-NP, rev. 0, was used to predict the chemical precipitates and these precipitates were formed in situ during the test.

10c. Discuss how it will be determined that allowances made for chemical effects are conservative.

Duke Response:

See response to RAI Question 10b.

11a. Provide a detailed description of any testing that has been or will be performed as part of a plant-specific chemical effects assessment.

Duke Response:

In July 2007, Oconee performed an integrated head loss test that included paint chips, fibrous debris, and chemical precipitates.

The paint chips were prepared in two size ranges (0.28 – 1 mm and 1 – 4 mm) with the quantity of each size range equivalent to 100% of the particulate debris postulated at the time of the test as adjusted based on results of paint chip transport testing. The 1-4 mm chip size was selected in accordance with SER guidance which requires that licensees assume a paint chip size equal to the strainer hole size for a non-thin bed plant. In addition to the paint chips, a quantity of approximately 10 micron stone flour equivalent to 10% of the postulated particulate debris was added to determine the effect and to increase conservatism in the debris loading.

The fiber used was the actual Owens Corning type that is present in the Oconee containment. The fiber was prepared by cutting approximately 50 mm pieces, baking them to remove any binder, and mechanical separation with the use of a water jet and electric mixer. The mechanical separation and mixing process reduced the characteristic length of the fibers to less than 10 mm. This preparation was necessary since >90% of the fiber postulated in the Oconee containment is from latent debris which is generally in the form of single fibers.

See response for RAI Question 10b for an explanation of the chemical precipitate generation.

The progression of the test was as follows:

- Filled the loop with water and added necessary amount of boric acid solution to achieve approximately 3044 ppm B
- Trisodium phosphate was added to achieve approximately 2206 ppm TSP
- pH was ensured to be within range or adjusted
- Paint chips, stone flour, and fiber was added to the loop
- Chemical solutions were added incrementally and head loss was allowed to stabilize prior to the next addition
- pH was measured and adjusted as necessary after each chemical addition

The following is a list of some conservatisms included within the testing:

- The particulate and fibrous debris was added in front of the strainer to prevent near-field settling.
- Attempts were made to evenly distribute the small amount of fiber across the strainer pockets. These attempts included: slow fiber addition, high dilution volumes for addition, and the inclusion of a vertical plate to induce turbulence and prevent fiber from transporting away from the strainer. In addition to these methods, the test technicians used mechanical means to separate the fibers if agglomeration was identified after fiber addition.
- By using two different paint chip size ranges, with each equivalent to 100% of the postulated debris loading at the time of the test, the test effectively included twice as much particulate loading as necessary. In addition, stone flour was added to determine any effect.
- Debris was allowed to circulate continuously without settling. In actual plant conditions, the debris that passes through the strainer must travel a tortuous path in order to reach the strainer again. This is especially true with paint chips and fiber.
- 100% of the particulate debris was assumed to fail in the same characteristic size as paint chips. This is unrealistically conservative since the particulate constituents would be expected to fail in a variety of sizes, including sizes that would easily pass through the strainer holes and sizes that would not transport given the low flows expected in the containment basement.

11b. Identify the vendor, if applicable, that will be performing the testing.

Duke Response:

Aluminum corrosion testing was performed inhouse at Duke. Other WCAP 16530-NP, rev. 0, bench top testing (as described in the response to RAI Question 10a), in addition to integrated head loss testing, was performed at CCI's manufacturing facility in Switzerland.

11c. Identify the environment (e.g., borated water at pH 9, de-ionized water, tap water) and test temperature for any plant-specific head loss or transport tests.

Duke Response:

The integrated head loss testing was performed using tap water with pH in the range of 7.0-7.2. Calcium precipitate was accounted for in the tests. Water was borated to approximately 3044 ppm B. Test temperature was 70 F - 77 F. Specific transport testing of precipitates was not performed. Rather, the precipitates were formed in the test loop to replicate their formation under post-accident plant conditions.

11d. Discuss how any differences between these test environments and your plant containment pool conditions could affect the behavior of chemical surrogates.

Duke Response:

The most significant difference between the test environment and plant containment pool conditions is the temperature. The predicted aluminum oxyhydroxide is expected to be less soluble at room temperatures than at the higher accident temperatures. Testing was performed at ambient temperatures between 70 F and 77 F, which represents a conservative condition for the precipitation of the chemicals in comparison to post-accident sump temperatures.

11e. Discuss the criteria that will be used to demonstrate that chemical surrogates produced for testing (e.g., head loss, flume) behave in a similar manner physically and chemically as in the ICET environment and plant containment pool environment.

Duke Response:

The results of the tests contained in WCAP 16530-NP, rev. 0, were used as the reference for the physical and chemical behavior of the potential chemical species contained in the containment pool environment and ICET environment. NIUTEC, a subcontractor of the containment sump strainer vendor, CCI AG Switzerland, performed a series of bench top tests to verify that the test protocol used in the CCI multifunctional test loop (MFTL) produced chemical species that were comparable to those tested in WCAP 16530-NP, rev. 0. Tests were performed to determine particle size, filterability and settling rates, among others. The results of these tests are contained in CCI AG report, "Laboratory Bench Test for Chemical Effects Testing", Rev. 0, September 26, 2007. Section 8.3 of the subject report concluded that, "The precipitates of the laboratory bench tests are comparable with similar precipitate according to WCAP 16530-NP, rev. 0. This means that the values of the different parameters lie in the same range."

12a. For your plant-specific environment, provide the maximum projected head loss resulting from chemical effects within the first day following a LOCA.

Duke Response:

For the integrated head loss testing performed at the CCI facilities, maximum values for each debris type were used. The test was allowed to run for approximately 3 days. The debris mix contained the following:

- Fiber quantity equivalent to 132% of the maximum amount postulated post-accident.
- Multiple sizes of paint chips were used to represent the particulate debris with an amount equal to >200% of the maximum postulated amount.
- Chemical precipitates totaling approximately 116% of the maximum amount postulated.

The clean strainer head loss was determined from this testing to be less than 0.01 feet as adjusted to 235.4 F. After addition of the fiber, particulates, and chemicals, the head loss stabilized to approximately 0.014 feet as adjusted to 235.4 F.

12b. For your plant-specific environment, provide the maximum projected head loss resulting from chemical effects during the entire ECCS recirculation mission time.

Duke Response:

The multifunctional test loop (MFTL) integrated head loss test results showed that the head loss stabilized within a few hours and remained at a negligible value. (See response to RAI Question 12a.) Some in industry have postulated that over time the debris bed may compact and cause an increase in head loss. Others have questioned the potential for increase in the bed thickness over time due to erosion of fiberglass. Neither of these phenomena was observed during ONS strainer testing, nor are they expected to occur. The head loss testing suggests that a uniform debris bed was not formed on the strainer based on the very low fiber content and very low head loss observed. Thus debris bed compaction is not an issue for ONS. Additionally, the quantity of fiber used for testing was equal to the total fiber available in containment. Therefore, there is no additional fiber source which might be susceptible to erosion and subsequent deposition upon the strainer surface.

12c. If the response to this question will be based on testing that is either planned or in progress, provide an estimated date for providing this information to the NRC.

Duke Response:

Not applicable. ONS does not plan to perform further testing for head loss or chemical effects.

13. Not Applicable to ONS per NRC RAI letter dated February 9, 2006

14a. Given the results from the ICET #3 tests (Agencywide Document Access and Management System (ADAMS) Accession No. ML053040533) and NRC-sponsored head loss tests (Information Notice 2005-26 and Supplement 1), estimate the concentration of dissolved calcium that would exist in your containment pool from all containment sources (e.g., concrete and materials such as calcium silicate, Marinite™, mineral wool, kaylo) following a LBLOCA.

Duke Response:

Oconee has no calcium silicate insulation in containment, so ICET #2 is more applicable than ICET #3 (see response to RAI Question 6). The WOG Chemical Effects Model described in WCAP 16530-NP, rev. 0, was used to estimate the dissolved calcium that would exist in the ONS containment pool.

The following calcium results were obtained:

a. A total of 14.7 kg of calcium was released over the 30 day evaluation period. Of this amount, 14.5 kg was a result of dissolution of E-glass and 0.2 kg was a result of dissolution of concrete.
b. A total of 37.9 kg of calcium phosphate was precipitated.

14b. Discuss any ramifications related to the evaluation of chemical effects and downstream effects.

Duke Response:

The presence of post-accident debris in containment, including particulate and fibrous debris and chemical precipitates, has been evaluated for its effect on head loss, downstream component wear/plugging, in-vessel plugging, and chemical plate-out on the fuel. Based on the results of the analyses and testing, the effects on head loss, in-vessel plugging, and chemical plate-out on the fuels were found to be insignificant. The downstream effects evaluation for component wear/plugging determined that the following modifications were needed:

- Replacement of the High Pressure Injection, Residual Heat Removal, and Building Spray pump seal flush orifices and cyclone separators due to potential for plugging.
- Replacement of the High Pressure Injection pump internals due to soft, wear-susceptible materials.

15-24. Not Applicable to ONS per NRC RAI letter dated February 9, 2006

25a. Describe how your coatings assessment was used to identify degraded qualified/acceptable coatings.

Duke Response:

A containment coatings condition assessment is conducted during each refueling outage or any other extended outage. The resultant data is used to facilitate proper planning and prioritization of coatings maintenance as needed to maintain the integrity of qualified/acceptable primary containment coating systems.

The containment coating condition assessment protocol consists of a visual inspection of all readily accessible coated areas by qualified personnel. When degraded coatings are identified, the affected areas are documented in accordance with plant procedures.

The guidance provided in ASTM D5163, "Standard Guide for Establishing Procedures to Monitor the Performance of Coating Service Level I Coating Systems in an Operating Nuclear Power Plant" is incorporated in the ONS primary containment coatings condition assessment program. In accordance with ASTM D5163-96 and EPRI TR-109937 (Guidelines on Nuclear Safety Related Coatings) and endorsed by ASTM Committee D-33 (Protective Coating and Lining Work for Power Generation Facilities), visual inspection is the primary coating condition assessment tool employed at ONS.

25b. Describe how your coatings assessment was used to determine the amount of debris that will result from these coatings.

Duke Response:

All degraded coatings identified in the coatings assessment are assumed to become debris that is available for transport to the emergency sump.

All of the testing and analyses performed in support of Generic Letter 04-02 have been based on the maximum containment coatings degradation seen at ONS. In addition, all of the testing and analyses have included margin that can be used in the event additional degradation is discovered.

25c. This should include how the assessment technique(s) demonstrates that qualified/acceptable coatings remain in compliance with plant licensing requirements for design basis accident (DBA) performance.

Duke Response:

The containment coating inspection performed each outage consists of a visual inspection of reactor building coatings. Due to the presence of degraded coatings located in various areas of the ONS reactor buildings, additional testing was selected as 1) a means to more accurately quantify the amount of degraded coating and 2) to ensure the coatings that remain are adequately adhered. Adequate adhesion supports the assumption of proper application, which in turn provides reasonable assurance that the coatings will remain following a design basis accident (LOCA).

The following tests methods were selected and included as part of the reactor building coatings inspection procedure:

Exposed Zinc Primer: ASTM D4752 - Measuring MEK Resistance of Ethyl Silicate Zinc Rich Primers by Solvent Rub. This specific test was selected based on recommendations of the coating manufacturer and our internal technical experts. While it is acknowledged that this test is not a "true" adhesion test, it is an indicator of adequate adhesion (and curing) by nature of the manual abrasion required during performance of this test.

Topcoat with Zinc Primer Base: ASTM D6677-01 - Standard Test Method for Evaluating Adhesion by Knife. This physical test was selected as an adequate indicator of adhesion based on discussions with:

1) The coating manufacturer,
2) An independent technical consultant, and
3) ASTM D-33 Committee (Ref.: Letter dated August 5, 2005 from ASTM to NRC).

Approximately 100 tests have been performed during the last three outages, all by the same inspection teams. Results have indicated:

- General areas of coatings that appear to be visually sound were confirmed to be tightly adhered to the substrate.
- In immediate vicinity of delaminated coating, test results indicated poor adhesion. Given insights from the testing, areas in the immediate vicinity of existing degraded coating are treated as degraded in coating estimates for conservatism.

Oconee was selected as a pilot plant for development of ERPI Report # 1014883 – "Plant Support Engineering: Adhesion Testing of Nuclear Coating Service Level 1 Coatings". These tests concluded that "containment coating monitoring approach contained in ASTM 5163, as implemented by licensees, and endorsed by the USNRC in Regulatory Guide 1.54, Rev 1 and NUREG 1801, Volume 2. Appendix XI.S8, is valid".

In summary, assurance of acceptability is based upon the following elements:

1. Procurement of quality coating materials with appropriate Design Basis Accident (DBA) qualifications.
2. DBA testing shows this coating system, properly applied, will survive post-LOCA containment environment.
3. Safety aspects of coating failures have been addressed consistent with industry knowledge base and plant licensing basis.
4. ONS Testing (ASTM D6677, etc) demonstrates generally sound coatings with good adhesion for original coating system.
5. Operating experience has proven that power tool removal is required to remove sound coating which demonstrates good adhesion for the original coating system.
6. Good adhesion supports an assumption of quality application.
7. Proper application plus DBA testing ensures an acceptable coating.

25d. If current examination techniques cannot demonstrate the coatings' ability to meet plant licensing requirements for DBA performance, licensees should describe an augmented testing and inspection program that provides assurance that the qualified /acceptable coatings continue to meet DBA performance requirements.

Duke Response:

Plans are to continue with visual inspection as augmented by additional testing as necessary. As previously stated, the additional testing (ASTM D6677-01, ASTM D4752) is performed in order to quantify the amount of degraded coating. Inspection team members are typically the same each outage and have gained experience from conducting approximately 100 individual tests. Due to the fact that the tests are destructive in nature and due to the experience gained by inspection team members from prior tests, the tests are not conducted each outage but are performed on an as-need basis as determined by the inspection team.

The current examination techniques, with augmented testing and inspections as described herein, are fully adequate for demonstrating the coatings' ability to meet plant licensing requirements for DBA performance.

25e. Alternately, assume all containment coatings fail and describe the potential for this debris to transport to the sump.

Duke Response:

Not applicable. See response to RAI Question 25d.

26-29. Not Applicable to ONS per NRC RAI letter dated February 9, 2006

30a. The NRC staff's safety evaluation (SE) addresses two distinct scenarios for formation of a fiber bed on the sump screen surface. For a thin bed case, the SE states that all coatings debris should be treated as particulate and assumes 100% transport to the sump screen. For the case in which no thin bed is formed, the staff's SE states that the coatings debris should be sized based on plant-specific analyses for debris generated from within the zone of influence (ZOI) and from outside the ZOI, or that a default chip size equivalent to the area of the sump screen openings should be used (Section 3.3.3.6). Describe how your coatings debris characteristics are modeled to account for your plant-specific fiber bed (i.e. thin bed or no thin bed).

Duke Response:

See response to RAI Question 11a.

30b. If your analysis considers both a thin bed and a non-thin bed case, discuss the coatings debris characteristics assumed for each case.

Duke Response:

See response to RAI Question 11a.

30c. If your analysis deviates from the coatings debris characteristics described in the staff-approved methodology, provide justification to support your assumptions.

Duke Response:

Coating debris characteristics are consistent with the staff-approved methodology.

31. Downstream Effects Review Incomplete and WCAP 16406-P under NRC review. Deferred to audit process and follow-up RAIs.

Duke Response:

NRC review of WCAP 16406-P is complete and rev. 1 of the WCAP was issued for industry use. ONS has completed evaluation of downstream effects. That evaluation is discussed in ONS response to Audit Open Items 5.3-1 and 5.3-2, and in Supplemental Response Content Guide Questions 3.m and 3.n.

32. You stated that the containment walkdown for Unit 2 will be completed in accordance with Nuclear Energy Institute (NEI) 02-01 during the fall 2005 outage. Please discuss the plans to incorporate the results of this future containment walkdown into the sump design analysis.

Duke Response:

Walkdowns have been performed for all three ONS units. In addition, the Baseline Analysis has been updated to incorporate the bounding debris inputs from the unit-specific walkdown results. This effort has produced a bounding debris baseline that has been used to validate and document margin for all of the associated testing and analyses that support the design and implementation of the new emergency sump strainers.

33a. You did not provide information on the details of the break selection, ZOI, and debris characteristic evaluations other than to state that the NEI and SE methodologies were applied. Please provide a description of the methodology applied in these evaluations.

Duke Response:

Break selection was reviewed during NRC audit of ONS GSI-191 activities in the spring of 2007. No open items were identified on this topic during that audit.

Break selection was simplified by assuming the break occurred in the largest RCS piping. The ZOI for RMI (28.6 D) was conservatively applied to all insulation materials, as it is the largest ZOI provided by the industry guidance document (NEI 04-07). For all practical purposes, this ZOI envelopes an entire Steam Generator cavity, so that insulation debris generation was maximized. A 10 D ZOI was utilized for containment coatings as recommended by the guidance document. The centerline of the ZOI was located at a point on the largest RCS piping so that the maximum cavity wall surface area in the steam generator cavity was enveloped.

See response to RAI Question 11 for discussion of debris characteristics.

33b. Include a discussion of the technical justification for deviations from the SE-approved methodology.

Duke Response:

ONS did not deviate from the SE-approved methodology.

34a. Has debris settling upstream of the sump strainer (i.e., the near-field effect) been credited or will it be credited in testing used to support the sizing or analytical design basis of the proposed replacement strainers?

Duke Response:

Settling of fibrous debris, RMI, and paint chips smaller than 75 microns was not credited in any analyses or testing performed for ONS. For head loss testing, settling of paint chips larger than 75 microns was credited based upon transport testing results. Transportable debris was forced (or assisted) to reach the test strainer module during this testing, as described below.

ONS strainer testing was performed in a horizontal test flume. All transportable debris was deposited in the flow stream in the immediate vicinity of the strainer. The quantity of paint chips was adjusted based on the conservative results of paint chip transport testing. Additional debris settling was prevented by the use of a metal plate in the loop that acted to create turbulence and prevent settling. In addition, mechanical means were used to prevent settling.

34b. In the case that settling was credited for either of these purposes, estimate the fraction of debris that settled.

Duke Response:

Based on paint chip transport testing, the following transport fractions were conservatively determined:

- 1 – 4 mm paint chips — 10% transport fraction (90% settling)
- 0.28 – 1 mm paint chips — 25% transport fraction (75% settling)
- 0.075 – 0.28 mm paint chips — 75% transport fraction (25% settling)
- < 0.075 mm paint chips — 100% transport fraction (0% settling)
- Stone flour — 100% transport fraction (0% settling)

As noted in the response to Supplemental Response Content Guide Question/Item 3.f.10, two sizes (or size ranges) of paint chips were assumed to be produced, each in quantities equal to 100% of the total particulate mass generated. Transport fractions were applied to each size range, and the resulting mass of coatings was added to the test flume. This effectively doubled the expected contribution of paint chips (total mass) to the total debris load.

34c. Describe the analyses that were performed to correlate the scaled flow conditions and any surrogate debris in the test flume with the actual flow conditions and debris types in the plant's containment pool.

Duke Response:

Flow conditions and debris loading in the test flume were scaled by the ratio of surface areas of the test strainer module and the installed strainer. This preserves the fluid velocity at the strainer face for head loss testing and reflects a uniform distribution of debris in the containment pool. The following surrogates were used during the testing:

Fiber:
For Oconee, the fibrous debris source term is made up of latent fibers and Nuclear Instrumentation (NI) cable wrap. For both cases, the fibers were simulated by using an Owens Corning type insulation that is used within the Oconee containment on piping outside of the secondary shield wall. This is considered appropriate for latent debris since the insulation is the most likely source of any latent fibers present in containment. The Owens Corning fiberglass is considered bounding for the NI cable wrap since the wrap is not expected to fail as individual fibers. Based on visual observation, the wrap is a woven design that would most probably fail in clumps or pieces. This type of failure would prevent an even distribution of the fiber across the strainer which would lead to open strainer holes. By using the surrogate, a more even distribution could be obtained.

Particulate:
For Oconee, the particulate debris source term is made up of coatings, latent debris, and RTV caulk. Based on the NRC Safety Evaluation Report for NEI 04-07, if a plant cannot substantiate formation of a thin bed the coating debris should be assumed to be a default size equivalent to the size of the sump screen openings. For conservatism, the latent debris and the RTV caulk were also assumed to fail in the same size range as paint chips, and the paint chip transport fractions were also applied to these debris types. This is considered conservative since the latent debris is expected to be smaller than the strainer openings and the RTV caulk is expected to fail in large pieces which would be unlikely to transport. Based on this conservatism, the latent debris and RTV caulking were simulated by the use of paint chips.

It is also worth noting that during the head loss test, an amount of 10 micron stone flour was added equal to 259 pounds of debris in the Oconee containment. This was not meant to simulate a specific debris contribution, only to demonstrate that the fine particles would have no effect on head loss."

Coatings:
Treatment of coatings is discussed in response to Supplemental Response Content Guide Questions/Items 3.h.3 and 3.h.4.

35a. What is the basis for concluding that the refueling cavity drain(s) would not become blocked with debris?

Duke Response:

The refueling canal at ONS contains two 4"drains which join into a single 4" line which is routed to the Reactor Building Normal Sump. These drains are maintained free of large debris during refueling outage by a combination of various activities, including reactor building cleanliness practices, inspections, washdowns, and Foreign Material Exclusion (FME) controls. Materiel controls are implemented on shutdown until Mode 5 and again on startup from Mode 4 to final building closure. These controls include detailed logging of items taken into the Reactor Building, verification of their subsequent removal, or documented justification for leaving any items in the building. Other FME controls are imposed in the Reactor Building in Modes 5, 6, and No Mode. During these times, the Reactor Building is maintained as a "Cleanliness Level 4" area which requires good general housekeeping and cleanliness practices and provides for special signage and boundary markings as well as QC verification of compliance. Prior to filling the fuel transfer canal for fuel movement, the fuel transfer canal walls and floors are pressure washed, followed immediately by a thorough flush of the drain lines. This is immediately followed by installation of strainer baskets to protect the drains during canal fill and draining. Canal fill and drain procedures ensure the strainer baskets are removed following final canal draining. Containment is thoroughly cleaned and inspected prior to entry into Mode 4.

Debris sources generated from a LOCA would include RMI, containment coatings, and latent debris such as tape, tags, and stickers. Since all Reactor Coolant System (RCS) piping is located below the top of the steam generator cavity, any debris generated by an RCS pipe break must pass through the upper grating over the cavity, in order to find a path to the refueling canal. This grating will effectively serve as a sieve. The grating over the cavity has openings of approximately 1" by 4". It is not likely, therefore, that debris of this size could block the canal drain flow. Debris sources above the steam generator cavities include mostly containment coatings and latent dust, dirt, etc. Coatings at this elevation are outside of the ZOI and unlikely to fail in significant quantity. Large paint chips are relatively resistant to transport, making it unlikely that a large chip would reach the drain openings unless falling directly on the drain. Furthermore, failed paint chips tend to be brittle and fragile, and do not have sufficient structural integrity to form a seal over a four-inch diameter opening. Any chips that enter the drains would be expected to be washed easily to the normal sump by spray flow.

35b. What are the potential types and characteristics of debris that could reach these drains?

Duke Response:

See response to RAI Question 35a.

35c. In particular, could large pieces of debris be blown into the upper containment by pipe breaks occurring in the lower containment, and subsequently drop into the cavity?

Duke Response:

See response to RAI Question 35a.

35d. In the case that large pieces of debris could reach the cavity, are trash racks or interceptors present to prevent drain blockage?

Duke Response:

There are no trash racks or interceptors in the refueling canal during power operation. However, as discussed above, the floor grating above the steam generator cavities serves as a trash rack/interceptor, since the path from the break to the refueling canal is entirely encompassed by this grating.

35e. In the case that partial/total blockage of the drains might occur, do water hold-up calculations used in the computation of NPSH margin account for the lost or held-up water resulting from debris blockage?

Duke Response:

A minimal volume of water was calculated to accumulate in the deep end of the refueling canal. This volume was determined by calculating the level required to establish full flow in the canal drains. Friction losses in the drain lines were then calculated to ensure available driving head was sufficient to maintain flow without an increase in level in the refueling canal. No blockage of the drains was assumed in this evaluation. However, there was substantial margin in the analysis, which would offset the effects of partial blockage of the drain lines. For example, less than one foot of friction losses was calculated, compared to an available driving head of about 21 ft. Moderate quantities of debris in these drain lines would be likely to become entrained in the flow path, as velocity in the drain was determined to be more than 2.5 ft/sec. Should small accumulations occur, it is unlikely to create additional friction losses in excess of the 20 ft margin calculated. Furthermore, the amount of water held up in this area (without blockage) was calculated to be 105 cu ft. Even if partial blockage resulted in a ten fold increase in this value, its effect on minimum water level in the sump would be only about 0.1 ft. Such a small decrease in water level and available NPSH would be insignificant with respect to its effect on operation of ECCS and BS pumps in the sump recirculation mode following a LOCA.

36a. Are there any vents or other penetrations through the strainer control surfaces which connect the volume internal to the strainer to the containment atmosphere above the containment minimum water level?

Duke Response:

There is a boron dilution line routed from the hot leg piping to the RBES through the strainer surface on Unit 1. This line would be opened following a LOCA so as to ensure a flow path through the vessel sufficient to prevent excessive boron precipitation in the core. At the time when this line is opened, a potential vent path would exist from the RBES to the RCS pipe break location. No such line exists for Units 2 and 3.

36b. In this case, dependent upon the containment pool height and strainer and sump geometries, the presence of the vent line or penetration could prevent a water seal over the entire strainer surface from ever forming; or else this seal could be lost once the head loss across the debris bed exceeds a certain criterion, such as the submergence depth of the vent line or penetration. According to Appendix A to Regulatory Guide 1.82, Revision 3, without a water seal across the entire strainer surface, the strainer should not be considered to be "fully submerged". Therefore, if applicable, explain what sump strainer failure criteria are being applied for the "vented sump" scenario described above.

Duke Response:

The flange on the boron dilution line through which the LPI pumps take suction is located fully below the reactor building emergency sump walls (elevation 777.0 ft). As the sump fills (with the boron dilution line isolated by 1LP-105), water will enter the boron dilution line (which is at the same atmospheric pressure as the sump pool surface) and assume essentially the same level as in the sump. The minimum water level in the sump is at elevation 781.28 ft, providing a minimum submergence over the flange of greater than 4 ft.

When the boron dilution line is opened, it will have a vent path to the RCS. The line attaches to the RCS hot leg pipe (centerline elevation 809.5 ft). Trapped air will vent to the high point (at the break) and the pipe will begin to fill with water, increasing the level in the pipe as water drains from the RCS. Thus, the minimum level in the pipe will exceed 4 ft as noted above.

The head loss across the strainer surface is extremely small (less than about 0.1 ft). The water column in the boron dilution line in both scenarios described above far exceeds this value. Therefore, the seal will not be lost.

Enclosure 2

SUPPLEMENTAL RESPONSE CONTENT GUIDE RESPONSES

Revised Content Guide for
Generic Letter 2004-02 Supplemental Responses
November 2007

General Guidance

The GL supplemental response should begin with a summary-level description of the approach chosen. This summary should identify key aspects of design modifications, process changes, and supporting analyses that the licensee believes are relevant or important to the NRC staff's verification that corrective actions to address the GL are adequate. The summary should address significant conservatisms and margins that are used to provide high confidence the issue has been addressed even with uncertainties remaining.

Duke Response:

ONS has completed a comprehensive evaluation of the Emergency Core Cooling Systems (ECCS) and Building Spray (BS) system designs to address the GL concerns and ensure compliance with applicable regulations. The general approach taken for this evaluation was to apply the guidance provided by the Nuclear Energy Institute and subsequent NRC Safety Evaluation Report (SER), which were published jointly as NEI 04-07. Additional evaluation guidance subsequently provided to industry in the form of WCAP documents was also followed, including the following:

WCAP 16406-P, rev. 1, Evaluation Of Downstream Sump Debris Effects In Support Of GSI-191

WCAP 16530-NP, rev. 0, Evaluation Of Post-Accident Chemical Effects In Containment Sump Fluids To Support GSI-191

WCAP 16793-NP, rev. 0, Evaluation Of Long-Term Cooling Considering Particulate, Fibrous, And Chemical Debris In The Recirculating Fluid

ONS followed the above guidance without deviation, except in the area of chemical effects. Deviations from the chemical effects guidance provided in WCAP 16530-NP rev. 0 are noted below:

- Precipitates were generated directly in the test loop in lieu of external generation as provided for in the WCAP. This method is more representative of the actual process that would take place in the post-LOCA containment environment.
- Precipitate was allowed to settle in a graduated cylinder versus the use of a centrifuge as per the WCAP. Both measured the precipitation over the same range of time. Settling rates were much higher than the WCAP method because the solutions used by Duke (CCI) contained all chemicals comprising the final test loop solution, so more species of precipitate formed in each solution. WCAP tested solutions containing only one or two types of chemical/material. The Duke method is more representative of actual plant conditions.
- Duke (CCI) measured sodium, calcium, and aluminum concentrations using flame atomic absorption spectroscopy whereas WCAP used Inductively Coupled Plasma (ICP) spectroscopy. Both are acceptable methods for these analyses.
- Duke generated an ONS-specific upper bound aluminum release number/equation based on corrosion tests which showed that aluminum metal/alloy passivates in the presence of phosphate (from trisodium phosphate). This passivation results in a steady-state aluminum concentration that is strongly temperature dependent. For conservatism, the total aluminum release was calculated using worst-case (high) initial containment atmosphere temperature.
- Chemicals were added in a different order than specified in the WCAP. The order was: silica, aluminum, and calcium. The change was made to more closely match the appearance of the chemicals in the reactor building (RB) following a postulated LOCA.

Significant conservatisms and/or margins in these evaluations are noted below. Additional conservatisms are discussed in responses to the detailed questions elsewhere in the Supplemental Response Content Guide (SRCG).

<u>Debris Generation</u>

- Limiting Large Break LOCA assumed with break occurring in largest diameter Reactor Coolant System (RCS) pipe to maximize non-coatings Zone Of Influence (ZOI).
- Break location chosen in the steam generator cavity with the greatest quantity of insulation debris targets to maximize non-coating debris.
- Worst-case debris target destruction pressure was applied to all non-coatings debris to maximize non-coatings debris ZOI (28.6 D).
- Containment coatings ZOI conservatively assumed to be 10 D to maximize generation of coatings debris.

Debris Transport

- Debris transport assumptions were chosen to maximize debris loading on the sump strainer for evaluations where maximum debris quantity was shown to be limiting (e.g., structural evaluation, downstream effects, chemical effects).
- Coatings debris transport testing was performed to substantiate transport of paint chips by size classification.
- In general, settling was not credited where not supported by testing. Reflective Metallic Insulation (RMI) settling was credited for head loss testing because test results showed this to be conservative.
- Tape, tags, and stickers were conservatively assumed to have 100% transport.

Head Loss

- Head loss was evaluated by test in lieu of analysis.
- Flow rates were maximized to worst-case post-LOCA values.
- Debris loading on the strainer was maximized by preventing settling in the test flume. This was accomplished through techniques such as induced turbulence and mechanical agitation.
- Additional coatings debris was introduced into the flow stream over and above that predicted by the debris generation evaluation. Total particulate debris loading tested was approximately 300% of the predicted debris loading.
- RMI was not introduced into the flow stream because test results showed that RMI would decrease head loss across the debris bed.
- Additional particulate debris in the form of stone flour was introduced into the flow stream although not required by the debris generation and transport analyses.
- Minimal strainer head loss (less than 0.1 ft) will have a negligible effect on NPSH margin.

Vortexing

Vortex analysis showed a large margin in required submergence (several times the required submergence) for the strainer at the conservatively assumed flow rates.

Structural Analysis

- Maximum hypothetical earthquake accelerations (0.10 g) used in lieu of design basis earthquake accelerations (0.05 g).
- Differential pressure load based upon 2.0 ft head loss in lieu of 0.014 ft as determined by test.
- Combination of two horizontal acceleration components in lieu of one (as permitted by ONS' license) for Units 2 and 3.
- Maximum hypothetical earthquake results compared to "normal" code allowable stresses.

Downstream Effects

- Conservative debris loading as described above, combined with minimum sump volume to maximize debris concentration.
- Constant debris concentrations assumed for wear models (ignores debris capture by the strainer.
- Debris size conservatively chosen as 110% of the strainer hole size.

Chemical Effects

- Corrosion rates were maximized by assuming worst-case maximum Reactor Building (RB) atmospheric temperatures.
- Precipitation was maximized by assuming minimum containment pool temperatures.
- Concentrations of precipitate-generating chemicals were maximized by assuming minimum post-accident RB water volume.

As a result of these evaluations, a number of follow-on corrective actions were identified. The following list, though not all-inclusive, gives a representative sample of some of the more significant corrective actions taken or to be taken:

- Replacement of Reactor Building Emergency Sump (RBES) screens and trash racks with larger strainers.
- Replacement of seal flush orifices and cyclone separators on the Low Pressure Injection (LPI) Pumps, High Pressure Injection (HPI) Pumps, and Building Spray (BS) Pumps.
- Replacement of HPI Pump 3A to upgrade pump internals for improved wear resistance.
- Removal of fibrous insulation from areas in containment where it would be potentially affected by a pipe break jet (Zone Of Influence or ZOI).
- Enhancement of plant labeling process to limit potential for tags and stickers to become post-accident debris sources.
- Enhancement of plant containment coatings program to ensure that degraded coatings identified from maintenance inspections are evaluated for potential effects on RBES evaluations.
- Enhancement of Foreign Material Exclusion (FME) controls to ensure that any scaffolding remaining in containment during power operation is evaluated for potential chemical effects.
- Enhancement of plant design change process to ensure that plant modifications are evaluated for impact to RBES evaluations performed in support of GSI-191.
- Revision of Technical Specifications to remove reference to trash racks and screens and add reference to strainers.
- Revision of UFSAR to update from 50% blockage criteria to debris-specific RBES evaluation criteria.

Moreover, given the large surface area of the ONS replacement sump strainers and the minimal fibrous debris available for destruction and transport to the strainers, debris blockage of the RBES strainers is highly unlikely. In the holistic sense, considering the conservative and comprehensive evaluations performed, the resulting minimal impact to sump strainer debris bed head loss, and the corrective actions taken or planned to address downstream effects, Duke believes that reasonable assurance of ONS' capability to maintain long term cooling has been demonstrated.

Information From Audits

Plants that have been subjected to an NRC audit of corrective actions for GL 2004-02 should address all open items from the audit in their supplemental responses, briefly stating how each item was addressed.

Duke Response:

The NRC conducted an audit of ONS' corrective actions taken in response to GL 2004-02. The purpose of the audit was to assess the effectiveness of these corrective actions to bring ONS into full compliance with 10CFR50.46. The audit commenced on March 13, 2007 when Duke provided an overview of its work on the GSI-191 project. Following review of the presentation materials and other documents provided by Duke during the overview session, the onsite portion of the audit commenced on March 26, 2007 with the NRC audit team exiting the site March 29, 2007. By letter dated August 28, 2007, the NRC staff issued their audit report, "Oconee Nuclear Station: Report on Results of Staff Audit of Corrective Actions to Address Generic Letter 2004-02." Eleven "Open Items" were documented in Appendix 1 of the NRC Audit Report. ONS' response to these open items is contained in Enclosure 3. Note that some responses may refer to other enclosures due to repetition or overlap of the subject matter addressed in the question.

2006 Requests for Additional Information (RAIs)

Licensees should ensure that GL supplemental response information fully addresses issues identified in the RAIs provided to each licensee in early 2006.

Duke Response:

On February 9, 2006, the NRC issued RAIs to ONS to complete its review of GL 2004-02 responses submitted by ONS on March 1, 2005 and supplemented on September 1, 2005. Upon initial review, ONS found that nearly all RAI questions were multiple-part questions. For purposes of clarity, completeness, and accuracy, ONS separated each RAI question into its multiple parts, identified as parts a, b, c, etc, and provided a response to each. These RAIs and the ONS responses are found in Enclosure 1 to this submittal. As with the audit open items discussed above, some responses may refer to questions found in other enclosures where there is repetition or overlap in the subject matter associated with the question.

Specific Guidance for Review Areas

1. Overall Compliance:

Provide information requested in GL 2004-02 Requested Information Item 2(a) regarding compliance with regulations.

GL 2004-02 Requested Information Item 2(a)
Confirmation that the ECCS and CSS recirculation functions under debris loading conditions are or will be in compliance with the regulatory requirements listed in the Applicable Regulatory Requirements section of this generic letter. This submittal should address the configuration of the plant that will exist once all modifications required for regulatory compliance have been made and this licensing basis has been updated to reflect the results of the analysis described above.

Duke Response:

See ONS response to GL 2004-02 dated September 5, 2005, and updated commitments provided in ONS' letter dated June 28, 2006. In the September 5, 2005, response ONS confirmed that the ECCS and CSS recirculation functions under debris loading conditions would be in compliance with regulatory requirements listed in the Applicable Regulatory Requirements section of the GL. ONS remains committed to that goal. Emergency Sump strainers have been replaced on all three ONS units. The new strainers have increased strainer surface area at ONS from approximately 100 sq ft on each unit to approximately 4800 sq ft on Unit 1 and approximately 5000 sq ft on Units 2 and 3. Debris generation and transport have been evaluated in accordance with staff-approved industry guidance (Nuclear Energy Institute (NEI) Guidance Report (GR) and associated SER published together as NEI 04-07). Debris-laden strainer head loss was determined by testing. A chemical effects evaluation was performed in accordance with staff-approved industry guidance (WCAP 16530-NP rev. 0) and the results were incorporated into the integrated head loss tests. Downstream effects have been evaluated in accordance with staff-approved industry guidance (WCAP 16406-P, rev. 1 and WCAP 16793-NP, rev. 0) and additional components have been identified which will require replacement due to debris plugging concerns. Those items include seal flush orifices and cyclone separators for ECCS and CSS pumps, in addition to impeller wear rings and other wear-susceptible parts in the rotating elements of the High Pressure Injection (HPI) Pumps. Detailed structural analyses have been performed on the new strainers, in addition to missile and jet impingement analyses. Vortexing and air entrainment analyses were also performed. Based upon all of the testing and analyses discussed above, ONS has demonstrated that all of the GSI-191 concerns are addressed pending completion of the remaining downstream modifications. Those modifications and proposed schedule for completion are addressed in ONS' schedule relief request dated December 18, 2007 and supplemented by letter of December 19, 2007 (approved by NRC December 28, 2007).

2. General Description of and Schedule for Corrective actions:

Provide a general description of actions taken or planned, and dates for each. For actions planned beyond December 31, 2007, reference approved extension requests or explain how regulatory requirements will be met as per Requested Information Item 2(b). (Note: All requests for extension should be submitted to the NRC as soon as the need becomes clear, preferably not later than October 1, 2007.)

GL 2004-02 Requested Information Item 2(b)
A general description of and implementation schedule for all corrective actions, including any plant modifications, that you identified while responding to this Generic Letter. Efforts to implement the identified actions should be initiated no later than the first refueling outage starting after April 1, 2006. All actions should be completed by December 31, 2007. Provide justification for not implementing the identified actions during the first refueling outage starting after April 1, 2006. If all corrective actions will not be completed by December 31, 2007, describe how the regulatory requirements discussed in the Applicable Regulatory Requirements section will be met until the corrective actions are completed.

Duke Response:

See ONS response to GL 2004-02 dated September 1, 2005 and updated commitments provided in ONS' letter dated June 28, 2006. These commitments and the current status of each are provided below:

1. *A baseline evaluation has been performed for Oconee by ENERCON Services, Inc. This evaluation was performed using the guidance of NEI 04-07, "Pressurized Water Reactor Sump Performance Evaluation Methodology, Revision 0" (NEI 04-07) as amended by the NRC SER for that methodology. The evaluation is currently under review by Oconee and will be complete by June 30, 2006.*

Status

The baseline evaluation provided by our contractor has been reviewed and revisions have been made inhouse. The evaluation was revised to correct minor errors and to remove the sizing calculation, as it is no longer necessary. ONS sized the replacement strainers based upon the available footprint of the existing strainers and the predicted sump pool depth. Adequacy of the final design was verified by testing in lieu of analysis. The baseline analysis now serves as an evaluation of debris generation only. This evaluation is complete.

2. *A downstream effects evaluation will be completed for Oconee by Stone & Webster. This evaluation will be performed using the methodology provided by WCAP-16406-P, "Evaluation of Downstream Sump Debris Effects in Support of GSI 191," (WCAP-16406-P). Some exceptions to the WCAP-16406-P methodology may be taken. The evaluation is currently in progress and will be complete by June 30, 2006. Any additional plant modifications or procedure changes associated with this evaluation will be completed by December 31, 2007.*

Status

Downstream effects evaluation has been completed by Stone & Webster in accordance with guidance from WCAP 16406-P, rev. 1. This evaluation identified the need to replace the seal flush orifices and cyclone separators on the Reactor Building Spray (BS), Low Pressure Injection (LPI), and High Pressure Injection (HPI) Pumps due to debris blockage concerns. In addition, the wear rings and impeller hubs were identified as needing replacement on the HPI pumps due to wear concerns. Only one HPI pump replacement (HPI pump 3A) remains incomplete at this time. These modifications will not be completed by the date requested in the GL (December 31, 2007). A request for schedule relief and accompanying justification was submitted to NRC by Duke letter of December 19, 2007. NRC approval of this schedule was granted by letter of December 28, 2007.

3. *Chemical effects will be evaluated to confirm that sufficient margin exists in the final sump design to account for this head loss. The evaluation will be complete by June 30, 2006. Any additional plant modifications or procedure changes associated with this evaluation will be completed by December 31, 2007.*

Status

Chemical effects testing is complete for ONS, and the results of those tests have been addressed in subsequent head loss testing of the replacement strainers. No additional modifications were required to address chemical effects.

4. *A modified containment sump strainer and supporting structure will be installed in the fall of 2005 for Oconee Unit 2, the spring of 2006 for Oconee Unit 3 and the fall of 2006 for Oconee Unit 1.*

Status

Reactor Building Emergency Sump strainer modifications were implemented in accordance with the stated schedule and are now complete for all three ONS units.

5. *A walkdown of containment using the guidance of NEI 02-01, "Condition Assessment Guidelines: Debris Sources Inside PWR Containments" was completed for Oconee Unit 3 in the fall of 2004 and a confirmatory walkdown of Unit 1 was completed in the spring of 2005. A similar confirmatory walkdown will be performed for Unit 2 in the fall of 2005.*

Status

Containment walkdowns for debris source assessment are complete for all ONS units.

6. *The plant labeling process will be enhanced to ensure that any additional labels or signs placed inside containment are evaluated to ensure that potential debris sources are evaluated for impact to RBES/ECCS function. This corrective action will be completed by December 31, 2007.*

Status

ONS plant labeling process enhancements are complete.

7. *Enhancements will be made to the Oconee coatings program. These enhancements include: increased programmatic control to clearly document and trend evaluations performed on degraded coatings and to ensure that potential coating debris is evaluated for impact on ECCS and Reactor Building Emergency Sump function. This corrective action will be completed by December 31, 2007.*

Status

ONS containment coatings program enhancements are complete.

8. *Fibrous insulation installed on the cooling water piping associated with each unit's 'B' Auxiliary Reactor Building Cooling Unit will be removed. This insulation removal is complete for Unit 1. The insulation will be removed in the fall of 2005 for Unit 2 and the spring of 2006 for Unit 3.*

Status

Fibrous insulation has been removed from the 'B' Auxiliary Reactor Building Cooling Units in all three ONS containments.

9. *Duke will evaluate the modification process to determine if additional controls are needed in order to maintain the validity of inputs to analyses performed in resolving GSI-191 concerns. This evaluation will be completed by June 30, 2006.*

Status

Modification process review is complete and results are documented in the Duke corrective action program.

In addition to the above, Duke's letter to NRC dated December 19, 2007, provided the following additional commitments:

1. *Replace seal flush orifices and cyclone separators on the Unit 1 LPI, HPI, and BS Pumps. These modifications will be completed by January 31, 2009.*

Status

On schedule.

2. *Replace seal flush orifices and cyclone separators on the Unit 2 LPI, HPI, and BS Pumps. These modifications will be completed during the fall 2008 refueling outage.*

Status

On schedule.

3. *Replace seal flush orifices and cyclone separators on the Unit 3 LPI, HPI, and BS Pumps. These modifications will be completed during the spring 2009 refueling outage.*

Status

On schedule.

4. *Replace the 3A HPI pump to utilize more durable materials for wear susceptible parts. This replacement will be performed during the spring 2009 refueling outage OR the first Unit 3 forced outage of sufficient duration.*

Status

On schedule.

5. *Review procedural guidance for operator recognition of and response to LPI, HPI, or BS seal failures or HPI pump 3A wear related failure. Provide additional procedural guidance if needed.*

Status

Complete.

Three additional follow-on corrective actions have been identified during the course of ONS' reviews of this supplemental response. Those corrective actions are listed as new commitments, along with expected completion dates, in Enclosure 4 of this submittal.

3. Specific Information Regarding Methodology for Demonstrating Compliance:

a. Break Selection

The objective of the break selection process is to identify the break size and location that present the greatest challenge to post-accident sump performance.

1. **Describe and provide the basis for the break selection criteria used in the evaluation.**

Duke Response:

Oconee Nuclear Station was subject to an NRC audit of corrective actions for GL 2004-02 in the spring of 2007. The NRC reviewed the subject area of break selection and found it acceptable. ONS believes the conclusions therein remain correct.

ONS evaluated a number of break locations and piping systems, and considered breaks that rely on recirculation to mitigate the event. The following break location criteria were considered:

Break Criterion No. 1 - Breaks in the RCS with the largest potential for debris;
Break Criterion No. 2 - Large breaks with two or more different types of debris;
Break Criterion No. 3 - Breaks with the most direct path to the sump;
Break Criterion No. 4 - Large breaks with the largest potential particulate debris to insulation ratio by weight; and
Break Criterion No. 5 - Breaks that generate a "thin-bed" - high particulate with 1/8" fiber bed.

ONS considered breaks in the primary coolant system piping having the potential for reliance on ECCS sump recirculation. The review determined that a primary coolant system piping large break loss of coolant accident (LBLOCA) and certain primary coolant system piping small break LOCAs (SBLOCAs) would require ECCS sump recirculation.

For small breaks, only piping that is 2" in diameter and larger was considered. This is consistent with the Section 3.3.4.1 of the NRC's Safety Evaluation Report (SER), which states that breaks less than 2 inches in diameter need not be considered. Section 3.3.5 of the SER describes a systematic licensee approach to the break selection process which includes beginning the evaluation at an initial location along a pipe and stepping along in equal increments (5 foot increments per the SER) considering breaks at each sequential location. However, due to the size of the ZOI applied in the analyses, and the consequent volume of debris generated, it was not necessary to evaluate 5-ft increments. It was clear from inspection that a hot leg break in the Steam Generator cavity containing the pressurizer would maximize the generation of debris in the form of RMI and containment coatings on the cavity walls.

Each unit's walkdown report identified two types of insulation debris within the reactor building: RMI and fibrous insulation. All of the fibrous insulation, with the exception of the small amount of Nuclear Instrumentation cables (0.75 cubic feet per steam generator cavity), is located outside of the secondary shield wall.

2. **State whether secondary line breaks were considered in the evaluation (e.g., main steam and feedwater lines) and briefly explain why or why not.**

Duke Response:

ONS considered secondary side breaks as part of the break selection process. It was determined that secondary system high energy line breaks need not be evaluated for sump operability, as safety analyses have shown that sump recirculation is not required for mitigation of secondary system pipe break events.

3. **Discuss the basis for reaching the conclusion that the break size(s) and locations chosen present the greatest challenge to post-accident sump performance.**

Duke Response:

For SER break selection criterion No. 1, the controlling break location was a fully offset double-ended guillotine break (DEGB) break in the hot leg just prior to the vertical rise in the cavity containing the pressurizer. The results of the evaluation of insulation debris generation for Break Criterion No. 1 determined this particular break location was most limiting with respect to debris generation.

It was determined that the debris generated by Break Criterion No. 1 bounded the debris generated for Break Criterion No. 2 "large breaks with two or more different types of debris." The debris combinations generated by the breaks of Break Criterion No. 1 are reflective metal insulation (RMI) and qualified coatings. The evaluation concluded that Break Criterion No. 1 generates the largest amount of debris, and also the most limiting combinations of debris (RMI and coatings).

For Break Criterion No. 3, "breaks with the most direct path to the sump," the evaluation concluded that the most limiting case is a break of the reactor coolant cold leg piping at the basement elevation. P&IDs (piping and instrument diagrams), as well as piping arrangement, plan and physical arrangement drawings were used to determine possible break locations. Since the RCS cold leg (28" OD) break ZOI is enveloped by the hot leg (36" OD) ZOI, and there is no fibrous insulation debris that can be generated by the cold leg break, there would be less RMI and coating debris generated by the cold leg break. The exception to this argument is when the cold leg break occurs at the basement elevation. Based on the minimum height of the hot leg (809'-6"), a 30 foot radius ZOI would not encompass the basement floor since it is at elevation 776'-6". A cold leg ZOI; however, can reach the basement floor since the cold leg exits the bottom of the steam generators and has a much lower minimum elevation. To account for this difference, the hot leg break was conservatively assumed to reach the basement floor.

Break selection criterion No. 4, "large breaks with the largest potential particulate debris to insulation ratio by weight," is designed to primarily capture maximum particulate loading in a fiber bed. Since ONS does not have sufficient fiber to form a "thin bed" on the sump strainer, this break was not evaluated.

Break selection criterion No. 5, "breaks that generate a thin bed," was not evaluated since there is not sufficient fibrous debris to produce the theoretical "thin bed" on the ONS sump strainer.

In summary, ONS determined that a postulated LBLOCA in the cavity containing the pressurizer located at the steam generator hot legs generates the largest quantities of RMI and coating debris. It was concluded that this reactor coolant system break is bounding for the scope of break locations considered because it generates the largest amount of debris, and also the worst combination of debris with the possibility of being transported to the containment emergency sump strainer.

b. Debris Generation/Zone of Influence (ZOI) (excluding coatings)

The objective of the debris generation/ZOI process is to determine, for each postulated break location: (1) the zone within which the break jet forces would be sufficient to damage materials and create debris; and (2) the amount of debris generated by the break jet forces.

1. **Describe the methodology used to determine the ZOIs for generating debris. Identify which debris analyses used approved methodology default values. For debris with ZOIs not defined in the guidance report (GR)/safety evaluation (SE), or if using other than default values, discuss method(s) used to determine ZOI and the basis for each.**

Duke Response:

Oconee Nuclear Station was subject to an NRC audit of corrective actions for GL 2004-02 in the spring of 2007. During this audit, the NRC reviewed the area of debris generation and ZOI determination and found it acceptable. ONS believes the conclusions therein remain correct.

ONS applied the ZOI refinement discussed in Section 4.2.2.1.1 of the SE, which allows the use of debris-specific spherical ZOIs. Using this approach, the amount of debris generated within each ZOI is calculated and the individual contributions from each debris type are summed to arrive at a total debris source term.

2. **Provide destruction ZOIs and the basis for the ZOIs for each applicable debris constituent.**

Duke Response:

Excluding coatings, the sources of debris at ONS include only insulation debris and latent debris. The evaluation concluded that there are two types of insulation inside the containment that could potentially form debris following a LOCA. These insulations are: 1) RMI (Diamond Power and National Thermal) and 2) generic fiberglass.

Damage Pressures and Corresponding Volume-Equivalent Spherical ZOI Radii

Debris Types	Destruction Pressure (psig)	ZOI Radius/Break Diameter
RMI	2.4 psi	28.6 pipe diameters / 86 feet
Generic Fiberglass	Unknown	28.6 pipe diameters / 86 feet

Latent debris is not determined by the ZOI. See discussion of latent debris in section 3.d of the Supplemental Response Content Guide.

For the RMI insulation at ONS, the evaluation assumed a ZOI size in accordance with the guidance in the SE. For the generic fiberglass insulation at ONS, the largest ZOI for any of the insulation types listed was conservatively selected.

3. **Identify if destruction testing was conducted to determine ZOIs. If such testing has not been previously submitted to the NRC for review or information, describe the test procedure and results with reference to the test report(s).**

Duke Response:

Destruction testing was not conducted to determine ZOIs.

4. **Provide the quantity of each debris type generated for each break location evaluated. If more than four break locations were evaluated, provide data only for the four most limiting locations.**

Duke Response:

Debris Quantities for Case 1

RMI	113484 ft^2
Generic fiberglass	0.75 ft^3

Case 1 was the only break location evaluated since it was determined to be the most limiting. Case 1 was a fully offset double-ended-guillotine-break (DEGB) in the hot leg just prior to the vertical rise in the steam generator cavity containing the pressurizer.

5. **Provide total surface area of all signs, placards, tags, tape, and similar miscellaneous materials in containment.**

Duke Response:

Tape / Tags / Stickers	209 ft^2
Adhesive White RTV Caulk	70.1 ft^2
Black Polysilicone Caulking	3.75 ft^2
Fire Hose	22.9 ft^2
Total	305.75 ft^2

c. Debris Characteristics

The objective of the debris characteristics determination process is to establish a conservative debris characteristics profile for use in determining the transportability of debris and its contribution to head loss.

Duke Response:

Oconee Nuclear Station was subject to an NRC audit of corrective actions for GL 2004-02 in the spring of 2007. The NRC reviewed the subject area of debris characteristics including size distribution, bulk densities, surface areas and assumptions and found it acceptable. ONS believes the conclusions therein remain correct.

1. **Provide the assumed size distribution for each type of debris.**

Duke Response:

The debris sources at ONS include insulation, coating, and latent debris. The insulation debris includes both fibrous (generic fiberglass) and stainless steel reflective metallic insulation (RMI). The characteristics of the insulation debris material and coatings are discussed in this section as the characteristics of latent debris are included in Supplemental Response Content Guide Section 3.d.

<u>Reflective Metallic Insulation (RMI)</u>

The RMI installed at Oconee is primarily Diamond Power Mirror insulation two-mil stainless steel (SS) with the exception of the replacement steam generators that have been insulated with national Thermal Insulation (NTI). The NTI insulation on the steam generators was designed and constructed to meet the original Diamond Power drawings. The size distribution for the RMI is 75% small fines and 25% large pieces as provided in the GR and Table 3-3 of the NRC SER. Most of the RMI material is Diamond Power Mirror insulation. The destruction pressure for Diamond Power Mirror insulation with standard banding is 2.4 psi which corresponds to a ZOI radius of 28.6 pipe diameters in Table 3-2 of the NRC SER.

It should be noted that the effect of RMI debris was addressed with large scale testing performed in 2005. The testing demonstrated that the presence of RMI actually lowered the head loss by acting as a prefilter for the fibrous and particulate debris. Based on these results, RMI was conservatively omitted during the final head loss test.

Generic Fiberglass

All fiberglass debris sources, with the exception of the nuclear instrumentation (NI) cables, are located outside of the secondary shield wall in the reactor building. The NI cable fiberglass wrap will be treated as fibrous debris. This fiberglass insulation does not have any debris destruction data, so it is evaluated with a debris size distribution of 100% small fines as provided in Table 3-3 of the NRC SER. The largest ZOI for any of the insulation types is conservatively selected. Thus, the ZOI is bounded by the Diamond Power ZOI of 28.6 pipe diameters.

Coatings

As documented in the final head loss test report, two paint chip sizes were used. The sizes chosen were 1 - 4 mm and 280 microns - 1mm. The chip sizes were required to be as large as the strainer hole size as indicated by the NRC SER for NEI 04-07. Since the ONS strainer holes are approximately 2.1 mm in diameter, it was essential that the chip sizes chosen encompass this value.

2. **Provide bulk densities (i.e., including voids between the fibers/particles) and material densities (i.e., the density of the microscopic fibers/particles themselves) for fibrous and particulate debris.**

Duke Response:

RMI

As noted earlier, RMI was conservatively omitted from head loss testing; therefore, specific material data is not provided.

Generic fiberglass

Per the NRC SER of NEI 94-07, the density of the generic fiberglass that makes up the NI cable is assumed to be 2.4 lbm/ft^3.

Particulate Debris

Final head loss testing was conducted based on a total number of pounds predicted to travel to the sump; therefore, specific material data is not provided. By combining the transport test results with the total particulate debris postulated in an accident, values were provided to CCI (vendor) that represented the particulate loading if all of the loading was in the form of paint chips within the previously indicated size ranges.

3. **Provide assumed specific surface areas for fibrous and particulate debris.**

Duke Response:

The specific surface area of debris sources (S_v) was only used for preliminary analytically determined head loss values across a debris laden sump strainer using the correlation given in NUREG/CR-6224. Since the head loss across the installed sump strainer for ONS was determined via testing, these values are not used in the design. Therefore, these values are not provided as part of this response.

4. **Provide the technical basis for any debris characterization assumptions that deviate from NRC-approved guidance.**

Duke Response:

ONS used no debris characterization assumptions that deviate from NRC approved guidance.

d. Latent Debris

The objective of the latent debris evaluation process is to provide a reasonable approximation of the amount and types of latent debris existing within the containment and its potential impact on sump screen head loss.

1. **Provide the methodology used to estimate quantity and composition of latent debris.**

Duke Response:

ONS followed the methodology provided in NEI 04-07 and associated SER (Pressurized Water Reactor Containment Sump Evaluation Methodology). This methodology involves several steps in determining the amount of latent debris that is assumed in each Reactor Building.

- Estimate horizontal and vertical surface area
- Evaluate resident debris buildup
- Evaluate the Residual Debris Buildup on Surfaces
- Define debris characteristics
- Determine fractional surface area susceptible to debris buildup
- Calculate total quantity and composition of debris

2. **Provide the basis for assumptions used in the evaluation.**

Duke Response:

See response to item 3 below.

3. **Provide results of the latent debris evaluation, including amount of latent debris types and physical data for latent debris as requested for other debris under c. above.**

Duke Response:

The following sections illustrate the steps Oconee has taken to meet the requirements.

1- Estimate horizontal and vertical surface areas

The unit-specific walkdown reports document the determination of the horizontal and vertical surface areas within the RB. Horizontal surface area was estimated to be 36,805 sq. ft. Vertical surface area was also estimated to be 11,044 sq ft. Vertical surface area was not used for the debris estimate; however, a default debris load was used in lieu of a detailed estimate.

2- Evaluate resident debris buildup

The determination of the amount of debris that has built up in containment was split into two categories.

Vertical
For vertical surfaces, the SER gives 2 options for estimating the debris quantity: 1) Assume a default value of 30 pounds OR 2) Use a detailed sampling plan. For Oconee, the default value of 30 pounds was used.

Horizontal
For sampling debris on horizontal surfaces, the SER agrees with the methodology outlined in NEI 04-07 and recommends a frequency of 2R for containment sampling. Oconee has implemented a sampling program that will collect latent debris from each unit until fall 2008. After fall 2008 latent debris will only be collected if there is a noticeable change in building cleanliness. Since Oconee conducts containment washdowns both at the beginning and end of outages the cleanliness is expected to remain consistent over time. The current latent debris values are based on samples collected during U3EOC20 (spring 2003).

3- Evaluate the Residual Debris Buildup on Surfaces

This section of the SER also addresses the measurement of dust and dirt found on horizontal surfaces of containment. The SER disagreed with the NEI 04-07 guidance and recommends measuring total masses within a known surface area. In addition, the SER recommends identifying several classes of horizontal surfaces (floor areas, tops of major equipment, cable trays, etc). Within each class, at least 3 samples should be taken. As discussed previously, Oconee performed sampling during U3EOC20. During this effort, samples were taken from the basement floor, the RBES area, and a cable tray. These samples were taken by taping off a 20 ft^2 area, vacuuming the area, and weighing the amount of collected debris. The development of the sampling program will clearly outline types of areas that need sampling and will continue the methods performed previously.

4- Define debris characteristics

This section of the SER (Section 3.5.2.3) documents acceptable methods for characterizing the latent debris.

Fiber/Particulate Ratio – Currently, Oconee is assuming a bounding value of 15% fiber as recommended in the SER.

Fiber Density – For all testing and analyses, Oconee has based the fiber quantity on a weight value corresponding to the latent debris collection values. For testing, the fiber component was produced using the actual Owens Corning insulation type that is found in containment. Based on this, a value for the fiber density was not required to be determined. For reporting and conversion purposes only, the value of 2.4 lbm/ft^3 bulk density was used to illustrate the fiber component in terms of cubic feet.

Characteristic Size of Fibrous Debris - Fiber was processed by mechanical means to reduce the fiber's characteristic length to less than approximately 10 mm.

Particle Density and Diameter – Per the SER Oconee has used the default values of 2.7 grams per cubic centimeter and 10 microns for density and diameter, respectively.

Other Factors - The SER and NEI 04-07 also provide options for the dry-bed accumulated density of latent fibers and fiber-specific surface area. Both of these terms are inputs when using the NUREG/CR-6224 correlations to calculate head loss. Since Oconee's strainer qualification (verification of acceptable head loss) is based upon actual test data and not the correlation, these inputs are not needed.

5- Determine fractional surface area susceptible to debris buildup

Oconee has assumed that 100% of the horizontal surface area is susceptible to debris accumulation. As noted above, a default value of debris was used for vertical surfaces.

6- Calculate total quantity and composition of debris

As documented in Appendix F of the Unit 3 Walkdown report the following samples were taken during U3EOC20:

- Basement Floor Level Outside Shield Wall = 13.6 grams OR 0.0015 lbs/ft^2
- Basement Floor Level Inside Shield Wall = 5.6 grams OR 0.00062 lbs/ft^2
- RBES = 169.3 grams OR 0.01866 lbs/ft^2
- Cable Tray = 31.5 grams OR 0.00347 lbs/ft^2

Note that the RBES sample contained a large piece of weld slag that accounted most of the weight.

Based on the samples, the walkdown report calculated a total estimated amount of latent debris from horizontal surfaces as 79.2 pounds.

Using the default value (30 lbs) for the vertical surfaces, the total amount of latent debris in containment is determined to be 109.2 lbs.

Using the default value (15%) for the fiber/particulate ratio, the total amount of latent fiber is 16.38 lbs and the total amount of latent particulate is 92.82 lbs.

4. **Provide amount of sacrificial strainer surface area allotted to miscellaneous latent debris.**

Duke Response:

The ONS strainer design, analyses, and testing included a sacrificial surface area of 325 sq. ft. to account for tape, tags, and stickers deposited on the strainer during sump recirculation. This is a conservative value since the actual area for this type of debris was evaluated to be approximately 209 sq. ft.

e. Debris Transport

The objective of the debris transport evaluation process is to estimate the fraction of debris that would be transported from debris sources within containment to the sump suction strainers.

1. **Describe the methodology used to analyze debris transport during the blowdown, washdown, pool-fill-up, and recirculation phases of an accident.**

Duke Response:

For all of the testing and analyses performed in support of GSI-191, there was no distinction made between blowdown, washdown, pool fill-up, and recirculation in regards to debris transport. In all cases, the debris amounts calculated were assumed to reach the sump strainers with no credit taken for inactive pool volumes. See Item 3.e.6 below for transport fractions and quantities.

2. **Provide the technical basis for assumptions and methods used in the analysis that deviate from the approved guidance.**

Duke Response:

There were no deviations from the approved guidance for debris transport.

3. **Identify any computational fluid dynamics codes used to compute debris transport fractions during recirculation and summarize the methodology, modeling assumptions, and results.**

Duke Response:

A computational fluid dynamics analysis was performed by AREVA in order to determine the bulk fluid velocities in the containment basement during recirculation. The bulk fluid velocity was used as an input to the paint chip transport testing described in Item 3.e.6 below. AREVA used the following codes:

- GAMBIT Version 2.1.6 – This program was used to generate a three dimensional solid model of the containment building from the floor elevation to the selected water surface elevation. GAMBIT was also used to generate the computational mesh and define boundary surfaces required to perform the CFD analysis.
- FLUENT Version 6.1.22 – This program was used to perform the CFD simulations. Fluent is a state-of-the-art general-purpose commercial CFD software package for modeling problems involving fluid flow and heat transfer.

The following outline presents the general methodology for performing the CFD analysis:

- The fluid volume and boundary geometry describing the submerged portions of the containment were developed and meshed in GAMBIT. The meshed geometry was then imported into the FLUENT program. The two-equation realizable k-ε model was used to simulate the effects of turbulence on the flow field. Steady state, isothermal simulations were performed for each LOCA case considered. The results of the simulations included component velocities (x, y, and z directions), turbulent kinetic energy and the dissipation rate of turbulent kinetic energy for each cell in the computational mesh.
- All of the solid surfaces in the containment building below the modeled water surface, including the walls, floors and structural supports, were treated as nonslip wall boundaries. At these surfaces, the normal and tangential velocity components were set to zero.
- The sump strainer cartridges were modeled as a porous surface with a resistance intended to approximate the head loss across the strainer. The flow was drawn through this surface into the sump and left the model through two suction lines, which were modeled as pressure outlets.
- It was assumed that each break flow falls to the pool water surface without contacting any equipment or structures. The break flow jet accelerates under the influence of gravity as it falls towards the water surface. This is a conservative method to model the break flow as it produces the greatest lateral outflow velocities along the floor.
- The portion of the recirculation flow cycled through the spray headers at the top of the containment was maximized at 2400 gpm. The percent of spray through each flow path passing from the upper containment into the basement level were calculated. Each of the flow paths determined was applied as individual mass flow boundary zones on the top of the CFD model.

The results of the CFD analysis determined that the maximum "carrying velocity" in the containment pool following a hot leg break is 0.40 ft/sec. "Carrying velocity" is defined as the highest velocity that produced a continuous isosurface of velocity between the break location and the RBES.

It is also worth noting that the CFD analysis performed by AREVA included debris transport fractions based on the refinements from NEI 04-07. Oconee has not utilized these refined transport fractions in the analyses and testing area; however, they will be retained for additional margin should it be required in the future.

4. **Provide a summary of, and supporting basis for, any credit taken for debris interceptors.**

Duke Response:

No credit has been taken for debris interceptors in the sump pool.

5. **State whether fine debris was assumed to settle and provide basis for any settling credited.**

Duke Response:

For all of the testing and analyses performed in support of GSI-191, there was no settling assumed for fibrous debris, RMI, or paint chips < 75 microns. See response to Supplemental Response Content Guide Question/Item 3.e.6 for paint chip transport information.

6. **Provide the calculated debris transport fractions and the total quantities of each type of debris transported to the strainers.**

Duke Response:

The following outlines the postulated debris quantities produced in a LBLOCA:

Particulate Debris:

Qualified Coating in ZOI	1379.3 lbs
Unqualified Coating	335.0 lbs
Degraded Qualified Coating[1]	Variable
Latent Dust/Dirt	92.82 lbs
RTV Caulk	57.06 lbs
Total	**1864.18 lbs**

1- Note that the amount of degraded qualified coating is considered a variable due to remediation efforts. All analyses and testing performed for GL 2004-02 contain sufficient margin to account for the degraded qualified coating component. Inspections are performed each refueling outage to document the amount of degraded containment coatings. The results of these inspections are reviewed by the RBES engineer to ensure that the assumed analytical/test value remains bounding.

Fibrous Debris:

NI Cable Fiber	0.75 ft^3
Latent Fiber	6.825 ft^3
Total	**7.575 ft^3**
Chemical Precipitates:	493.6 lbs
RMI:	85,113 ft^2

Conservative transport fractions were applied to the above debris totals as applicable to the specific analyses performed, as noted below.

Downstream Analyses

- Particulate Debris - 100% is assumed to transport to the RBES
- Fibrous Debris - 100% is assumed to transport to the RBES
- Chemical Precipitates - 100% is assumed to transport to the RBES
- RMI - 75% is assumed to transport to the RBES with the remaining 25% assumed to be retained in upper containment as allowed by NEI 04-07 and accompanying SER.

Structural Analyses

- Particulate Debris - 100% is assumed to transport to the RBES
- Fibrous Debris - 100% is assumed to transport to the RBES.
- Chemical Precipitates - 100% is assumed to transport to the RBES
- RMI - 75% is assumed to transport to the RBES with the remaining 25% assumed to be retained in upper containment as allowed by NEI 04-07 and accompanying SER.

Head Loss Analyses

- Particulate Debris - Transport fractions were based on actual testing. See below for results.
- Fibrous Debris - 100% is assumed to transport to the RBES
- Chemical Precipitates - 100% is assumed to transport to the RBES
- RMI - 0% is assumed to transport to the RBES. Previous testing has shown that the presence of RMI lowers head loss since the foils act as a prefilter.

Paint Chip Transport Testing

As documented in NUREG/CR-6916 (Hydraulic Transport of Coating Debris), transport tests were performed at steady-state velocities of 0.2 ft/second and the "bulk tumbling velocity" which ranged from approximately 0.4 – 1.4 ft/second. Based upon the Oconee CFD analysis the highest carrying velocity predicted in the Reactor Building (RB) basement is 0.40 ft/second. In addition, the paint types tested by the NRC were general varieties that did not match the Oconee-specific coatings. Because of this, Oconee contracted with CCI to perform additional paint chip transport testing based on Oconee-specific flow rates and paint types. Based on the tests performed the following transport fractions were determined:

Stone Flour – 100% transport fraction
< 75 micron – 100% transport fraction
75 – 280 micron – 75% transport fraction
280 micron – 1 mm – 25% transport fraction
1 – 4 mm – 10% transport fraction

Note that these transport fractions were only used in support of the head loss testing and were not integrated into any other analyses or testing.

f. Head Loss and Vortexing

The objectives of the head loss and vortexing evaluations are to calculate head loss across the sump strainer and to evaluate the susceptibility of the strainer to vortex formation.

1. **Provide a schematic diagram of the emergency core cooling system (ECCS) and containment spray systems (CSS).**

Duke Response:

See summary flow diagram on the following page.

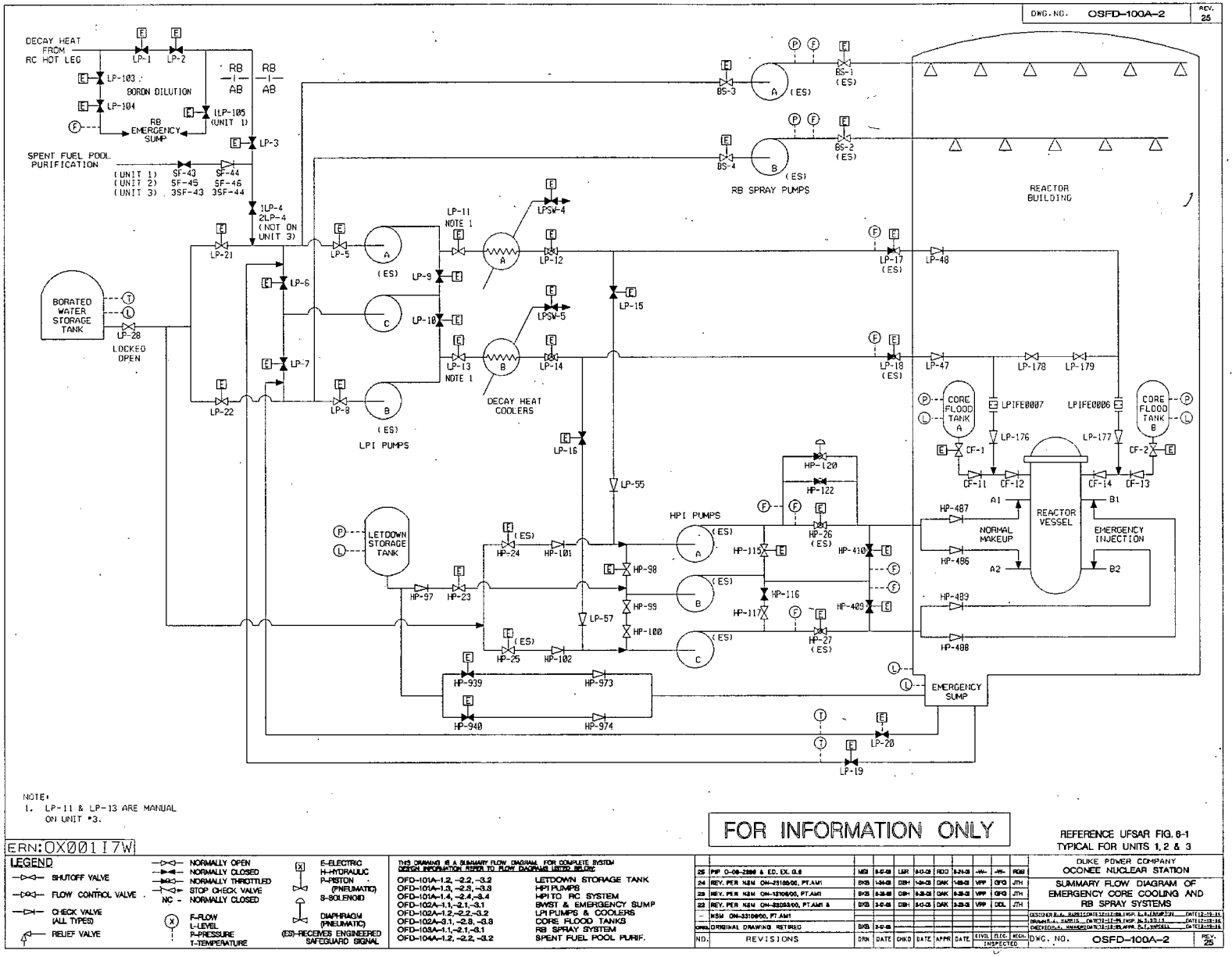
DWG. NO. OSFD-100A-2
REV. 25
DECAY HEAT FROM RC HOT LEG
LP-1
LP-2
LP-103
BORON DILUTION
LP-104
RB EMERGENCY SUMP
1LP-105 (UNIT 1)
LP-3
RB
AB
SPENT FUEL POOL PURIFICATION
(UNIT 1) SF-43 SF-44
(UNIT 2) SF-45 SF-46
(UNIT 3) 3SF-43 3SF-44
1LP-4
2LP-4 (NOT ON UNIT 3)
BS-1 (ES)
BS-2 (ES)
BS-3
BS-4
RB SPRAY PUMPS
REACTOR BUILDING
LP-11 NOTE 1
LPSW-4
LP-12
LP-21
LP-5
LP-9
LP-6
LP-10
LPSW-5
LP-15
LP-17 (ES)
LP-48
BORATED WATER STORAGE TANK
LP-28 LOCKED OPEN
LP-13 NOTE 1
LP-14
LP-7
LP-18 (ES)
LP-47
LP-178
LP-179
LP-22
LP-8
LPI PUMPS
DECAY HEAT COOLERS
CORE FLOOD TANK A
CORE FLOOD TANK B
LPIFE0007
LPIFE0006
LP-176
LP-177
CF-1
CF-2
CF-11
CF-12
CF-14
CF-13
LP-16
LP-55
HP-120
HP-122
HPI PUMPS
HP-26 (ES)
HP-487
REACTOR VESSEL
NORMAL MAKEUP
EMERGENCY INJECTION
A1
B1
A2
B2
LETDOWN STORAGE TANK
HP-24
HP-101
HP-98
HP-115
HP-410
HP-486
HP-97
HP-23
HP-99
HP-116
HP-117
HP-409
HP-489
LP-57
HP-100
HP-27 (ES)
HP-498
HP-25
HP-102
HP-939
HP-973
EMERGENCY SUMP
HP-940
HP-974
LP-20
LP-19
NOTE:
1. LP-11 & LP-13 ARE MANUAL ON UNIT #3.
FOR INFORMATION ONLY
REFERENCE UFSAR FIG. 6-1
TYPICAL FOR UNITS 1, 2 & 3
ERN:OX001I7W
LEGEND
SHUTOFF VALVE
FLOW CONTROL VALVE
CHECK VALVE (ALL TYPES)
RELIEF VALVE
NORMALLY OPEN
NORMALLY CLOSED
NORMALLY THROTTLED
STOP CHECK VALVE
NC - NORMALLY CLOSED
F-FLOW
L-LEVEL
P-PRESSURE
T-TEMPERATURE
E-ELECTRIC
H-HYDRAULIC
P-PISTON (PNEUMATIC)
S-SOLENOID
DIAPHRAGM (PNEUMATIC)
(ES)-RECEIVES ENGINEERED SAFEGUARD SIGNAL
THIS DRAWING IS A SUMMARY FLOW DIAGRAM. FOR COMPLETE SYSTEM DESIGN INFORMATION REFER TO FLOW DIAGRAMS LISTED BELOW
OFD-101A-1.2, -2.2, -3.2 LETDOWN STORAGE TANK
OFD-101A-1.3, -2.3, -3.3 HPI PUMPS
OFD-101A-1.4, -2.4, -3.4 HPI TO RC SYSTEM
OFD-102A-1.1, -2.1, -3.1 BWST & EMERGENCY SUMP
OFD-102A-1.2, -2.2, -3.2 LPI PUMPS & COOLERS
OFD-102A-3.1, -2.3, -3.3 CORE FLOOD TANKS
OFD-103A-1.1, -2.1, -3.1 RB SPRAY SYSTEM
OFD-104A-1.2, -2.2, -3.2 SPENT FUEL POOL PURIF.
NO. REVISIONS DRN DATE CHKD DATE APPR DATE
25 PER O-09-2386 & ED. EX. 0.8
24 REV. PER NSM ON-23109/00, PT.AM1
23 REV. PER NSM ON-13106/00, PT.AM1
22 REV. PER NSM ON-22083/00, PT.AM1 &
– NSM ON-33104/00, PT.AM1
ORIGINAL DRAWING RETIRED
CIVIL ELEC. MECH. INSPECTED
DUKE POWER COMPANY
OCONEE NUCLEAR STATION
SUMMARY FLOW DIAGRAM OF EMERGENCY CORE COOLING AND RB SPRAY SYSTEMS
DWG. NO. OSFD-100A-2
REV. 25

2. **Provide the minimum submergence of the strainer under small-break loss-of-coolant accident (SBLOCA) and large-break loss-of-coolant accident (LBLOCA) conditions.**

Duke Response:

The minimum submergence associated with a LBLOCA has been determined to be 0.9775 feet.

Oconee has not determined a minimum submergence associated with a SBLOCA. However, the minimum submergence for SBLOCA would be only 0.23 ft less than for LBLOCA due to the potential for the Core Flood Tanks to retain their contents for a period of time until the RCS pressure falls below the CFT pressure. Bounding vortex analyses for the LBLOCA scenario shows a relative submergence of 5.96 ft. (see graph in item 3 below). For the reduced flow rates and lower sump temperatures associated with SBLOCA, the Froude number (Fr) would decrease and the required relative submergence (h*) would be lower. Accounting only for the reduced submergence present in SBLOCA, the relative submergence is h* = (0.9775 - 0.23) x .305 / 0.05 = 4.56. From the same graph, the relative submergence for SBLOCA clearly lies in the region where vortexing is not expected.

3. **Provide a summary of the methodology, assumptions and results of the vortexing evaluation. Provide bases for key assumptions.**

Duke Response:

Oconee contracted with CCI to perform a vortex evaluation for the new sump strainers. CCI performed systematic tests to understand this phenomenon. The results from these tests are shown in the following graph:

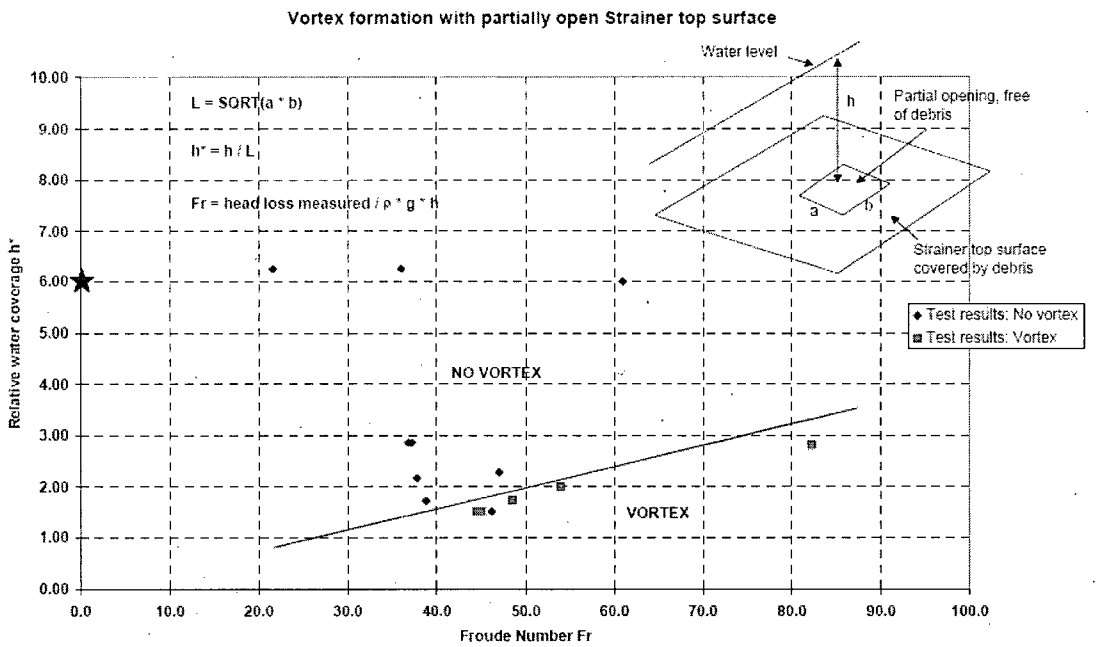

The Froude number, as defined here, is 2 times the measured head loss divided by the submergence elevation h. Based on preliminary head loss testing, the measured head loss at low (conservative) testing temperature and high flow rate of 9000 gpm is 13 mm or 0.013 m. The submergence level h is 0.298 m. Therefore, the Froude number here becomes:

Fr = 2 * 0.013 / 0.298 = 0.0872

The dimensionless submergence level for a reasonable observed "clean strainer window" dimension L of max. 0.05 m then becomes:

h* = h/L = 0.298/0.05 = 5.96

The star in the diagram marks this point of parameters. It can be seen that this point is well inside the parameter range which does not show any vortex formation on top of the cover plates.

It is worth noting that Oconee contracted with the CCI subject matter expert for support during the Oconee GSI-191 audit conducted in 2007. The CCI representative met with the NRC personnel about the vortex issue and CCI's testing for the French. The NRC audit report identified no open items in this area.

4. **Provide a summary of the methodology, assumptions, and results of prototypical head loss testing for the strainer, including chemical effects. Provide bases for key assumptions.**

Duke Response:

See response to item 10 below.

5. **Address the ability of the design to accommodate the maximum volume of debris that is predicted to arrive at the screen.**

Duke Response:

See response to item 10 below.

6. **Address the ability of the screen to resist the formation of a "thin bed" or to accommodate partial thin bed formation.**

Duke Response:

See response to item 10 below.

7. **Provide the basis for the strainer design maximum head loss.**

Duke Response:

See response to item 10 below.

8. **Describe significant margins and conservatisms used in the head loss and vortexing calculations.**

Duke Response:

See item 3 above for vortex conservatism. See response to item 10 below for head loss conservatism.

9. **Provide a summary of the methodology, assumptions, bases for the assumptions, and results for the clean strainer head loss calculation.**

Duke Response:

Clean strainer head loss was verified by testing in lieu of calculation. Test results showed conclusively that clean strainer head loss is negligible under bounding post-accident sump conditions. The clean strainer head loss was determined to be less than 0.01 ft. at 235.4 F.

10. Provide a summary of the methodology, assumptions, bases for the assumptions, and results for the debris head loss analysis.

Duke Response:

In support of the GSI-191 resolution, Oconee performed integrated head loss testing at the CCI facilities, as described below.

Description of Test Loop

The CCI multi functional test loop was a closed recirculation loop with test channel piping, pump and measuring devices.

The water recirculation in the loop was achieved by means of a centrifugal pump and measured with a flow meter with a capacity of 200 m^3/h. The test was performed between 10 C and 30 C. The flow rate was adjustable by means of the frequency which controlled the speed of the pump motor.

The head loss across the strainer was measured by means of a KELLER differential pressure transducer.

The temperature of the water was measured using a Ni-CrNi Thermocouple K.

A CCI strainer segment with 40 representative pockets was placed in the Plexiglas channel prior to the loop being filled with water. The 40-pocket specimen had a vertical orientation while the water flow was horizontal into the pockets. The specimen was 10 pockets high (120 mm height per pocket) by 4 pockets wide (84 mm per pocket) and the pockets were 400 mm deep. The distance of the test pockets above the floor was approximately 30 mm.

In order to keep the debris suspended, a steel sheet was inserted between the Plexiglas modules. This sheet was used to create a flow disturbance on the bottom of the channel to keep the debris suspended until it transported to the strainer.

Scaling Factor

The scaling factor was based on the area of strainer surface in containment versus the area in the test loop. For this testing, the scaling factor was determined to be 103.

Chemical Precipitates

A series of chemical tests was performed to quantify the impact on debris head loss due to chemical precipitates which may form in the post-LOCA containment sump pool. Based on the Westinghouse Owner's Group (WOG) chemical effects evaluation, Document No. WCAP 16530-NP, rev. 0, the primary precipitates which may form post-accident are sodium aluminum silicate ($NaAlSi_3O_8$) and aluminum oxyhydroxide (AlOOH). In lieu of aluminum oxyhydroxide, aluminum hydroxide ($Al(OH)_3$) was precipitated in the chemical test. Although aluminum hydroxide has a slightly different crystal structure than aluminum oxyhydroxide, the two are chemically equivalent.

In addition, as some calcium will dissolve in the post-LOCA sump per the WCAP, some calcium phosphate precipitate will form.

Laboratory testing was performed in order to assure the correct chemical compositions were used in the scaled chemical tests. The tests were compared to the WOG evaluation in order to assure the results were within an acceptable range of the WOG results.

The CCI chemical testing program used chemical solutions to induce the precipitation within the testing flume. In order to determine the necessary amounts of chemicals used in the testing, the WCAP estimates for elemental constituents must be used. This section outlines the steps necessary to convert from WCAP precipitates to necessary amount of chemical solution for the testing.

Outputs from WCAP

Aluminum released = kg Al
Sodium aluminum silicate precipitate = kg $NaAlSi_3O_8$
Aluminum oxyhydroxide precipitate = kg AlOOH
Calcium phosphate precipitate = kg $Ca_3(PO_4)_2$

Conversion to Elemental Forms

kg Al = given from WCAP

$$kg\ Si = \frac{3*MW_{Si}}{MW_{Na}+MW_{Al}+3*MW_{Si}+8*MW_{O}} * kg\ of\ NaAlSi_3O_8$$

$$kg\ Ca = \frac{3*MW_{Ca}}{3*MW_{Ca}+2*MW_{P}+8*MW_{O}} * kg\ of\ Ca_3(PO_4)_2$$

Where:
MW_{Si} = molecular weight of silicon = 28.086
MW_{Na} = molecular weight of sodium = 22.99
MW_{Al} = molecular weight of aluminum = 26.982
MW_{O} = molecular weight of oxygen = 15.999
MW_{Ca} = molecular weight of calcium = 40.078
MW_{P} = molecular weight of phosphorus = 30.974

Conversion to Chemical Solutions used in Testing

The CCI testing program used 3 solutions to produce the necessary chemical precipitates. The conversion from elemental Al, Si, and Ca to the amounts of solution is as follows:

$$kg\ sodium\ aluminate = \frac{kg\ Al}{Scale\ Factor * \%Al\ in\ Al_2O_3 * \%Al_2O_3\ in\ sodium\ aluminate}$$

$$kg\ calcium\ chloride = \frac{kg\ Ca}{Scale\ Factor * \%Ca\ in\ CaCl_2 * \%CaCl_2\ in\ calcium\ chloride}$$

$$kg\ sodium\ silicate = \frac{kg\ Si}{Scale\ Factor * \%Si\ in\ SiO_2 * \%SiO_2\ in\ sodium\ silicate}$$

Where:
% Al in Al_2O_3 = 52.9%
% Al_2O_3 in sodium aluminate solution = 15%
% Ca in $CaCl_2$ = 36.11%
% $CaCl_2$ in calcium chloride solution = 33.9%
% Si in SiO_2 = 46.7%
% SiO_2 in sodium silicate solution = 26.9%
Scale Factor = 103

All of the above values and equations were determined by chemical assays.

In order to account for the calcium in the tap water and the stone flour, the amount of calcium chloride was reduced accordingly.

Fibrous Debris

As documented in previous sections of this response, the fibrous debris total includes approximately 6.8 ft^3 of latent fibers. As documented in the Oconee baseline analysis, the only other fibrous debris is 0.75 ft^3 of fiber from the nuclear instrument cabling. For the testing, this number was rounded up to 10 ft^3 which converted to 10.9 kg or 106 grams when scaled to the testing flume.

Particulate Debris

The amount of particulate debris postulated at Oconee includes inputs from:

- Qualified coatings within the ZOI
- Unqualified coatings in containment – 100% assumed to fail
- Degraded qualified coatings outside of the ZOI
- Latent dust/dirt/debris
- White RTV caulk and black polysilicone caulk

Based on the debris totals documented in the head loss calculation, the total particulate loading assumed for the head loss test was 2593 lbs, which converted to 25.2 lbs when scaled to the testing flume.

Based on the SER guidance, plants that can not substantiate a fibrous "thin bed" are required to assume that the coatings fail as chips equal to the size of the strainer holes. Based on this guidance, the paint chip size would be specified as 2.1 mm. For conservatism, two different chip sizes were used with the quantity of each equal to the necessary total of 25.2 lbs as adjusted by the Paint Chip Transport results discussed earlier. The size ranges were selected to ensure enveloping of the strainer hole size of 2.1 mm.

Finally, for additional conservatism, a quantity of stone flour was added. The total added represented approximately 10% of the particulate debris total of 25.2 lbs.

Results

The documented results for the final integrated head loss test are given below.

The following debris was added during the second head loss test:

Fiber	106 grams
0.28 – 1 mm paint chips	5.71 kg
1 – 4 mm paint chips	1.146 kg
Stone flour	1.142 kg
Sodium aluminate solution	2.54 kg
Calcium chloride solution	0.71 kg
Sodium silicate solution	5.01 kg

Based on information presented earlier in this document, the debris amounts correspond to the following actual debris values for the Oconee RB:

Fiber	24 lbs or 10 ft^3 based on an assumed density of 2.4 lbm/ft^3
0.28 – 1 mm paint chips	5187 lbs of particulate debris (200% of particulate loading)
1 – 4 mm paint chips	2593 lbs of particulate debris (100% of particulate loading)
Stone flour	259 lbs of debris (10% of particulate loading)
Elemental Al	20.8 kg
Elemental Ca	24.4 kg
Elemental Si	64.8 kg

The chemicals were added in a different order than stipulated in the WCAP testing. The order was: silica, aluminum, and calcium. The change was made to more closely match the appearance of the chemicals in the RB post-accident. The aluminum is released slowly over time as the aluminum components corrode. By adding the silica first, sodium aluminum silicate will preferentially form when the aluminum is added, which matches the WCAP methodology.

The results of head loss versus time show that the head loss stabilized at approximately 0.014 ft. when adjusted to a temperature of 235.4 F.

Testing Conservatisms

The follow documents some of the conservatisms associated with the testing:

- Amounts of particulate debris were increased to approximately 300% of the predicted debris loading.
- Method of fiber addition maximized the potential for uniform fiber deposition:
  - Slow fiber addition
  - High dilution volumes for addition
  - Adding the fiber immediately in front of the strainer
  - Addition of a vertical plate to induce turbulence and prevent fiber from transport away from the strainer.
  - Technicians used a stick to separate the fibers if agglomeration was identified after fiber addition
- Paint chip transport fractions were very conservative.
  - Total transport fractions were based not only on the percentage transport, but also on the amount of debris that floated on top of the water and the debris that was lost during the transport test. This total amount was then rounded up to the nearest usable value.
  - The transport fractions were based on the highest flow rate tested. The actual maximum value recorded in the Oconee CFD was 0.32 ft/second. This value was found in only one of the break scenarios analyzed and was found in <20% of the RB basement area.
  - The paint chips produced for the testing were less dense than the predicted paint chips produced in a Large Break LOCA. The lower density leads to a greater transport fraction since heavier chips are more resistant to transport.
  - Based on observations during the testing, the larger size debris fractions also contained smaller particles that probably accounted for the majority of the transport fraction. To obtain the necessary size fractions, sieves were used; however, normal handling of the debris led to some breakdown of the chips. Based on this, the assumed transport fractions of the larger sizes are heavily weighted based on the smaller debris. In reality, a paint chip that is 1-4 mm in size would not be expected to transport at the tested flow velocity.
  - Use of these transport fractions for future testing is very conservative since the fractions are based on a bulk velocity in the basement which is much higher than the approach velocities at the strainer. The bulk velocities will help predict the amount of debris that will transport to the vicinity of the strainer; however, the approach velocities will determine the amount of debris that is pulled into the pockets and will be available to block the strainer holes or bypass the strainer and be available to affect downstream components.
- Debris was added within 1 foot of the strainer to prevent settling.
- Debris was allowed to circulate continuously without settling. In actual plant conditions, the debris that passes through the strainer must travel a tortuous path in order to reach the strainer for a second time.

- 100% of the paint was assumed to fail at the given chip sizes. This is conservative since observations indicate most of the degraded qualified coating fails as larger chips that will not transport.
- No RMI was included in the debris totals.

11. State whether the sump is partially submerged or vented (i.e., lacks a complete water seal over its entire surface) for any accident scenarios and describe what failure criteria in addition to loss of net positive suction head (NPSH) margin were applied to address potential inability to pass the required flow through the strainer.

Duke Response:

See Response to RAI Question 36a.

12. State whether near-field settling was credited for the head-loss testing and, if so, provide a description of the scaling analysis used to justify near-field credit.

Duke Response:

Near-field settling was not credited during head loss testing. As discussed earlier, paint chip transport testing was performed in order to determine the fraction of certain chip sizes that could transport. Additional settling was prevented by efforts discussed in the previous section.

13. State whether temperature/viscosity was used to scale the results of the head loss tests to actual plant conditions. If scaling was used, provide the basis for concluding that boreholes or other differential pressure-induced effects did not affect the morphology of the test debris bed.

Duke Response:

As noted above, head loss measured during the integrated head loss tests was adjusted for temperature effects. Testing was performed with water at a maximum temperature of 30 C (86 F) versus a maximum post-accident sump recirculation temperature of about 240 F. As discussed in part 10 above, the differential pressure measured across the debris bed was less than 0.1 ft. It is clear from these parameters that borehole formation due to flashing or differential pressure effects during testing is not a credible concern.

14. State whether containment accident pressure was credited in evaluating whether flashing would occur across the strainer surface, and if so, summarize the methodology used to determine the available containment pressure.

Duke Response:

A formal flashing evaluation was not performed for the replacement strainers at ONS. However, as stated above, the pressure drop (< 0.1 ft head loss) across the debris bed is very low. With an available minimum submergence of approximately one foot of water, significant flashing would not be expected, even at saturated sump conditions.

g. Net Positive Suction Head (NPSH)

The objective of the NPSH section is to calculate the NPSH margin for the ECCS and CSS pumps that would exist during a loss-of-coolant accident (LOCA) considering a spectrum of break sizes.

Duke Response:

Oconee Nuclear Station was subject to an NRC audit of corrective actions for GL 2004-02 in the spring of 2007. The NRC reviewed the subject area of NPSH and found it acceptable. ONS believes the conclusions therein remain correct.

1. **Provide applicable pump flow rates, the total recirculation sump flow rate, sump temperature(s), and minimum containment water level.**

Duke Response:

The NPSH analyses that support the LPI and BS pumps are currently undergoing a major rewrite that is expected to be complete by September 30, 2008. Since this Supplemental Response is being submitted prior to the time that the NPSH analyses will be revised, the existing LPI flow rates and NPSH margins will not be reported here. This is considered acceptable by Oconee for three reasons:

a. The existing NPSH analyses assume a negligible value for the head loss across the debris bed of the strainer. Based on the head loss testing presented earlier, this assumption has been verified to be valid for the new sump strainer.
b. The new sump strainer was not designed based on the available NPSH margin alone. The new strainer was designed based on the maximum strainer size that could be fit into the available space in the containment basement and remain sufficiently submerged to preclude vortex formation. Testing confirmed that the new strainer design produced negligible head loss.
c. The existing NPSH analyses were reviewed during the NRC GSI-191 audit with no Open Items identified.

2. **Describe the assumptions used in the calculations for the above parameters and the sources/bases of the assumptions.**

Duke Response:

See response to part 1 above.

3. **Provide the basis for the required NPSH values, e.g., three percent head drop or other criterion.**

Duke Response:

Based upon discussions with the pump manufacturer, the NPSHr curves are based on a 3% head drop for ECCS and BS pumps.

4. **Describe how friction and other flow losses are accounted for.**

Duke Response:

The NPSH analyses are produced using the computer code KYPIPE which uses a direct solution of the basic pipe system hydraulic equations using a linearization scheme and sparse matrix methods to handle the non linear terms in the energy equations. The hydraulic system is entered into the code as a series of nodes connected by pipes. The pipe lengths entered into the code are the sum of the lengths of straight pipe between nodes. Pipe roughness is determined from published data and is also entered into the code for each pipe. Friction losses for pipes are then calculated by KYPIPE based on the Darcy Weisbach equation and the user-defined pipe roughness, viscosity, and fluid specific gravity. Friction and form losses for fittings (elbows, tees, valves, etc.) are calculated based on either published or vendor-provided loss coefficients.

5. **Describe the system response scenarios for LBLOCA and SBLOCAs.**

Duke Response:

System response is determined by break size and resulting Reactor Coolant System (RCS) and containment pressure characteristics. The LPI pumps are actuated when RCS pressure decreases to 500 (550 setpoint) psig or containment pressure reaches 4 (3 setpoint) psig. Once actuated, system design provides sufficient flow resistance to prevent pump runout while ensuring required flow is delivered. Similarly, the BS pumps are actuated when containment pressure increases to 15 (10 setpoint) psig. Depending on break size, BS pump actuation may or may not occur depending upon RB pressure reaching the BS actuation setpoint. Once actuated, BS system design prevents flow rates higher than 1200 gpm per train.

For a small break LOCA, the rate of RCS depressurization will be slow and could therefore create a delay between HPI and LPI actuations. Due to the relatively low shutoff head of the LPI pumps, direct injection of LPI flow to the RCS will not begin until the RCS depressurizes to approximately 200 psig. For a large break LOCA, rapid RCS depressurization, and concurrent containment pressurization, will cause HPI, LPI, and BS actuation early in the event. For the bounding large break LOCA, RCS pressure will be sufficiently low to allow full HPI and LPI flow, resulting in the most rapid depletion of the BWST and therefore earliest switchover to ECCS sump recirculation.

The HPI pumps (if HPI termination criteria are not satisfied prior to sump recirculation) are aligned to take suction from the discharge of the LPI pumps (piggyback operation). Transfer to ECCS sump recirculation is then accomplished by opening the ECCS sump suction valves and closing the BWST suction valves.

6. **Describe the operational status for each ECCS and CSS pump before and after the initiation of recirculation.**

Duke Response:

ONS has two trains of ECCS and containment spray on each unit. Both ECCS trains and both BS trains are normally in standby, aligned to the Borated Water Storage Tank (BWST). These pumps are aligned to the ECCS sump by manual operator actions once a predetermined minimum water level in the BWST has been reached.

7. **Describe the single failure assumptions relevant to pump operation and sump performance.**

Duke Response:

The limiting single failure analysis for ECCS and BS pump NPSH is loss of a single BS pump. This event is limiting because it results in the highest flow rate through the remaining LPI pump while minimizing the time the system can draw down the BWST. It also produces the highest sump temperatures and lowest reactor building pressures, which minimizes the amount of overpressure available to support NPSHa.

8. **Describe how the containment sump water level is determined.**

Duke Response:

The Reactor Building is essentially a cylindrical structure with some curvature at the bottom, and a floor that is sloped from side to side. The post accident water level is determined by finding the total volume which is expected to reach the basement floor and dividing by the floor area. The calculation takes into account the concrete structures, piping and mechanical equipment in the Reactor Building. Hangers, stairways and miscellaneous steel are not taken into account. All piping volumes are modeled as straight pipe – no credit is taken for valves. Piping below 4" in diameter is not taken into account. Water level is based on a transfer of water from the Core Flood Tanks and the Borated Water Storage Tank. All areas and volumes for equipment, concrete, concrete structures, etc. are rounded down to the nearest tenth of square ft (ft^2) or cubic foot (ft^3) respectively. Volume adjustments are made for variances in reactor building geometry such as sloping floor, curvature at the floor-to-wall joint, intervening structures such as shield walls, vessel supports, and vessels. Other adjustments are necessary to account for water volumes which can be trapped in areas where they do not contribute to level increase, such as sumps, vessel cavity, fuel transfer canal, and reactor building spray headers. Adjustments are

also made to account for RCS shrinkage and refill of the pressurizer, as well as water lost to the generation of steam. The adjusted volume is then divided by the total reactor building floor surface area. The equation for the determination of final post accident reactor building water level is then:

$L_{rb} = V_a / A_{rb}$
where: L_{rb} = Reactor Building Water Level
V_a = Adjusted Volume of Water added to the Reactor Building
A_{rb} = Reactor Building floor surface area

The corresponding elevation of the minimum Reactor Building water level, Z_{wl}, is then determined by the following equation:

$Z_{wl} = L_{rb} + 776.88$ (Reactor Building Mean Floor Elevation)

9. **Provide assumptions that are included in the analysis to ensure a minimum (conservative) water level is used in determining NPSH margin.**

Duke Response:

General analytical approach:

Water level is based on a transfer of water from the Core Flood Tanks and the Borated Water Storage Tank. No other sources of water are credited. The Reactor Coolant System is assumed to remain full, based upon a break at the top of the hot leg.

Volume transferred from the Core Flood Tanks is based upon the minimum Technical Specification required levels for each at time zero in the event. While not procedurally required, the tanks are assumed to be isolated at zero indicated level.

Volume transferred from the BWST is based upon the minimum Technical Specification required level of the Borated Water Storage Tank. The BWST is assumed to be drawn down to a level of 6 ft as prescribed by the Emergency Operating Procedure.

The access door and ladder cavity underneath the reactor vessel is assumed to fill with water. Although the access door is not water tight, and some flow out of this area would be expected, there are shield bricks partially blocking the door. Therefore, this flow path was not credited.

Volume reductions are required to account for depressions in the floor (below finished grade) as well as for retained water in localized compartments within containment.

Specific conservative assumptions

Water Lost to Reactor Vessel Cavity:
The retention of water in the reactor vessel cavity is determined. Water will accumulate on the floor of the shallow end of the Fuel Transfer Canal sufficient to create flow into the reactor vessel seal plate annulus. Once in the annulus area, more water will be retained as necessary to develop flow into the two 3" drains to the vessel cavity. Some of the water in the vessel cavity will be retained in areas lower than the mean floor level, and not contribute to NPSH for the BS and LPI systems. Also, some level above the mean water level will be required in order to create flow through the 4" drain to the normal sump. This incremental level will also be lost with respect to NPSH contribution.

Water Lost to Fuel Transfer Canal:
The retention of water in the deep end of the Fuel Transfer Canal is determined. Water will accumulate in the FTC to a level sufficient to create full flow in the drains.

Water Lost to RCS Shrinkage:
RCS will shrink in volume as it cools from the normal operating temperature of 579 F (Tavg) to a final cooldown temperature of 150 F (used for conservatism).

Water Lost to Pressurizer Refill:
The vapor space in the pressurizer is conservatively assumed to refill with water following the event.

Water Lost to Incore Trench:
Portions of the incore trench are below grade elevation and must be subtracted from the volume credited for increasing water level in the RB basement.

Water Lost to Vaporization:
The water which is vaporized to create the steam pressure in the reactor building represents a volume loss that is not available to contribute to increased level in the building.

Water Lost to Sumps:
The Normal and Emergency Sumps are below finished grade and their volumes must be subtracted from the volume credited for increasing level above the mean floor elevation.

Water Lost to Floor Drain Lines:
The 4" and 6" Floor Drain lines are below finished grade and their volumes must be subtracted from the volume credited for increasing level above the mean floor elevation.

Other assumptions:
Basket strainers used for fuel transfer canal deep end drains during refueling and washdown activities are assumed to be removed prior to unit startup.

The four-inch drain line from the reactor vessel cavity to the normal sump is assumed to be open and unrestricted at both ends.

10. Describe whether and how the following volumes have been accounted for in pool level calculations: empty spray pipe, water droplets, condensation and holdup on horizontal and vertical surfaces. If any are not accounted for, explain why.

Duke Response:

Empty Spray Pipe:
As the Reactor Building Spray System is brought into service, the spray headers downstream of the isolation valves (BS-1 and BS-2) must be filled with water before flow is developed through the spray nozzles. Since these headers remain full of water throughout the event, the volume of the header piping represents lost volume which does not contribute to additional water level in the RB basement.

It should be noted, when spray is terminated this volume is regained through open drains inside the RB at the penetrations for the BS header piping. This volume of water is not credited in the final minimum water level value.

Water droplets:
See response to Audit Open Item 3.7-1.

Condensation:
See response to Audit Open Item 3.7-1.

Holdup on horizontal and vertical surfaces:
No additional holdup on horizontal or vertical surfaces is assumed beyond the 1/32" condensation film addressed in response to Audit Open Item 3.7.1. Vertical surfaces will not retain water, and generous use of grating and floor drains on all levels of the Reactor Buildings will preclude significant accumulation of water on horizontal surfaces.

11. Provide assumptions (and their bases) as to what equipment will displace water resulting in higher pool level.

Duke Response:

Volume adjustments are required to account for the curvature of the containment liner plate where it meets the basement floor as well as for equipment and piping which is located above floor level but expected to be submerged below the water surface. All volumes calculated below assume a depth of 4.25 feet in the RB basement. This assumption is valid and reasonable given that the final water depth is known to be 4.4 feet in the RB basement. The bases for these assumptions are various piping drawings and vendor manuals.

1. Curvature of Liner Plate

The curvature of the liner plate is above grade and its volume must be added to the volume credited for level above the mean floor elevation.

Vcur = 2,500 ft^3

2. Quench Tank Cooler Foundations (2)

Volume Displaced, Vqtcf = 8.074 ft^3

3. Letdown Cooler Bases (2)

Volume Displaced, Vldcb = 40.498 ft^3

4. Elevator Shaft and Curb

Total Volume of Shaft and Curb, Vel = 41.907 ft^3

5. Steam Generator Bases

Total Volume of Steam Generator Bases, Vsg = 10.798 ft^3

6. Quench Tank

Vqt = 64.122 ft^3

7. Quench Tank Cooler

Vqtc = 1.269 ft^3

8. Piping Below Assumed Water Level of 4.25 feet

a) 14" Discharge Pipe from CF Tank 1A
Water Volume Displaced = 14.72 ft^3
b) 30" Primary Outlet Pipe from Steam Generators
Water Volume Displaced = 157.669 ft^3
c) 4" Waste Disposal Header
Water Volume Displaced =10.704 ft^3

Total Water Volume Displaced, Vpipe = 14.72 + 157.669 + 10.704 = 183.093 ft^3

9. Letdown Coolers

Volume of Letdown Cooler, Vldc = 6.129 ft^3

12. Provide assumptions (and their bases) as to what water sources provide pool volume and how much volume is from each source.

Duke Response:

Volume additions are credited only from the Borated Water Storage Tank (BWST) and the Core Flood Tanks (CFTs).

BWST volume = 40,715 ft^3
CFT volume = 1959 ft^3

13. If credit is taken for containment accident pressure in determining available NPSH, provide description of the calculation of containment accident pressure used in determining the available NPSH.

Duke Response:

Containment overpressure is credited when calculating available NPSH for the reactor building spray (BS) and low pressure injection (LPI) pumps after containment sump recirculation begins. The minimum amount of overpressure available at the beginning of containment sump recirculation is 0.44 psi. The overpressure increases incrementally to 2.2 psi within 4 minutes. At least 2.2 psi of overpressure is sustained through the end of the event.

To determine the available overpressure, the FATHOMS/DUKE-RS code (FATHOMS) is utilized to calculate the accident containment pressure and temperature response to a large break LOCA. The methodology utilized in the analysis is consistent with that given in the Duke Power topical report DPC-NE-3003-PA Revision 1. The Safety Evaluation Report for this topical was issued by the NRC on September 24, 2003. Section 2.4.2 of this topical report gives a description of the simulation model used for containment analysis with the FATHOMS code.

The hot leg break scenario creates the combination of low accident building pressure and high containment sump temperature which presents the greatest challenge to NPSH. During the hot leg break event, the core is flooded within minutes of the accident, thereby eliminating long-term steaming from the break. Core decay heat is removed from the RCS entirely through injection water, which then exits the break. This allows building pressure to decrease even more rapidly. In addition, as decay heat is being removed through the injection water, the containment sump temperature increases. Once sump recirculation phase is entered, available containment overpressure begins to increase due to the additional warm water flashing from the break and movement of warm water into the containment atmosphere. This movement of warm water provides additional containment pressure above saturation conditions.

14. Provide assumptions made which minimize the containment accident pressure and maximize the sump water temperature.

Duke Response:

Various initial and boundary conditions are analyzed to produce a conservative available NPSH determination. The accident containment pressures and temperatures are determined for a combination of initial building conditions. The following summarizes the various sensitivities performed to ensure that conservative initial conditions are chosen:

- Reactor Building Initial Pressure is varied from 12.0 psia to 15.9 psia
- Reactor Building Initial Temperature is varied between 118 F to 160 F
- Reactor Building Initial Relative Humidity is assumed to be 100% since this maximizes the initial amount of steam in the building, and therefore is conservative for NPSH considerations
- High Reactor Building Free Volume: 1,828,000 ft3 (nominal + 1%)
- Low passive heat sink areas: Nominal – 1%
- Reactor Building Spray (BS) flow is assumed to be at maximum flow since it minimizes containment pressure
- Borated Water Storage Tank (BWST) Initial Temperature is varied between 40 F and 115 F
- Reactor Building Cooling Unit (RBCU) capacity is varied between 40 million Btu/hr to 300 million Btu/hr
- Low Pressure Service Water (LPSW) Temperature is varied from 45.0 F to 86.5 F
- Decay heat model: ANS 5.1-1979 + 2 sigma uncertainty (maximizes energy to RB)

15. Specify whether the containment accident pressure is set at the vapor pressure corresponding to the sump liquid temperature.

Duke Response:

The FATHOMS/DUKE-RS (FATHOMS) containment analysis code is used to determine the containment response during the accident. The containment overpressure that is available for NPSH calculations is defined as the difference between the absolute static pressure of the containment atmosphere as computed by FATHOMS and the vapor pressure of the containment sump fluid. The containment pressure in the FATHOMS analysis is not forced to be equal to the saturation pressure corresponding to the sump liquid temperature. Although the containment response usually tends to go towards saturated conditions, the code does allow for superheated or subcooled conditions to exist as the interfacial heat transfer equations dictate.

16. Provide the NPSH margin results for pumps taking suction from the sump in recirculation mode.

Duke Response:

See response to part 1 above.

h. Coatings Evaluation

The objective of the coatings evaluation section is to determine the plant-specific ZOI and debris characteristics for coatings for use in determining the eventual contribution of coatings to overall head loss at the sump screen.

1. **Provide a summary of type(s) of coating systems used in containment, e.g., Carboline CZ 11 Inorganic Zinc primer, Ameron 90 epoxy finish coat.**

Duke Response:

Oconee's containment liner plate was originally coated with Phenoline 305 topcoat over CZ 11 inorganic zinc primer. More recently, liner plate maintenance and coatings reconstitution efforts have utilized a Carboline 890 epoxy system. Concrete walls and floors used an original system of Carboline 195 Epoxy Surfacer with Phenoline 305 finish coat. Concrete coatings are also maintained with Carboline 890 (same as for the liner plate coatings), and reconstituted with a prime coat of Starglaze 2011S when necessary.

Various OEM coatings are used on equipment inside containment, including epoxy phenolic, high temperature aluminum, alkyd enamel, and cold galvanizing.

2. **Describe and provide bases for assumptions made in post-LOCA paint debris transport analysis.**

Duke Response:

See Supplemental Response Content Guide Questions/Items 3.e.6 and 3.f.10

3. **Discuss suction strainer head loss testing performed as it relates to both qualified and unqualified coatings and what surrogate material was used to simulate coatings debris.**

Duke Response:

See Supplemental Response Content Guide Question 3.f for a discussion of the head loss testing.

All of the testing performed used paint chips produced using Carboline 890 with no zinc primer to represent the particulate component of the debris total. In addition, as documented previously in Supplemental Response Content Guide Question 3.f, a quantity equal to approximately 10% of postulated particulate debris of stone flour was added to determine the effect on head loss. While the addition was not made specifically to represent a particular type of debris, it would be considered representative of latent dust/dirt/debris and some portion of the coatings debris.

4. **Provide bases for the choice of surrogates.**

Duke Response:

Based on the relative densities of Carboline 890, Carboline 305, and CZ 11 inorganic zinc primer this is conservative. The following are the documented dry film densities for each of these coatings:

- Carboline 305 – 13.49 lbs/gallon
- Carboline 890 – 14.52 lbs/gallon
- CZ 11 inorganic zinc primer – 27.71 lbs/gallon

For both the paint chip transport and the head loss testing, a lower density is more conservative since it will produce a larger volume of paint chips that will more easily transport to the sump strainer. As shown above, Carboline 305 is slightly less dense; however, the coating is expected to fail with at least a minimal amount of CZ 11 attached, since it is predominantly located on the containment liner plate outside of the coatings ZOI.

5. **Describe and provide bases for coatings debris generation assumptions. For example, describe how the quantity of paint debris was determined based on ZOI size for qualified and unqualified coatings.**

Duke Response:

Unqualified Coating - Oconee has conservatively assumed that 100% of the unqualified coatings in containment will fail, whether inside or outside of a coating ZOI.

Qualified Coating - Per Section 8 of the SER, Oconee has assumed that qualified coatings have a spherical ZOI with a radius equal to 10 D. For Oconee, this assumption results in a 30 foot radius which encompasses an entire steam generator cavity including the floor. In addition, any qualified coating outside of the ZOI that is considered degraded is assumed to fail.

6. **Describe what debris characteristics were assumed, i.e., chips, particulate, size distribution and provide bases for the assumptions.**

Duke Response:

See response to Supplemental Response Content Guide Question 3.f for information on paint chip sizes used during the head loss testing. Paint chips were used based on the NRC SER information for plants that were not considered to form a "thin bed".

7. **Describe any ongoing containment coating condition assessment program.**

Duke Response:

See response to RAI Question 25.

i. Debris Source Term

The objective of the debris source term section is to identify any significant design and operational measures taken to control or reduce the plant debris source term to prevent potential adverse effects on the ECCS and CSS recirculation functions.

Provide the information requested in GL 04-02 Requested Information Item 2.(f) regarding programmatic controls taken to limit debris sources in containment.

GL 2004-02 Requested Information Item 2(f)
A description of the existing or planned programmatic controls that will ensure that potential sources of debris introduced into containment (e.g., insulations, signs, coatings, and foreign materials) will be assessed for potential adverse effects on the ECCS and CSS recirculation functions. Addressees may reference their responses to GL 98-04, "Potential for Degradation of the Emergency Core Cooling System and the Containment Spray System after a Loss-of-Coolant Accident Because of Construction and Protective Coating Deficiencies and Foreign Material in Containment", to the extent that their responses address these specific foreign material control issues.

In responding to GL 2004-02 Requested Information Item 2(f), provide the following:

1. **A summary of the containment housekeeping programmatic controls in place to control or reduce the latent debris burden. Specifically for RMI/low fiber plants, provide a description of programmatic controls to maintain the latent debris fiber source term into the future to ensure assumptions and conclusions regarding inability to form a thin bed of fibrous debris remain valid.**

Duke Response:

Nuclear System Directive 104 is the program document for Materiel Condition, Housekeeping, Cleanliness, and Foreign Material Exclusion. The directive requires that containment materiel condition and housekeeping shall be maintained continuously to support a state of ECCS readiness. This directive designates the reactor building as a "housekeeping level 4" area in Modes 5, 6, and No Mode. Cleanliness standards for a "housekeeping level 4" area require that accumulation of dust, dirt, and trash are not permitted. Eating, drinking, chewing gum, and use of tobacco products are prohibited in these areas as well. The outage supervisor or job sponsor is responsible for maintaining housekeeping in containment to minimize ECCS operability concerns. In Modes 1-4, containment is designated a FME Level 3 Zone. During these modes, logging of materials and tools into and out of the reactor building is required by NSD-104 and implemented by Site Directive 1.3.9, "Containment Materiel Control". These controls include detailed logging of items taken into the reactor building, verification of their subsequent removal, or documented justification for leaving any items in the building.

In addition to these controls, Maintenance personnel also perform a cleanup of containment prior to entry into Mode 4 on startup from refueling outages. A containment exit inspection procedure is implemented after every containment entry at power and during each refueling outage, prior to entering Mode 4 on startup. The primary purpose of this procedure is to ensure that no loose debris (rags, trash, clothing, etc.) is present in the containment which could be transported to the emergency sump and cause restriction of the ECCS pump suctions during LOCA conditions. Performance of these inspections is required by Selected Licensee Commitment 16.6.11.

Though not programmatically controlled, Oconee's current practice is to perform a building washdown at the beginning and the end of each refueling outage. This washdown helps to maintain the level of latent debris low and within the assumptions for GSI-191.

2. **A summary of the foreign material exclusion programmatic controls in place to control the introduction of foreign material into the containment.**

Duke Response:

See response to item 1 above.

3. **A description of how permanent plant changes inside containment are programmatically controlled so as to not change the analytical assumptions and numerical inputs of the licensee analyses supporting the conclusion that the reactor plant remains in compliance with 10CFR50.46 and related regulatory requirements.**

Duke Response:

The design change process (Engineering Directives Manual 601) requires that reviewers of design changes specifically consider whether proposed modification packages contain design features which could have impact to the RBES. Specific mention is made that changes to piping/equipment insulation in containment may impact the containment sump analysis. Other items specifically called out for consideration of impacts to RBES function are:

- Addition of aluminum or zinc to containment.
- Introduction of insulation, filters, film-type materials, or any other fibrous materials to containment.
- Materials, chemicals, or coatings applied to SSCs inside containment.
- Modifications that introduce small flow passages in the Post-LOCA sump recirculation flow path.
- Material changes that could affect wear or chemical interactions when exposed to sump recirculation flow.
- Changes that could alter the flow rates in the sump recirculation flow path.

Independent of the design change process, Work Standard IG/5000/001 (Direction for the Selection, Installation, and Handling of Insulation) requires that fibrous insulation installed in the Reactor Building be covered with mastic or metal jacketing. The mastic covering was tested to verify that significant erosion would not occur in a post-accident environment. (See response to Audit Open Item 3.3-1.)

In addition, ONS Nuclear System Directive 503 (Station Label and Sign Standards) states that materials, size, and means of attachment of signs/labels inside containment meet all regulatory and administrative requirements related to ECCS Containment Sump Screen fouling and chemistry acceptance standards. Materials of construction for labels/signs inside the reactor building are limited to stainless steel and porcelain covered stainless steel. Methods of attachment are restricted to stainless steel tie wraps, stainless steel cable, stainless steel crimps, and approved adhesives (with supporting analysis).

4. **A description of how maintenance activities including associated temporary changes are assessed and managed in accordance with the Maintenance Rule, 10CFR50.65.**

Duke Response:

At Oconee, temporary changes are included within the design change process as described in Engineering Directives Manual 601. As discussed in the previous question, this process requires reviewers to specifically consider whether proposed changes contain design features which could have an impact on the RBES.

For maintenance activities that are not included within the design change process, Nuclear System Directive 104 and Site Directive 1.3.9 (discussed in Supplemental Response Content Guide Question/Item 3.i.1) ensure that appropriate housekeeping and FME controls are in place and maintained.

If any of the following suggested design and operational refinements given in the guidance report (guidance report, Section 5) and SE (SE, Section 5 .1) were used, summarize the application of the refinements.

5. **Recent or planned insulation change-outs in the containment which will reduce the debris burden at the sump strainers**

Duke Response:

ONS has removed fibrous insulation from Reactor Building Auxiliary Coolers 1B, 2B, and 3B (approximately 16.5 cu. ft. per containment) in response to GL 2004-02. There are no additional insulation changes planned for ONS.

6. **Any actions taken to modify existing insulation (e.g., jacketing or banding) to reduce the debris burden at the sump strainers**

Duke Response:

ONS has no plans for modifications to existing insulation to further reduce the debris burden at the sump strainers.

7. **Modifications to equipment or systems conducted to reduce the debris burden at the sump strainers**

Duke Response:

ONS has no plans for further debris source term reductions to reduce the debris burden at the sump strainers.

8. **Actions taken to modify or improve the containment coatings program**

Duke Response:

Refer to RAI Question 25 for coatings program enhancements.

j. Screen Modification Package

The objective of the screen modification package section is to provide a basic description of the sump screen modification.

1. **Provide a description of the major features of the sump screen design modification.**

Duke Response:

The sump screen modification package involved the following elements:

1- Removal of the existing trash racks and screens from the RBES and addition of strainer assemblies with much larger surface areas and slightly smaller strainer openings. The existing trash racks had a surface area of approximately 50 sq. ft. and the screen had a surface area of approximately 100 sq. ft. The replacement strainers have a filtering surface area of more than 4800 sq. ft.on Unit 1 and 5200 sq. ft. on Units 2 and 3.

2- The LPI suction piping containment isolation valve test blank flanges were redesigned and relocated. The test flanges were permanently installed directly above or in front of the sump outlet pipe flanges to serve as flow impingement plates if backflow to the RBES were to occur.

2. **Provide a list of any modifications, such as reroute of piping and other components, relocation of supports, addition of whip restraints and missile shields, etc., necessitated by the sump strainer modifications.**

Duke Response:

The sump strainer modification resulted in two additional changes. For all 3 Oconee units the emergency sump level instrumentation was relocated from the two sides of the sump pit. Both instruments are now located at one end of the sump pit to reduce the potential for damage to the instruments and to allow additional clearance along the sides of the sump pit for the new strainer configuration.

k. Sump Structural Analysis

The objective of the sump structural analysis section is to verify the structural adequacy of the sump strainer including seismic loads and loads due to differential pressure, missiles, and jet forces.

Duke Response:

The RBES Strainers have been subjected to a NRC audit of corrective actions for GL 2004-02. The NRC audit included a review of the structural aspects, as described herein, of the strainer and found the strainer adequate. No open items were identified. No aspect of the RBES Strainer structure has changed since the NRC audit; therefore the conclusion stated therein remains the same.

Provide the information requested in GL 2004-02 Requested Information Item 2(d)(vii).

GL 2004-02 Requested Information Item 2(d)(vii)
Verification that the strength of the trash racks is adequate to protect the debris screens from missiles and other large debris. The submittal should also provide verification that the trash racks and sump screens are capable of withstanding the loads imposed by expanding jets, missiles, the accumulation of debris, and pressure differentials caused by post-LOCA blockage under flow conditions.

1. **Summarize the design inputs, design codes, loads, and load combinations utilized for the sump strainer structural analysis.**

Duke Response:

The new RBES Strainer was constructed in the same location as the original strainer. ONS did not incorporate a trash rack in the new strainer design. The new strainer consists of two (2) rows or banks of CCI (Control Components Incorporated) "pocket" cassette strainers aligned along each side of the eighteen (18) foot length of the sump. Each bank of strainer cassettes has a supporting structural frame that is anchored to the sump floor. The frames consist of anchor plates, lower support structural elements, pipe columns, upper "T" beam support and lateral braces. Each bank has grating over its top. A cross-sectional conceptual drawing is shown below in Figure 3k-1. The space between each bank of wall cassette strainers is covered with removable checkered plate subfloor segments (see Figures 3k-2 & 3k-3). Each bank of strainer cassettes and the subfloor is sealed at the sump perimeter (sump walls) with flexible sealing elements. The existing sump level instruments were relocated to one end of the sump (see Figure 3k-3).

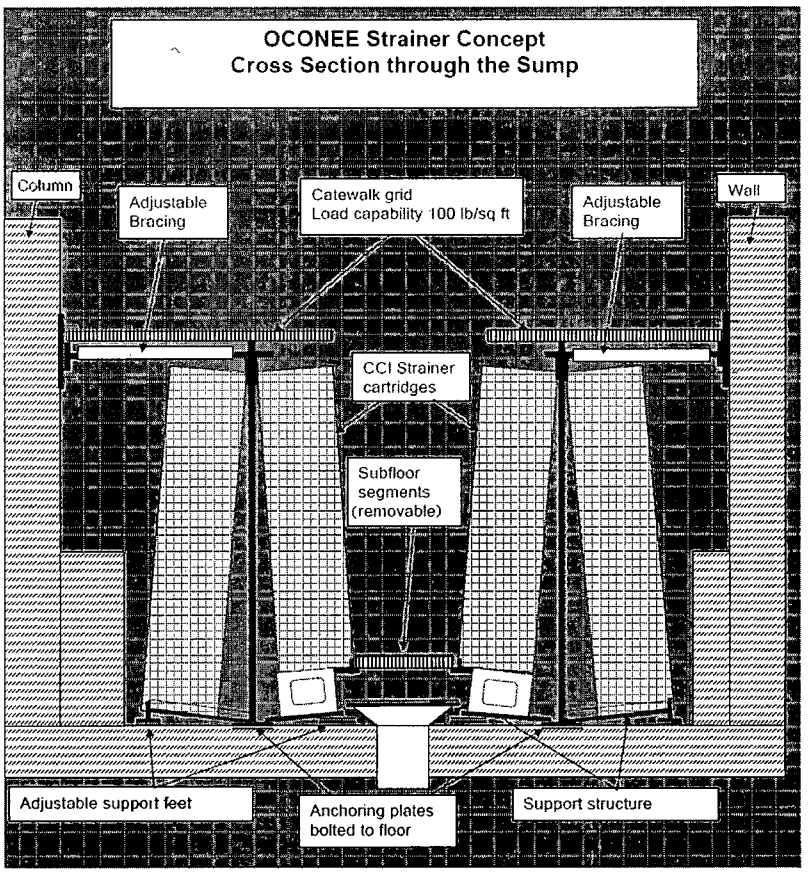
OCONEE Strainer Concept
Cross Section through the Sump
Column
Adjustable Bracing
Catewalk grid
Load capability 100 lb/sq ft
Adjustable Bracing
Wall
CCI Strainer cartridges
Subfloor segments (removable)
Adjustable support feet
Anchoring plates bolted to floor
Support structure

Figure 3k-1

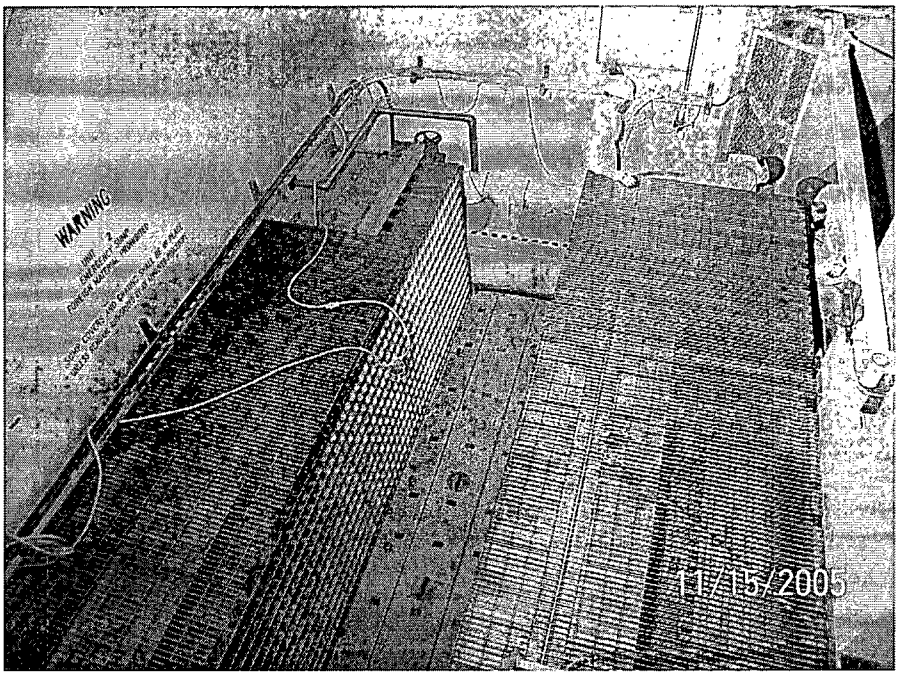

Figure 3k-2

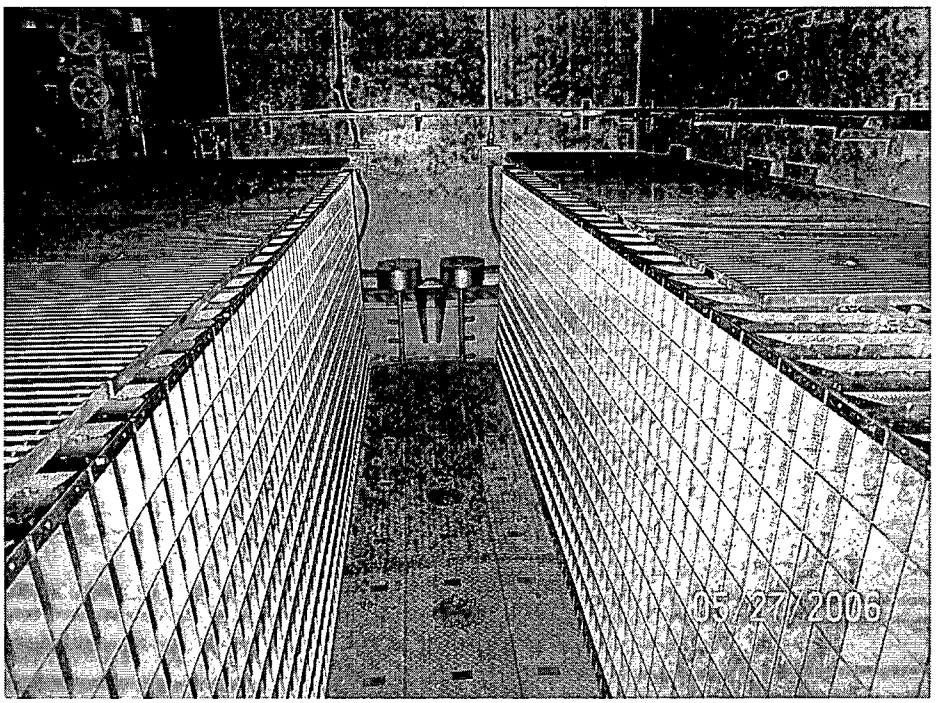

Figure 3k-3

Structural analyses were performed by CCI and Stone & Webster to qualify the new RBES Strainers that are installed in the containment recirculation sump for Units 1, 2 & 3. The structural evaluation was performed utilizing a combination of manual calculations and finite element analysis using ANSYS computer software. The loads considered in the analysis included:

- Hydraulic Differential Pressure (ΔP)
- Temperature (for evaluating material properties)
- Self Weight of Strainer Components (W)
- Debris Weight (W_D)
- Live Loads (LL) (associated with maintenance activities)
- Seismic Loads (HE) (Response Spectrum which conservatively used a maximum hypothetical earthquake defined by a 0.10 g spectrum as opposed to a design basis earthquake defined by a 0.05 g spectrum.) (Hydrodynamic water mass was considered.)

The load cases considered in the analysis were:

1) $W + LL$

2) $W + LL + HE$ (pool dry)

3) $W + W_D + \Delta P$

4) $W + W_D + \Delta P + HE$ (pool filled)

2. Summarize the structural qualification results and design margins for the various components of the sump strainer structural assembly.

Duke Response:

The Reactor Building Emergency Sump Strainer structure was analyzed by Allowable Stress Design methods pursuant to the "AISC, Manual of Steel Construction" and/or the "AISI, North American Specification for the Design of Cold Formed Steel Structural Members" as appropriate.

In order to introduce conservatism into the strainer design the following were utilized:

- The analysis utilized a differential pressure of two (2) feet across the strainer surface. The actual differential pressure for the strainer was determined to be less than one tenth (0.1) foot.
- Oconee's license permits the combination of only one horizontal direction of earthquake with the vertical earthquake. The strainer's analysis, for Units 2 & 3, conservatively combined both horizontal directions of earthquake motion with the vertical.
- The analysis compared maximum hypothetical earthquake results to "normal" code allowable stresses.

The structural evaluations showed that all stresses were below code allowable stress limits. The evaluations concluded that the RBES Strainer structure is in accordance with Oconee's design criteria.

3. **Summarize the evaluations performed for dynamic effects such as pipe whip, jet impingement, and missile impacts associated with high energy line breaks (as applicable).**

Duke Response:

Pipe whip and jet impingement due to the rupture of high energy piping were evaluated. Stone & Webster performed a walkdown of the areas at and adjacent to the RBES strainer to identify piping that could, if broken, potentially damage the RBES Strainer. Stone & Webster utilized the walkdown information in conjunction with other design information to perform this evaluation. Based on this evaluation it was concluded that there were no pipe whip or jet impingement concerns.

The rupture of high energy piping and components could also produce missiles that could damage the RBES Strainer. Stone & Webster utilized the walkdown information in conjunction with other plant information to identify any valve stems, valve bonnets, instrument thimbles and nuts/bolts that could become missiles and potentially damage the RBES Strainer. Based on this evaluation, it was determined that the RBES Strainers would not be compromised by missiles.

4. **If a backflushing strategy is credited, provide a summary statement regarding the sump strainer structural analysis considering reverse flow.**

Duke Response:

Strainer backflushing with reverse flow is not a strategy that is credited for accident mitigation at ONS. Therefore, the structural analysis does not address loading from differential pressure created by reverse flow from a planned backflushing operation. The structural evaluations showed that all stresses were below code allowable limits. These evaluations concluded that the RBES Strainer structure was in accordance with Oconee's design criteria.

It was determined that inadvertent backflow may be possible under certain circumstances. Therefore, inadvertent backflow was considered for the RBES and its strainer's design. To prevent direct impingement of back flow on the strainer's structure, a circular stainless steel plate is mounted in front of each of the RBES's recirculation inlets. If inadvertent backflow does occur from the BWST or RCS, these deflector plates prevent direct impingement onto the strainer structure. On the vertical inlets, the deflector plates are mounted to the recirculation inlet's flanges. On the horizontal inlet, the deflector plate is mounted to the RBES's concrete floor. The deflector plates and their associated supports/bolting were analyzed for all flow and seismic loadings.

In summary, the RBES for Units 1, 2 & 3 for Oconee have been evaluated and found structurally adequate.

l. Upstream Effects

The objective of the upstream effects assessment is to evaluate the flow paths upstream of the containment sump for holdup of inventory which could reduce flow to and possibly starve the sump.

Duke Response:

Oconee Nuclear Station was subject to an NRC audit of corrective actions for GL 2004-02 in the spring of 2007. The NRC reviewed the subject area of upstream effects resulting in one open item (see response to Audit Open Item 5.2-1 / RAI Question 35).

Provide a summary of the upstream effects evaluation including the information requested in GL 2004-02 Requested Information Item 2(d)(iv).

GL 2004-02 Requested Information Item 2(d)(iv)
The basis for concluding that the water inventory required to ensure adequate ECCS or CSS recirculation would not be held up or diverted by debris blockage at choke-points in containment recirculation sump return flow paths.

1. **Summarize the evaluation of the flow paths from the postulated break locations and containment spray washdown to identify potential choke points in the flow field upstream of the sump.**

Duke Response:

ONS has B&W-designed large dry containments which are mostly uncompartmentalized. The following areas were evaluated for potential water holdup:

- Fuel Transfer Canal

  See responses to RAI Questions 35a and 35e and Audit Open Item 4.1-1 for a summary of this choke point evaluation.

- RV Annulus/RV Cavity Areas

  See response to Audit Open Item 5.2-1 for a summary of these choke point evaluations.

- Incore Instrumentation Tank

See response to Audit Open Item 4.1-1 for a summary of this choke point evaluation.

2. **Summarize measures taken to mitigate potential choke points.**

Duke Response:

ONS has taken no special measures to mitigate potential choke points. Choke points have been evaluated and accounted for in the minimum water level analyses performed for the site. See item 1 above for a summary of those evaluations.

3. **Summarize the evaluation of water holdup at installed curbs and/or debris interceptors.**

Duke Response:

ONS does not have debris interceptors in the refueling canal during power operation. As documented in the water level calc, there are no curbs identified that would provide significant water holdup.

4. **Describe how potential blockage of reactor cavity and refueling cavity drains has been evaluated, including likelihood of blockage and amount of expected holdup.**

Duke Response:

See response to Audit Open Item 5.2-1 for a summary of these choke point evaluations.

m. Downstream effects - Components and Systems

The objective of the downstream effects, components and systems section is to evaluate the effects of debris carried downstream of the containment sump screen on the function of the ECCS and CSS in terms of potential wear of components and blockage of flow streams. Provide the information requested in GL 04-02 Requested Information Item 2.(d)(v) and 2.(d)(vi) regarding blockage, plugging, and wear at restrictions and close tolerance locations in the ECCS and CSS downstream of the sump.

GL 2004-02 Requested Information Item 2(d)(v)
The basis for concluding that inadequate core or containment cooling would not result due to debris blockage at flow restrictions in the ECCS and CSS flow paths downstream of the sump screen, (e.g., a HPSI throttle valve, pump bearings and seals, fuel assembly inlet debris screen, or containment spray nozzles). The discussion should consider the adequacy of the sump screen's mesh spacing and state the basis for concluding that adverse gaps or breaches are not present on the screen surface.

Duke Response:

The Oconee Reactor Building Emergency Sump (RBES) Strainer is constructed of perforated stainless steel with a maximum perforation size of 2.1 mm (0.083 in). Technical Specification required inspections are performed during each refueling outage to check for gaps. Any gaps or breaches larger than 1.0 mm (0.039 in) generally or 1.5 mm (0.059 in) locally are promptly repaired.

Based on the largest hole size in the Oconee RBES strainer and guidance in WCAP 16406-P, rev. 1, the maximum particulate width assumed in component plugging analyses is 2.3 mm (0.091 in). All valves, orifices, nozzles, and flow restrictors in the ECCS and Building Spray (BS) flow paths were evaluated to determine if any had flow passages smaller than 2.3 mm. The HPI throttle valves (1/2/3 HP-26/27/409/410), LPI flow restrictors (1/2/3 LP-FE-6/7) as well as the ECCS and BS pump seal flush orifices and cyclone separators were the only components that were found to have a potential for plugging. The High Pressure Injection (HPI) throttle valves and Low Pressure Injection (LPI) flow restrictors were flow tested by the Original Equipment Manufacturer (OEM), Control Components Inc., with simulated LOCA debris to verify adequate flow capacity. Throttle valve and flow restrictor test results and subsequent system hydraulic analyses confirmed that the HPI and LPI systems would maintain adequate flow capacity while passing debris-laden fluid. Modifications are currently being designed (with input from the pump OEM – Flowserve) to replace the ECCS and BS cyclone separators with models that have been successfully tested with debris-laden fluid and to replace the seal flush orifices with orifices that have a larger flow passage. These modifications will ensure that ECCS and BS pump seals have adequate cooling when the pumps are handling debris-laden fluid.

GL 2004-02 Requested Information Item 2(d)(vi)
Verification that the close-tolerance subcomponents in pumps, valves and other ECCS and CSS components are not susceptible to plugging or excessive wear due to extended post-accident operation with debris-laden fluids.

1. **If NRC-approved methods were used (e.g., WCAP 16406-P, rev. 1, with accompanying NRC SE), briefly summarize the application of the methods. Indicate where the approved methods were not used or exceptions were taken, and summarize the evaluation of those areas.**

Duke Response:

Plugging and wear criteria from WCAP 16406-P, rev. 1, (WCAP) were used to evaluate components with small flow passages.

For pumps the wear of impeller hubs and suction and discharge wear rings was evaluated using abrasive wear models from the WCAP assuming a constant debris concentration. For multistage pumps (HPI Pumps), the wear of the suction wear rings was calculated using the free-flowing abrasive wear model (without debris depletion) and the wear of the discharge wear rings was calculated using the packing type wear model (with conservative Archard wear coefficient values) until the diametral running clearance increased to 0.050 inches, at which point subsequent wear was evaluated using the free-flowing abrasive wear model. For single-stage pumps (LPI and BS Pumps), suction and discharge wear ring wear was calculated using the packing type wear model (with conservative Archard wear coefficient values) until the diametral running clearance increased to 0.050 inches, at which point subsequent wear was evaluated using the free-flowing abrasive wear model (without debris depletion).

Due to the soft wear rings and predicted clearance changes in LPI and BS pumps, MPR Associates was contracted to develop a methodology for predicting degraded pump hydraulic performance based on wear ring clearance changes for single-stage pumps. The LPI and BS systems were then hydraulically reevaluated to ensure that adequate core injection and containment spray flows could be achieved with wear-degraded pumps and partially plugged flow restrictors (partially plugged flow restrictors apply only to the LPI system). The two HPI pump variants (23-stage design and 24-stage design) currently installed at ONS were evaluated to ensure wear remained within the acceptance criteria specified in the WCAP for multistage pumps.

Nozzles, throttle valves, and orifices were evaluated for wear and plugging based on methodologies and criteria established in the WCAP. Wear was evaluated using the erosive wear model from the WCAP assuming a constant debris concentration. Plugging was evaluated based on a limiting particulate size of 2.3 mm (110% of the hole size in the Oconee Reactor Building Emergency Sump Strainer). Due to the complex nature of the trim in the HPI throttle valves (1/2/3 HP-26/27/409/410) and LPI flow restrictors (1/2/3 LPI-FE-6/7), the plugging potential could not be analytically determined. These valves and flow restrictors were tested by the OEM, Control Components Inc., for operation with debris-laden fluid. The OEM also conducted analytical wear analysis based on the methodologies and assumptions previously described.

2. **Provide a summary and conclusions of downstream evaluations.**

Duke Response:

The 23-stage HPI pumps, with their hardened wear rings and impeller hubs, showed acceptable levels of wear. However, the 24-stage pumps, with their relatively soft wear rings and impeller hubs, showed unacceptable levels of wear. No other component evaluated was found to have excessive wear (based on component wear criteria defined in the WCAP).

The only components determined to be susceptible to plugging are the ECCS and BS pump seal flush orifices and cyclone separators. All other nozzles (including containment spray nozzles), throttle valves, and orifices were found to not be susceptible to plugging.

3. **Provide a summary of design or operational changes made as a result of downstream evaluations.**

Duke Response:

No operational changes were made as a result of the downstream evaluations. However, the decision was made to pursue modifications to replace the ECCS and BS pump seal flush orifices and cyclone separators with orifices that have larger flow passages and cyclone separators that have been successfully tested with debris-laden fluid. HPI pump internals (rotating elements including wear-susceptible parts such as impeller hubs and wear rings) have been replaced on eight of nine HPI pumps using harder materials to provide the necessary wear resistance. In addition, the one remaining 24-stage HPI pump (3A) will be replaced with a 23-stage HPI pump.

n. Downstream Effects - Fuel and Vessel

The objective of the downstream effects, fuel and vessel section is to evaluate the effects that debris carried downstream of the containment sump screen and into the reactor vessel has on core cooling.

1. **Show that the in-vessel effects evaluation is consistent with, or bounded by, the industry generic guidance (WCAP 16793-NP, rev. 0), as modified by NRC staff comments on that document. Briefly summarize the application of the methods. Indicate where the WCAP methods were not used or exceptions were taken, and summarize the evaluation of those areas.**

Duke Response:

On February 6, 2008, Duke received a letter from NRC transmitting a draft set of Conditions and Limitations on WCAP 16793-NP, rev. 0. In the interest of completeness and accuracy, Duke has established a position that these draft conditions and limitations will not be addressed in this submittal. In order to give the NRC's comments fair and complete attention, Duke will await receipt of the final approved NRC comments on WCAP 16793-NP, rev. 0. Within 90 days of receipt of the final NRC conditions and limitations, Duke will submit a supplement to this response addressing NRC concerns.

For the purposes of this submittal, Oconee has followed the industry guidance presented in WCAP 16793-NP, rev. 0, as supplemented by additional guidance on the use of LOCADM software (OG-07-534) issued by PWR Owner's Group on December 14, 2007. Within this WCAP, Westinghouse has identified three areas of concern for in-vessel downstream effects:

1. Evaluation of fuel clad temperature response to blockage at the inlet to the core.
2. Evaluation of fuel clad temperature response to local blockages or chemical precipitation on fuel clad surface.
3. Evaluation of chemical effects in the core region, including potential for plate-out on fuel cladding.

The WCAP has provided bounding analyses for the first two items that can be used by utilities to address these concerns without additional plant-specific analysis. Westinghouse has also provided an extension of the chemical effects method developed in WCAP 16530-NP, rev. 0, that can be used by utilities to answer item number three above. Each of the above concerns is addressed below:

1. Evaluation of fuel clad temperature responses to blockage at the inlet to the core.

   WCAP 16793-NP, rev. 0, documents computer simulations that were performed to demonstrate acceptable flow could be assured in a post-LBLOCA environment. The analysis was performed using assumptions that were designed to bound the entire United States PWR fleet. In order to accomplish this goal the following modeling assumption were made:

   - The limiting break was chosen to maximize the debris transported to the core and to minimize the flow delivered to the core inlet. This was accomplished by assuming hot leg break flow rates for debris transport and cold leg break rates for the flow delivered to the core inlet.
   - The limiting vessel design was chosen from the Westinghouse, CE, and B&W types. The design chosen was the barrel/baffle downflow vessel and it was shown to bound all of the designs.

   The effects of 82% and 99.4% blockage of the core inlet flow area were determined. The acceptance criteria for this analysis were based on the boiloff rate. Essentially it was shown that the flow rate delivered to the core was greater than the boiloff rate which ensures that the core would remain cool and covered following a LBLOCA with the assumed blockage amounts.

   In addition to the modeling, the WCAP provides testing observations that demonstrate that the size and quantity of debris that bypasses the RBES strainers will not lead to blockage of the core inlet. The most significant of these is the quantity of fiber that reaches the strainer. The WCAP states that the amount of fiber that passes through the replacement strainers is on the order of 1 ft^3 per 1000 ft^2 of sump strainer area or less. Based on Oconee-specific fiber bypass testing, Oconee expects < 1% of the available fiber to bypass the RBES strainers. Based on the total fiber value of 8.6 ft^3 and the strainer surface area of approximately 5000 ft^2 for ONS, the expected bypass amount is 0.086 ft^3. This converts to 0.0172 ft^3 of fiber per 1000 ft^2 of strainer area.

   Conclusions:

   Based on the work documented in the WCAP and the very small amount of fiber that will reach the core inlet, the results of the WCAP are considered applicable for Oconee.

2. Evaluation of fuel clad temperature response to local blockages or chemical precipitation on fuel clad surface.

   For this evaluation, there were two fuel assembly locations reviewed. First, an ANSYS model was developed to determine the maximum clad heatup behind the fuel grids. Second, an engineering evaluation was performed to determine the maximum clad heatup between grids. For these evaluations the acceptance criteria was set at 800 F.

   Clad Heatup behind Fuel Grids:

   For the ANSYS modeling associated with this evaluation a 12 foot long, 0.36-inch diameter fuel rod was assumed. The following conservatisms were built into the model:

   - No convection occurs under the grids in the fuel rod assembly.
   - No flow is assumed through the debris in the grid. This is very conservative since it has been demonstrated that materials will not pack perfectly.
   - Debris thickness was varied up to 50 mils and the debris thermal conductivity was varied from a low of 0.1 BTU per hr*ft*^{o}F to a high of 0.9 BTU per hr*ft*^{o}F.
   - The temperature assumed is based on a decay heat level at time of ECCS switchover to the containment sump.
   - All debris that reaches the fuel rod is assumed to be evenly distributed over the affected area, and is modeled with uniform thermal properties.

   Clad Heatup between Grids:

   For the engineering evaluation associated with this work, a first-order approximation to the heat transfer behavior associated with the cladding was performed. The following conservatisms were built into the work:

   - The analysis only considered heat conduction in the radial direction; no axial heat conduction was assumed to occur.
   - This analysis did not assume the presence of any grid components.
   - Debris thickness was varied up to 50 mils and the debris thermal conductivity was varied from a low of 0.1 BTU per hr*ft*^{o}F to a high of 0.9 BTU per hr*ft*^{o}F.
   - The temperature assumed is based on a decay heat level at time of ECCS switchover to the containment sump.

Conclusions

Based on a review of the analyses, the results of the WCAP are considered applicable for Oconee. The one documented difference for Oconee is the assumption for the OD of the fuel rod. The WCAP performed analyses assuming a maximum of 0.422" and the Oconee fuel can be as high as 0.43". Table 4-5 of WCAP 16793-NP, rev. 0, illustrates the effect of a larger rod OD on the clad/oxide interface temperature. The table shows that a 0.006" change in OD results in a 1 degree temperature increase. Based on the information from Table 4-5, coupled with the conservative nature of the analysis, the difference is considered negligible.

It is worth noting here that the most conservative assumption from the analyses is the combination of assumed debris thickness and temperature. The temperature corresponds to that predicted at time of sump swap. At this time there will be no debris on the fuel. As the sump fluid is recirculated, the debris bed will build up; however, the temperature will decrease due to a drop-off of decay heat.

3. Evaluation of chemical effects in the core region, including potential for plate-out on fuel cladding

Post accident, when the ECCS is realigned to recirculate coolant from the containment sump, the chemical products in that coolant may be transported to the core. Once in the core, the chemical products may be deposited on fuel cladding. This deposition may affect the removal of decay heat from the fuel. Starting with the information from WCAP 16530-NP, rev. 0, as a base, a method to assess the potential for plant-specific precipitate plate-out was developed. The LOCA Deposition Analysis Model (LOCADM) was developed to enable all plants, regardless of NSSS vendor, to address the above concerns and to document the viability of long term cooling. Section 5 of WCAP 16793-NP, rev. 0, provides a summary of the method including major assumptions and features of the model. The significant output of LOCADM is the prediction of the maximum LOCA scale thickness (on the surface of the fuel rods) and the maximum fuel cladding temperature.

LOCADM considers two modes of plant operation before recirculation of the sump. In Mode 1, the reactor coolant system blows down and the reactor refills via operation of the safety injection system. During Mode 2, the reactor has been refilled, and borated water from the reactor water storage tank continues to be injected into the reactor. Coolant flows from the break during both modes, filling the sump. Mode 2 ends when recirculation from the sump begins.

LOCADM provides two options for describing flows during LOCA Modes 1 and 2. ONS chose to use option 2 which is to prefill the sump and the reactor using specific inputs for the spreadsheet and then set all flows to zero during Modes 1 and 2. The time, temperature, and pH inputs are necessary and were obtained from the Safety Analysis. The reactor vessel coolant mass input is provided by the PWROG based on plant type.

Conclusions

The WCAP provides an analytical spreadsheet that can be used by utilities to answer the potential for chemical effects in the core region. This spreadsheet (LOCADM) was run in accordance with WCAP 16793-NP, rev. 0, and the OG-07-534 additional guidance letter dated December 14, 2007. The maximum scale thickness predicted was 597 microns (23.5 mils). The maximum fuel clad temperature predicted during sump recirculation was 308 F. Thus, long term core cooling is not compromised when compared to the WCAP acceptance values of 50 mils and 800 F, respectively.

o. Chemical Effects

The objective of the chemical effects section is to evaluate the effect that chemical precipitates have on head loss and core cooling.

Provide a summary of evaluation results that show that chemical precipitates formed in the post-LOCA containment environment, either by themselves or combined with debris, do not deposit at the sump screen to the extent that an unacceptable head loss results, or deposit downstream of the sump screen to the extent that long-term core cooling is unacceptably impeded.

Content guidance for chemical effects is provided in Enclosure 3 to a letter from the NRC to NEI dated September 27, 2007 (ADAMS Accession No. ML0726007425).

Duke Response:

The analyses and testing for the following areas included the effects of chemical precipitates:

Head Loss Testing - See ONS' response to Question 3.f in the Supplemental Response Content Guide for discussion of chemical precipitates evaluation and consideration of head loss effects during head loss testing.

Structural Analysis -The debris quantities used for the structural analyses included allowances for the maximum predicted chemical precipitation. See response to Question 3.k in the Supplemental Response Content Guide for structural analysis results.

Downstream Effects Evaluation - The downstream debris blockage evaluation discussed in response to Supplemental Response Content Guide Question 3.m included chemical precipitates in the calculated particulate debris loading. Refer to Question 3.n in the Supplemental Response Content Guide for discussion of downstream chemical effects on fuel and reactor vessel.

p. Licensing Basis

The objective of the licensing basis section is to provide information regarding any changes to the plant licensing basis due to the sump evaluation or plant modifications. Provide the information requested in GL 04-02 Requested Information Item 2.(e) regarding changes to the plant licensing basis. The effective date for changes to the licensing basis should be specified. This date should correspond to that specified in the 10 CFR 50.59 evaluation for the change to the licensing basis.

GL 2004-02 Requested Information Item 2(e)
A general description of and planned schedule for any changes to the plant licensing bases resulting from any analysis or plant modifications made to ensure compliance with the regulatory requirements listed in the Applicable Regulatory Requirements section of this generic letter. Any licensing actions or exemption requests needed to support changes to the plant licensing basis should be included.

Duke Response:

A license amendment request was submitted by Duke on August 18, 2005 and supplemented on September 15, 2005, January 5, 2006 and April 6, 2006 to revise the Technical Specifications for ONS. This change requested a revision of surveillance requirements SR 3.5.2.6 and SR 3.5.3.6 to remove the references to "trash racks and screens". These terms were replaced with the term "strainers" to more accurately reflect the design configuration of the replacement sump strainers. This request was approved on November 1, 2005 for Units 1 and 2 (amendments 348 and 350 to DPR-38 and DPR-47, respectively), and on May 4, 2006 for Unit 3 (amendment 350 to DPR-55).

The ONS UFSAR does not currently address the RBES. When ONS was originally licensed, the sump design basis utilized a nonmechanistic criterion of 50% blockage of the sump screen for evaluation of sump performance to demonstrate compliance with 10CFR50.46. This will change as a result of Generic Letter 2004-02, which requires a debris-specific approach to evaluating sump performance. UFSAR changes are planned to capture licensing basis changes imposed by GL 2004-02. These will include general descriptions of the new sump strainer configuration and salient aspects of the design requirements, such as:

- Debris Generation
- Debris Transport
- Head Loss
- Downstream Effects
- Chemical Effects
- Structural Requirements
- Programmatic Requirements

New regulatory requirements and/or guidance documents will be reflected in this change, including:

- GL 2004-02 requirements for debris-specific evaluation
- NEI-04-07 Guidance Report and associated SER for debris generation, transport, head loss, and structural evaluation
- WCAP 16406-P, rev. 1, and associated SER for downstream effects evaluation
- WCAP 16530-NP, rev. 0, and associated SER for chemical effects evaluation
- WCAP 16793-NP, rev. 0, and associated SER for in-vessel chemical effects

The new licensing basis will become effective as of the completion of the final corrective actions (modifications) identified by ONS' evaluation of the requirements of NEI 04-07 and the associated SER. As noted in ONS' letters of December 18, 2007 and December 19, 2007, these modifications are expected to be completed by January 31, 2009 for Unit 1, fall 2008 refueling outage for Unit 2, and spring 2009 refueling outage for Unit 3. In accordance with requirements of 10CFR50.71e, ONS will make changes to the UFSAR in the calendar year following completion of these modifications on each unit.

Enclosure 3

AUDIT OPEN ITEM RESPONSES

Audit Open Item Responses

Open Item 3.3-1: Unjacketed Fibrous Insulation Erosion

The licensee identified that there are some piping runs and elbows insulated with unjacketed fibrous materials in the Reactor Building. The licensee had not evaluated the effect of erosion of such fibrous insulation induced by Reactor Building spray drainage.

Duke Response:

Oconee contracted with Wyle Laboratories to perform autoclave testing using a piece of insulation taken from Oconee Unit 1 Reactor Building. The test included spraying the insulation piece with borated water under expected post-accident containment temperature and pressure conditions. The test was run for a duration of 7 days which corresponds to the Building Spray system mission time. The results of the testing show that the mastic covering did not have any appreciable damage. The quantity of fibrous insulation released was < 0.0125 grams/cu.ft., which would equate to approximately 0.01 lbs when extrapolated to the insulation quantities in containment.

Open Item 3.4-1: Latent Debris Sample Size

The staff considered the number of latent debris samples taken by the licensee, at four locations within Unit 3 Reactor Building, to be inadequate for obtaining a sufficiently accurate estimate of containment latent fibrous and particulate debris masses, given the spectrum of debris buildup conditions on various Reactor Building surfaces.

Duke Response:

A latent debris sampling program has been developed and will be used for all three units starting with Unit 3 in fall 2007. This program will augment the previous samples taken and ensure that the currently assumed latent debris load is conservative. The sampling program will include a minimum of three samples per area for floors, major equipment, and cable trays.

Sampling has been completed for Unit 3 utilizing the revised sampling program. Based upon the samples from Unit 3, the estimated quantity of latent debris on horizontal surfaces is 66.65 lbs. Therefore, the initial sampling result (79.2 lbs total) remains bounding.

Open Item 3.7-1: Water Hold up and CFT Volume Effects on Minimum Water Level

The licensee did not consider two sources of water holdup that could reduce the calculated water level. These sources include (1) holdup of spray water droplets in the Reactor Building atmosphere, and (2) holdup of water as condensate film on surfaces of the Reactor Building. The licensee has also not documented a basis for its conclusion that the full CFT volume would be available early during a small-break LOCA.

Duke Response:

Potential Water Holdup

The two sources of potential water holdup documented in the Open Item have been addressed within the unit-specific water level calculations. In each analysis, a conservative value was determined as follows:

Holdup in the atmosphere - For this analysis, a bounding value of the droplet terminal velocity was determined based on industry data using rain drops. By using the terminal velocity (13.2 ft/second), the amount of time needed for a drop to reach the basement was determined to be 12.6 seconds. By using this value and a maximum value for the Reactor Building Spray flow (2400 gpm), a total volume of water potentially in the atmosphere is calculated to be 67.4 ft^3.

Condensate - For this analysis, a bounding value for the thickness of the condensation layer was assumed as 1/32 inch. The effective area was taken from the walkdown reports generated as part of the GSI-191 resolution. The area was determined in these reports in order to estimate the amount of latent debris; however, it will also be used for this assessment. For conservatism, the surface areas of both the horizontal and vertical surface areas were used for a total of 47,849 ft^2. Based on these values, a total volume of water potentially in the form of condensation was calculated to be 124.6 ft^3.

Within the analyses, the water level is determined by dividing the total water available by the surface area of the floor. The calculated number is then rounded down for conservatism. The previous water level was determined to be 4.469 feet for a reported number of 4.4 feet. After reducing the available water due to the potential issues discussed above, the water level is now estimated to be 4.447 feet. As can be seen, the new value will still be rounded down to 4.4 feet which demonstrates that these two issues have no effect on the minimum containment water level following a Large Break LOCA.

Small Break LOCA

As discussed within the Open Item, the minimum water level calculations assume that the volume within the Core Flood Tanks is dumped to the Reactor Building basement. The volume assumed to dump is based on the Technical Specification minimum volume. The calculation also documents that the calculated water level is based on a Large Break LOCA and should not be assumed to apply to all accidents. This is the case for certain Small Break LOCA's since the Reactor Coolant System pressure may remain greater than the CFT pressure for some amount of time after the accident. The minimum water level analyses have been performed to provide the minimum level value for use in the Low Pressure Injection and Building Spray Pump NPSH analyses. These NPSH analyses conservatively maximize flow through the applicable pumps by minimizing the downstream pressure (0 psi RCS pressure assumed). The Reactor Building Emergency Sump water temperature is also maximized for conservatism in the NPSH analyses. Both of these assumptions are characterized by a Large Break LOCA. It is clear from inspection that a bounding NPSH analysis is produced by using LBLOCA assumptions for downstream pressure, Reactor Building Emergency Sump (RBES) water temperature, and minimum water level. The following lists the expected differences if SBLOCA assumptions were used:

- By assuming the Core Flood Tanks do not dump during a SBLOCA, the minimum water level analysis is reduced from a rounded value of 4.4 feet to 4.2 feet. While this is possible, it would be limited to a very narrow spectrum of break sizes and its impact on ECCS or BS pump performance in the sump recirculation mode of operation would be negligible.
- SBLOCA's that result in RCS pressure greater than CFT pressure will be characterized by no direct LPI injection flow since the LPI pump shutoff head is approximately 200 psi. In this scenario, the LPI system would still be used to provide flow to the HPI system in a series or "piggyback" alignment. During this mode of operation, the maximum flow delivered by the LPI system is limited to 1050 gpm. This value is much less than the total LPI flow (>3000 gpm) predicted during the bounding NPSH analysis. A review of the LPI pump curve shows that the reduced flow results in a reduction in NPSHr that more than compensates for the loss in NPSHa due to the lower reactor building (RB) water level.
- Based on the fact that there is a common LPI/BS RBES suction line, the reduction in LPI flow for a SBLOCA will result in reduced friction losses and an increase in NPSHa. The general rule is half the flow will produce one fourth of the friction losses. It is expected that this increase in NPSHa will more than compensate for any decrease due to the loss of the CFT volume contribution.
- SBLOCAs typically produce peak sump temperatures well below that of LBLOCAs. A single degree of reduced temperature (e.g., 239 F vs 240 F) would result in an increase of more than a foot of head due to the lower vapor pressure. Therefore, even if BS system is actuated, the gain in available NPSH (due to lower vapor pressure) more than compensates for the reduced RB water level.

Open Item 3.8-1: Justify Coatings Visual Assessment

The licensee relies on visual inspection as part of their qualified coatings assessment program. The use of visual inspection to adequately identify degraded qualified coatings has been challenged by the staff. At the time of this audit the industry had not verified that visual assessment was an acceptable method for identifying degraded qualified coatings.

Duke Response:

See response to Request for Additional Information (RAI) Question 25c.

Open Item 4.1-1: Potential for Drainage Path Blockage as a Result of Reactor Building Washdown

The licensee's procedures do not contain adequate precautions to ensure that containment washdowns do not result in debris entering and clogging fluid drainage paths in the containment upstream of the strainers.

Duke Response:

ONS has Babcock and Wilcox designed Reactor Buildings. These are large dry designs which are not highly compartmentalized. Fluid drainage paths of concern at ONS would include the Fuel Transfer Canal (FTC) deep end, the Reactor Vessel (RV) Annulus, the RV Cavity, and the Incore Instrumentation Tanks. Blockage of floor drains is not a concern due to the extensive use of grating on all floor elevations above the basement, which precludes the accumulation and retention of significant volumes of water.

ONS uses a contractor to perform the washdowns in the Reactor Building (RB). The contractor controls the execution of Reactor Building washdown activities using Job Guides that they have developed. Specific job guides have been developed for the Fuel Transfer Canal deep end, the Fuel Transfer Canal shallow end, and the Incore Instrumentation Tanks.

The FTC deep end washdown job guide includes the use of basket strainers during washdown activities, removal of the basket strainers after washdown, and a flush of the deep end drains following the strainer removal. The guide also requires verification that the drain isolation valves are fully open to ensure a good flush.

The FTC shallow end washdown job guide provides for performing this activity while the RV seal plate is in place. In this configuration, the vessel annulus, vessel cavity and associated drains are not exposed to the washdown effluent or debris. All of the debris produced from the FTC shallow end washdown is washed to the FTC deep end to be captured by the strainer baskets in the deep end drains.

The incore tank washdown activity washes debris to a 3-inch drain line with a 3-by-8-inch reducer and an 8-inch perforated drain cover on the tank floor. The drain cover has 1/4-inch holes on an 8-inch diameter circle. The drain isolation valves are verified fully open prior to the washdown to ensure full flow and effective draining. When washdown of the incore tank is complete, all excess water and debris is removed from the tank floor by vacuuming and/or squeegee. After water and debris have been removed, walls, duct work, incore guides, and the floor area are wiped down with lint-free rags and squeegees. These measures effectively ensure that washdown activities do not result in debris entering and clogging this fluid drainage path. In addition to this, there are other openings in this tank which provide additional capacity for draining during power operation. For example, there are 8 sleeves in the bottom of the tank, each 8 inches in diameter and extending 6 inches above the floor. These sleeves are sealed with caps when the tank is filled, but open when incore work is complete. The open sleeves would be more than adequate to drain any water that might accumulate in the event of a clogged drain. This effectively limits the water level in the tank to 6 inches. At this level, the inventory in the tank would be about 77 cu. ft., and the reduction in post-accident RB water level would be 0.009 ft., which is clearly insignificant. Based upon the discussion above, water retention in the incore tanks is neither expected nor significant if it were to occur.

Open Item 5.2-1: Potential for Blockage or Obstruction of Drainage Flow Paths.

The licensee did not provide sufficient information for the staff to conclude that water hold up in the refueling canal and reactor cavity volumes due to debris blockage of drainage flow paths would not be a concern for Oconee Nuclear Station. The staff noted that the licensee should consider the potential for these flow paths to be blocked both by (1) one or more large pieces of debris and (2) an accumulation of smaller pieces of debris.

Duke Response:

Blockage potential for the refueling canal is discussed in ONS response to RAI Questions 35a and 35e. The reactor cavity is not deemed to be susceptible to break-generated debris blockage because the RCS piping and debris sources are almost entirely located within the steam generator cavities. For breaks within the steam generator cavities, the cavity walls effectively shield the reactor cavity from this debris. The only debris from these breaks which could possibly be capable of reaching the vessel cavity would be that which was blown by the break jet up through the floor grating on the fourth-floor level of containment and falling by gravity onto the Fuel Transfer Canal shallow end floor. Debris can only enter the vessel annulus area from above, passing through the vessel cavity seal area. This seal opening is a circular gap approximately one inch wide and approximately 55 ft in circumference. Thus the area available for debris entry is significantly limited and there is no preferential flow toward the vessel annulus. Should some debris find its way into the cavity (annulus) area, there are three floor drains in this area as well. Blockage of all of these drains in this manner is not deemed to be credible.

Open Item 5.3-1: Downstream Effects-Core Blockage

Although downstream evaluations were in progress during the audit, the licensee has not made any final conclusions as to whether the cores at Oconee could be blocked by debris following a LOCA, and this area is incomplete.

Duke Response:

Oconee has followed the industry guidance presented in WCAP 16793-NP, rev. 0,. Within this report, Westinghouse has identified three areas of concern for in-vessel downstream effects:

1. Evaluation of fuel clad temperature response to blockage at the inlet to the core.
2. Evaluation of fuel clad temperature response to local blockages or chemical precipitation on fuel clad surface.
3. Evaluation of chemical effects in the core region, including potential for plate-out on fuel cladding.

The WCAP has provided bounding analyses for the first two items that can be used by utilities to address these concerns without additional plant-specific analysis. Oconee has reviewed these analyses and concluded that they are applicable to Oconee's plant configuration. Westinghouse has also provided an extension of the chemical effects method developed in WCAP 16530-NP, rev. 0, that can be use by utilities to answer item number three above. Oconee has utilized this tool and determined that the acceptance criteria (<50 mil scale thickness and <800 F maximum fuel temperature) have been met. Specifically, Oconee has calculated a 23.5 mil scale thickness and a maximum fuel temperature of 308 F.

Open Item 5.3-2: Downstream Effects Evaluations Preliminary

The licensee evaluations of the downstream effects of debris on systems and components are preliminary; based in part on the generic methodology of WCAP-16406-P which is under review by the NRC staff. Conclusions and findings of the staff review need to be applied to the Oconee Nuclear Station evaluation of post-LOCA downstream effects.

Duke Response:

Oconee has revised its Downstream Effects Evaluation based on guidance in WCAP 16406-P, rev. 1, WCAP 16793-NP, rev. 0 and in the NRC's draft Safety Evaluation Report (SER) for WCAP 16406-P, rev. 1. The scope of the analysis now includes ex-vessel and in-vessel downstream effects. More specifically, the following changes were made for wear analyses of ECCS pumps:

- Wear ring wear for single-stage pumps (LPI and BS) was modeled using the Archard packing type wear model for wear gaps up to 0.050 inch diametral clearance. Wear beyond 0.050 inch diametral clearance (if predicted to occur) was modeled using the free-flowing abrasive wear model.
- Discharge wear ring wear for multistage pumps (HPI) was modeled using the Archard packing type wear model for wear gaps up to 0.050 inch diametral clearance. Wear beyond 0.050 inch diametral clearance (if predicted to occur) was modeled using the free-flowing abrasive wear model. Suction wear ring wear was modeled using the free-flowing abrasive wear model.
- A consultant (MPR Associates) was hired to develop a methodology for predicting wear-degraded pump performance for single-stage pumps.
- HPI throttle valves and LPI flow restrictors were debris tested by the Original Equipment Manufacturer (Control Components, Inc.) to determine:
  - susceptibility to plugging
  - potential hydraulic effects of partial plugging.
- A calculation was performed to verify the adequacy of partially plugged HPI throttle valves to:
  - Limit HPI flow to prevent pump runout at low Reactor Coolant System (RCS) pressures assuming strong HPI pump performance and high emergency power frequency
  - Provide adequate flow at high RCS pressures assuming weak HPI pump performance and low emergency power frequency
- Hydraulic models for the LPI and BS system were rerun based on the wear-degraded pump performance information and the debris test data for the LPI flow restrictors. Conservatisms common to the LPI and BS analyses include assuming weak pump performance, and low emergency power frequency. Additional conservatisms assumed in the LPI analyses were the choice of break location (core flood line break) and initial single failure (loss of an LPI pump in the train with the intact core flood line).

Open Item 5.3-3: Mission Times for Fluid Systems

The mission times for high pressure injection, low pressure injection, and reactor building spray were defined as 48 hours, 30 days and 7 days, respectively. The licensee did not provide a clearly defined basis or supporting documentation for these mission times.

Duke Response:

Discussion of ONS' basis for ECCS and BS mission times is presented below. This is supporting basis information only, and is not a change to the design basis mission times for these systems.

Reactor Building Spray

The 7 day LOCA mission time assumed in the downstream effects analysis for the Reactor Building Spray (BS) system is based on and/or bounds the following:

- Maximum Hypothetical Accident (MHA) dose analysis credits BS system operation for 4.7 days for removal of fission products from the Reactor Building atmosphere. BS operation beyond 4.7 days is not credited for meeting 10 CFR 20 and 10 CFR 100 dose limits.
- Auxiliary Building Pump Room Heat-up Analysis assumes BS pumps are terminated after 7 days. Only after BS pumps are secured do pump room ambient temperatures begin to decrease. Based on the results from the Auxiliary Building Pump Room Heat-up Analysis, the BS pumps were qualified for operation in high ambient temperatures for a period of 7 days.
- Oconee Technical Support Center Guidance Document provides guidance to secure operating BS trains within the first 7 days of the accident.

High Pressure Injection

The 48 hour LOCA mission time assumed in the downstream effects analysis for the High Pressure Injection (HPI) system is based on and/or bounds the following:

- Emergency Operating Procedures (EOP) direct operators to cool down and/or utilize Reactor Vessel Head and Hot Leg High Point Vents to reduce RCS pressure below the shutoff head of the Low Pressure Injection (LPI) system. Based on this guidance and Control Room operator training to expeditiously proceed through the EOP, 48 hours provides sufficient time to reduce RCS pressure by cooling down and/or venting such that LPI injection and/or normal decay heat removal can be established.
- Auxiliary Building Pump Room Heat-up Analysis assumes HPI pumps are terminated after 48 hours. Based on this analysis, the HPI pumps were qualified for operation in high ambient temperatures for a period of 48 hours.
- HPI is credited for SBLOCA (breaks up to 0.75 ft^2). HPI flow is not credited for LBLOCA, since it would be secured during suction swap from the BWST to the RBES.

Low Pressure Injection

The 30 day LOCA mission time assumed in the downstream effects analysis for the Low Pressure Injection (LPI) system is based on and/or bounds the following:

- Auxiliary Building Pump Room Heat-up Analysis assumes LPI pumps must operate for 30 days. Based on the results from this analysis, the LPI pumps were qualified for operation in high ambient temperatures for a period of 30 days.
- Event duration for dose analysis is limited to 30 days.
- Guidance concerning Ultimate Heat Sink capacity (RG 1.27) and PWR Sump Performance Evaluation (Nuclear Energy Institute (NEI) Guidance Report (GR) and NRC Safety Evaluation Report (SER) published as NEI 04-07) both specify a period of 30 days as an acceptable event duration for design purposes.

Open Item 5.3-4: Quantification and Assessment of Downstream Effects that Cause Seal Leakage

The licensee did not quantify seal leakage associated with downstream effects into the auxiliary building, nor evaluate the effects on equipment qualification, sumps and drains operation or room habitability.

Duke Response:

All ECCS pumps at Oconee (HPI, LPI, and BS) utilize cyclone separators in their seal flush systems. Cyclone separators (in general) are designed to remove debris from the seal flush flow that could otherwise interfere with the springs of the mechanical seals and degrade the sealing action. Due to a lack of information for the installed cyclone separators (orifice size, internal geometry, etc.) and their obsolete status, no similarity arguments could be made to compare Oconee's existing cyclone separators to models that have been successfully tested (success with simulated post-LOCA debris). Therefore, Oconee is replacing its existing cyclone separators with models that have been tested successfully with simulated LOCA debris. Also, industry guidance for evaluating downstream effects (WCAP 16406-P, rev. 1) cites a study, albeit relatively short in duration, which showed that ECCS pump seals could operate successfully with debris-laden fluid without cyclone separators.

ONS has evaluated control room habitability and placed limits on ECCS leakage and control room unfiltered inleakage as part of the Maximum Hypothetical Accident (MHA) analysis. Based on the above, additional ECCS leakage (beyond the MHA limits) resulting from debris-laden fluid induced seal degradation is not postulated for ONS.

Open Item 5.4-1: Evaluate Chemical Effects

The licensee's chemical effects analysis was incomplete at the time of the audit. Also, the licensee had not evaluated the contribution of coatings to chemical effects by: (1) leaching constituents that could form precipitates or affect other debris; and (2) changing form due to the pool environment.

Duke Response:

The ONS chemical effects analysis has been completed. Discussion of the analysis may be found in responses to applicable RAI questions and Supplemental Response Content Guide questions elsewhere in this submittal.

The contributions of coatings to chemical effects are addressed in WCAP 16793-NP, rev. 0, section 2.5.2, "Protective Coatings Behavior." This section groups protective coatings used in a PWR containment building into three categories, discussed below.

1. Zinc-rich primers

Zinc rich primers may release elemental zinc to the post-LOCA sump in a powder-like form. The PWROG chemical effects test program described in WCAP 16530-NP, rev. 0, had demonstrated that, in general, there is very little zinc reaction with the post-accident sump fluid chemistry. Therefore, zinc-rich primers are evaluated to have negligible effect on post-LOCA chemical precipitate production.

2. Nonepoxy coatings

The nonepoxy coatings are alkyds, urethanes and acrylics. The amount of these coatings inside containment is generally limited to selected OEM equipment such as electrical junction boxes and therefore represents a small amount of material of the order of a few thousand square feet or less. Since there is relatively little OEM equipment located below the sump pool surface elevation at ONS (pool depth of approximately 4 ft), only a small fraction of this amount would be subject to submersion in the sump pool. In addition, these coatings are, as a class, chemically benign and do not react to the post-LOCA sump fluid. Therefore, these nonepoxy coatings are evaluated to have a negligible effect on post-LOCA chemical precipitate production.

3. Epoxy coatings

Most PWR containment buildings have a significant amount of epoxy coatings. For example, ONS uses epoxy coatings on concrete surfaces such as basement floor and walls which would be submerged or partially submerged during post-LOCA sump recirculation. The Epoxy coatings will retain their structural integrity at temperatures up to about 350 F. Immersed in fluids at temperatures less than 350 F, epoxy coating debris is not sticky or tacky. The worst case sump fluid temperature for ONS is (conservatively) 280 F. Testing of epoxy coating systems in both acidic and basic solutions has demonstrated that epoxy coating systems are chemically inert and contribute only a small amount of leachate. Epoxy coatings, therefore, are evaluated to be chemically inert in the post-LOCA chemical environment and therefore have negligible effect on post-LOCA precipitate production.

To summarize, in general, protective coatings are considered to have minimal impact on the post-LOCA chemistry of the containment sump due to either the small amount of material or the demonstrated chemical inertness of the coatings.

Enclosure 4

ONS COMMITMENTS

ONS GL 2004-02 Commitments

Commitment No.	Description	Completion Date
1	Evaluate and Respond to NRC Conditions and Limitations on WCAP 16793-NP rev. 0.	90 days after receipt of final NRC Conditions and Limitations.
2	Revise SD 1.3.9 to ensure evaluation of metal scaffolding left in RB.	Prior to Unit 1 spring 2008 refueling outage.
3	Update UFSAR to capture new licensing basis.	One year after completion of station modifications.