Dave Morey
Vice President
Farley Project

Southern Nuclear
Operating Company, Inc.
Post Office Box 1295
Birmingham, Alabama 35201

Tel 205.992.5131

SOUTHERN COMPANY
Energy to Serve Your World℠

August 1, 2001

Docket Nos.: 50-348
50-364

NEL-01-0160

U. S. Nuclear Regulatory Commission
ATTN: Document Control Desk
Washington, DC 20555

Joseph M. Farley Nuclear Plant
Inservice Inspection Report

Ladies and Gentlemen:

Pursuant to the requirements of 10 CFR 50.55a(g) and 10 CFR 50.36, Southern Nuclear Operating Company hereby submits the Farley Nuclear Plant Unit 2, Interval 2, Period 3, Outage 3 Inservice Inspection Report. This report (Enclosure 1) describes and summarizes the inservice inspection activities performed during the Unit 2 fourteenth refueling outage. These activities were completed May 06, 2001.

Other pertinent report information is available at Farley Nuclear Plant for your review. This information includes, as applicable, examination plans and schedules, examination results and reports, examination methods and procedures, evaluation results, and corrective action and repairs.

If there are any questions, please advise.

Respectfully submitted,

Dave Morey

AJP:kaw: IIR.doc

Enclosure
Inservice Inspection Report Farley Nuclear Plant Unit 2 - Fourteenth Refueling Outage

A047
1/1

cc: Southern Nuclear Operating Company
Mr. L. M. Stinson, General Manager (w/o)

U. S. Nuclear Regulatory Commission, Washington, D. C.
Mr. F. Rinaldi, Licensing Project Manager – Farley (w/o)

U. S. Nuclear Regulatory Commission, Region II
Mr. L. A. Reyes, Regional Administrator (w/o)
Mr. T. P. Johnson, Senior Resident Inspector – Farley (w/o)

ENCLOSURE 1

Inservice Inspection Report
Farley Nuclear Plant Unit 2 - Fourteenth Refueling Outage

INSERVICE INSPECTION REPORT

REFUELING 14

INTERVAL 2
PERIOD 3
OUTAGE 3

J.M. FARLEY UNIT 2
NUCLEAR GENERATING PLANT
COLUMBIA, ALABAMA 36319

Southern Nuclear Operating Company
40 Inverness Parkway
Birmingham, Alabama 35242

INSERVICE INSPECTION REPORT

Date of Document Completion: July 27, 2001

REFUELING 14

INTERVAL 2
PERIOD 3
OUTAGE 3

J. M. FARLEY UNIT 2
NUCLEAR GENERATING PLANT
COLUMBIA, ALABAMA 36319

Commercial Service Date: July 30, 1981

Southern Nuclear Operating Company
40 Inverness Parkway
Birmingham, Alabama 35242

INDEX

SECTION	TAB
NIS-1 OWNERS REPORT	A
SUMMARY	B
EXAMINATION PROGRAM	C
EXAMINATION RESULTS	D
ADDITIONAL EXAMINATIONS	E
INDICATIONS	F
PERSONNEL, EQUIPMENT, MATERIAL, & CALIBRATION BLOCK CERTIFICATIONS	G
EXAMINATION PROCEDURES	H
REACTOR VESSEL INSPECTION TOOL DATA AND RESULTS	I
NIS-2 FORM-OWNER'S REPORTS FOR REPAIRS AND REPLACEMENTS	J

FORM NIS-1 OWNER'S REPORT FOR INSERVICE INSPECTIONS
As required by the Provisions of the ASME Code Rules

1. Owner Southern Nuclear Operating Co. 40 Inverness Center Parkway, Birmingham, Al 35242 (as agent for Alabama Power Co.)
(Name and Address of Owner)

2. Plant J. M. Farley Nuclear Plant, Hwy 95 South, Columbia, Al. 36319
(Name and Address of Plant)

3. Plant Unit 2 4. Owner Certificate of Authorization (if required) N/A

5. Commercial Service 07/30/81 6. National Board Number for Unit See Listed N. B. for each component

7. Components Inspected **NOTE: NO EXAMINATIONS SCHEDULED FOR UNIT 2 RF 14**

Component or Appurtenance	Manufacturer or Installer	Manufacturer or Installer Serial No.	State or Province No.	National Board No.

Note: Supplemental sheets in the form of lists, sketches, or drawings may be used, provided (1) size is 8 1/2 in. x 11 in., (2) information in items 1 through 6 on this report is included on each sheet, and (3) each sheet is numbered and the number of sheets is recorded at the top of this form.

FORM NIS-1

8. Examination Dates **02/24/01** to **05/06/01**

9. Inspection Period Identification: **Third Period 03/30/98 to 07/30/01**

10. Inspection Interval Identification: **Second Interval 07/30/91 to 07/30/01**

11. Applicable Edition of Section XI **1989** **Addenda None**

12. Date/Revision of Inspection Plan: **FNP-2-M-097; 08/31/00; Revision 2**

13. Abstract of Examinations and Tests. Include a list of examinations and tests and a statement concerning status of work required for the Inspection Plan. **See Tabs B, C and E**

14. Abstract of Results of Examinations and Tests. **See Tab B**

15. Abstract of Corrective Measures. **See Tab B**

We certify that a) the statements made in this report are correct, b) the examinations and tests meet the Inspection Plan as required by the ASME Code, SectionXI, and c) corrective measures taken conform to the rules of the ASME Code, Section XI.

Certificate of Authorization No. (if applicable) **N/A** Expiration Date **N/A**

Date 7/26 20 01 Signed **Southern Nuclear Operating Co.** By [signature]
(Owner)

CERTIFICATE OF INSERVICE INSPECTION

I, the undersigned, holding a valid commission issued by the National Board of Boiler and Pressure Vessel Inspectors and the State or Province of Georgia and employed by Factory Mutual Insurance Company of Johnston, Rhode Island have inspected the components described in this Owner's Report during the period 2/24/01 to 7/19/01, and state that to the best of my knowledge and belief, the Owner has performed examinations and tests and taken corrective measures described in this Owner's Report in accordance with the Inspection Plan and as required by the ASME Code, Section XI.

By signing this certificate neither the Inspector nor his employer makes any warranty, expressed or implied, concerning the examinations, tests, and corrective measures described in this Owner's Report. Furthermore, neither the Inspector nor his employer shall be liable in any manner for any personal injury or property damage or a loss of any kind arising from or connected with this inspection.

[signature] Commissions GA 328 INA
Inspector's Signature National Board, State, Province, and Endorsements

Date 7/27 2001

OWNER'S REPORT
FOR
INSERVICE INSPECTION

DATE:	07/27/01
OWNER NAME AND ADDRESS:	Southern Nuclear Operating Co. 40 Inverness Parkway Birmingham, Al 35242 (as agent for Alabama Power Co.)
NAME AND ADDRESS OF NUCLEAR GENERATING PLANT:	Joseph M. Farley Nuclear Plant Highway 95 South Columbia, Alabama 36319
NAME ASSIGNED TO NUCLEAR POWER UNIT:	Joseph M. Farley Nuclear Plant Unit 2
OWNER CERTIFICATE OF AUTHORIZATION:	N/A
COMMERCIAL SERVICE DATE:	July 30, 1981
NATIONAL BOARD NUMBER:	See listed NB's for each component
NAME OF COMPONENTS OR PARTS OF COMPONENTS INVOLVED:	**NOTE: NO EXAMINATIONS SCHEDULED FOR UNIT 2 RF 14**

CLASS 1

COMPONENT OR SYSTEM	SYSTEM DESIGNATION	APR SKETCH

CLASS 2

COMPONENT OR SYSTEM	SYSTEM DESIGNATION	APR SKETCH

HYDROSTATIC TESTING: **SEE TABS B AND E**

NAME AND ADDRESS OF MANUFACTURER OR INSTALLER OF COMPONENTS:

INSERVICE INSPECTION DATES: **02/24/01 TO 05/06/01**

NAME OF AUTHORIZED NUCLEAR INSPECTOR: Charles G. Ward

NAME AND MAILING ADDRESS OF INSPECTOR'S EMPLOYER:

Factory Mutual Insurance Company
1301 Atwood Ave.
P. O. Box 7500
Johnston, RI. 02919

ABSTRACT: SEE TABS B AND C

J. M. FARLEY NUCLEAR PLANT UNIT NO 2
INTERVAL 2 PERIOD 3 OUTAGE 3
BALANCE OF PLANT/REACTOR VESSEL EXAMINATION SUMMARY

INTRODUCTION

The Inservice examination of Class 1 and 2 components and piping systems was conducted at Farley Nuclear Plant Unit 2 from February, 2001 to May, 2001 consisted only of pressure testing activities. The examinations performed in accordance with an approved Examination Program Plan located under Tab C of this report were performed to meet pre-service requirements on the new replacement steam generators.

The program utilized ultrasonic, visual, and surface nondestructive testing methods in accordance with the requirements of ASME Section XI 1989 Edition and Technical Specifications 4.0.5 and 4.4.6.

Selected examinations and related activities were witnessed by representatives of Southern Nuclear Operating Company, its Authorized Inspection Agency, and the United States Nuclear Regulatory Commission. All examinations were performed to the extent practical within geometric and physical limitations.

RESULTS

Examinations resulted in recordable indications as noted below. No volumetric or surface examinations were scheduled for the RF 14 outage, with the exception of the pre-service examinations on the replacement steam generators. Data from these examinations is contained in Tab E. Indications were evaluated and dispositioned by Indication Evaluation Reports (IER), shown in Tab F of this report. The results are summarized below.

SUMMARY OF INDICATIONS

CLASS 1

(A) VOLUMETRIC EXAMINATIONS

- None.

(B) SURFACE EXAMINATIONS

- None.

(C) VISUAL EXAMINATIONS

- There were sixteen (16) valves which had boron accumulation, which was removed and the valves were inspected satisfactorily.

CLASS 2

(A) VOLUMETRIC EXAMINATIONS

- None.

(B) SURFACE EXAMINATIONS

- None.

(C) VISUAL EXAMINATIONS

- One (1) flow orifice had an accumulation of boron, which was removed and the re-inspection was satisfactorily.

AUGMENTED EXAMINATIONS

- None.

ADDITIONAL EXAMINATIONS

Results from additional examinations which were performed during this outage are as follows:

- **Class 1 System Leakage Test**

  In accordance with ASME Section XI 1989 Edition IWB-5221, leak testing of the Class 1 Reactor Coolant System Pressure Boundary was performed prior to startup following the fourteenth refueling outage. The testing was completed by plant personnel on 5/06/01. A copy of the completed test procedure FNP-2-SOP-1.4 is retained by the Farley Nuclear Plant Document Control.

  In addition, to meet the 1989 Section XI IWA-5242(a) requirement for removal of insulation from bolted connections in "systems borated for the purpose of controlling reactivity" the alternative exam requirements of Relief Request RR 27 were used. This Relief Request allowed the insulation to be removed and the bolted connection to be examined for evidence of leakage at static conditions. If evidence of leakage was apparent the bolting was either removed and examined per IWA-5250(2) or the provisions of Relief Request RR 23 were followed. This allowed an evaluation to be performed instad of removal and examination of the bolting. Also, examinations and evaluations performed during the Class 1 pressure test at the end of the refueling (FNP-2-SOP-1.4) is located behind Tab 1.7.

- **Class 1 and 2 Hydrotesting**

  No Class 1 or 2 hydrostatic testing was performed during the fourteenth refueling outage.

- **Class 2 Functional/Inservice Testing**

  Functional/Inservice tests Class 2 systems were performed in accordance with the requirements of ASME Code Section XI, Articles IWA-5000 and IWC-5000. Systems examined included CTMT Spray, Boric Acid Transfer System, CVCS, Service Water and Component Cooling Water. A copy of the completed test report(s) is maintained in FNP Document Control.

STATUS OF EXAMINATIONS REQUIRED FOR CURRENT INTERVAL

The examinations completed to date represent 100% of the total Class 1 and 2 scope for the current period and 100% of the examinations required for the current interval.

EXAMINATION PROGRAM PLAN

UNIT 2 RF14

INTERVAL 2 PERIOD 3 OUTAGE 3

2001

UNIT 2

FIGURE 2

FARLEY NUCLEAR PLANT
INSERVICE INSPECTION PROGRAM CHANGE

Unit No. 2 **Change No.** 001 **Page** 1 **of** 2

10 Year Interval 2 **40 Month Period** 3 **Outage** 3

Components:
Add the following welds for PSI / Steam Generator Replacement project

Reason For Change:
2R14 – Replaced Steam Generators A / B / C PSI required on replacement welds

	Add Examinations	Exam Required	
1.	APR1-4100-4R	Volumetric and Surface	PSI examination
2.	APR1-4100-5R	Volumetric and Surface	PSI examination
3.	APR1-4200-4R	Volumetric and Surface	PSI examination
4.	APR1-4200-5R	Volumetric and Surface	PSI examination
5.	APR1-4300-4R	Volumetric and Surface	PSI examination
6.	APR1-4300-5R	Volumetric and Surface	PSI examination
7.	APR2-4100-1R	Volumetric and Surface	PSI examination
8.	APR2-4200-1R	Volumetric and Surface	PSI examination
9.	APR2-4300-1R	Volumetric and Surface	PSI examination
10.	APR2-4150-19R	Volumetric and Surface	PSI examination
11.	APR2-4250-14R	Volumetric and Surface	PSI examination
12.	APR2-4350-22R	Volumetric and Surface	PSI examination
13	APR2-4350-30BC	Surface	PSI examination
14	APR1-3300-CS-1R	VT-3	PSI examination
15	APR1-3300-CS-2R	VT-3	PSI examination
16	APR1-3300-CS-3R	VT-3	PSI examination
17	APR1-3300-CS-4R	VT-3	PSI examination
18	EG2-045-2AFW-R51 DELETE	VT-3 Substitute like support	EG2-487-2AFW-R36

Delete the following components, the Steam generators are being replaced and these items have been replaced.

19	APR1-3300-CS-1 THROUGH 4		
20	APR1-3300-IR1 AND IR2		
21	APR1-4300-4DM AND 5 DM		
22	APR2-3100-8	APR2-3200-2 AND 3	APR2-3300-5, 6 AND 8IR

APPROVED BY: N/A
Vendor Coordinator **Date**

APPROVED BY: J. Eric Aycock 3-29-01
SNC Coordinator **Date**

UNIT 2

FIGURE 2

FARLEY NUCLEAR PLANT
INSERVICE INSPECTION PROGRAM CHANGE

Unit No. 2 **Change No.** 001 **Page** 2 **of** 2

10 Year Interval 2 **40 Month Period** 3 **Outage** 3

Delete the following components, no RC pumps or casings were disassembled during 2R14 to allow for ISI.

23	APR1-5100-1C	APR1-5100-F1	
24	APR1-5200-1C	APR1-5200-F1	
25	APR1-5300-1C	APR1-5300-F1	

APPROVED BY: N/A
Vendor Coordinator **Date**

APPROVED BY: J. Eric Aycock 3-29-01
SNC Coordinator **Date**

UNIT 2

FIGURE 2

FARLEY NUCLEAR PLANT
INSERVICE INSPECTION PROGRAM CHANGE

Unit No. 2 **Change No.** 002 **Page** 1 **of** 1

10 Year Interval 2 **40 Month Period** 3 **Outage** 3

Components: **Reason For Change:**

	Delete the following	Exam Required	Not dissassembled
1.	APR1-4101-QV001B	VT-3	Not dissassembled
2.	APR1-4101-QV016B	VT-3	Not dissassembled
3.	APR1-4102-QV032A	VT-3	Not dissassembled
4.	APR1-4102-QV037A	VT-3	Not dissassembled
5.	APR1-4103-QV021C	VT-3	Not dissassembled
6.	APR1-4103-QV051C	VT-3	Not dissassembled
7.	APR1-4104-QV076A	VT-3	Not dissassembled
8.	APR1-4104-QV077A	VT-3	Not dissassembled
9.	APR1-4201-QV032B	VT-3	Not dissassembled
10.	APR1-4201-QV037B	VT-3	Not dissassembled
11.	APR1-4202-QV021B	VT-3	Not dissassembled
12.	APR1-4203-QV051B	VT-3	Not dissassembled
13.	APR1-4204-QV076B	VT-3	Not dissassembled
14.	APR1-4204-QV077B	VT-3	Not dissassembled
15.	APR1-4301-QV001A	VT-3	Not dissassembled
16.	APR1-4301-QV016A	VT-3	Not dissassembled
17.	APR1-4302-QV032C	VT-3	Not dissassembled
18.	APR1-4302-QV037C	VT-3	Not dissassembled
19.	APR1-4303-QV021A	VT-3	Not dissassembled
20.	APR1-4304-QV051A	VT-3	Not dissassembled
21.	APR1-4305-QV077C	VT-3	Not dissassembled
22.	APR1-4501-QV031A	VT-3	Not dissassembled
23.	APR1-4502-QV031B	VT-3	Not dissassembled
24.	APR1-4503-QV031C	VT-3	Not dissassembled

APPROVED BY: N/A **Vendor Coordinator** N/A **Date**

APPROVED BY: J. Eric Aycock **SNC Coordinator** 4-17-01 **Date**

J. M. FARLEY NUCLEAR PLANT
OUTAGE PLAN
Interval 2 Period 3 Outage 3

(89) Code Cat. (89) Item No.	Component No. Figure No.	Component Desc.	Cal Block No.	Method Sur	Vol	Vis	NDE Procedures	Remarks
~~F-A~~ F1.40	~~APR1-3300-CS-1~~ Figure 037	~~STEAM GENERATOR 2C Q2B21H001C~~	-		VT-3		FNP-0-NDE-100.23	
~~F-A~~ F1.40	~~APR1-3300-CS-2~~ Figure 037	~~STEAM GENERATOR 2C Q2B21H001C~~			VT-3		FNP-0-NDE-100.23	
~~F-A~~ F1.40	~~APR1-3300-CS-3~~ Figure 037	~~STEAM GENERATOR 2C Q2B21H001C~~	-		VT-3		FNP-0-NDE-100.23	
~~F-A~~ F1.40	~~APR1-3300-CS-4~~ Figure 037	~~STEAM GENERATOR 2C Q2B21H001C~~			VT-3		FNP-0-NDE-100.23	
~~B-D~~ B3.140	~~APR1-3300-IR1~~ Figure 008	~~STM GEN NOZ IN RADIUS (HOT LEG)~~			VT-1		FNP-0-NDE-100.21	~~(VT IN LIEU OF UT)~~
~~B-D~~ B3.140	~~APR1-3300-IR2~~ Figure 008	~~STM GEN NOZ IN RAD (CROSS OVER)~~			VT-1		FNP-0-NDE-100.21	~~(VT IN LIEU OF UT)~~
~~B-M-2~~ B12.50	~~APR1-4101-QV001B~~ Figure Internal	~~COPES VLV BODY 12" GATE VLV RHR~~			VT-3		FNP-0-NDE-100.23	~~Group 1. Inspect one per group if~~ disassembled.
~~B-M-2~~ B12.50	~~APR1-4101-QV016B~~ Figure Internal	~~COPES VLV BODY 12" GATE VLV RHR~~			VT-3		FNP-0-NDE-100.23	~~Group 1. Inspect one per group if~~ disassembled.
~~B-M-2~~ B12.50	~~APR1-4102-QV032A~~ Figure Internal	~~COPES 12" CHK VLV ACCUM DISCH~~			VT-3		FNP-0-NDE-100.23	~~Group 5. Inspect one per group if~~ disassembled.
~~B-M-2~~ B12.50	~~APR1-4102-QV037A~~ Figure Internal	~~COPES 12" CHK VLV ACCUM DISCH~~			VT-3		FNP-0-NDE-100.23	~~Group 5. Inspect one per group if~~ disassembled.
~~B-M-2~~ B12.50	~~APR1-4103-QV021C~~ Figure Internal	~~VELAN VALVE BODY 6" CHK VLV RHR~~			VT-3		FNP-0-NDE-100.23	~~Group 2. Inspect one per group if~~ disassembled.
~~B-M-2~~ B12.50	~~APR1-4103-QV051C~~ Figure Internal	~~VELAN VALVE BODY 6" CHK VLV RHR~~			VT-3		FNP-0-NDE-100.23	~~Group 2. Inspect one per group if~~ disassembled.
~~B-M-2~~ B12.50	~~APR1-4104-QV076A~~ Figure Internal	~~VELAN VALVE BODY 6" CHK VLV SI~~			VT-3		FNP-0-NDE-100.23	~~Group 3. Inspect one per group if~~ disassembled.
~~B-M-2~~ B12.50	~~APR1-4104-QV077A~~ Figure Internal	~~VELAN VALVE BODY 6" CHK VLV SI~~			VT-3		FNP-0-NDE-100.23	~~Group 3. Inspect one per group if~~ disassembled.
~~B-M-2~~ B12.50	~~APR1-4201-QV032B~~ Figure Internal	~~COPES 12" CHK VLV ACCUM DISCH~~			VT-3		FNP-0-NDE-100.23	~~Group 5. Inspect one per group if~~ disassembled.

PC-001

PC-002

J. M. FARLEY NUCLEAR PLANT
OUTAGE PLAN
Interval 2 Period 3 Outage 3

(89) Code Cat. (89) Item No.	Component No. Figure No.	Component Desc.	Cal Block No.	Method Sur	Method Vol	Method Vis	NDE Procedures	Remarks	
~~B-M-2~~ B12.50	~~APR1-4201-QV037B~~ Figure Internal	~~COPES 12" CHK VLV ACCUM DISCH~~			~~VT-3~~		~~FNP-0-NDE-100.23~~	~~Group 5. Inspect one per group if~~ disassembled.	PC-002
~~B-M-2~~ B12.50	~~APR1-4202-QV021B~~ Figure Internal	~~VELAN VALVE BODY 6" CHK VLV RHR~~			~~VT-3~~		~~FNP-0-NDE-100.23~~	~~Group 2. Inspect one per group if~~ disassembled.	
~~B-M-2~~ B12.50	~~APR1-4203-QV051B~~ Figure Internal	~~VELAN VALVE BODY 6" CHK VLV RHR~~			~~VT-3~~		~~FNP-0-NDE-100.23~~	~~Group 2. Inspect one per group if~~ disassembled.	
~~B-M-2~~ B12.50	~~APR1-4204-QV076B~~ Figure Internal	~~VELAN VALVE BODY 6" CHK VLV SI~~			~~VT-3~~		~~FNP-0-NDE-100.23~~	~~Group 3. Inspect one per group if~~ disassembled.	
~~B-M-2~~ B12.50	~~APR1-4204-QV077B~~ Figure Internal	~~VELAN VALVE BODY 6" CHK VLV SI~~			~~VT-3~~		~~FNP-0-NDE-100.23~~	~~Group 3. Inspect one per group if~~ disassembled.	
~~B-F~~ B5.70	~~APR1-4300-4DM~~ Figure 012	~~ELBOW TO SG NOZZLE~~	~~ALA/APR-33~~		~~SUR~~		~~FNP-0-NDE-100.5~~		PC-001
~~B-F~~ B5.70	~~APR1-4300-4DM~~ Figure 012	~~ELBOW TO SG NOZZLE~~	~~ALA/APR-33~~		~~VOL~~		~~FNP-0-NDE-100.41~~		
~~B-F~~ B5.70	~~APR1-4300-5DM~~ Figure 012	~~SG NOZZLE TO ELBOW~~	~~ALA/APR-33~~		~~SUR~~		~~FNP-0-NDE-100.5~~		
~~B-F~~ B5.70	~~APR1-4300-5DM~~ Figure 012	~~SG NOZZLE TO ELBOW~~	~~ALA/APR-33~~		~~VOL~~		~~FNP-0-NDE-100.41~~		
~~B-M-2~~ B12.50	~~APR1-4301-QV001A~~ Figure Internal	~~COPES VLV BODY 12" GATE VLV RHR~~			~~VT-3~~		~~FNP-0-NDE-100.23~~	~~Group 1. Inspect one per group if~~ disassembled.	PC-002
~~B-M-2~~ B12.50	~~APR1-4301-QV016A~~ Figure Internal	~~COPES VLV BODY 12" GATE VLV RHR~~			~~VT-3~~		~~FNP-0-NDE-100.23~~	~~Group 1. Inspect one per group if~~ disassembled.	
~~B-M-2~~ B12.50	~~APR1-4302-QV032C~~ Figure Internal	~~COPES 12" CHK VLV ACCUM DISCH~~			~~VT-3~~		~~FNP-0-NDE-100.23~~	~~Group 5. Inspect one per group if~~ disassembled.	
~~B-M-2~~ B12.50	~~APR1-4302-QV037C~~ Figure Internal	~~COPES 12" CHK VLV ACCUM DISCH~~			~~VT-3~~		~~FNP-0-NDE-100.23~~	~~Group 5. Inspect one per group if~~ disassembled.	
~~B-M-2~~ B12.50	~~APR1-4303-QV021A~~ Figure Internal	~~VELAN VALVE BODY 6" CHK VLV RHR~~			~~VT-3~~		~~FNP-0-NDE-100.23~~	~~Group 2. Inspect one per group if~~ disassembled.	
~~B-M-2~~ B12.50	~~APR1-4304-QV051A~~ Figure Internal	~~VELAN VALVE BODY 6" CHK VLV RHR~~			~~VT-3~~		~~FNP-0-NDE-100.23~~	~~Group 2. Inspect one per group if~~ disassembled.	

J. M. FARLEY NUCLEAR PLANT
OUTAGE PLAN
Interval 2 Period 3 Outage 3

(89) Code Cat. (89) Item No.	Component No. Figure No.	Component Desc.	Cal Block No.	Method Sur	Method Vol	Method Vis	NDE Procedures	Remarks
~~B-M-2~~ B12.50	~~APR1-4305-V077C~~ Figure Internal	~~VELAN VALVE BODY 6" CHK VLV SI~~			~~VT-3~~		~~FNP-0-NDE-100.23~~	~~Group 3. Inspect one per group if~~ disassembled.
~~B-M-2~~ B12.50	~~APR1-4501-QV031A~~ Figure Internal	~~CROSBY VLV BODY 6" RLF VLV PZR~~			~~VT-3~~		~~FNP-0-NDE-100.23~~	~~Group 4. Inspect one per group if~~ disassembled.
~~B-M-2~~ B12.50	~~APR1-4502-QV031B~~ Figure Internal	~~CROSBY VLV BODY 6" RLF VLV PZR~~			~~VT-3~~		~~FNP-0-NDE-100.23~~	~~Group 4. Inspect one per group if~~ disassembled.
~~B-M-2~~ B12.50	~~APR1-4503-QV031C~~ Figure Internal	~~CROSBY VLV BODY 6" RLF VLV PZR~~			~~VT-3~~		~~FNP-0-NDE-100.23~~	~~Group 4. Inspect one per group if~~ disassembled.
~~B-L-2~~ B12.20	~~APR1-5100-1C~~ Figure Internal	~~R.C. PUMP CASINGS~~			~~VT-3~~		~~FNP-0-NDE-100.23~~	~~INSPECT ONE PUMP CASING IF A~~ PUMP IS DISASSEMBLED.
~~B-G-1~~ B6.190	~~APR1-5100-F1~~ Figure Flange S	~~R.C. PUMP FLANGE SURFACE~~			~~VT-1~~		~~FNP-0-NDE-100.21~~	~~Insp. per. FNP Maint. procedure~~
~~B-L-2~~ B12.20	~~APR1-5200-1C~~ Figure Internal	~~R.C. PUMP CASINGS~~			~~VT-3~~		~~FNP-0-NDE-100.23~~	~~INSPECT ONE PUMP CASING IF A~~ PUMP IS DISASSEMBLED.
~~B-G-1~~ B6.190	~~APR1-5200-F1~~ Figure Flange S	~~R.C. PUMP FLANGE SURFACE~~			~~VT-1~~		~~FNP-0-NDE-100.21~~	~~Insp. per. FNP Maint. procedure~~
~~B-L-2~~ B12.20	~~APR1-5300-1C~~ Figure Internal	~~R.C. PUMP CASINGS~~			~~VT-3~~		~~FNP-0-NDE-100.23~~	~~INSPECT ONE PUMP CASING IF A~~ PUMP IS DISASSEMBLED.
~~B-G-1~~ B6.190	~~APR1-5300-F1~~ Figure Flange S	~~R.C. PUMP FLANGE SURFACE~~			~~VT-1~~		~~FNP-0-NDE-100.21~~	~~Insp. per. FNP Maint. procedure~~
~~C-B~~ C2.21	~~APR2-3100-8~~ Figure 026	~~STM GN A FW NOZ TO SHELL WELD~~	~~APR-5~~		~~SUR~~		~~FNP-0-NDE-100.11~~	
~~C-B~~ C2.21	~~APR2-3100-8~~ Figure 026	~~STM GN A FW NOZ TO SHELL WELD~~	~~APR-5~~		~~VOL~~		~~FNP-0-NDE-100.34~~	
~~C-A~~ C1.30	~~APR2-3200-2~~ Figure 024	~~STM GN B STUB BARREL / UP T SHT~~	~~APR-5~~		~~VOL~~		~~FNP-0-NDE-100.34~~	
~~C-A~~ C1.10	~~APR2-3200-3~~ Figure 023	~~STM GN B LWR SHELL/STUB BARREL~~	~~APR-5~~		~~VOL~~		~~FNP-0-NDE-100.34~~	
~~C-A~~ C1.10	~~APR2-3300-5~~ Figure 023	~~STM GN C UP SHELL/TRANS CONE~~	~~APR-5~~		~~VOL-AUG~~		~~FNP-0-NDE-100.34~~	~~I.N. 85-65, 90-04~~

PC-002

PC001

J. M. FARLEY NUCLEAR PLANT
OUTAGE PLAN
Interval 2 Period 3 Outage 3

(89) Code Cat. (89) Item No.	Component No. Figure No.	Component Desc.	Cal Block No.	Method Sur	Vol	Vis	NDE Procedures	Remarks	
~~C-A~~ C1.20	~~APR2-3300-6~~ Figure 023	~~STM GN C UPPER HEAD TO SHELL~~	~~APR-5~~		~~VOL~~		~~FNP-0-NDE-100.34~~		PC001
~~C-B~~ C2.22	~~APR2-3300-8IR~~ Figure 026	~~STM GN C FW NOZ INNER RADIUS~~	~~ALA-34~~		~~VOL~~		~~FNP-0-NDE-100.38~~		
C-F-1 C5.11	APR2-4504-1 Figure 030	TEE TO PIPE	ALA-13		VOL-AUG		FNP-0-NDE-100.44	AUGMENTED EXAM. SCAN 6" BASE METAL PIPE SIDE OF WELD.	
C-F-1 C5.11	APR2-4504-2 Figure 030	PIPE TO PIPE	ALA-13		VOL-AUG		FNP-0-NDE-100.44	AUGMENTED EXAM. SCAN 6" BASE METAL EITHER SIDE OF WELD.	
C-F-1 C5.11	APR2-4504-3 Figure 030	PIPE TO PIPE	ALA-13		VOL-AUG		FNP-0-NDE-100.44	AUGMENTED EXAM. SCAN 6" BASE METAL EITHER SIDE OF WELD.	
C-F-1 C5.11	APR2-4508-1 Figure 030	TEE TO PIPE	ALA-13		VOL-AUG		FNP-0-NDE-100.44	AUGMENTED EXAM. SCAN 6" BASE METAL PIPE SIDE OF WELD.	
C-F-1 C5.11	APR2-4508-2 Figure 030	PIPE TO ELBOW	ALA-13		VOL-AUG		FNP-0-NDE-100.44	AUGMENTED EXAM. SCAN 6" BASE METAL PIPE SIDE OF WELD.	
C-F-1 C5.11	APR2-4508-3 Figure 030	ELBOW TO PIPE	ALA-13		VOL-AUG		FNP-0-NDE-100.44	AUGMENTED EXAM. SCAN 6" BASE METAL PIPE SIDE OF WELD.	
~~F-A~~ F1.30	~~EG2-045-2AFW-R51~~ Figure 038	~~TWO DIRECTIONAL RESTRAINT~~			~~VT-3~~		~~FNP-0-NDE-100.23~~	~~DEFERRED TO 2R14~~	PC001

UNIT 2

INSERVICE INSPECTION PROGRAM
Change No. 001 (attachment)

Component No.	Item No. Code Cat.	DESCRIPTION	Calibration block	EXAM	PROCEDURE	MAT./ EXAM. FIG	Remarks/ BECHTEL WELD NUMBER
APR1-4100-4R	B9.11 B-J	ELBOW TO SAFE END	ALA/APR-33 ALA-61	SUR VOL	BECHTEL PT ASME III/XI FNP-0-NDE-100.41	(A) 012	
APR1-4100-5R	B9.11 B-J	SAFE END TO ELBOW	ALA/APR-33 ALA-61	SUR VOL	BECHTEL PT ASME III/XI FNP-0-NDE-100.41	(A) 012	
APR1-4200-4R	B9.11 B-J	ELBOW TO SAFE END	ALA/APR-33 ALA-61	SUR VOL	BECHTEL PT ASME III/XI FNP-0-NDE-100.41	(A) 012	
APR1-4200-5R	B9.11 B-J	SAFE END TO ELBOW	ALA/APR-33 ALA-61	SUR VOL	BECHTEL PT ASME III/XI FNP-0-NDE-100.41	(A) 012	
APR1-4300-4R	B9.11 B-J	ELBOW TO SAFE END	ALA/APR-33 ALA-61	SUR VOL	BECHTEL PT ASME III/XI FNP-0-NDE-100.41	(A) 012	
APR1-4300-5R	B9.11 B-J	SAFE END TO ELBOW	ALA/APR-33 ALA-61	SUR VOL	BECHTEL PT ASME III/XI FNP-0-NDE-100.41	(A) 012	
APR1-3300-CS-1R	F-A F1.40	STEAM GENERATOR 2C Q2B21H001C	N/A	VT-3	FNP-0-NDE-100.23	037	
APR1-3300-CS-2R	F-A F1.40	STEAM GENERATOR 2C Q2B21H001C	N/A	VT-3	FNP-0-NDE-100.23	037	
APR1-3300-CS-3R	F-A F1.40	STEAM GENERATOR 2C Q2B21H001C	N/A	VT-3	FNP-0-NDE-100.23	037	
APR1-3300-CS-4R	F-A F1.40	STEAM GENERATOR 2C Q2B21H001C	N/A	VT-3	FNP-0-NDE-100.23	037	
APR2-4100-1R	C-F-2 C5.51	NOZZLE TO PUP-PIECE	ALA-24	SUR VOL	BECHTEL MT ASME III/XI FNP-0-NDE-100.43	(F) 030	
APR2-4200-1R	C-F-2 C5.51	NOZZLE TO PUP-PIECE	ALA-24	SUR VOL	BECHTEL MT ASME III/XI FNP-0-NDE-100.43	(F) 030	
APR2-4300-1R	C-F-2 C5.51	NOZZLE TO PUP-PIECE	ALA-24	SUR VOL	BECHTEL MT ASME III/XI FNP-0-NDE-100.43	(F) 030	
APR2-4150-19R	C-F-2 C5.51	REDUCER TO NOZZLE	ALA-51	SUR VOL	BECHTEL MT ASME III/XI FNP-0-NDE-100.43	(F) 030	
APR2-4250-14R	C-F-2 C5.51	REDUCER TO NOZZLE	ALA-51	SUR VOL	BECHTEL MT ASME III/XI FNP-0-NDE-100.43	(F) 030	
APR2-4350-22R	C-F-2 C5.51	REDUCER TO NOZZLE	ALA-51	SUR VOL	BECHTEL MT ASME III/XI FNP-0-NDE-100.43	(F) 030	

UNIT 2

INSERVICE INSPECTION PROGRAM
Change No. 001 (attachment)

Component No.	Item No. Code Cat.	DESCRIPTION	Calibration block	EXAM	PROCEDURE	MAT./ EXAM. FIG	Remarks/ BECHTEL WELD NUMBER
APR2-4350-30BC	C-F-2 C5.81	BRANCH CONNECTION	N/A	SUR	BECHTEL MT ASME III/XI	(F) 032	
* EG2-487-2AFW-R36	F-A F1.30	TWO DIRECTIONAL RESTRAINT	N/A	VT-3	FNP-0-NDE-100.23		

* Class 3 Support

INDEX TAB D

DESCRIPTION	TAB
CLASS 1	
REACTOR VESSEL EXAMS	1.1
PRESSURIZER EXAMS	1.2
STEAM GENERATOR EXAMS	1.3
PIPING WELD EXAMS	1.4
PRESSURE RETAINING BOLTING EXAMS	1.5
REACTOR COOLANT PUMP EXAMS	1.6
VALVE BODIES/BOLTING EXAMS	1.7
CLASS 2	
COMPONENT EXAMS	2.1
STEAM GENERATOR EXAMS	2.2
PIPING WELD EXAMS	2.3

NO EXAMINATIONS SCHEDULED THIS OUTAGE

NO EXAMINATIONS SCHEDULED THIS OUTAGE

NO EXAMINATIONS SCHEDULED THIS OUTAGE

NO EXAMINATIONS SCHEDULED THIS OUTAGE

NO EXAMINATIONS SCHEDULED THIS OUTAGE

NO EXAMINATIONS SCHEDULED THIS OUTAGE

CLASS 1 SYSTEM LEAKAGE TEST

FIGURE 1

VISUAL EXAMINATION RECORD VT-2

FARLEY NUCLEAR PLANT

SOUTHERN NUCLEAR OPERATING COMPANY

Unit	TPNS or System No.	Component or System Name	Examination Area Drawing Number	Examination Sheet Number
2	Q2B13	REACTOR COOLANT SYSTEM	FNP-2-SOP-1.4	1 of 1

Type of Pressure Test

- ☒ System Leakage Test per 1989 Edition of ASME Section XI
- ☐ System Leakage Test per 1992 Edition of ASME Section XI (for Code Case N-416-1 use)
- ☐ System Hydrostatic Test
- ☐ System Functional Test
- ☐ System Inservice Test
- ☐ System Pneumatic Test

WO/WA Number: NONE

Examiner Signature: [signature] Level: III

Date (Month-Day-Year): 05/06/01

Give a brief description of the examination area boundary: **EXAMINED ALL ACCESSIBLE SURFACES OF ASME CLASS 1 COMPONENTS**

Date and Time System to be Examined Put in Service: 05 / 06 / 01 01 : 41 Date and Time of Examination: 05 / 06 / 01 14 : 30

Check each box that applies to the examination area and indicate SAT or UNSAT for each:

☐ Insulated Weld Repair Area	☐ SAT	☐ UNSAT	☐ Uninsulated Weld Repair Area	☐ SAT	☐ UNSAT
☒ Insulated Weld Joint	☒ SAT	☐ UNSAT	☒ Uninsulated Weld Joint	☒ SAT	☐ UNSAT
☒ Insulated Piping System Bolted Connection	☒ SAT	☐ UNSAT	☒ Uninsulated Piping System Bolted Connection	☒ SAT	☐ UNSAT
☒ Insulated Valve Bolted Connection	☒ SAT	☐ UNSAT	☒ Uninsulated Valve Bolted Connection	☒ SAT	☐ UNSAT
☐ Insulated Pump Bolted Connection	☐ SAT	☐ UNSAT	☒ Uninsulated Pump Bolted Connection	☒ SAT	☐ UNSAT
☒ Insulated Vessel Bolted Connection	☒ SAT	☐ UNSAT	☒ Uninsulated Vessel Bolted Connection	☒ SAT	☐ UNSAT

This examination area ☒ does ☐ does not contain borated water

Explain all UNSAT areas below or on attached sheets.

Comments **During the examination, a small amount of water was noted on the seal table in the vicinity of incore tube B7. See attached evaluation of this examination area.**

TO: DOCUMENT CONTROL

SUBJECT: Leakage from FNP-2 Seal Table Tube B7 following the RCS Leakage Test during U2R14

REFERENCES: FNP-2-SOP-1.4

1. DESCRIPTION of PROBLEM: When performing the RCS leakage test during the startup of Unit-2 following U2R14, a small amount of water was found on the seal table in the vicinity of incore tube B7. The incore tube B7 is a new fitting.

2. EVALUATION PERFORMED: Maintenance personnel recommend that no more tightening of the compression fittings, which form the pressure boundary between the flux thimble assembly and the thimble guide tube, be accomplished. The area around the tube was cleaned and dried. Upon re-examination after a significant amount of time had passed, the surface of the incore tube B7 was wet again but no drops of water were formed; therefore, the leak is not becoming worse. The current leak rate is slight and is a very small fraction of the allowable RCS Technical Specification leakage. The leakage is less than 1 drop/minute allowable, for each thimble tube, indicated in the SCS response to REA 98 – 1915 (letter #FP 99-0224).

   The seal table is made of stainless steel, which is resistant to boric acid attack. If a sufficient quantity of water collects on the table, it will flow into the provided drain holes and subsequently into the containment sump. This collection process will prevent damage to any susceptible materials that may be in the area.

3. CONCLUSION: This amount of leakage is negligible in terms of component damage and operational effects. The seal table and incore tubes should be capable of performing the intended safety function during the next operating cycle.

James M. Agold 05.06.2001

Prepared by / Date

S J Casey 5-6-2001

Reviewed and Approved by / Date

FIGURE 1

VISUAL EXAMINATION RECORD VT-2

FARLEY NUCLEAR PLANT

SOUTHERN NUCLEAR OPERATING COMPANY

Unit	TPNS or System No.	Component or System Name	Examination Area Drawing Number	Examination Sheet Number
2	Q2E11	REF. 160.22-1	D-356358-1	1 of 2

Type of Pressure Test

- ☐ System Leakage Test per 1989 Edition of ASME Section XI
- ☐ System Leakage Test per 1992 Edition of ASME Section XI (for Code Case N-416-1 use)
- ☑ System Hydrostatic Test
- ☐ System Functional Test
- ☐ System Inservice Test
- ☐ System Pneumatic Test

WO/WA Number: W00659685

Examiner Signature: SCOTT R. ERICKSON — Scott R. Erickson

Level: II

Date (Month-Day-Year): 04-16-01

Give a brief description of the examination area boundary: SEE ATTACHED SHEET

Date and Time System to be Examined ~~Put in Service:~~ PRESS. TO 2235 psi 04/16/01 09:51 Date and Time of Examination: 04/16/01 10:02

SRE 4-16-01

Check each box that applies to the examination area and indicate SAT or UNSAT for each:

☐ Insulated Weld Repair Area	☐ SAT	☐ UNSAT	☐ Uninsulated Weld Repair Area	☐ SAT	☐ UNSAT
☐ Insulated Weld Joint	☐ SAT	☐ UNSAT	☐ Uninsulated Weld Joint	☐ SAT	☐ UNSAT
☐ Insulated Piping System Bolted Connection	☐ SAT	☐ UNSAT	☑ Uninsulated Piping System ~~Bolted Connection~~ SRE 4-16-01	☑ SAT	☐ UNSAT
☐ Insulated Valve Bolted Connection	☐ SAT	☐ UNSAT	☐ Uninsulated Valve Bolted Connection	☐ SAT	☐ UNSAT
☐ Insulated Pump Bolted Connection	☐ SAT	☐ UNSAT	☐ Uninsulated Pump Bolted Connection	☐ SAT	☐ UNSAT
☐ Insulated Vessel Bolted Connection	☐ SAT	☐ UNSAT	☐ Uninsulated Vessel Bolted Connection	☐ SAT	☐ UNSAT

This examination area ☑ does ☐ does not contain borated water

Explain all UNSAT areas below or on attached sheets.

Comments

TEST PERFORMED IN ACCORDANCE WITH APP. A OF FNP-2-STP-156.3

Component	Pressure Test	ISI Bdry Dwg No.	Coord	Loc Dwg	Evaluation/ Insulation/ Notes	Remarks
12" CCA-16 (A) (LOOP 3)	160.22-1	D-356358-1	G-2	EG2-012	1A/Y/6	FROM VALVE Q2E11V016A TO Q2E11V001A

FIGURE 1

VISUAL EXAMINATION RECORD VT-2

FARLEY NUCLEAR PLANT

SOUTHERN NUCLEAR OPERATING COMPANY

Unit	TPNS or System No.	Component or System Name	Examination Area Drawing Number	Examination Sheet Number
2	QZE11	REF. 160.23-1	D-356358-1	1 of 2

Type of Pressure Test

- ☐ System Leakage Test per 1989 Edition of ASME Section XI
- ☐ System Leakage Test per 1992 Edition of ASME Section XI (for Code Case N-416-1 use)
- ☑ System Hydrostatic Test
- ☐ System Functional Test
- ☐ System Inservice Test
- ☐ System Pneumatic Test

WO/WA Number: W00659685

Examiner Signature: SCOTT R. ERICKSON — Scott R. Erickson

Level: II

Date (Month-Day-Year): 04-16-01

Give a brief description of the examination area boundary: SEE ATTACHED SHEET

Date and Time System to be Examined ~~Put in Service:~~ PRESS. TO 2235psi 04 / 16 / 01 14 : 32 Date and Time of Examination: 04 / 16 / 01 14 : 43

Check each box that applies to the examination area and indicate SAT or UNSAT for each:

☐ Insulated Weld Repair Area	☐ SAT	☐ UNSAT	☐ Uninsulated Weld Repair Area	☐ SAT	☐ UNSAT
☐ Insulated Weld Joint	☐ SAT	☐ UNSAT	☐ Uninsulated Weld Joint	☐ SAT	☐ UNSAT
☐ Insulated Piping System Bolted Connection	☐ SAT	☐ UNSAT	☑ Uninsulated Piping System ~~Bolted Connection~~ SRE 4-16-01	☑ SAT	☐ UNSAT
☐ Insulated Valve Bolted Connection	☐ SAT	☐ UNSAT	☐ Uninsulated Valve Bolted Connection	☐ SAT	☐ UNSAT
☐ Insulated Pump Bolted Connection	☐ SAT	☐ UNSAT	☐ Uninsulated Pump Bolted Connection	☐ SAT	☐ UNSAT
☐ Insulated Vessel Bolted Connection	☐ SAT	☐ UNSAT	☐ Uninsulated Vessel Bolted Connection	☐ SAT	☐ UNSAT

This examination area ☑ does ☐ does not contain borated water

Explain all UNSAT areas below or on attached sheets.

Comments

TEST PERFORMED IN ACCORDANCE WITH APP. B OF FNP-2-STP-156.3

Component	Pressure Test	ISI Bdry Dwg No.	Coord	Loc Dwg	Evaluation/ Insulation/ Notes	Remarks
12" CCA-16 (A) (LOOP 1)	160.23-1	D-356358-1	E-2	EG2-012	1A/Y/6	TO Q2E11V001B FROM VALVE Q2E11V016B

FIGURE 1

VISUAL EXAMINATION RECORD VT-2

FARLEY NUCLEAR PLANT

SOUTHERN NUCLEAR OPERATING COMPANY

Unit	TPNS or System No.	Component or System Name	Examination Area Drawing Number	Examination Sheet Number
2	RCS CLASS 1	REF. FNP-2-STP-156.3 APPENDIX C	SEE ATTACHED SHEETS	1 of 6

Type of Pressure Test

- ☐ System Leakage Test per 1989 Edition of ASME Section XI
- ☐ System Leakage Test per 1992 Edition of ASME Section XI (for Code Case N-416-1 use)
- ☐ System Hydrostatic Test
- ☐ System Functional Test
- ☑ System Inservice Test
- ☐ System Pneumatic Test

WO/WA Number: W00659685

Examiner Signature: SCOTT R. ERICKSON / Scott R. Erickson

Level: II / II

Date (Month-Day-Year): 05-06-01

Give a brief description of the examination area boundary: SEE ATTACHED SHEETS

Date and Time System to be Examined Put in Service: 05/06/01 01:15 Date and Time of Examination: 05/06/01 05:15

Check each box that applies to the examination area and indicate SAT or UNSAT for each:

☐ Insulated Weld Repair Area	☐ SAT	☐ UNSAT	☐ Uninsulated Weld Repair Area	☐ SAT	☐ UNSAT
☐ Insulated Weld Joint	☐ SAT	☐ UNSAT	☐ Uninsulated Weld Joint	☐ SAT	☐ UNSAT
☑ Insulated Piping System ~~Bolted Connection~~ SRE 05/02/01	☑ SAT	☐ UNSAT	☑ Uninsulated Piping System ~~Bolted Connection~~ SRE 05/02/01	☑ SAT	☐ UNSAT
☐ Insulated Valve Bolted Connection	☐ SAT	☐ UNSAT	☐ Uninsulated Valve Bolted Connection	☐ SAT	☐ UNSAT
☐ Insulated Pump Bolted Connection	☐ SAT	☐ UNSAT	☐ Uninsulated Pump Bolted Connection	☐ SAT	☐ UNSAT
☐ Insulated Vessel Bolted Connection	☐ SAT	☐ UNSAT	☐ Uninsulated Vessel Bolted Connection	☐ SAT	☐ UNSAT

This examination area ☑ does ☐ does not contain borated water

Explain all UNSAT areas below or on attached sheets.

Comments

Component	Pressure Test	ISI Bdry Dwg No.	Coord	Loc Dwg	Evaluation/ Insulation/ Notes	Remarks
~~1" CCA-4 (LOOP 3)~~	~~160.1-1~~	~~D-356354-1~~	~~B-10~~	~~E7525~~	~~1A/Y/6~~	~~FROM 2" CCA-17 TO CVCS EX. LETDOWN~~
	~~160.1-1~~	~~D-356356-1~~	~~C-6~~	~~E7526~~	~~1A/Y/6~~	~~TESTED TO QV247~~
~~1" CCA-31~~	~~160.1-1~~	~~D-356354-1~~	~~D-7~~	~~E8042~~	~~1A/Y/6~~	~~R. V. VENT LINE, TO VALVE QV014A~~
~~¾" CCA-31~~	~~160.1-1~~	~~D-356354-1~~	~~E-7~~	~~E7558,E8042~~	~~1A/Y/6~~	~~R. V. VENT LINE, TO VALVE QV014A~~
~~1" CCA-47A (LOOP 1)~~	~~160.1-1~~	~~D-356356-1~~	~~F-5~~	~~E7886~~	~~1A/Y/6~~	
~~¾" CCB-47A~~	~~160.1-1~~	~~D-356356-1~~	~~F-5~~	~~E7886~~	~~1A/Y/6~~	~~CLASS 2 HYDRO TESTED WITH CLASS 1 TO QV102A, QV103A. (E21 SYS)~~
~~1" CCB-47A~~	~~160.1-1~~	~~D-356356-1~~	~~F-5~~	~~E7886~~	~~1A/Y/6~~	~~CLASS 2 HYDRO TESTED WITH CLASS 1. (E21 SYS)~~
~~1" CCA-47B (LOOP 2)~~	~~160.1-1~~	~~D-356356-1~~	~~F-5~~	~~E7887~~	~~1A/Y/6~~	
~~¾" CCB-47B~~	~~160.1-1~~	~~D-356356-1~~	~~F-5~~	~~E7887~~	~~1A/Y/6~~	~~CLASS 2 HYDRO TESTED WITH CLASS 1. (E21 SYS)~~
~~1" CCB-47 (B)~~	~~160.1-1~~	~~D-356356-1~~	~~F-5~~	~~E7887~~	~~1A/Y/6~~	~~CLASS 2 HYDRO TESTED WITH CLASS 1. (E21 SYS)~~
~~1" CCA-47C (LOOP 3)~~	~~160.1-1~~	~~D-356356-1~~	~~F-5~~	~~E7841~~	~~1A/Y/6~~	
~~1" CCB-47C~~	~~160.1-1~~	~~D-356356-1~~	~~F-5~~	~~E7841~~	~~1A/Y/6~~	~~CLASS 2 HYDRO TESTED WITH CLASS 1. (E21 SYS)~~
~~¾" CCB-47C~~	~~160.1-1~~	~~D-356356-1~~	~~F-5~~	~~E7841~~	~~1A/Y/6~~	~~CLASS 2 HYDRO TESTED WITH CLASS 1 TO QV102C, QV103C (E21 SYS)~~
~~1" CCB-63 (A)~~	~~160.1-1~~	~~D-356354-1~~	~~E-7~~	~~E8042~~	~~1A/Y/6~~	~~CLASS 2 HYDRO TESTED WITH CLASS 1.~~
~~1" CCB-63 (B)~~	~~160.1-1~~	~~D-356354-1~~	~~E-8~~	~~E8042~~	~~1A/Y/6~~	~~CLASS 2 HYDRO TESTED WITH CLASS 1.~~
~~2" CCA-9 (LOOP 2)~~	~~160.1-1~~	~~D-356356-1~~	~~C-3~~	~~E7817,E7818~~	~~1A/Y/6~~	
2" CCA-21 (LOOP 1)	160.1-1	D-356355-1	E-2	E7803	1A/Y/6	
2" CCB-21 (L1)	160.1-1	D-356355-1	F-3	E7803,E7804, E7805,E7806	1A/Y/6	CLASS 2 HYDRO TESTED WITH CLASS 1, (E21 SYS)
3" CCB-21	160.1-1	D-356355-1	F-4	EG2-423	1A/Y/6	CLASS 2 HYDRO TESTED WITH CLASS 1, TESTED TO CTMT WALL, PENETRATION (NO. 19) (LOOP 1) (E21 SYS)

Component	Pressure Test	ISI Bdry Dwg No.	Coord	Loc Dwg	Evaluation/ Insulation/ Notes	Remarks
2" CCA-21 (LOOP 2)	160.1-1	D-356355-1	D-2	E7807	1A/Y/6	TO Q2E21V062B
2" CCB-21 (L2)	160.1-1	D-356355-1	F-3	E7806	1A/Y/6	CLASS 2 HYDRO TESTED WITH CLASS 1. (LOOP 2) TO (E21 SYS)
2" CCA-21 (LOOP 3)	160.1-1	D-356355-1	C-3	E7808	1A/Y/6	TO QV062A
2" CCB-21 (L3)	160.1-1	D-356355-1	E-4	E7806	1A/Y/6	CLASS 2 HYDRO TESTED WITH CLASS 1. (LOOP 3) TO (E21 SYS)
2" CCA-26 (LOOP 1)	160.1-1	D-356355-1	C-3	E7862	1A/Y/6	
2" CCB-22 (L1)	160.1-1	D-356355-1	C-4	E7861	1A/Y/6	CLASS 2 HYDRO TESTED WITH CLASS 1. (LOOP 1) (E21 SYS). SEE RR-30.
3" CCB-22	160.1-1	D-356355-1	B-5	EG2-415	1A/Y/6	CLASS 2 HYDRO TESTED WITH CLASS 1 THRU PENETRATION (NO. 20) (LOOP 1) TO QV063 (E21 SYS). SEE RR-30.
2" CCA-26 (LOOP 2)	160.1-1	D-356355-1	B-3	E7862	1A/Y/6	TESTED TO Q2E21QV066B
2" CCB-22 (L2)	160.1-1	D-356355-1	B-5	E7861	1A/Y/6	CLASS 2 HYDRO TESTED WITH CLASS 1. (LOOP 2) (E21 SYS). SEE RR-30.
2" CCA-26 (LOOP 3)	160.1-1	D-356355-1	C-3	E7862	1A/Y/6	TESTED TO Q2E21QV066A
2" CCB-22 (L3)	160.1-1	D-356355-1	A-5	E7861	1A/Y/6	CLASS 2 HYDRO TESTED WITH CLASS 1. (LOOP 3) (E21 SYS). SEE RR-30.
2" CCA-29 (LOOP 1)	160.1-1	D-356355-1	G-4	E7812	1A/Y/6	TO 6" CCA-27 (EG2-408)
2" CCB-30 (L1)	160.1-1	D-356355-1	G-4	E7809	1A/Y/6	CLASS 2 HYDRO TESTED WITH CLASS 1. (LOOP 1) TO QV078A (E21 SYS)
3" CCB-30 (L1)	160.1-1	D-356355-1	G-3	EG2-413	1A/Y/6	CLASS 2 HYDRO TESTED WITH CLASS 1, PENETRATION (NO. 81) (LOOP 1) TO QV068 (E21 SYS). SEE RR-30.
2" CCB-30 (L2)	160.1-1	D-356355-1	H-3	E7809	1A/Y/6	CLASS 2 HYDRO TESTED WITH CLASS 1. (LOOP 2) TO QV078B (E21 SYS)
2" CCB-30 (L3)	160.1-1	D-356355-1	H-3	E7809	1A/Y/6	CLASS 2 HYDRO TESTED WITH CLASS 1. (LOOP 3) TO QV078C (E21 SYS)

Component	Pressure Test	ISI Bdry Dwg No.	Coord	Loc Dwg	Evaluation/ Insulation/ Notes	Remarks
2" CCA-29 (LOOP 2)	160.1-1	D-356355-1	G-3	E7812	1A/Y/6	TESTED TO Q2E21V078B
2" CCA-30 (LOOP 1)	160.1-1	D-356355-1	G-3	E7812	1A/Y/6	TO 6" CCA-27 (EG2-408)
2" CCB-31 (L1)	160.1-1	D-356355-1	H-2	E7811	1A/Y/6	CLASS 2 HYDRO TESTED WITH CLASS 1. (LOOP 1) TO QV079A (E21 SYS)
2" CCB-31 (L2)	160.1-1	D-356355-1	H-2	E7811	1A/Y/6	CLASS 2 HYDRO TESTED WITH CLASS 1. (LOOP 2) TO QV079B (E21 SYS)
2" CCB-31 (L3)	160.1-1	D-356355-1	H-2	E7811	1A/Y/6	CLASS 2 HYDRO TESTED WITH CLASS 1. (LOOP 3) TO QV079C (E21 SYS)
3" CCB-31 (L1)	160.1-1	D-356355-1	J-5	EG2-415	1A/Y/6	CLASS 2 HYDRO TESTED WITH CLASS 1 THRU PENETRATION (NO. 80) TO QV072 (LOOP 1) (E21 SYS). SEE RR-30.
2" CCA-30 (LOOP 2)	160.1-1	D-356355-1	G-2	E7812	1A/Y/6	TESTED TO Q2E21V079B
~~3" CCA-5 (LOOP 1)~~	~~160.1-1~~	~~D-356354-1~~	~~A-2~~	~~EG2-113,EG2-608~~	~~1A/Y/6~~	
~~→~~	~~160.1-1~~	~~D-356356-1~~	~~A-2~~	~~EG2-608~~	~~1A/Y/6~~	
~~2" CCA-17~~	~~160.1-1~~	~~D-356354-1~~	~~A-2~~	~~E7616~~	~~1A/Y/6~~	~~TESTED TO VALVE QV001A~~
~~3" CCA-6 (LOOP 1)~~	~~160.1-1~~	~~D-356354-1~~	~~C-5~~	~~EG2-101,EG2-608~~	~~1A/Y/6~~	
~~→~~	~~160.1-1~~	~~D-356356-1~~	~~A-2~~	~~EG2-608~~	~~1A/Y/6~~	
~~3" CCB-9~~	~~160.1-1~~	~~D-356356-1~~	~~B-3~~	~~EG2-606~~	~~1A/Y/6~~	~~CLASS 2 HYDRO TESTED WITH CLASS 1 BETWEEN QV243 & QV113 (E21 SYS)~~
~~2" CCA-7 (LOOP 2)~~	~~160.1-1~~	~~D-356354-1~~	~~G-4~~	~~EG2-100~~	~~1A/Y/6~~	
~~→~~	~~160.1-1~~	~~D-356356-1~~	~~B-2~~	~~EG2-608~~	~~1A/Y/6~~	
~~¾" CCB-45~~	~~160.1-1~~	~~D-356356-1~~	~~B-4~~	~~E7819~~	~~1A/Y/6~~	~~CLASS 2 HYDRO TESTED WITH CLASS 1. (E21 SYS)~~
~~3" CCB-10~~	~~160.1-1~~	~~D-356356-1~~	~~B-4~~	~~EG2-606~~	~~1A/Y/6~~	~~CLASS 2 HYDRO TESTED WITH CLASS 1. (E21 SYS)~~
3" CCB-21 (E)	160.1-1	D-356355-1	F-6	EG2-421,EG2-423	1A/Y/6	TESTED TO VALVE QV016A,B (G-7). SEE RR-30.

Component	Pressure Test	ISI Bdry Dwg No.	Coord	Loc Dwg	Evaluation/ Insulation/ Notes	Remarks
¾" CCB-21	160.1-1	D-356355-1	D-6	EG2-421,EG2-423	1A/Y/6	TO VALVE QV009
1" CCB-23	160.1-1	D-356355-1	D-6	EG2-421,EG2-423	1A/Y/6	
~~4" CCB-15 (LOOP 1)~~	~~160.1-1~~	~~D-356354-1~~	~~B-5~~	~~EG2-112~~	~~1A/Y/6~~	~~TO PRESSURIZER SPRAY.~~
~~>~~	~~160.1-1~~	~~D-356354-2~~	~~F-7~~	~~EG2-112~~	~~1A/Y/6~~	
~~¾" CCB-57~~	~~160.1-1~~	~~D-356354-2~~	~~E-7~~	~~E7514~~	~~1A/Y/6~~	~~CLASS 2 HYDRO TESTED WITH CLASS 1.~~
~~4" CCB-15 (LOOP 2)~~	~~160.1-1~~	~~D-356354-1~~	~~G-4~~	~~EG2-112~~	~~1A/Y/6~~	~~TO PRESSURIZER SPRAY.~~
~~>~~	~~160.1-1~~	~~D-356354-2~~	~~F-8~~	~~EG2-112~~	~~1A/Y/6~~	
~~¾" CCB-57.~~	~~160.1-1~~	~~D-356354-2~~	~~F-7~~	~~E7514~~	~~1A/Y/6~~	~~CLASS 2 HYDRO TESTED WITH CLASS 1.~~
~~2" CCA-15~~	~~160.1-1~~	~~D-356354-2~~	~~E-6~~	~~E7816~~	~~1A/Y/6~~	~~TO Q2E21V109~~
~~6" CCA-20 (A)~~	~~160.1-1~~	~~D-356354-2~~	~~E-4~~	~~EG2-453~~	~~1A/Y/6~~	~~TO PRESSURIZER RELIEF TANK~~
~~¾" CCB-39~~	~~160.1-1~~	~~D-356354-2~~	~~D-4~~	~~EG2-453~~	~~1A/Y/6~~	~~TESTED TO VALVE QV030A~~
~~6" CCA-20 (B)~~	~~160.1-1~~	~~D-356354-2~~	~~D-4~~	~~EG2-453~~	~~1A/Y/6~~	~~TO PRESSURIZER RELIEF TANK~~
~~¾" CCB-39~~	~~160.1-1~~	~~D-356354-2~~	~~D-3~~	~~EG2-453~~	~~1A/Y/6~~	~~TESTED TO VALVE QV030B~~
~~6" CCA-20 (C)~~	~~160.1-1~~	~~D-356354-2~~	~~E-3~~	~~EG2-453~~	~~1A/Y/6~~	~~TO PRESSURIZER RELIEF TANK~~
~~¾" CCB-39~~	~~160.1-1~~	~~D-356354-2~~	~~D-2~~	~~EG2-453~~	~~1A/Y/6~~	~~TESTED TO VALVE QV030C~~
~~6" CCA-20 (RL)~~	~~160.1-1~~	~~D-356354-2~~	~~E-3~~	~~EG2-453~~	~~1A/Y/6~~	~~TO PRESSURIZER RELIEF TANK~~
~~3" CCA-20 (A)~~	~~160.1-1~~	~~D-356354-2~~	~~D-2~~	~~EG2-453~~	~~1A/Y/6~~	~~TESTED TO VALVES QV053~~
~~3" CCA-20 (B)~~	~~160.1-1~~	~~D-356354-2~~	~~E-2~~	~~EG2-453~~	~~1A/Y/6~~	~~TESTED TO VALVES QV061~~
~~6" CCA-22 (LOOP 1)~~	~~160.1-1~~	~~D-356354-1~~	~~B-5~~	~~EG2-101~~	~~1A/Y/6~~	~~FROM SIS HI & LO HD. INJ~~
>	160.1-1	D-356355-1	D-2	EG2-409	1A/Y/6	
>	160.1-1	D-356355-2	H-1	EG2-409	1A/Y/6	
¾" CCB-22	160.1-1	D-356355-2	G-2	E7635,E7864	1A/Y/6	CLASS 2 HYDRO TESTED WITH CLASS 1. (E21 SYS)
6" CCB-32	160.1-1	D-356355-2	G-2	EG2-414	1A/Y/6	CLASS 2 HYDRO TESTED WITH CLASS 1. (E21 SYS)

J. M. Farley Nuclear Plant - Unit 2, Class 1

Component	Pressure Test	ISI Bdry Dwg No.	Coord	Loc Dwg	Evaluation/ Insulation/ Notes	Remarks
8" CCA-22	160.1-1	D-356355-1	D-3	EG2-409	1A/Y/6	
10" CCB-32	160.1-1	D-356355-2	G-3	EG2-414	1A/Y/6	CLASS 2 HYDRO TESTED WITH CLASS 1 THRU PENETRATION (NO. 17) (E21 SYS)
~~6" CCA-22 (LOOP 2)~~	~~160.1-1~~	~~D-356354-1~~	~~G-5~~	~~EG2-100~~	~~1A/Y/6~~	~~FROM SIS HI & LO HD. INJ~~
>	160.1-1	D-356355-1	D-1	EG2-412	1A/Y/6	
>	160.1-1	D-356355-2	F-1	EG2-412	1A/Y/6	
6" CCB-32	160.1-1	D-356355-2	F-2	EG2-414	1A/Y/6	CLASS 2 HYDRO TESTED WITH CLASS 1. (E21 SYS)
4" CCA-22	160.1-1	D-356355-1	D-3	EG2-412	1A/Y/6	
10" CCB-32	160.1-1	D-356355-2	F-2	EG2-414	1A/Y/6	CLASS 2 HYDRO TESTED WITH CLASS 1. (E21 SYS)
~~6" CCA-22 (LOOP 3)~~	~~160.1-1~~	~~D-356354-1~~	~~C-7~~	~~EG2-454~~	~~1A/Y/6~~	~~FROM SIS HI & LO HD. INJ~~
>	160.1-1	D-356355-1	C-2	EG2-454,EG2-411	1A/Y/6	
>	160.1-1	D-356355-2	E-1	EG2-411	1A/Y/6	
6" CCB-32	160.1-1	D-356355-2	E-2	EG2-414	1A/Y/6	CLASS 2 HYDRO TESTED WITH CLASS 1. (E21 SYS)
8" CCA-22	160.1-1	D-356355-1	C-3	EG2-411	1A/Y/6	
10" CCB-32	160.1-1	D-356355-2	F-3	EG2-414	1A/Y/6	CLASS 2 HYDRO TESTED WITH CLASS 1, TO QV023B, THRU PENETRATION (NO. 15) (E21 SYS)
~~6" CCA-27 (LOOP 1)~~	~~160.1-1~~	~~D-356354-1~~	~~D-5~~	~~EG2-101~~	~~1A/Y/6~~	~~FROM SIS HI & LO HD. INJ~~
>	160.1-1	D-356355-1	F-2	EG2-408	1A/Y/6	
6" CCB-29	160.1-1	D-356355-1	F-4	EG2-414	1A/Y/6	CLASS 2 HYDRO TESTED WITH CLASS 1. (E21 SYS)
10" CCB-29	160.1-1	D-356355-2	E-1	EG2-414	1A/Y/6	CLASS 2 HYDRO TESTED WITH CLASS 1, UP TO QV044, PENETRATION (NO. 101) (E21 SYS) SEE RR-30.

FIGURE 1

VISUAL EXAMINATION RECORD VT-2

FARLEY NUCLEAR PLANT

SOUTHERN NUCLEAR OPERATING COMPANY

Unit	TPNS or System No.	Component or System Name	Examination Area Drawing Number	Examination Sheet Number
2	Q2E21	REF. FNP-2-STP-156.3 APPENDIX C	D-356354-1, D-356355-2	1 of 3

Type of Pressure Test

- ☐ System Leakage Test per 1989 Edition of ASME Section XI
- ☐ System Leakage Test per 1992 Edition of ASME Section XI (for Code Case N-416-1 use)
- ☐ System Hydrostatic Test
- ☐ System Functional Test
- ☑ System Inservice Test
- ☐ System Pneumatic Test

WO/WA Number: W00659685

Examiner Signature: SCOTT R. ERICKSON — Scott R. Erickson

Level: II

Date (Month-Day-Year): 05/05/01

Give a brief description of the examination area boundary: SEE ATTACHED SHEETS

Date and Time System to be Examined Put in Service: 05/05/01 03:03 Date and Time of Examination: 05/05/01 03:14

Check each box that applies to the examination area and indicate SAT or UNSAT for each:

☐ Insulated Weld Repair Area	☐ SAT	☐ UNSAT	☐ Uninsulated Weld Repair Area	☐ SAT	☐ UNSAT
☐ Insulated Weld Joint	☐ SAT	☐ UNSAT	☐ Uninsulated Weld Joint	☐ SAT	☐ UNSAT
☐ Insulated Piping System Bolted Connection	☐ SAT	☐ UNSAT	☑ Uninsulated Piping System ~~Bolted Connection~~ SRE 05-02-01	☑ SAT	☐ UNSAT
☐ Insulated Valve Bolted Connection	☐ SAT	☐ UNSAT	☐ Uninsulated Valve Bolted Connection	☐ SAT	☐ UNSAT
☐ Insulated Pump Bolted Connection	☐ SAT	☐ UNSAT	☐ Uninsulated Pump Bolted Connection	☐ SAT	☐ UNSAT
☐ Insulated Vessel Bolted Connection	☐ SAT	☐ UNSAT	☐ Uninsulated Vessel Bolted Connection	☐ SAT	☐ UNSAT

This examination area ☑ does ☐ does not contain borated water

Explain all UNSAT areas below or on attached sheets.

Comments

J. M. Farley Nuclear Plant - Unit 2, Class 1

Component	Pressure Test	ISI Bdry Dwg No.	Coord	Loc Dwg	Evaluation/ Insulation/ Notes	Remarks
~~6" CCA-27 (LOOP 2)~~	~~160.1-1~~	~~D-356354-1~~	~~E-5~~	~~EG2-100~~	~~1A/Y/6~~	~~FROM SIS HI & LO HD. INJ~~
~~>~~	~~160.1-1~~	~~D-356355-1~~	~~G-3~~	~~EG2-412~~	~~1A/Y/6~~	
~~6" CCA-28 (LOOP 3)~~	~~160.1-1~~	~~D-356354-1~~	~~D-7~~	~~EG2-411,EG2-454~~	~~1A/Y/6~~	~~FROM SIS HI & LO HD. INJ~~
~~>~~	~~160.1-1~~	~~D-356355-1~~	~~H-1~~	~~EG2-454~~	~~1A/Y/6~~	
~~2" CCA-28~~	~~160.1-1~~	~~D-356355-1~~	~~G-2~~	~~E7810~~	~~1A/Y/6~~	~~TO QV078C~~
~~2" CCA-38~~	~~160.1-1~~	~~D-356355-1~~	~~G-2~~	~~E7810~~	~~1A/Y/6~~	~~TO QV079C~~
~~12" CCA-16 (B) (LOOP 1)~~	~~160.1-1~~	~~D-356354-1~~	~~C-4~~	~~EG2-101~~	~~1A/Y/6~~	~~TO RHRS~~
~~>~~	~~160.1-1~~	~~D-356358-1~~	~~E-2~~	~~EG2-012~~	~~1A/Y/6~~	
~~¾" CCB-34~~	~~160.1-1~~	~~D-356354-1~~	~~C-4~~	~~EG2-101~~	~~1A/Y/6~~	~~TESTED TO QV013A~~
~~12" CCA-16 (B) (LOOP 3)~~	~~160.1-1~~	~~D-356354-1~~	~~C-8~~	~~EG2-454~~	~~1A/Y/6~~	~~TO RHRS~~
~~>~~	~~160.1-1~~	~~D-356358-1~~	~~G-2~~		~~1A/Y/6~~	
~~¾" CCB-34~~	~~160.1-1~~	~~D-356354-1~~	~~C-9~~	~~EG2-454~~	~~1A/Y/6~~	~~TESTED TO PT 402~~
12" CCA-24 (LOOP 1)	160.1-1	D-356354-1	B-5	EG2-101	1A/Y/6	FROM SIS ACCUMULATOR 1
>	160.1-1	D-356355-2	D-2	EG2-410	1A/Y/6	TESTED TO VALVE Q2E21V037A
¾" CCB-53	160.1-1	D-356355-2	C-2	E7588	1A/Y/6	CLASS 2 HYDRO TESTED WITH CLASS 1 TO VALVE QV054A (E21 SYS)
¾" CCB-54	160.1-1	D-356355-2	D-2	E7588	1A/Y/6	CLASS 2 HYDRO TESTED WITH CLASS 1 TO VALVE QV039A (E21 SYS)
12" CCB-24	160.1-1	D-356355-2	C-3	EG2-424	1A/Y/6	CLASS 2 HYDRO TESTED WITH CLASS 1. (E21 SYS)
12" CCA-24 (LOOP 2)	160.1-1	D-356354-1	G-4	EG2-100	1A/Y/6	FROM SIS ACCUMULATOR NO. 2
>	160.1-1	D-356355-2	D-6	EG2-410	1A/Y/6	
¾" CCB-53	160.1-1	D-356355-2	C-5	E7589	1A/Y/6	CLASS 2 HYDRO TESTED WITH CLASS 1. TO QV054B (E21 SYS)
¾" CCB-54	160.1-1	D-356355-2	D-5	E7589	1A/Y/6	CLASS 2 HYDRO TESTED WITH CLASS 1. TO QV039B (E21 SYS)

Component	Pressure Test	ISI Bdry Dwg No.	Coord	Loc Dwg	Evaluation/ Insulation/ Notes	Remarks
12" CCB-24	160.1-1	D-356355-2	C-5	EG2-424	1A/Y/6	CLASS 2 HYDRO TESTED WITH CLASS 1. (E21 SYS)
12" CCA-24 (LOOP 3)	160.1-1	D-356354-1	A-7	EG2-454	1A/Y/6	FROM SIS ACCUMULATOR NO. 3
>	160.1-1	D-356355-2	E-2	EG2-410,EG2-454	1A/Y/6	
¾" CCB-53	160.1-1	D-356355-2	D-7	E7590	1A/Y/6	CLASS 2 HYDRO TESTED WITH CLASS 1 TO QV054C. (E21 SYS)
¾" CCB-54	160.1-1	D-356355-2	E-7	E7590	1A/Y/6	CLASS 2 HYDRO TESTED WITH CLASS 1 TO QV039C. (E21 SYS)
12" CCB-24	160.1-1	D-356355-2	D-8	EG2-424	1A/Y/6	CLASS 2 HYDRO TESTED WITH CLASS 1, TO QV038C. (E21 SYS)
~~14" CCA-18 (LOOP 2)~~	~~160.1-1~~	~~D-356354-1~~	~~F-3~~	~~E5365~~	~~1A/Y/6~~	~~PRESSURIZER SURGE LINE~~
~~>~~	~~160.1-1~~	~~D-356354-2~~	~~J-6~~	~~E5365~~	~~1A/Y/6~~	
~~27.5" CCA-10 (LOOP 1)~~	~~160.1-1~~	~~D-356354-1~~	~~B-4~~	~~E5366~~	~~1A/Y/6~~	~~RC PUMP 2A TO REACTOR VESSEL (COLD LEG)~~
~~27.5" CCA-10 (LOOP 2)~~	~~160.1-1~~	~~D-356354-1~~	~~G-5~~	~~E5367~~	~~1A/Y/6~~	~~RCP 2B TO REACTOR VESSEL~~
~~27.5" CCA-10 (LOOP 3)~~	~~160.1-1~~	~~D-356354-1~~	~~B-9~~	~~E5368~~	~~1A/Y/6~~	~~REACTOR COOLANT PUMP 2C TO REACTOR VESSEL~~
~~29" CCA-11 (LOOP 1)~~	~~160.1-1~~	~~D-356354-1~~	~~C-5~~	~~E5366~~	~~1A/Y/6~~	~~REACTOR VESSEL TO S/G 2A (HOT LEG)~~
~~29" CCA-11 (LOOP 2)~~	~~160.1-1~~	~~D-356354-1~~	~~E-5~~	~~E5367~~	~~1A/Y/6~~	~~REACTOR VESSEL TO S/G 2~~
~~29" CCA-11 (LOOP 3)~~	~~160.1-1~~	~~D-356354-1~~	~~C-8~~	~~E5368~~	~~1A/Y/6~~	~~REACTOR VESSEL TO STEAM GENERATOR 2C~~
~~31" CCA-12 (LOOP 1)~~	~~160.1-1~~	~~D-356354-1~~	~~C-1~~	~~E5366~~	~~1A/Y/6~~	~~STEAM GENERATOR 2A TO RC PUMP 2A SUCTION.~~
~~¾" CCB-33~~	~~160.1-1~~	~~D-356354-1~~	~~C-2~~	~~E7607~~	~~1A/Y/6~~	~~CLASS 2 HYDRO TESTED WITH CLASS 1. TO VALVES QV008A, QV009A, QV010A, QV011A~~
~~¾" CCB-27~~	~~160.1-1~~	~~D-356354-1~~	~~H-2~~	~~E7616~~	~~1A/Y/6~~	~~TESTED TO VALVE QV012~~
~~31" CCA-12 (LOOP 2)~~	~~160.1-1~~	~~D-356354-1~~	~~G-1~~	~~E5367~~	~~1A/Y/6~~	

NO EXAMINATIONS SCHEDULED THIS OUTAGE

NO EXAMINATIONS SCHEDULED THIS OUTAGE

EXAMINATION SUMMARY
FOR UNIT 2
INTERVAL 2 PERIOD 3 OUTAGE 3

DRAWING APR2-4504
RHR TRAIN A

ITEM NO	VOLUMERIC			SURFACE			VISUAL			REMARKS
	NI	NRI	RI	NI	NRI	RI	NI	NRI	RI	
1		X								See Tab E
2	X									See Tab E
3		X								See Tab E

AUXILIARY
EL. 83'-0"
ROOM 2131

RHR TRAIN A

APR2-4504

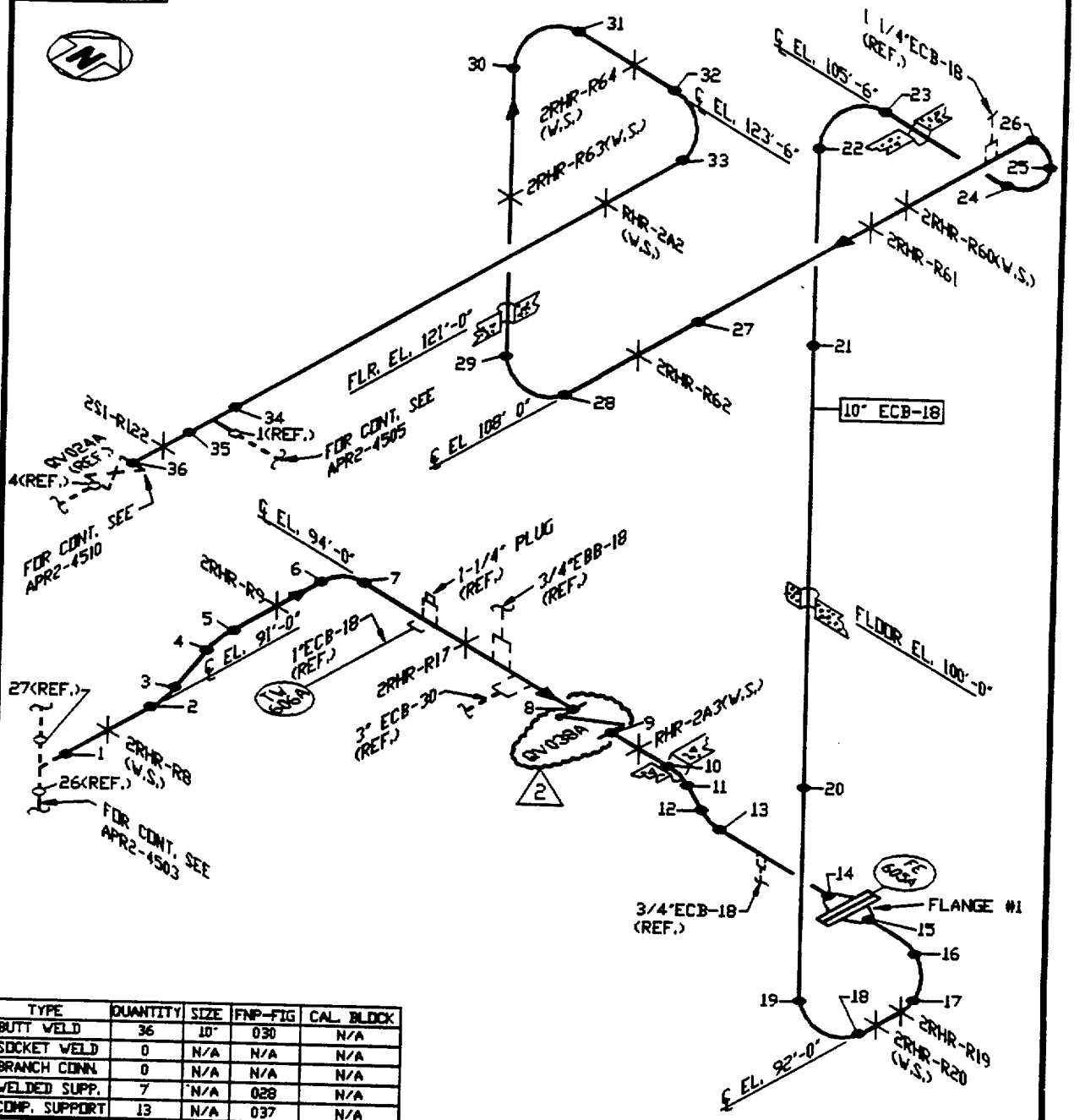

TYPE	QUANTITY	SIZE	FNP-FIG	CAL. BLOCK
BUTT WELD	36	10"	030	N/A
SOCKET WELD	0	N/A	N/A	N/A
BRANCH CONN.	0	N/A	N/A	N/A
WELDED SUPP.	7	N/A	028	N/A
COMP. SUPPORT	13	N/A	037	N/A

LINE NUMBER: Q-2-E11-ECB-18

LINE SIZE: 10" ECB-18

BOUNDARY DIAGRAM	D-356358
REFERENCE ISO'S	D-515283 SH. 1
	D-515277 SH. 1

REV.	DATE	BY	CHK'D	DESCRIPTION	APPR.1	APPR.2	APPR.3	APPR.4
2	11-18-97	RAW	JAR	REVISED PER REA 96-1295 REV. 0	DEW			
0	11-22-91	SDH	JAR	ISSUED PER PCN S-91-2-7763.	CAB	FOR VRH	AH	DML

Southern Company Services, Inc. for

ALABAMA POWER COMPANY
JOSEPH M. FARLEY NUCLEAR PLANT
UNIT 2

E11-RESIDUAL HEAT REMOVAL

SCS DRAWING NUMBER	SHEET	REV.
A-356454	103	2

CAD AUTOCAD APR24504 RAV-02

SHARED

Farley Nuclear Plant
Ultrasonic Calibration and Examination Record

FNP-0-NDE-100.44
Southern Nuclear Operating Company

Unit	Sketch/Component Number	Date	Sheet No.
2	APR2-4504-1	03/09/01	S01F2U020 Page 1 of 1

Procedure/Rev./TCN	Couplant/Batch No.	ThermometerSN/Cal Due Date	Linearity Sheet No.
FNP-0-NDE-100.44 / 0 / N/A	Ultragel II / 00125	213305 01/25/02	S01F2L004

Instrument

Make/Model: Staveley / SONIC 136
Serial No.: 136-905K

	Ax dB	Circ dB
Reference	32.5	37.6
Scanning	47	51.6
Pulser	222ns	

Frequency 2.25 Rep Rate 4khz
Mode P/E Filter 2
Damping 500oh Reject off

Search Unit

Transducer Mfg. KBA
Serial No. 031296
Model No. MSWQC
Size / No. .375 Shape / Round
Frequency/Mode 2.25 / Shear
"A" Dimension .25
Nom Angle 45 Meas Angle 44
Cable Type /No. Conn. RG174 / 0
Cable Length 6'

Calibration Block

Cal. Blk. No. ALA-13
Thickness 0.365
Cal. Temp 80 °F
Cal. In 8:09:00 AM
Cal. Chk. 1015
Cal. Out 1:18:00 PM
Ref. Blk. No. 801101
Reflector/dB Hole / 41.2
Amp/Sweep 80 % 2,2

Axial Scans Calibration

Cal. Refl.	Signal Amp.	Sweep Div.	Wmax
ID	80	2.5	.35
OD	48	5.0	.58
ID	35	7.4	.85

Circ Scans Calibration

Cal. Refl.	Signal Amp.	Sweep Div.	Wmax
ID	75	2.8	.45
OD	80	5.4	.88
ID	30	8.4	1.29

Calibration Remarks:
Lamination scan performed.

Comp Temp. 80 °F Configuration - TEE TO PIPE Wo Loc. Weld C/L Lo Loc. 90° *

Scan Dir.	Results NI	NRI	RI	Ind No.	% DAC	Length L1	Lmax	L2	Ref. Measurements Wmax	Smax	Thickness 1"<--	C/L	-->1"	Notes:
8	●	○	○											
7	●	○	○											
5	●	○	○											
2	○	●	○											

Examination/Limitation Remarks: ID GEO ON PIPE SIDE BELOW RECORDABLE LEVELS / EXAMINED 6" BASE MATERIAL AS REQUESTED BY SNC *Vstamped at 90 deg. From TDC due to limited access at TDC.

Total Length of Weld 34" Crown Width .6
Total Length of Weld Examined: 5 (L) 34 2 (L) 34 7 and 8 (W) 34
Extent of Perpendicular Scans (W): 5- From NL to NL 2- From NL to NL
Extent of Parallel Scans (L): From (5) NL to (2) NL

Primary Examiner	Level	Initials	Assistant Examiner	Level	Initials	Non-Technical Review	Date
Tommy Jackson	II	[illegible]	John W. Bell	II	JWB	[illegible]	3-13-01

SNC NDE Level II/III Review [illegible] Date Lv. III 3-12-01 Percentage of Code Coverage 100 ANII Review N/A Date

Revision 0

Farley Nuclear Plant
Ultrasonic Weld Profile Report

SHARED

FNP-0-NDE-100.35
Southern Nuclear Operating Company

Plant/Unit Farley / 2	**Weld Number** APR2-4504-1	**Sheet Number** S01F2U035	**Date** 3/9/01
ISO/Drawing Number APR2-4504	**Couplant/Batch Number** Ultragel II / 00125	**Instrument Manufacturer** Staveley	
Material Type SS Step Wedge	**Calibration Standard/Serial Number** 800887	**Model Number** SONIC 136	**Serial Number** 136-905K
Examiner Tommy Jackson LJ	**SNT Level** II	**Search Unit Manufacturer** KBA	**Type** ADP **Size** .25
Examiner John W. Bell JWB	**SNT Level** II	**Serial Number** 009KJ7	**Frequency** 5.0 **MHz**
Weld Examination Record No. NA	**Indication No.** NA	**Component Configuration/Flow** see below	
Location **LMAX** TDC **WMAX** weld ℄		**Component Temp °F** 80	**Thermometer S/N** PTC 213305

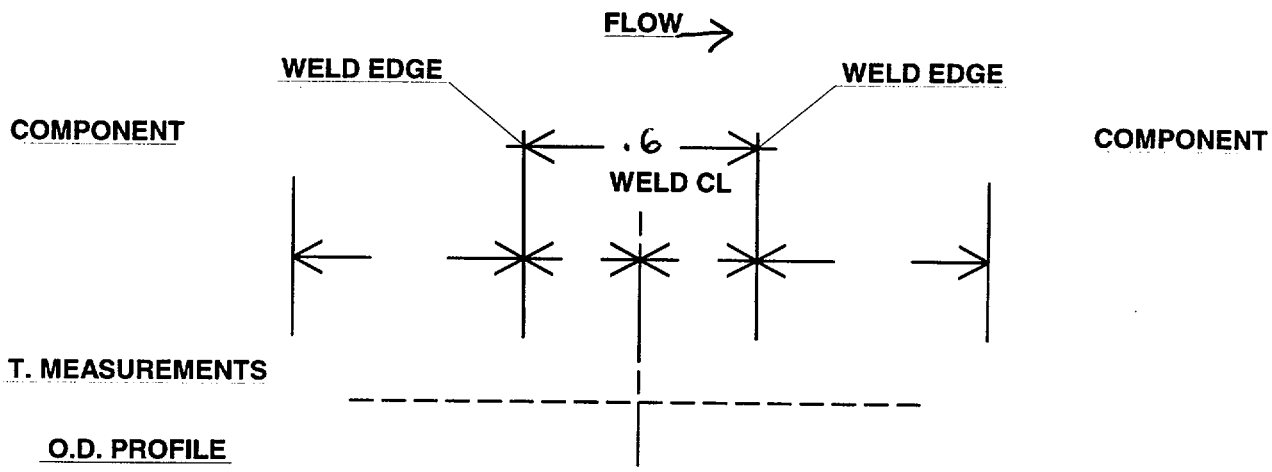

T. MEASUREMENTS

O.D. PROFILE

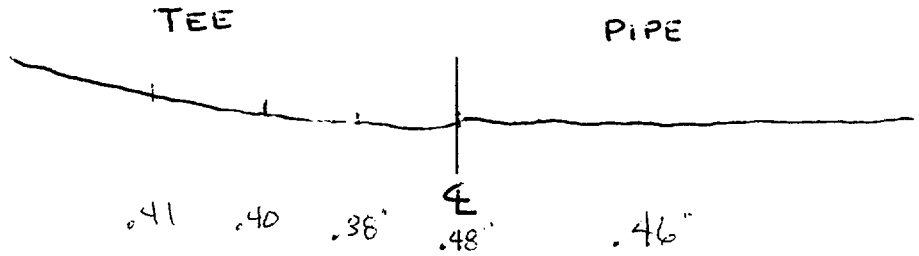

T. MEASUREMENT EACH _____ **IN.**

REMARKS: NA

NDE LII/III Review	Level	Date	Non-Technical Review	Date
J. Eric Pyscock	III	3-12-01	Danny A. Loftus	3-12-01

Revision 1

SHARED

Farley Nuclear Plant
Ultrasonic Calibration and Examination Record

FNP-0-NDE-100.44
Southern Nuclear Operating Company

Unit	Sketch/Component Number	Date	Sheet No.
2	APR2-4504-2	03/09/01	S01F2U022 Page 1 of 1

Procedure/Rev./TCN	Couplant/Batch No.	ThermometerSN/Cal Due Date	Linearity Sheet No.
FNP-0-NDE-100.44 / 0 / N/A	Ultragel II / 00125	213305 01/25/02	S01F2L004

Instrument

Make/Model	Staveley / SONIC 136	
Serial No.	136-905K	
	Ax dB	Circ dB
Reference	32.4	37.6
Scanning	47	51.6
Pulser	222NS	
Frequency	2.25	Rep Rate 4khz
Mode	P/E	Filter 2
Damping	500oh	Reject off

Search Unit

Transducer Mfg.	KBA
Serial No.	031296
Model No.	MSWQC
Size / No.	.375
Shape	Round
Frequency/Mode	2.25 / Shear
"A" Dimension	.25
Nom Angle	45
Meas Angle	44
Cable Type /No. Conn.	RG174 / 0
Cable Length	6'

Calibration Block

Cal. Blk. No.	ALA-13
Thickness	0.365
Cal. Temp	80 °F
Cal. In	8:09:00 AM
Cal. Chk.	1015
Cal. Out	1:18:00 PM
Ref. Blk. No.	801101
Reflector/dB	HOLE / 41.2
Amp/Sweep	80 % 2.2

Axial Scans Calibration

Cal. Refl.	Signal Amp.	Sweep Div.	Wmax
ID	80	2.5	.35
OD	48	5.0	.58
ID	35	7.4	.85

Circ Scans Calibration

Cal. Refl.	Signal Amp.	Sweep Div.	Wmax
ID	75	2.8	.45
OD	80	5.4	.88
ID	30	8.4	1.29

Calibration Remarks:
LAMINATION SCAN PERFORMED.

Comp Temp. 80 °F **Configuration -** PIPE TO ELBOW **Wo Loc.** C/L **Lo Loc.** TDC

Scan Dir.	Results NI	NRI	RI	Ind No.	% DAC	Length L1	Lmax	L2	Ref. Measurements Wmax	Smax	Thickness 1"<-	C/L	->1"	Notes:
8	●	○	○											
7	●	○	○											
5	●	○	○											
2	●	○	○											

Examination/Limitation Remarks: EXAMINED 6" BASE MATERIAL AS REQUESTED BY SNC

Total Length of Weld 34" **Crown Width** .6 **Total Length of Weld Examined** 5 (L) 34 2 (L) 34 7 and 8 (W) 34 **Extent of Perpendicular Scans (W)** 5- From NL to NL 2- From NL to NL **Extent of Parallel Scans (L)** From (5) NL to (2) NL

Primary Examiner	Level	Initials	Assistant Examiner	Level	Initials	Non-Technical Review	Date
Tommy Jackson	II	[illegible]	John W. Bell	II	JWB	[illegible]	3-13-01

SNC NDE Level II/III Review [illegible] **Date** Lv III 3-12-01 **Percentage of Code Coverage** 100 **ANII Review** N/A **Date**

Revision 0

Farley Nuclear Plant
Ultrasonic Weld Profile Report

SHARED

FNP-0-NDE-100.35
Southern Nuclear Operating Company

Plant/Unit Farley / 2	**Weld Number** APR2-4504-2	**Sheet Number** S01F2U036	**Date** 03/09/01
ISO/Drawing Number APR2-4504	**Couplant/Batch Number** Ultragel II / 00125	**Instrument Manufacturer** Staveley	
Material Type SS Step Wedge	**Calibration Standard/Serial Number** 800887	**Model Number** SONIC 136	**Serial Number** 136-905K
Examiner Tommy Jackson TJ	**SNT Level** II	**Search Unit Manufacturer** KBA	**Type** ADP **Size** .25
Examiner John W. Bell JWB	**SNT Level** II	**Serial Number** 009KJ7	**Frequency** 5.0 **MHz**
Weld Examination Record No. NA	**Indication No.** NA	**Component Configuration/Flow** see below	
Location **LMAX** TDC - 0° **WMAX** C/L		**Component Temp °F** 80	**Thermometer S/N** PTC 213305

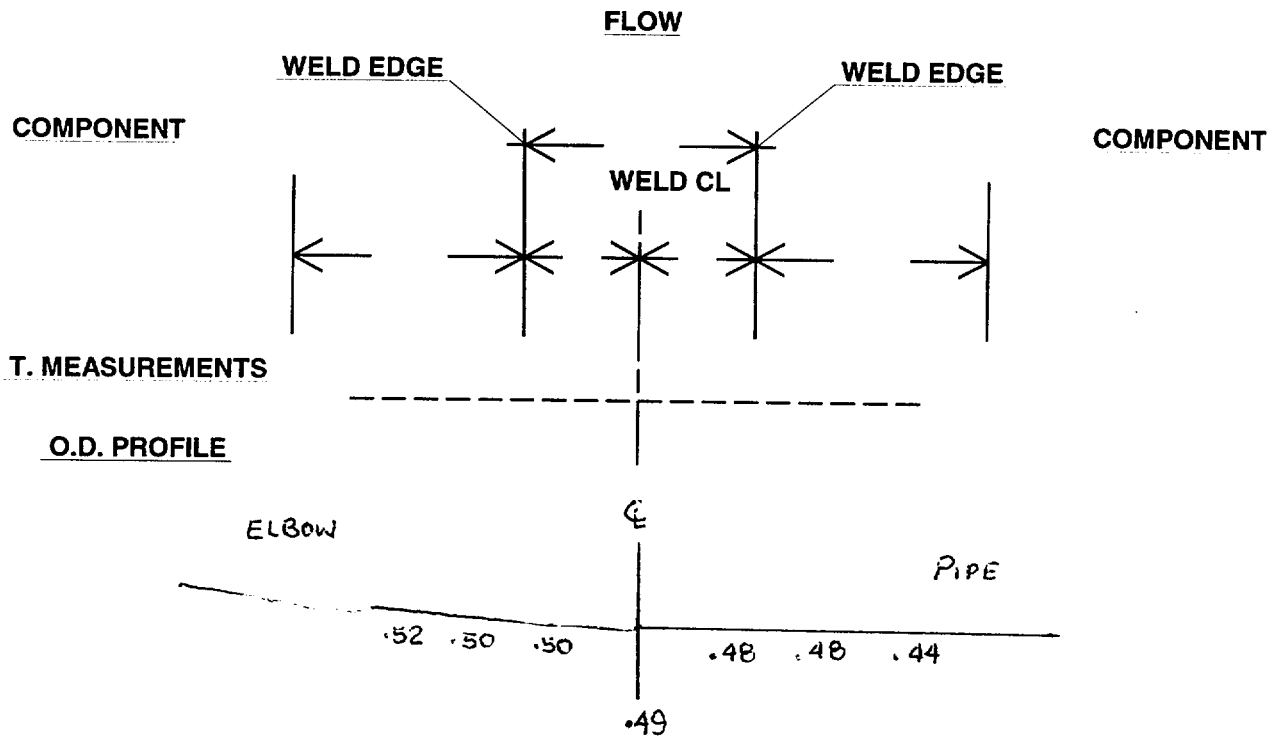

T. MEASUREMENT EACH As Shown **IN.**

REMARKS: NA

NDE LII/III Review	Level	Date	Non-Technical Review	Date
J. Eric Aycock	III	3-13-01	Lynda Duke	3-13-01

Revision 1

SHARED

Farley Nuclear Plant
Ultrasonic Calibration and Examination Record

FNP-0-NDE-100.44
Southern Nuclear Operating Company

Unit	Sketch/Component Number	Date	Sheet No.
2	APR2-4504-3	03/09/01	S01F2U024 Page 1 of 1

Procedure/Rev./TCN	Couplant/Batch No.	ThermometerSN/Cal Due Date	Linearity Sheet No.
FNP-0-NDE-100.44 / 0 / N/A	Ultragel II / 00125	213305 01/25/02	S01F2L004

Instrument

Make/Model	Staveley / SONIC 136		
Serial No.	136-905K		
	Ax dB	Circ dB	
Reference	32.4	37.6	
Scanning	47	51.6	
Pulser	222NS		
Frequency	2.25	Rep Rate	4khz
Mode	P/E	Filter	2
Damping	500oh	Reject	off

Search Unit

Transducer Mfg.	KBA		
Serial No.	031296		
Model No.	MSWQC		
Size / No.	.375	Shape /	Round
Frequency/Mode	2.25 / Shear		
"A" Dimension	.25		
Nom Angle	45	Meas Angle	44
Cable Type /No. Conn.	RG174 / 0		
Cable Length	6'		

Calibration Block

Cal. Blk. No.	ALA-13		
Thickness	0.365		
Cal. Temp	80 °F		
Cal. In	8:09:00 AM		
Cal. Chk.	1015		
Cal. Out	1:18:00 PM		
Ref. Blk. No.	801101		
Reflector/dB	HOLE / 41.2		
Amp/Sweep	80 %	2.2	

Axial Scans Calibration

Cal. Refl.	Signal Amp.	Sweep Div.	Wmax
ID	80	2.5	.35
OD	48	5.0	.58
ID	35	7.4	.85

Circ Scans Calibration

Cal. Refl.	Signal Amp.	Sweep Div.	Wmax
ID	75	2.8	.45
OD	80	5.4	.88
ID	30	8.4	1.29

Calibration Remarks:
LAMINATION SCANNED PERFORMED

Comp Temp. 80 °F **Configuration -** ELBOW TO PIPE **Wo Loc.** Weld C/L **Lo Loc.** TDC

Scan Dir.	Results NI	NRI	RI	Ind No.	% DAC	Length L1	Lmax	L2	Ref. Measurements Wmax	Smax	Thickness 1"<--	C/L	-->1"	Notes:
8	●	○	○											
7	●	○	○											
5	○	●	○											
2	●	○	○											

Examination/Limitation Remarks: ID GEO ON ELBOW SIDE BELOW RECORDABLE LEVELS / EXAMINED 6" BASE MATERIAL AS REQUESTED BY SNC

Total Length of Weld 34" **Crown Width** .6 **Total Length of Weld Examined** 5 (L) 34 2 (L) 34 7 and 8 (W) 34 **Extent of Perpendicular Scans (W)** 5- From NL to NL 2- From NL to NL **Extent of Parallel Scans (L)** From (5) NL to (2) NL

Primary Examiner	Level	Initials	Assistant Examiner	Level	Initials	Non-Technical Review	Date
Tommy Jackson	II	[illegible]	John W. Bell	II	JWB	[illegible]	3-13-01

SNC NDE Level II/III Review [illegible] **Date** Lv. III 3-12-01 **Percentage of Code Coverage** 100 **ANII Review** N/A **Date**

Revision 0

Farley Nuclear Plant
Ultrasonic Weld Profile Report

SHARED

FNP-0-NDE-100.35
Southern Nuclear Operating Company

Plant/Unit Farley / 2	**Weld Number** APR2-4504-3	**Sheet Number** S01F2U037	**Date** 3/9/01
ISO/Drawing Number APR2-4504	**Couplant/Batch Number** Ultragel II / 00125	**Instrument Manufacturer** Staveley	
Material Type CS Step Wedge	**Calibration Standard/Serial Number** 800885	**Model Number** SONIC 136	**Serial Number** 136-905K
Examiner Tommy Jackson JJ	**SNT Level** II	**Search Unit Manufacturer** KBA	**Type** ADP **Size** .25
Examiner John W. Bell JWB	**SNT Level** II	**Serial Number** 009KJ7	**Frequency** 5.0 MHz
Weld Examination Record No. NA	**Indication No.** NA	**Component Configuration/Flow** see below	
Location LMAX 0° - TDC WMAX weld ℄		**Component Temp °F** 80	**Thermometer S/N** PTC 213305

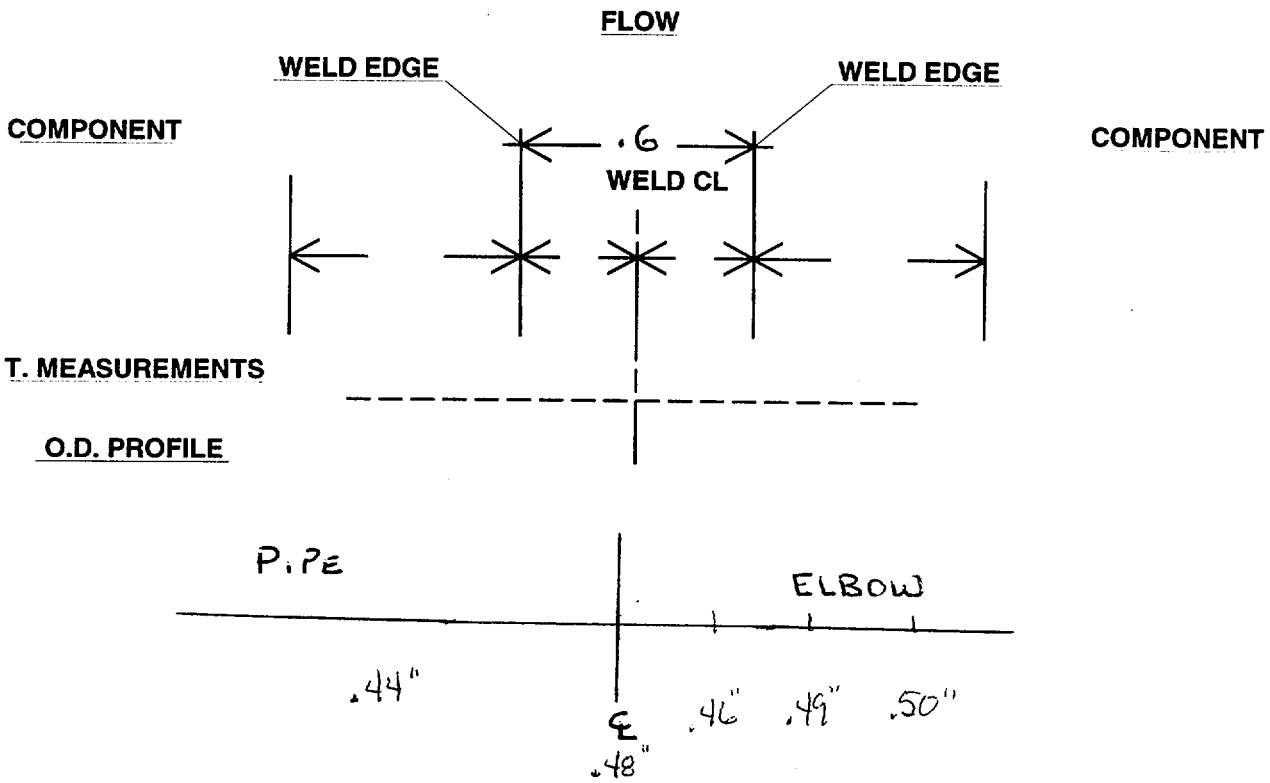

T. MEASUREMENT EACH AS SHOWN **IN.**

REMARKS: N/A

NDE LII/III Review	Level	Date	Non-Technical Review	Date
J. Eric Clyde	III	3-13-01	Lynda Duke	3-13-01

Revision 1

EXAMINATION SUMMARY
FOR UNIT 2
INTERVAL 2 PERIOD 3 OUTAGE 3

DRAWING APR2-4508
RHR TRAIN B

ITEM NO	VOLUMERIC			SURFACE			VISUAL			REMARKS
	NI	NRI	RI	NI	NRI	RI	NI	NRI	RI	
1	X									See Tab E
2	X									See Tab E
3			X							See Tab E IER-001A

AUXILIARY
EL. 83'-0"

RHR TRAIN B

APR2-4508

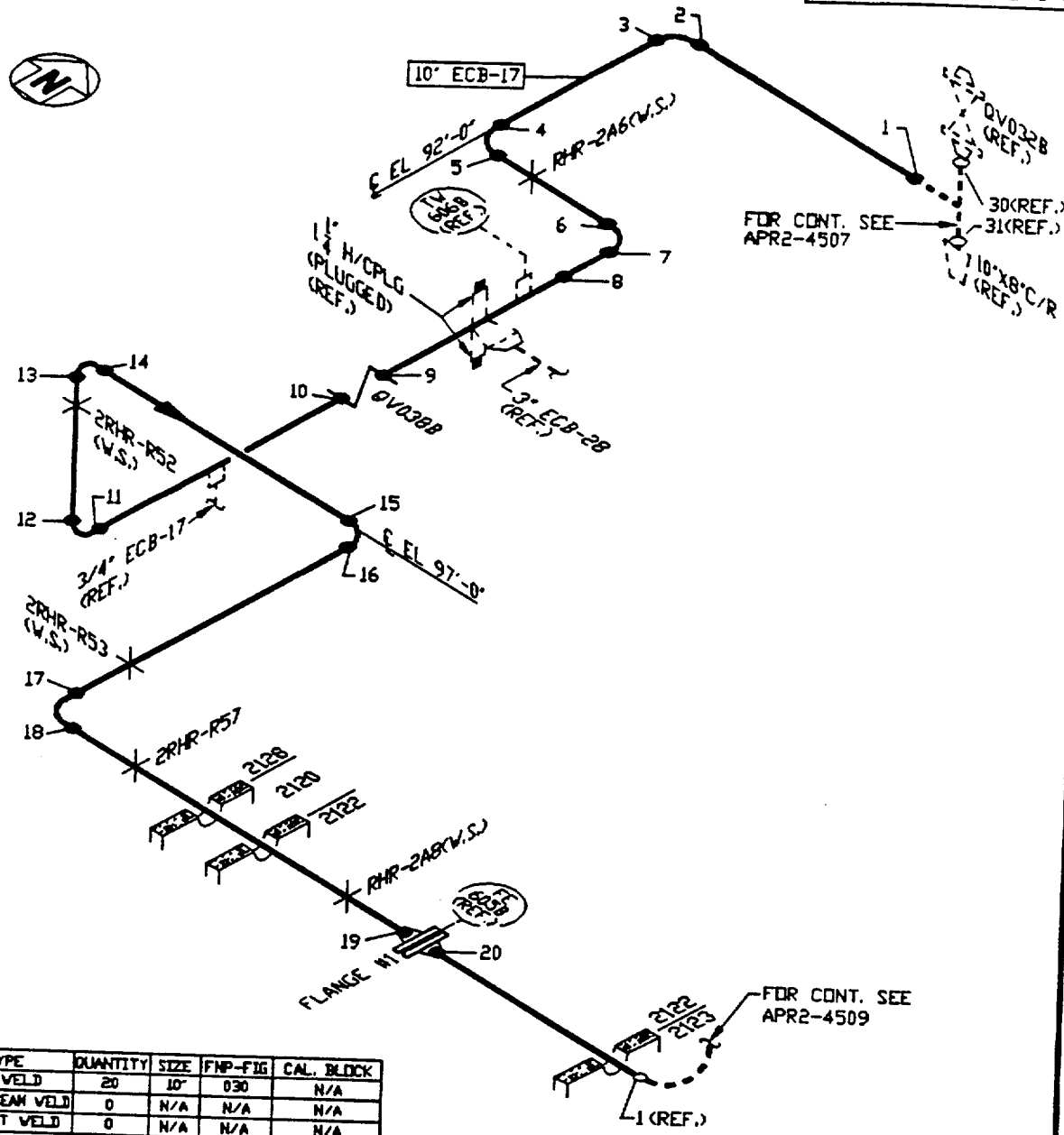

TYPE	QUANTITY	SIZE	FNP-FIG	CAL. BLOCK
BUTT WELD	20	10"	030	N/A
LONG SEAM WELD	0	N/A	N/A	N/A
SOCKET WELD	0	N/A	N/A	N/A
BRANCH CONN.	0	N/A	N/A	N/A
WELDED SUPP.	4	N/A	028	N/A
COMP. SUPPORT	5	N/A	037	N/A

LINE NUMBER: Q-2-E11-ECB-17

LINE SIZE: 10" ECB-17

BOUNDARY DIAGRAM D-356358 SH. 1

REFERENCE ISO'S D-515278 SH. 1

REV.	DATE	BY	CHK'D	DESCRIPTION
1	7-29-97	HSK	TLS	REVISED PER REA 96-1295 REV.0
0	11-22-91	SDH	JAR	ISSUED PER PCN S-91-2-7763.

NOT FOR REV.			
JAR/CAB	HGM	RKC/AH	DML
APPR.1	APPR.2	APPR.3	APPR.4

CAD 4508 HSK-1
AUTOCAD

Southern Company Services, Inc. for

ALABAMA POWER COMPANY
JOSEPH M. FARLEY NUCLEAR PLANT
UNIT 2

E11-RESIDUAL HEAT REMOVAL

SCS DRAWING NUMBER	SHEET	REV.
A-356454	107	1

SHARED

Farley Nuclear Plant
Ultrasonic Calibration and Examination Record

FNP-0-NDE-100.44
Southern Nuclear Operating Company

Unit	Sketch/Component Number	Date	Sheet No.
2	APR2-4508-1	03/09/01	S01F2U026 Page 1 of 1

Procedure/Rev./TCN	Couplant/Batch No.	ThermometerSN/Cal Due Date	Linearity Sheet No.
FNP-0-NDE-100.44 / 0 / N/A	Ultragel II / 00125	213305 01/25/02	S01F2L004

Instrument

Make/Model: Staveley / SONIC 136
Serial No.: 136-905K

	Ax dB	Circ dB
Reference	32.4	37.6
Scanning	47	51.6

Pulser: 222NS
Frequency: 2.25 Rep Rate: 4khz
Mode: P/E Filter: 2
Damping: 500OH Reject: OFF

Search Unit

Transducer Mfg.: KBA
Serial No.: 031296
Model No.: MSWQC
Size / No.: .375 Shape / Round
Frequency/Mode: 2.25 / Shear
"A" Dimension: .25
Nom Angle: 45 Meas Angle: 44
Cable Type /No. Conn.: RG174 / 0
Cable Length: 6'

Calibration Block

Cal. Blk. No.: ALA-13
Thickness: 0.365
Cal. Temp: 80 °F
Cal. In: 8:09:00 AM
Cal. Chk.: 1015
Cal. Out: 1:18:00 PM
Ref. Blk. No.: 801101
Reflector/dB: HOLE / 41.2
Amp/Sweep: 80 % 2.2

Axial Scans Calibration

Cal. Refl.	Signal Amp.	Sweep Div.	Wmax
ID	80	2.5	.35
OD	48	5.0	.58
ID	35	7.4	.85

Circ Scans Calibration

Cal. Refl.	Signal Amp.	Sweep Div.	Wmax
ID	75	2.8	.45
OD	80	5.4	.88
ID	30	8.4	1.29

Calibration Remarks:
LAMINATION SCAN PERFORMED

Comp Temp. 80 °F Configuration - TEE TO PIPE Wo Loc. C/L Lo Loc. TDC

Scan Dir.	Results NI	NRI	RI	Ind No.	% DAC	Length L1	Lmax	L2	Ref. Measurements Wmax	Smax	Thickness 1"<--	C/L	-->1"	Notes:
8	●	○	○											
7	●	○	○											
5	●	○	○											
2	●	○	○											

Examination/Limitation Remarks: EXAMINED 6" BASE MATERIAL AS REQUESTED BY SNC

Total Length of Weld: 34" Crown Width: .6"
Total Length of Weld Examined: 5 (L) 34 2 (L) 34 7 and 8 (W) 34
Extent of Perpendicular Scans (W): 5- From NL to NL 2- From NL to NL
Extent of Parallel Scans (L): From (5) NL to (2) NL

Primary Examiner	Level	Initials	Assistant Examiner	Level	Initials	Non-Technical Review	Date
Tommy Jackson	II	[illegible]	John W. Bell	II	JWB	J. Eric Clyatt	3/3/01

SNC NDE Level II/III Review: Danny R. Lotts Date: Lv. III 3-12-01
Percentage of Code Coverage: 100
ANII Review: N/A Date:

Revision 0

Farley Nuclear Plant
Ultrasonic Weld Profile Report

SHARED

FNP-0-NDE-100.35
Southern Nuclear Operating Company

Plant/Unit	Weld Number	Sheet Number	Date
Farley / 2	APR2-4508-1	S01F2U038	3/9/01

ISO/Drawing Number	Couplant/Batch Number	Instrument Manufacturer
APR2-4508	Ultragel II / 00125	Staveley

Material Type	Calibration Standard/Serial Number	Model Number	Serial Number
SS Step Wedge	800887	SONIC 136	136-905K

Examiner		SNT Level	Search Unit Manufacturer	Type	Size
Tommy Jackson	TJ	II	KBA	ADP	.25

Examiner		SNT Level	Serial Number	Frequency
John W. Bell	JWB	II	009KJ7	5.0 MHz

Weld Examination Record No.	Indication No.	Component Configuration/Flow
NA	NA	see below

Location		Component Temp °F	Thermometer S/N
LMAX 0° - 90°	WMAX weld E	80	PTC 213305

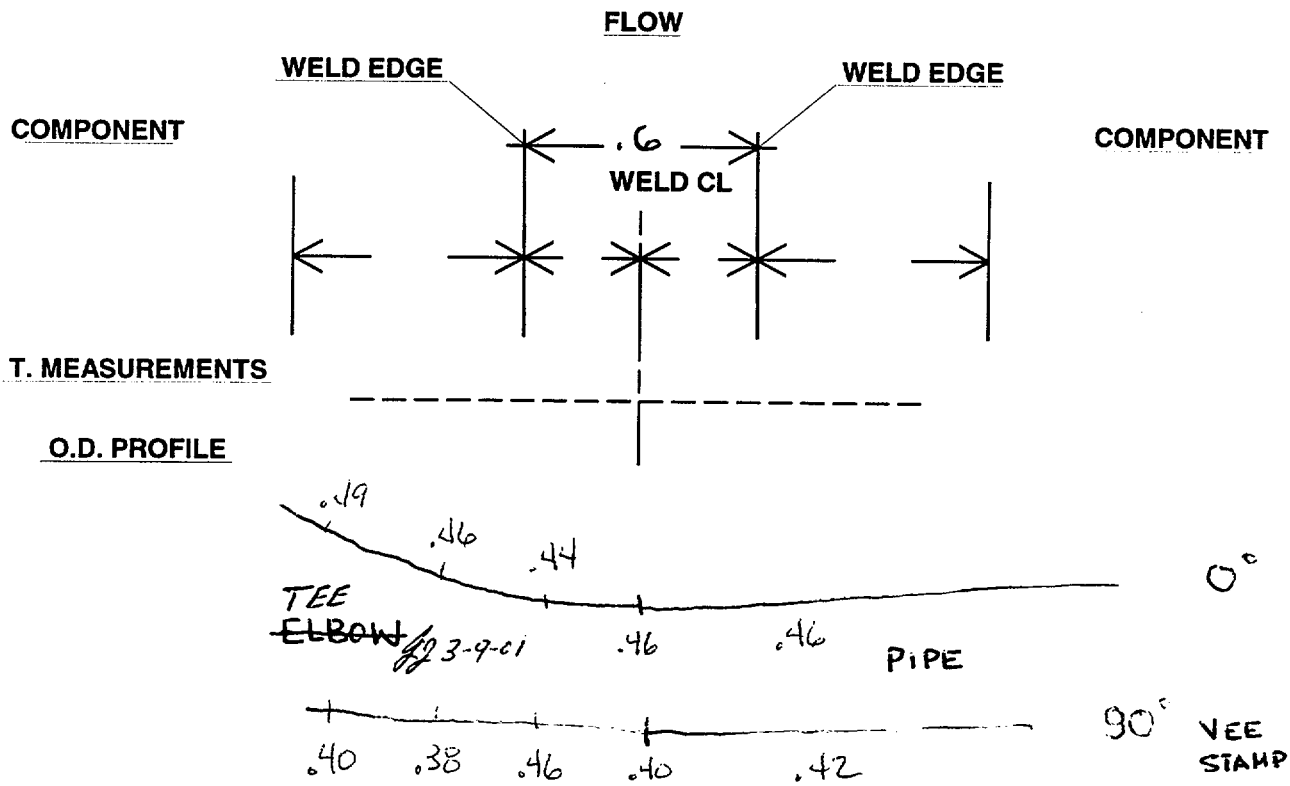

T. MEASUREMENT EACH As shown **IN.**

REMARKS: N/A

NDE Lvl/III Review	Level	Date	Non-Technical Review	Date
J. Eric Dyrock	III	3-13-01	Lynda Duke	3-13-01

Revision 1

SHARED

Farley Nuclear Plant
Ultrasonic Calibration and Examination Record

FNP-0-NDE-100.44
Southern Nuclear Operating Company

Unit	Sketch/Component Number	Date	Sheet No.
2	APR2-4508-2	03/09/01	S01F2U028 Page 1 of 1

Procedure/Rev./TCN	Couplant/Batch No.	ThermometerSN/Cal Due Date	Linearity Sheet No.
FNP-0-NDE-100.44 / 0 / N/A	Ultragel II / 00125	213305 01/25/02	S01F2L004

Instrument

Make/Model: Staveley / SONIC 136
Serial No.: 136-905K

	Ax dB	Circ dB
Reference	32.4	37.6
Scanning	47	51.6
Pulser	222ns	

Frequency 2.25 Rep Rate 4khz
Mode P/E Filter 2
Damping 500oh Reject off

Search Unit

Transducer Mfg. KBA
Serial No. 031296
Model No. MSWQC
Size / No. .375 Shape / Round
Frequency/Mode 2.25 / Shear
"A" Dimension .25
Nom Angle 45 Meas Angle 44
Cable Type /No. Conn. RG174 / 0
Cable Length 6'

Calibration Block

Cal. Blk. No. ALA-13
Thickness 0.365
Cal. Temp 80 °F
Cal. In 8:09:00 AM
Cal. Chk. 1015
Cal. Out 1:18:00 PM
Ref. Blk. No. 801101
Reflector/dB HOLE / 41.2
Amp/Sweep 80 % 2.2

Axial Scans Calibration

Cal. Refl.	Signal Amp.	Sweep Div.	Wmax
ID	80	2.5	.35
OD	48	5.0	.58
ID	35	7.4	.85

Circ Scans Calibration

Cal. Refl.	Signal Amp.	Sweep Div.	Wmax
ID	75	2.8	.45
OD	80	5.4	.88
ID	30	8.4	1.29

Calibration Remarks:
LAMINATION SCAN PERFORMED

Comp Temp. 80 °F Configuration - PIPE TO ELBOW Wo Loc. Weld C/L Lo Loc. TDC

Scan Dir.	Results NI	NRI	RI	Ind No.	% DAC	Length L1	Lmax	L2	Ref. Measurements Wmax	Smax	Thickness 1"<--	C/L	-->1"	Notes:
8	●	○	○											
7	●	○	○											
5	●	○	○											
2	●	○	○											

Examination/Limitation Remarks: EXAMINED 6" BASE MATERIAL AS REQUESTED BY SNC

Total Length of Weld 34" Crown Width .6"
Total Length of Weld Examined: 5 (L) 34 2 (L) 34 7 and 8 (W) 34
Extent of Perpendicular Scans (W): 5- From NL to NL 2- From NL to NL
Extent of Parallel Scans (L): From (5) NL to (2) NL

Primary Examiner	Level	Initials	Assistant Examiner	Level	Initials	Non-Technical Review	Date
Tommy Jackson	II	[illegible]	John W. Bell	II	JWB	[illegible]	3/13/01

SNC NDE Level II/III Review [illegible] LV III Date 3-12-01 Percentage of Code Coverage 100 ANII Review N/A Date

Revision 0

Farley Nuclear Plant
Ultrasonic Weld Profile Report

SHARED

FNP-0-NDE-100.35
Southern Nuclear Operating Company

Plant/Unit Farley / 2	**Weld Number** APR2-4508-2	**Sheet Number** S01F2U039	**Date** 3/9/01
ISO/Drawing Number APR2-4508	**Couplant/Batch Number** Ultragel II / 00125	**Instrument Manufacturer** Staveley	
Material Type SS Step Wedge	**Calibration Standard/Serial Number** 800887	**Model Number** SONIC 136	**Serial Number** 136-905K
Examiner Tommy Jackson	**SNT Level** II	**Search Unit Manufacturer** KBA	**Type** ADP **Size** .25
Examiner John W. Bell JWB	**SNT Level** II	**Serial Number** 009KJ7	**Frequency** 5.0 **MHz**
Weld Examination Record No. NA	**Indication No.** NA	**Component Configuration/Flow** see below	
Location **LMAX** TDC **WMAX** WELD ℄		**Component Temp °F** 80	**Thermometer S/N** PTC 213305

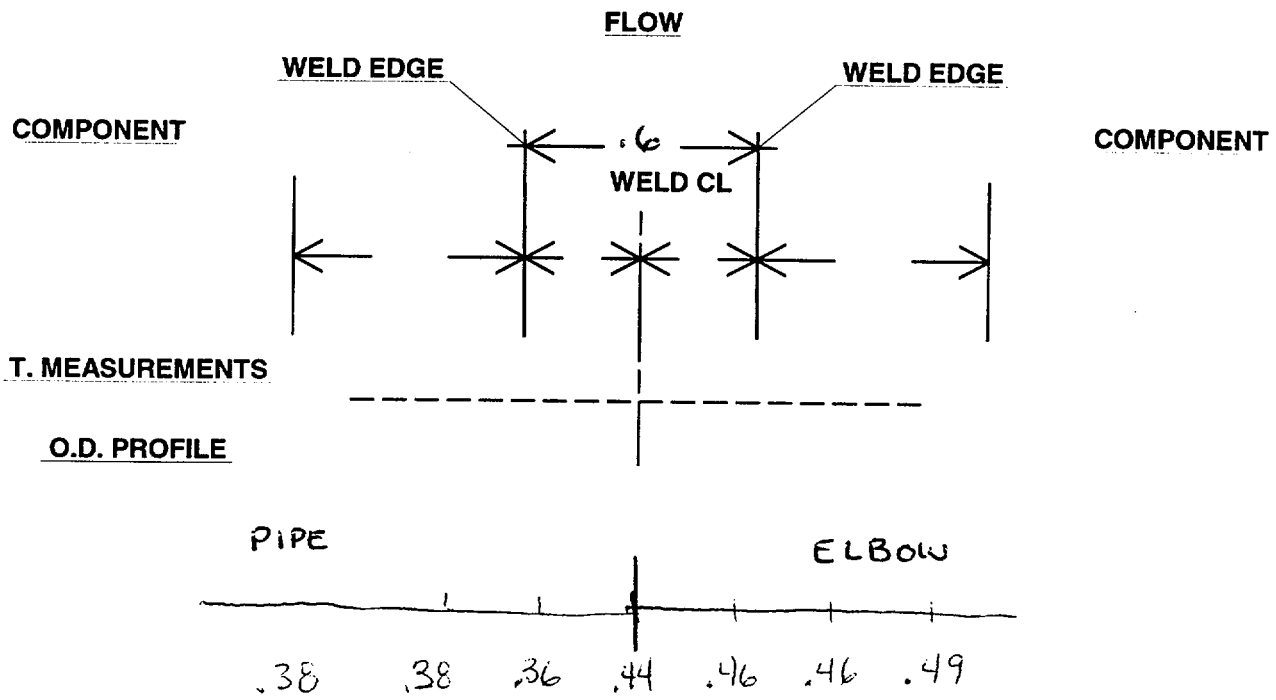

T. MEASUREMENT EACH AS SHOWN **IN.**

REMARKS: N/A

NDE Lll/lll Review	Level	Date	Non-Technical Review	Date
J. Eric Alycock	III	3-13-01	Lynda Duke	3-13-01

Revision 1

SHARED

Farley Nuclear Plant
Ultrasonic Calibration and Examination Record

FNP-0-NDE-100.44
Southern Nuclear Operating Company

Unit	Sketch/Component Number	Date	Sheet No.
2	APR2-4508-3	03/09/01	S01F2U030 Page 1 of 2

Procedure/Rev./TCN	Couplant/Batch No.	ThermometerSN/Cal Due Date	Linearity Sheet No.
FNP-0-NDE-100.44 / 0 / N/A	Ultragel II / 00125	213305 01/25/02	S01F2L004

Instrument

Make/Model: Staveley / SONIC 136
Serial No.: 136-905K

	Ax dB	Circ dB
Reference	32.4	37.6
Scanning	47	51.6
Pulser	222ns	

Frequency 2.25 Rep Rate 4khz
Mode P/E Filter 2
Damping 500oh Reject off

Search Unit

Transducer Mfg. KBA
Serial No. 031296
Model No. MSWQC
Size / No. .375 Shape / Round
Frequency/Mode 2.25 / Shear
"A" Dimension .25
Nom Angle 45 Meas Angle 44
Cable Type /No. Conn. RG174 / 0
Cable Length 6'

Calibration Block

Cal. Blk. No. ALA-13
Thickness 0.365
Cal. Temp 80 °F
Cal. In 8:09:00 AM
Cal. Chk. 1015
Cal. Out 1:18:00 PM
Ref. Blk. No. 801101
Reflector/dB HOLE / 41.2
Amp/Sweep 80 % 2.2

Axial Scans Calibration

Cal. Refl.	Signal Amp.	Sweep Div.	Wmax
ID	80	2.5	.35
OD	48	5.0	.58
ID	35	7.4	.85

Circ Scans Calibration

Cal. Refl.	Signal Amp.	Sweep Div.	Wmax
ID	75	2.8	.45
OD	80	5.4	.88
ID	30	8.4	1.29

Calibration Remarks:
LAMINATION SCAN PERFORMED

Comp Temp. 80 °F Configuration - ELBOW TO PIPE Wo Loc. Weld C/L Lo Loc. TDC

Scan Dir.	Results NI	NRI	RI	Ind No.	% DAC	Length L1	Lmax	L2	Ref. Measurements Wmax	Smax	Thickness 1"<--	C/L	-->1"	Notes:
8	◉	○	○											
7	◉	○	○											
2	◉	○	○											
5	○	○	◉	1	100	NA	10 3/4	NA	.55	.64	.52	.42	.42	Intermitted Geo 360°

Examination/Limitation Remarks: EXAMINED 6" BASE MATERIAL AS REQUESTED BY SNC

Total Length of Weld 34" Crown Width .6
Total Length of Weld Examined 5 (L) 34 2 (L) 34 7 and 8 (W) 34
Extent of Perpendicular Scans (W) 5- From NL to NL 2- From NL to NL
Extent of Parallel Scans (L) From (5) NL to (2) NL

Primary Examiner	Level	Initials	Assistant Examiner	Level	Initials	Non-Technical Review	Date
Tommy Jackson	II	[illegible]	John W. Bell	II	JWB	[illegible]	3-13-01

SNC NDE Level II/III Review [illegible] Date LVIII 3-12-01 Percentage of Code Coverage 100 ANII Review N/A Date

Revision 0

APR2-4508-3

Sheet # 50F2U030
2 of 2

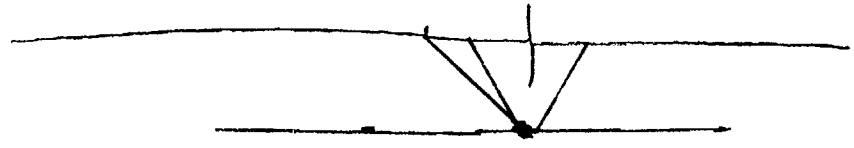

Elbow to Pipe

ID geometry Root

Gary L. Lotta Lv III 3-12-01

Farley Nuclear Plant
Ultrasonic Weld Profile Report

SHARED

FNP-0-NDE-100.35
Southern Nuclear Operating Company

Plant/Unit	Weld Number	Sheet Number	Date
Farley / 2	APR2-4508-3	S01F2U040	3/9/01

ISO/Drawing Number	Couplant/Batch Number	Instrument Manufacturer
APR2-4508	Ultragel II / 00125	Staveley

Material Type	Calibration Standard/Serial Number	Model Number	Serial Number
SS Step Wedge	800887	SONIC 136	136-905K

Examiner	SNT Level	Search Unit Manufacturer	Type	Size
Tommy Jackson	II	KBA	ADP	.25

Examiner	SNT Level	Serial Number	Frequency
John W. Bell	II	009KJ7	5.0 MHz

Weld Examination Record No.	Indication No.	Component Configuration/Flow
NA	NA	see below

Location	Component Temp °F	Thermometer S/N
LMAX 0°, 10 3/4" WMAX weld ℄	80	PTC 213305

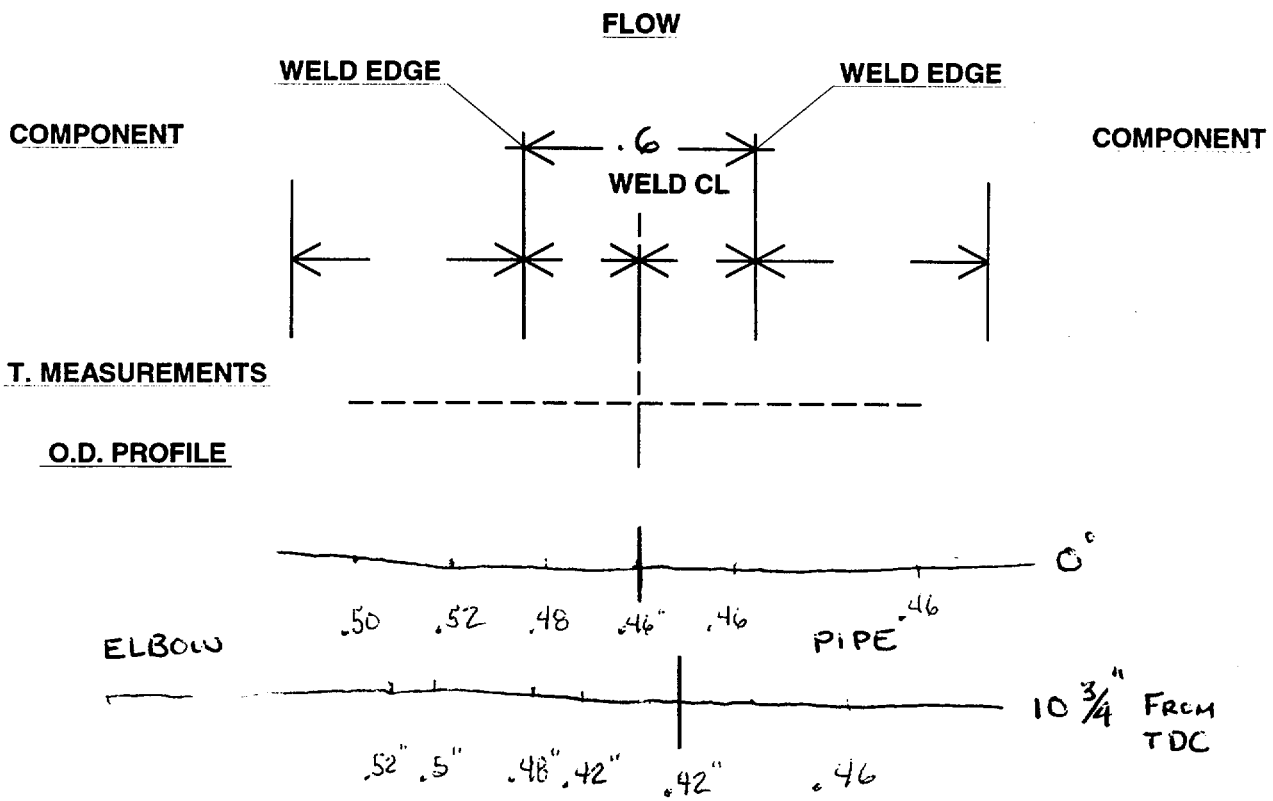

T. MEASUREMENT EACH * **IN.**

* Actual locations distances as shown above.

REMARKS: NA

NDE LII/III Review	Level	Date	Non-Technical Review	Date
J. Eric Aycock	III	3-13-01	Lynda Duke	3-13-01

Revision 1

J. M. FARLEY NUCLEAR PLANT
UNIT 2
INTERVAL 2 PERIOD 3 OUTAGE 3

RHR PIPING EXAMINATIONS

During the RF 14 outage, volumetric examinations were performed on welds APR2-4504-1, 2 and 3 and APR2-4508-1, 2 and 3. These examinations were in response to problems identified by EdF in their RHR piping. No indications similar to the EdF cracking issue were identified by the examinations. An indication identified in weld APR2-4508-3 was evaluated as geometry and found acceptable. The examination data sheets are located behind Tab 2.3.

REACTOR VESSSEL NOZZLE (SANDBOX) AREA EXAMINATIONS

The area around each of the reactor vessel nozzles were examined to identify any accumulation of boron which might indicate a crack in the RCS piping. The examinations were in response to the nozzle cracking event at the V. C. Summer plant. There were no indications of leakage identified. Examinations were also performed with a camera to the extent possible of the reactor vessel nozzle supports and concrete surrounding the supports. No problems were identified during the exams.

CONTROL ROD DRIVE PENETRATIONS VISUAL EXAMINATIONS

In response to industry concerns of cracking in the area where the CRDM sleeves penetrate the reactor vessel head, a visual examination for a buildup of boron on the RV head was performed. Visual examinations both above and under the RV head insulation were performed. No evidence of leakage or boric acid residue was observed.

STEAM GENERATOR REPLACEMENT PRE-SERVICE EXAMINATIONS

The three Steam Generators for FNP Unit 2 were replaced during the RF 14 outage. Pre-service examinations for the Steam Generator welds and the Eddy-Current examinations for the tubes was performed at the production facility in Spain. This examination data is filed in the FNP Document Control in the Purchase Order documentation package. The FNP R-type (record type) for the package is C1.01. Additionally it is cross-referenced to CD_ROM disks containing the UT mechanized data (R-type R01.600) and the Eddy-Current data (R-type R01.570).

Pre-service exams performed on site consisted of ultrasonic and liquid penetrant examinations on six (6) RCS to steam generator welds. Ultrasonic and magnetic particle examinations were performed on three main steam nozzle to pup-piece welds and three feedwater piping to reducer welds. The pre-service examination for the replacement steam generators is located behind Tab E.

CLASS 1 SYSTEM LEAKAGE TEST

The VT-2 data sheets for the Class 1 system leakage test performed at the end of the refueling outage in accordance with IWB-5210(a)(1) are included behind Tab 1.7. As this was the last outage of the 10-year interval sections of piping not normally pressurized were pressurized, by jumpers connected between vent and drain valves, to bypass check valves and normally closed valves. This ensured the piping was pressurized to normal operating pressure for the VT-2 examinations.

REACTOR VESSEL NOZZLE
(SANDBOX)
AREA EXAMINATIONS

Farley Nuc[illegible] [illegible]lant
Support Examination Record VT-3

SHARED

FNP-0-N[illegible]-100.23
Southern Nuclear Operating Company

Plant / Unit	Line Number/Examination Area/Weld No.	Drawing Number	Sheet No.
FARLEY 2 /	RCS SANDBOX LOOP A HL/CL, LOOP B HL/CL, LOOP C HL/CL		

Photos	Sketch	Resolution	Technique	WO / WA
[X] Yes [ ] B/W	[ ] Yes	[X] 1/32" Division (Scale)	[ ] Direct [X] Video	Procedure No. FNP-0-NDE-100.23
[ ] No [ ] Color	[X] No	[ ] 1/32" Line (Gray Card)	[X] Remote	Version No. 1.0

Equipment	Lighting	Tools			Examiner/Initial Sig.	Level
[ ] Mirror	[ ] Ambient	[ ] Scale	[ ] Depth Gauge	[ ] Level	[signature]	II
[ ] Magnifier	[X] Flashlight	[ ] Micrometer	[ ] Comparator	[X] Sony Digital Camcorder	Examiner/Initial Sig. [signature]	Level III
[X] CCTV	[ ] Droplight	[ ] Caliper	[ ] Weld Gauge	[ ]	Date (Month-Day-Year) 2-26-01	

[ ] **SNUBBERS VT-3**

	SAT	UN-SAT	N/A
Loose Bolt or Pin Connections	[ ]	[ ]	[ ]
Shaft Seal	[ ]	[ ]	[ ]
Fluid Leakage	[ ]	[ ]	[ ]
Fluid Tubing Condition	[ ]	[ ]	[ ]
Shaft Cleanliness	[ ]	[ ]	[ ]
Spherical Bearings	[ ]	[ ]	[ ]
Cotter-Clevis Pins Intact	[ ]	[ ]	[ ]
Other **	[ ]	[ ]	[ ]

* Provide details on unsat areas by use of supplemental data sheet.
** Provide details on other areas examined

[X] **COMP. INTERNALS AND MAT'L SURFACE VT-3**

	SAT	UN-SAT	N/A
Pitting	[ ]	[ ]	[X]
Corrosion	[ ]	[ ]	[X]
Erosion	[ ]	[ ]	[X]
Foreign Material	[ ]	[ ]	[X]
Gouged Parts	[X]	[ ]	[ ]
Wear	[ ]	[ ]	[X]
Evidence of Leakage Note 1,	[X]	[ ]	[ ]
Other Cracks **	[ ]	[ ]	[X]

[ ] **HANGERS and SUPPORT VT-3**

	SAT	UN-SAT	N/A
Setting	[ ]	[ ]	[ ]
Hot [ ] Cold [ ]	[ ]	[ ]	[ ]
Misalignment	[ ]	[ ]	[ ]
Damaged Members	[ ]	[ ]	[ ]
Gouges	[ ]	[ ]	[ ]
Arc Strikes	[ ]	[ ]	[ ]
Grind Marks	[ ]	[ ]	[ ]
Freedom of Movement	[ ]	[ ]	[ ]
Other **	[ ]	[ ]	[ ]

Comments
Note 1 - Examination on RC Hot & Cold Legs of Insulation Surface and surrounding structure. Boron residue can be seen on insulation. Boron residue can be seen on sand box surface where it dripped down the wall and onto the insulation. Boron residue appears to have originated from above (probably cover leakage from pool cavity) and not from the piping. No large boron buildup was detected, only thin film. (Video CD submitted with report.)

Reviewed By	ANII Review	Date
	Level	Date

Version 4.0

Farley Nuc[illegible] [illegible]lant
Visual Exan[illegible]ion Record VT-1

SHARED

FNP-0-N[illegible] [illegible]0.21
Southern Nuclear Operating Company

Plant / Unit	Line Number/Examination Area/Weld No.	Drawing Number	Sheet Number
Farley / 2	Sand box Loop A HL/CL, B HL/CL, C HL/CL		

Photos	Sketch	Resolution	Technique	
Yes B/W No Color	Yes X No	X 1/32" Division (Scale) 1/32" Line (Gray Card)	Direct X Video X Remote	WO / WA Procedure No. FNP-0-NDE-100.21 Revision No. 1

Equipment	Lighting	Tools			
Mirror Magnifier X CCTV	Ambient X Flashlight Droplight	Scale Micrometer Caliper	Depth Gauge Comparator Weld Gauge	Level X Video Camera Sony 8mm-Digital	Examiner/Initial Sig. [signature] Level III Examiner/Initial Sig. Level Date

WELDS AND BASE MATERIAL VT-1	SAT	UN-SAT	N/A
Ground Blend Material			X
Undercut			X
Corrosion Build-up			X
Gouges			X
Evidence of Leakage	X		
Arc Strikes			X
Cracks			X
Other**	X		

* Provide details on unsat areas by use of supplemental data sheet.
* Provide details on other areas examined

BOLTS, STUDS, AND WASHERS VT-1	SAT	UN-SAT	N/A
Loose Members			
Cracks			
Corrosion			
Gouges			
Thread Damage			
Deformation			
Protective Coating			
Evidence of Leakage			
Other **			

Comments Examination of Insulation on RC Hot and Cold legs. Boron Residue can be seen on insulation. Boron Residue can be seen on Sand box surface, where it dripped onto insulation. Boron Residue from outside Sources. No large Boron build-up detected.

Reviewed By	ANII Review	Date
	Level	Date

Name: 2r14sandbox6.jpg
Dimensions: 320 x 240 pixels

Name: 2r14sandbox5.jpg
Dimensions: 320 x 240 pixels

349

Name: 2r14sandbox2.jpg
Dimensions: 320 x 240 pixels

Name: 2r14sandbox3.jpg
Dimensions: 320 x 240 pixels

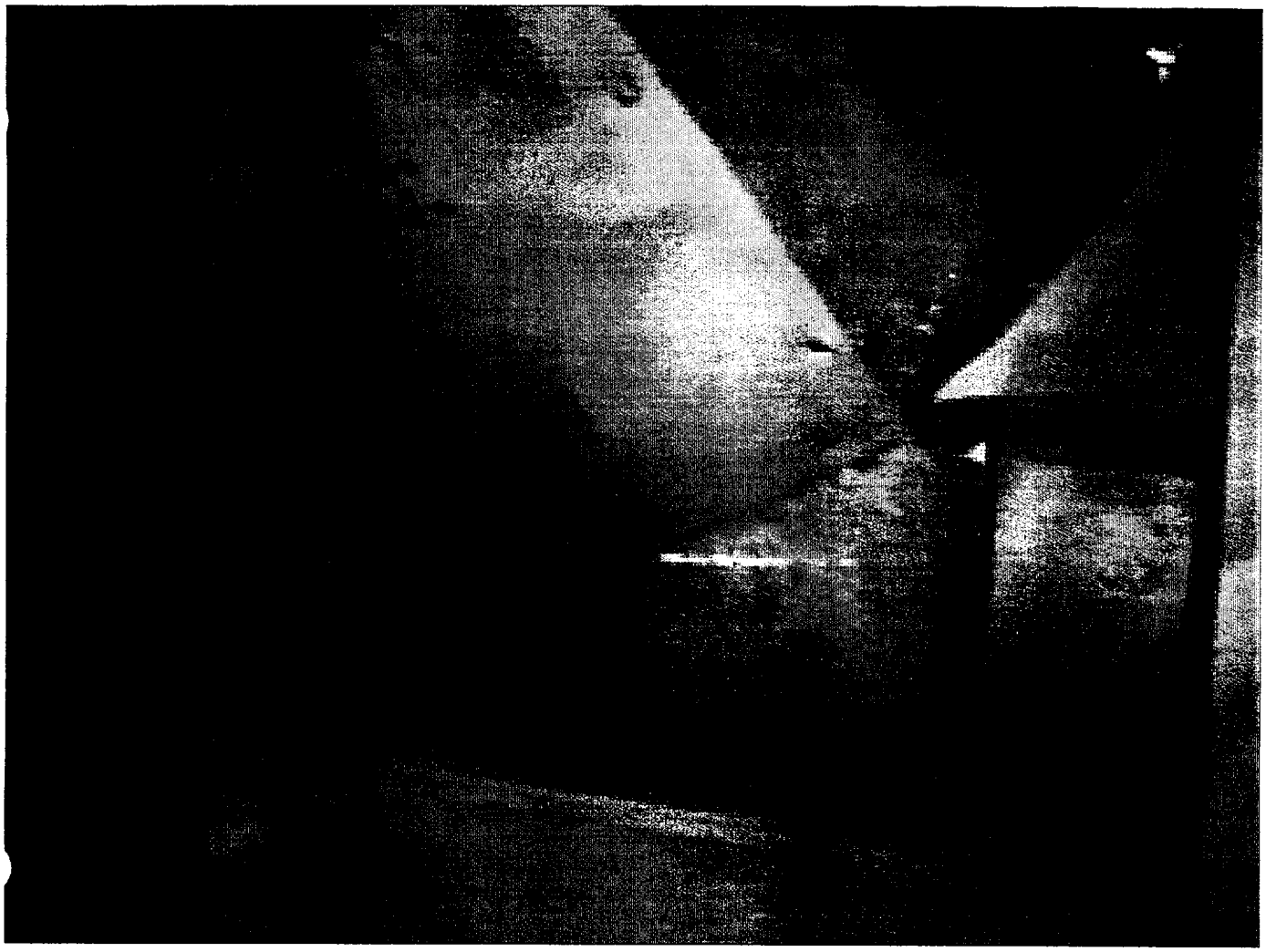

Name: 2r14sandbox7.jpg
Dimensions: 320 x 240 pixels

Name: 2r14sandbox8.jpg
Dimensions: 320 x 240 pixels

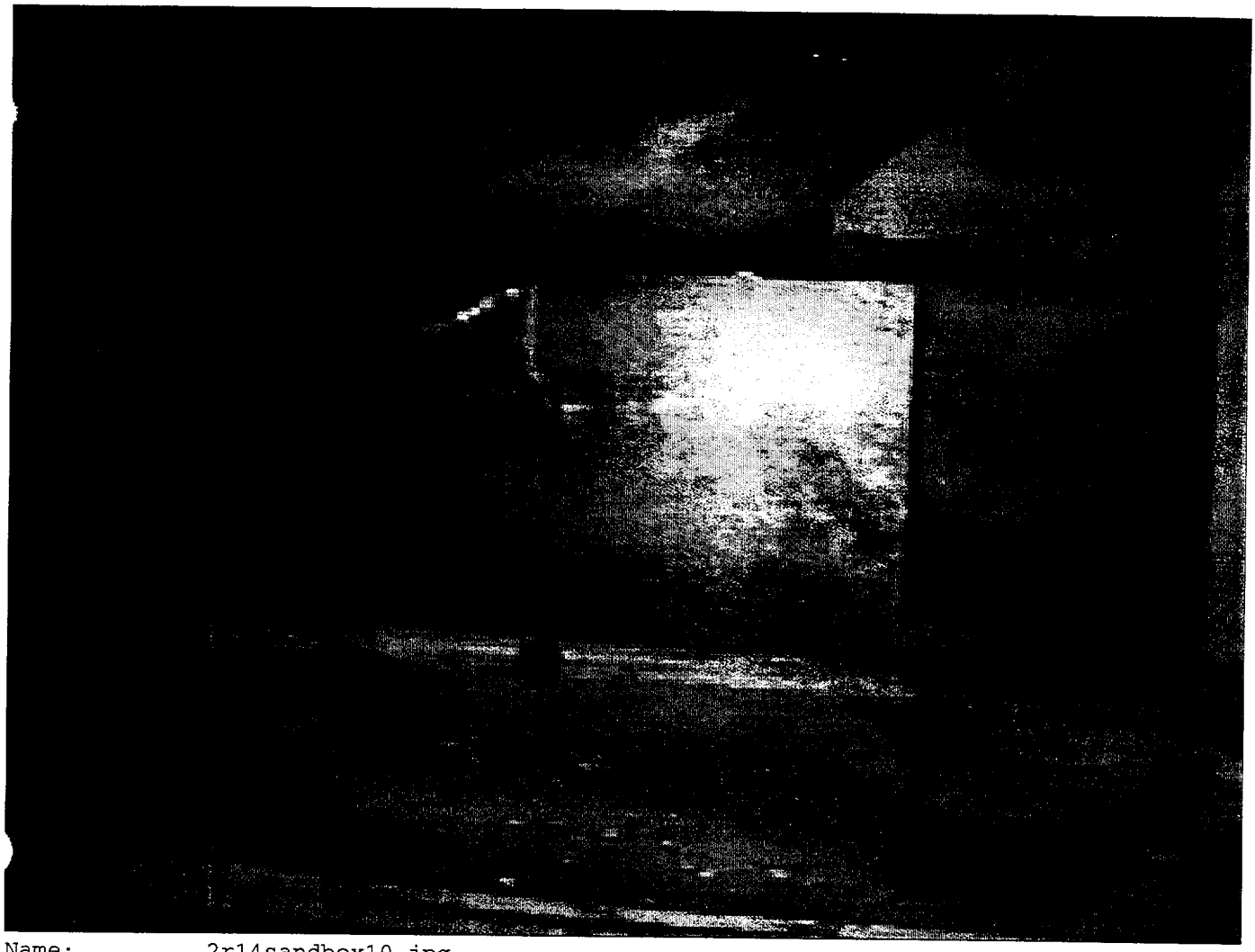

Name: 2r14sandbox10.jpg
Dimensions: 320 x 240 pixels

Name: 2r14sandbox12.jpg
Dimensions: 320 x 240 pixels

CRDM VISUAL EXAMINATION

FIGURE 1

SUPPORT EXAMINATION RECORD VT-3

FARLEY NUCLEAR PLANT

SOUTHERN NUCLEAR OPERATING COMPANY

Plant/Unit	Line Number/Examination Area/Weld No.	Drawing Number	Sheet No.
Farley / 2	**RPV Head CRDM Penetrations**	APR1-1300	

Photos	Sketch	Resolution	Technique
X Yes ___ B&W	___ Yes	X 1/32" Division (Scale)	___ Direct
___ No ___ Color	X No	___ 1/32" Line (Gray Card)	X Video
			X Remote

WO/WA	**1001483**
Procedure No.	**FNP-0-NDE-100.23**
Version No.	**4.0**
Examiner/Initial Sig.	J. Eric Aycock — Level III
Examiner/Initial Sig.	[illegible] — Level III
Date (Month-Day-Year)	3-5-2001

Equipment	Lighting	Tools		
___ Mirror	___ Ambient	X Scale	___ Depth Gauge	___ Level
___ Magnifier	X Flashlight	___ Micrometer	___ Comparator	X Digital Camcorder
X CCTV	___ Droplight	___ Caliper	___ Weld Gauge	

___ **SNUBBERS VT-3**	SAT	UN-SAT	N/A
Loose Bolt or Pin Connections	___	___	___
Shaft Seal	___	___	___
Fluid Leakage	___	___	___
Fluid Tubing Condition	___	___	___
Shaft Cleanliness	___	___	___
Spherical Bearings	___	___	___
Cotter & Clevis Pins Intact	___	___	___
Other**	___	___	___

* Provide details on unsat areas by use of supplemental data sheet.

** Provide details on other areas examined.

X **COMP. INTERNALS & MAT'L SURFACE VT-3**	SAT	UN-SAT	N/A
Pitting	___	___	X
Corrosion	X	___	___
Erosion	___	___	X
Foreign Material	X	___	___
Gouged Parts	X	___	___
Wear	X	___	___
Evidence of Leakage	*X	___	___
Other Cracks**	___	___	X

___ **HANGER & SUPPORTS VT-3**	SAT	UN-SAT	N/A
Setting:	___	___	___
Hot ___ Cold ___	___	___	___
Misalignment	___	___	___
Damaged Members	___	___	___
Gouges	___	___	___
Arc Strikes	___	___	___
Grind Marks	___	___	___
Freedom of Movement	___	___	___
Other**	___	___	___

Comments *** - No evidence of boron buildup coming from beneath insulation. One CRDM housing had light streaks of white residue indicative of leakage from the #51 Conoseal Bolting.** See attached sketch, pictures, and CD video. JEA 3-5-01

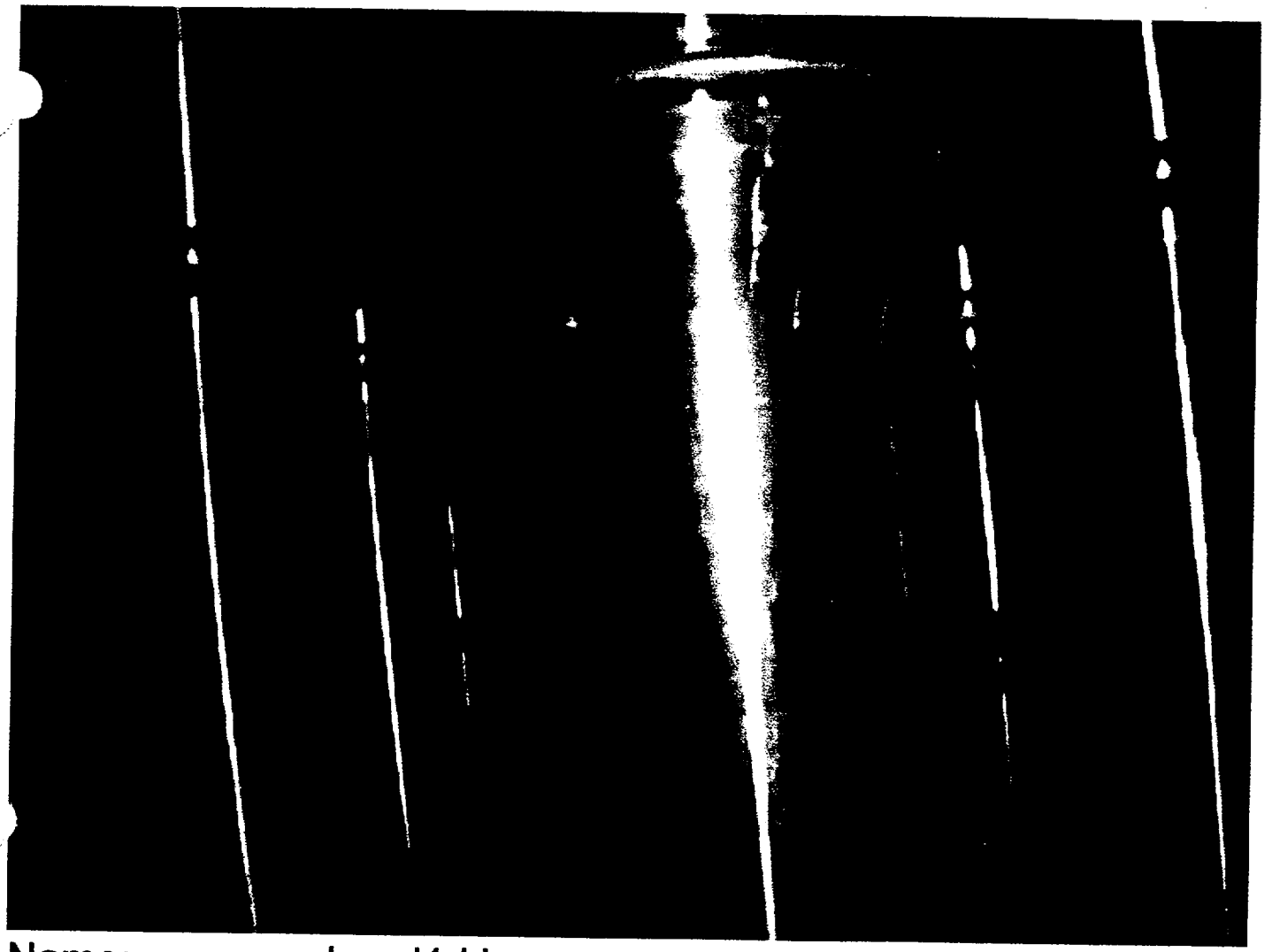

Name: rpvhead1d.jpg
Date: 03/05/01 4:38:25 PM
Dimensions: 800 x 600 pixels

white residue indicative of leakage from the #51 Conoseal bolting.

3-5-2001

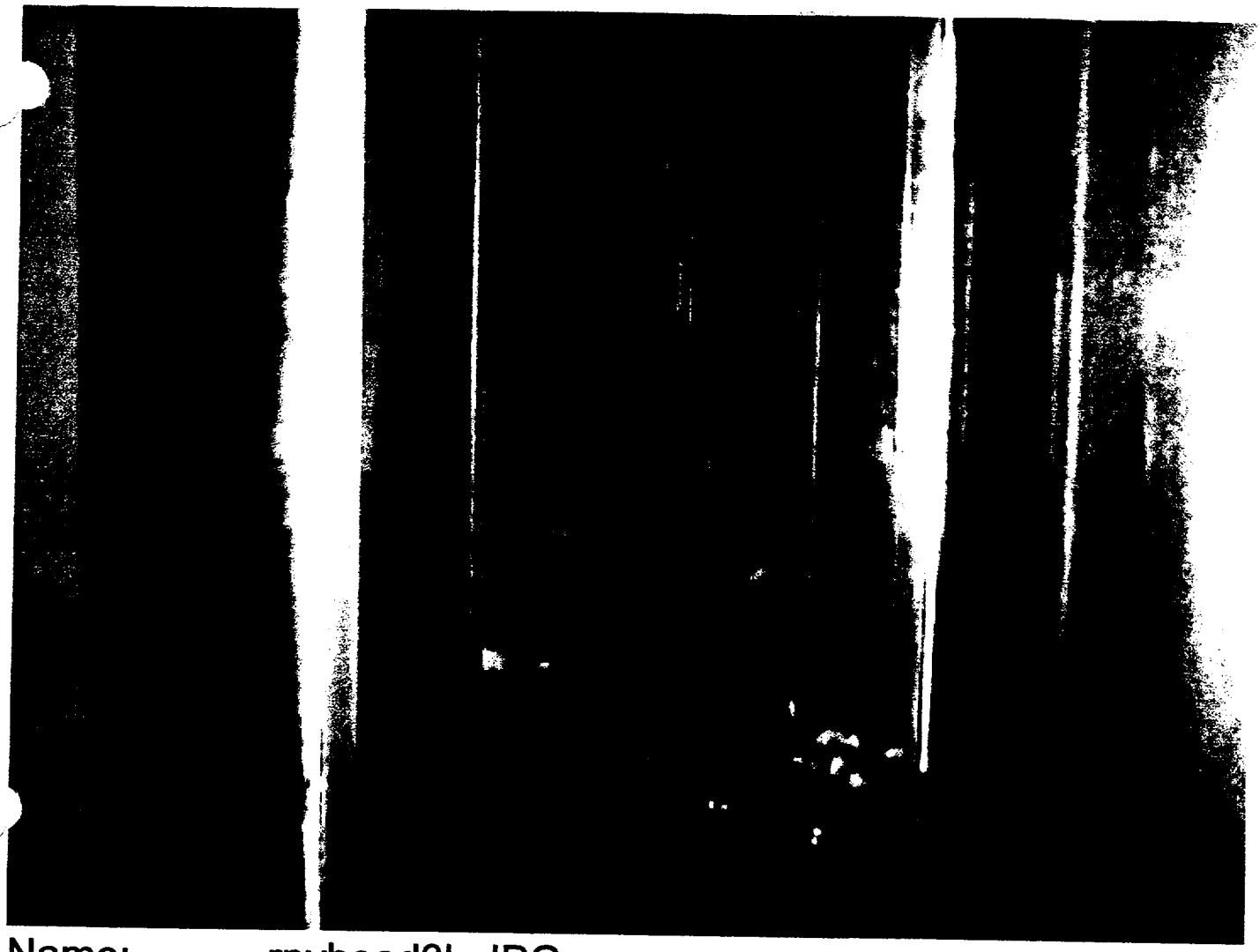

Name: rpvhead3b.JPG
Date: 03/05/01 2:54:08 PM
Dimensions: 640 x 480 pixels

3 of 7

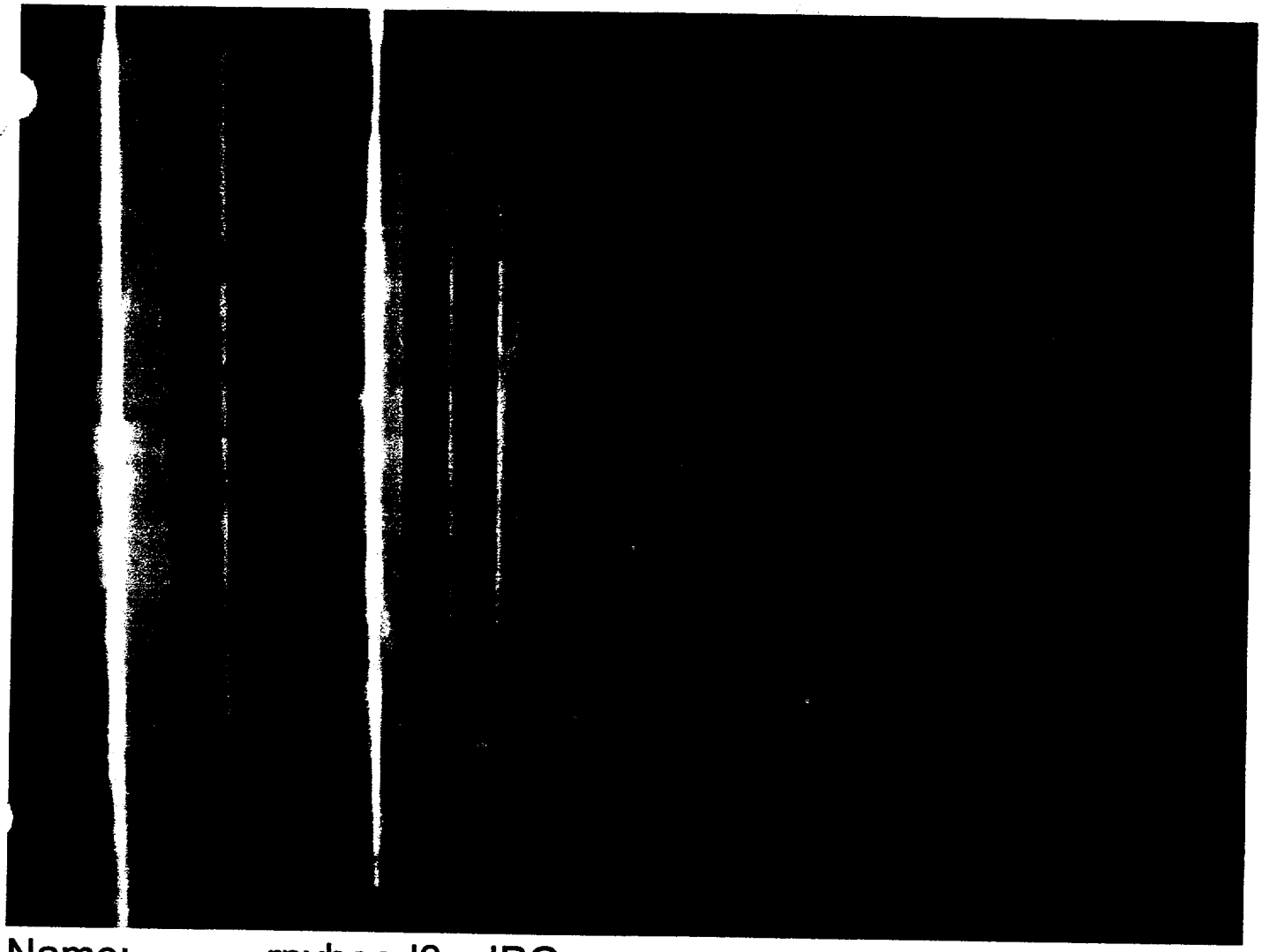

Name: rpvhead3a.JPG
Date: 03/05/01 2:42:08 PM
Dimensions: 640 x 480 pixels

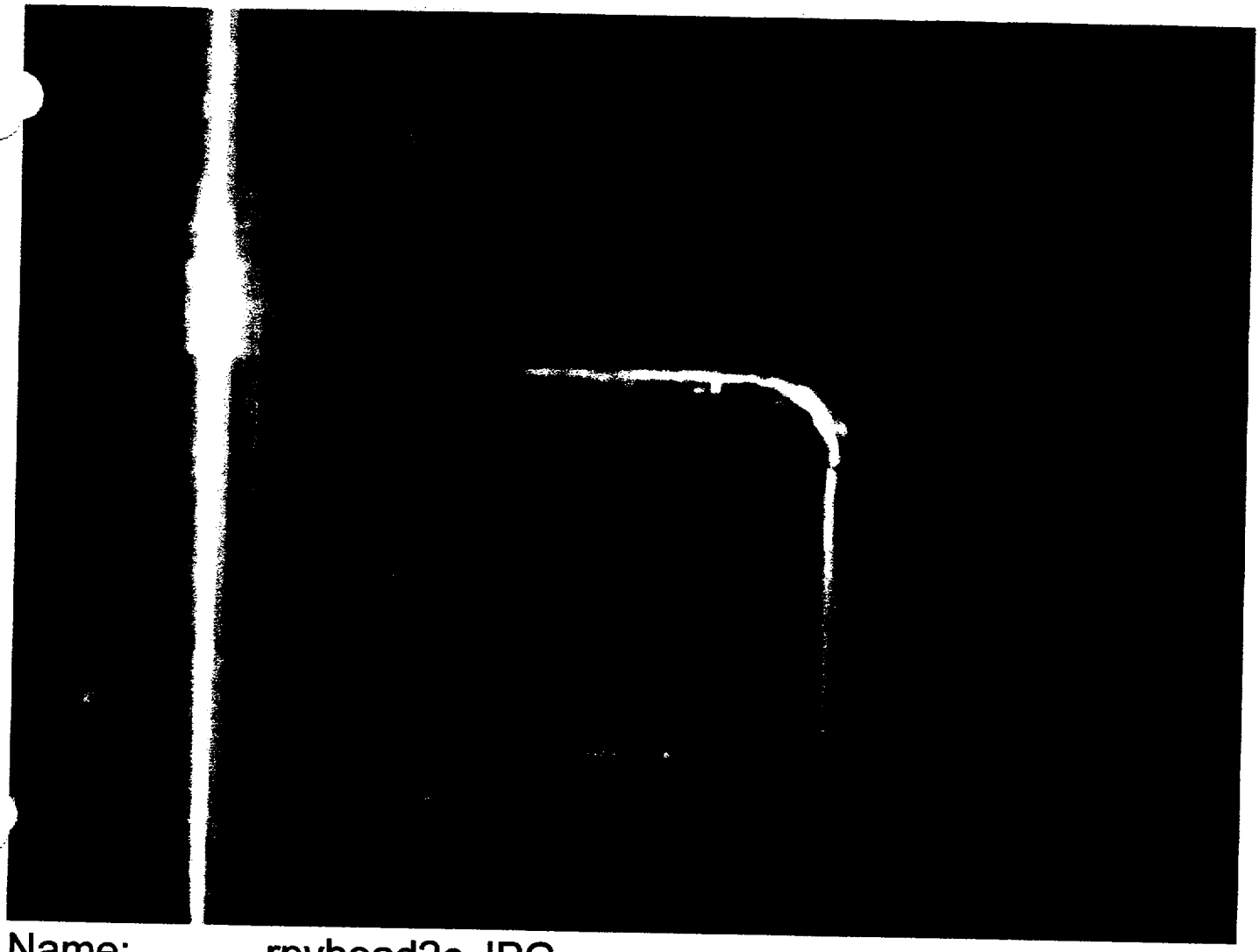

Name: rpvhead2c.JPG
Date: 03/05/01 2:39:20 PM
Dimensions: 640 x 480 pixels

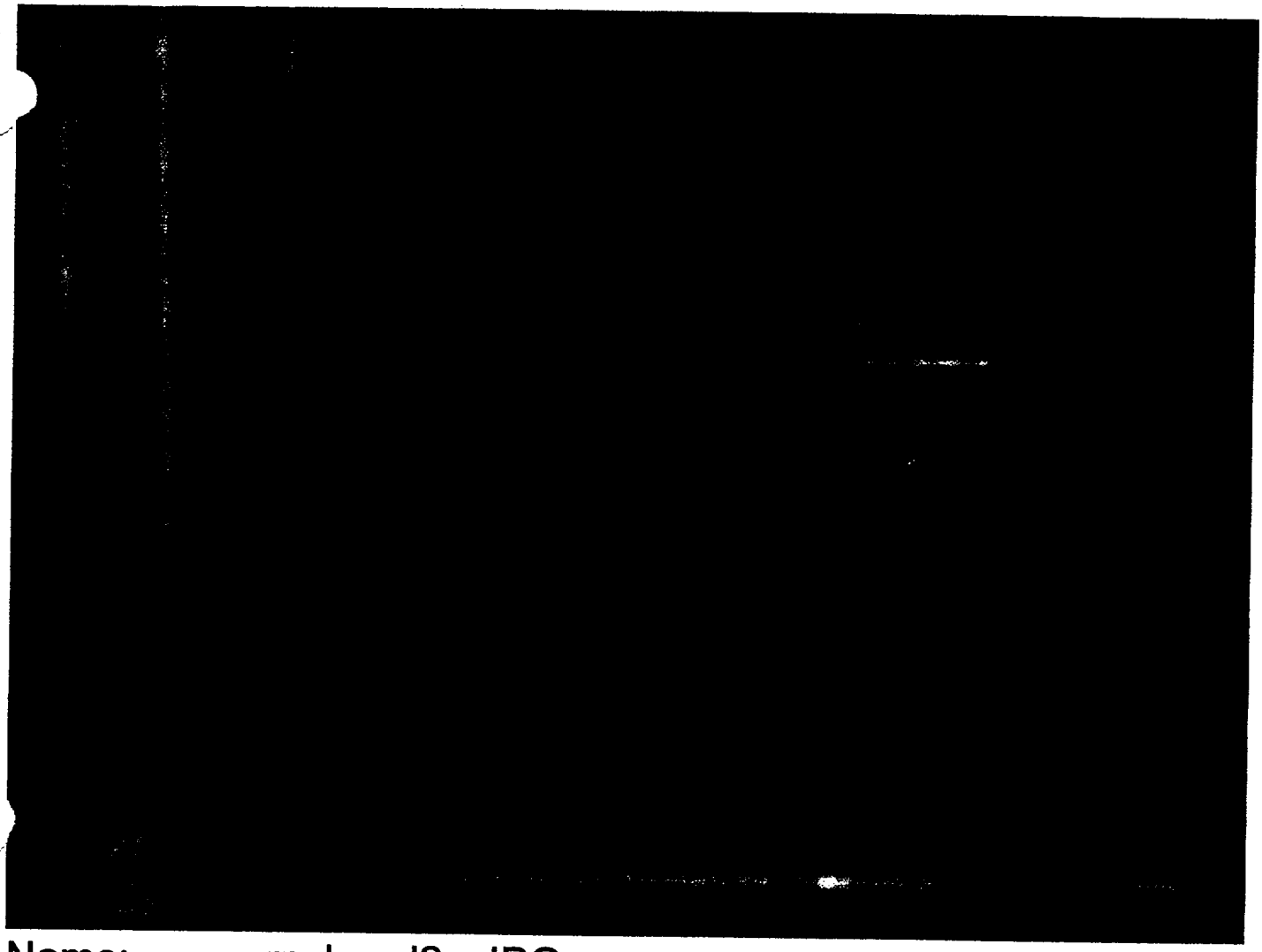

Name: rpvhead2a.JPG
Date: 03/05/01 2:37:24 PM
Dimensions: 640 x 480 pixels

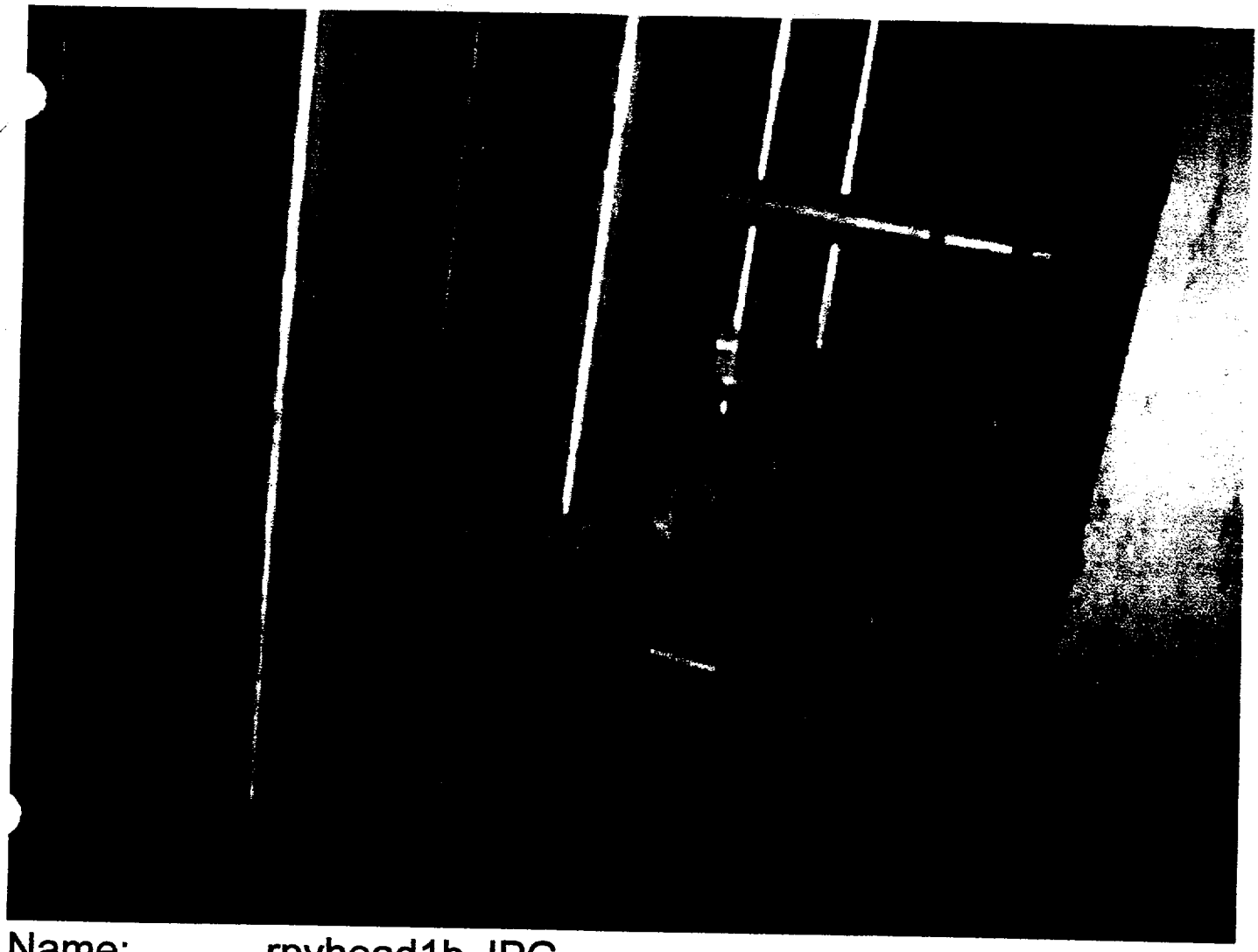

Name: rpvhead1b.JPG
Date: 03/05/01 2:35:19 PM
Dimensions: 640 x 480 pixels

L3.4

Westinghouse
Electric Company, LLC

ALA-01-047

Box 355
Pittsburgh, Pennsylvania 15230-0355

May 7, 2001

Mr. D. N. Morey, Vice President
Farley Project
Southern Nuclear Operating Company
P. O. Box 1295
Birmingham, Alabama 35201-1295

Ref: Purchase Order
B6456W06538

Attention: Mr. David Jones
Ms. Dee Dee Champion

SOUTHERN NUCLEAR OPERATING COMPANY
JOSEPH M. FARLEY NUCLEAR PLANT
UNIT 2

Transmittal of Final Field Service Report for Head Penetration Inspection – 2R14

Dear Mr. Morey:

In response to the referenced purchase order, Westinghouse proceeded on an expedited basis to perform a reactor vessel (R.V.) head penetration visual inspection on all 69 head penetrations in the area around the head adapter penetrations. This inspection was conducted on the outside surface of the head, under the mirror insulation, at Farley Unit 2 during the 2R14 refueling outage. The objective of this R.V. head penetration visual inspection, which was conducted by Westinghouse Nuclear Services and Brooks Associates, was to look for evidence of potential leakage as indicated by boric acid residue in the area around the annulus between the penetration stalk and the penetration hole. Boric acid in this area may be indicative of a through wall leak in the Inconel penetration stalk or attachment weld on the underside of the R.V. head.

The crew and equipment arrived on Friday, April 20, 2001, and completed inprocessing, badging, a pre-job meeting with Farley Plant personnel, and a walkdown of the work area as well as the area around the R.V. head stand. Scaffolding had been completed prior to the arrival of the crew on 4/20/01, and insulation removal/rearrangement was performed on 4/21/01. The Westinghouse crew consisted of six men, 3 men per shift. Each shift consisted of one Westinghouse supervisor and two technicians from Brooks Associates to perform the inspection.

The video equipment consisted of a Welch Allyn 15' video probe, a VCR / monitor, and screen writer. The equipment was pre-qualified for visual acuity per the Westinghouse Field Procedure EN 2.4.1 APR-1 Rev. 0 on 4/21/01.

Appendix B of the Field Service Procedure (EN 2.4.1 APR-1 Rev. 0) contains a listing of the 69 head penetrations inspected and notes on the conditions found in the areas around each specific location. There was no apparent evidence of boric acid residue in the vicinity of any of the head penetrations at the interface between the outside diameter of the R.V. head and the penetration stalk. Several locations had evidence of white spots on the penetration stalk above the penetration / R.V. head interface, a condition that is not unusual for locations that have been vented or disassembled in the past. The general condition of the areas of concern looked very good, with little debris and/or foreign objects. This effort was conducted on a best effort basis for the visual inspection of all 69 penetrations with the intent to view as completely as possible around the penetration stalk (360-degree inspection around the penetration stalk). All 69 penetrations were inspected and recorded in Appendix B of Field Service Procedure EN 2.4.1 APR-1 Rev. 0, as well as on two video tapes.

The R.V. head penetration visual inspection was completed in approximately 4 shifts, working two twelve-hour shifts per day. RWP 2705 was used for the visual inspection of the head penetrations while the R.V. head was in its storage stand. The total radiation exposure for the six man Westinghouse crew was 0.735 REM.

A complete, unedited video of the inspection and the completed procedure were provided to Ms. Dee Dee Champion on Sunday, April 22, 2001.

Should you have any questions, please feel free to contact Mr. John Barber on (412) 374-3778, or me at (412) 374-2250.

Very truly yours,

WESTINGHOUSE ELECTRIC COMPANY

T. W. Wallace, Manager
Southern Nuclear - Farley Projects

SGR PRESERVICE EXAMINATIONS

SH(RED

Farley Nuclea[illegible] lant
Ultrasonic Calibration and Examination Record

FNP-0-I [illegible]-100.41
Southern Nuclear Operating Company

Unit	Sketch/Component Number	Date	Sheet No.
2	APR1-4100-4R	04/04/01	S01F2U088 Page 1 of 4

Procedure/Rev./TCN	Couplant/Batch No.	ThermometerSN/Cal Due Date	Linearity Sheet No.
FNP-0-NDE-100.41 / 4 / N/A	Ultragel II / 00125	FNP-EDT-9003 / 10-11-02	S01F2L001

Instrument

Instrument	Panametrics / Epoch III
Serial No.	00409506

	Axial dB	Circ dB
Reference	71	NA
Scanning	71	NA
Reject	0%	
Frequency	BROADBAND	
Mode	DUAL	
Damping	400 OHMS	

Search Unit

Transducer Mfg.	KBA qea 4-8-01
Serial Number	E12369/E12365
Model No.	ALPHA
Size / No.	1.0" Shape Round
Frequency/Mode	1.0 / Long.
"A" Dimension	1"
Nom Angle	45°
Meas Angle	43°
Cable Type / No. Conn.	RG174/0
Cable Length	6'

Calibration Block

Cal. Blk. No.	ALA/APR-33
Thickness	2.487"
Cal. Temp	75 °F
Cal. In	7:30
Cal. Chk.	09:12
Cal. Out	17:15
Ref. Blk. No.	LMT-048
Reflector/dB	2" RAD./55
Amp/Sweep	80 % / 4.0

Axial Scan Calibration

Cal. Refl.	Signal Amp.	Sweep Div.	Wmax
1/4T	60	1.7	0.8"
1/2T	80	3.5	1.6"
3/4T	65	4.8	1.9"
ID notch	50	6.6	2.6"

Circ Scan Calibration

Cal. Refl.	Signal Amp.	Sweep Div.	Wmax
	NA		
1/2T			
3/4T			
ID notch			

Calibration Remarks:

TAPERED CONFIGURATION PREVENTED CIRC SCAN FROM REACHING CODE VOLUME ON THE ELBOW SIDE.

Comp Temp. 73 °F **Configuration -** ELBOW TO SAFE END **Wo Loc.** BOTTOM OF TAPER **Lo Loc.** ELBOW EXTRADOS

Scan Dir.	Results NI	NRI	RI	Ind No.	% DAC	Length L1	Lmax	L2	Reference Measurement W1	Wmax	W2	Sweep Position S1	Smax	S2	Thickness 1"<--	C/L	-->1"	Notes:
5	○	○	●	1	125	N/A	43.5"	N/A	N/A	2.5"	N/A	N/A	3.12"	N/A	2.75"	3.0"	3.3"	NOTE 1

Examination/Limitation Remarks: NOTE 1-COUNTERBORE SEEN 360 DEGREE INTERMITTMENT. SCANNED AT REFERENCE GAIN DUE TO EXCESSIVE NOISE LEVEL IN COMPONENT.
* COMBINED COVERAGE FROM ALL SCANS qea 4-8-01 Reference IER-003 for indication evaluation. qea 4-9-01

Total Length of Weld	Crown Width	Total Length of Weld Examined	Extent of Perpendicular Scans (W)	Extent of Parallel Scans (L)
115	2"	5 (L) 115 2 (L) N/A 7 and 8 (W) 0	5- From 3.2 to 1.0 2- From N/A to N/A	From (5) 0 to (2) 0

Primary Examiner	Level	Initials	Assistant Examiner	Level	Initials	Non-Technical Review	Date
Jerry W. Newgard	II	JN	N/A	N/A		Paul Hickman	04-08-01

SNC NDE Level II/III Review	Date	Percentage of Code Coverage	ANII Review	Date
J. Earl Aycock L-III	4-8-01	* 71.25	[illegible]	4/12/01

Revision 4

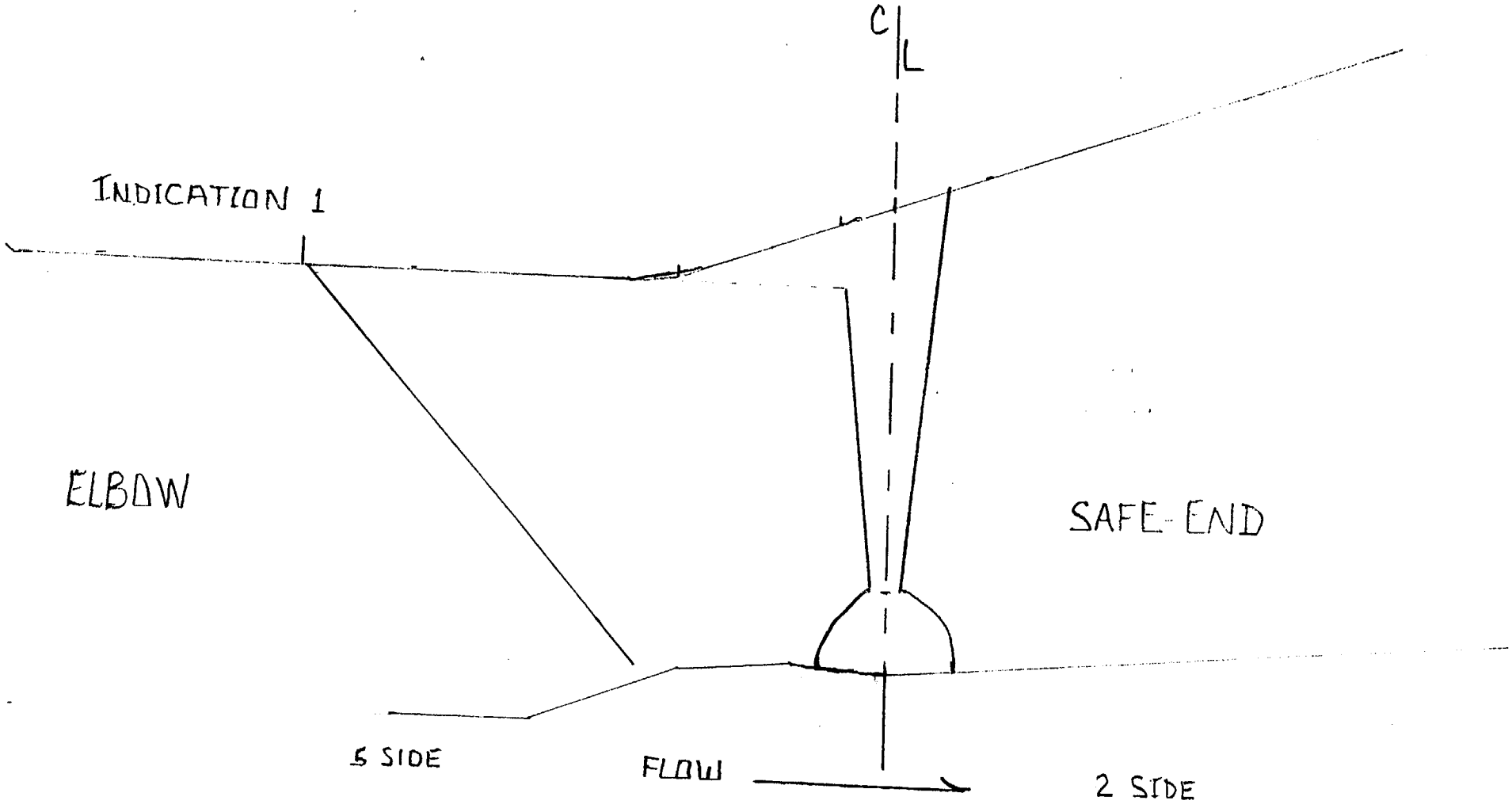

APR1-4IDD-4R

GEW 4-8-01

S01F2U088 2 of 4

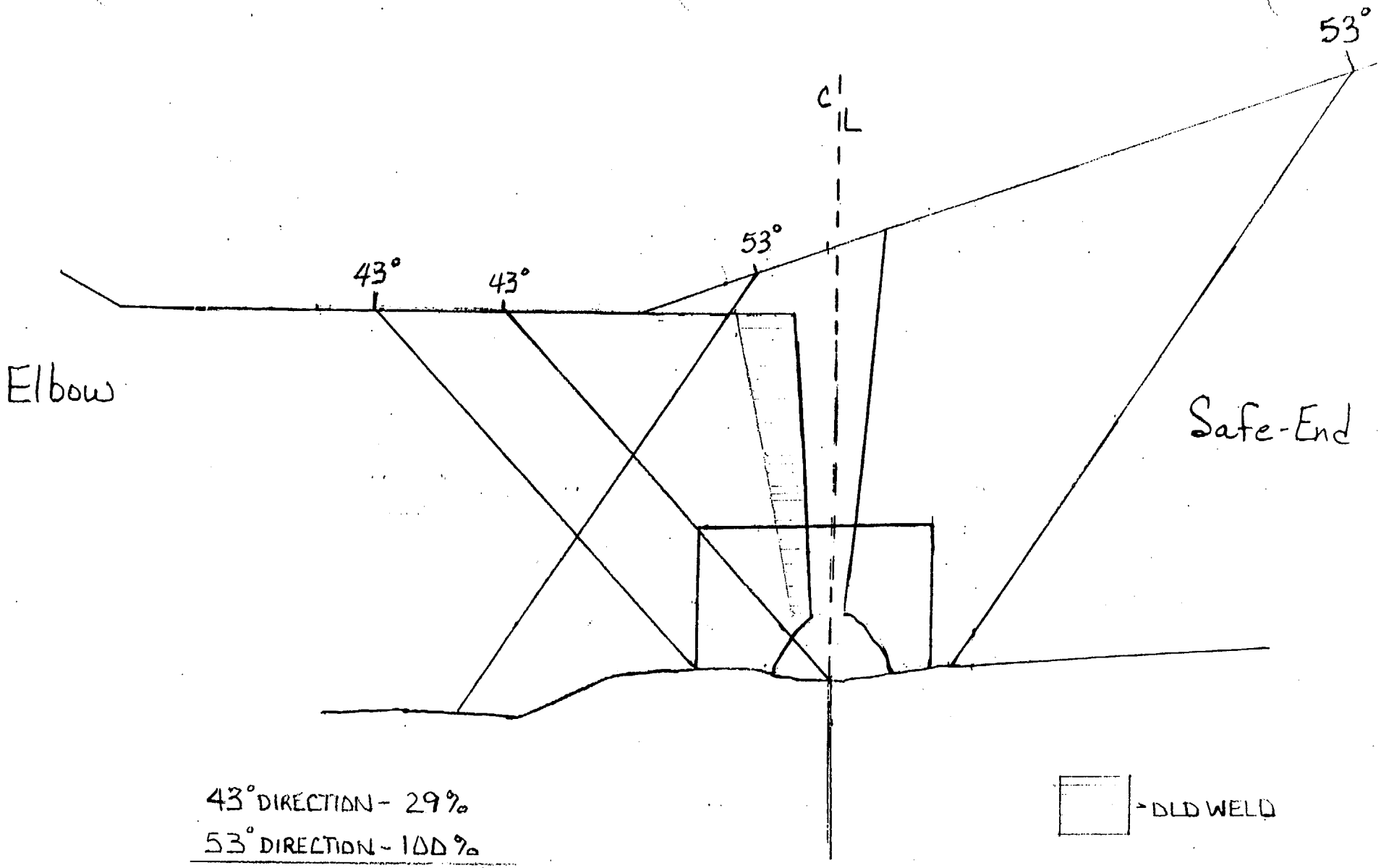

43° DIRECTION - 29%

53° DIRECTION - 100%

TOTAL AXIAL - 64.5% Qu 4801

TYPICAL AXIAL CODE COVERAGE

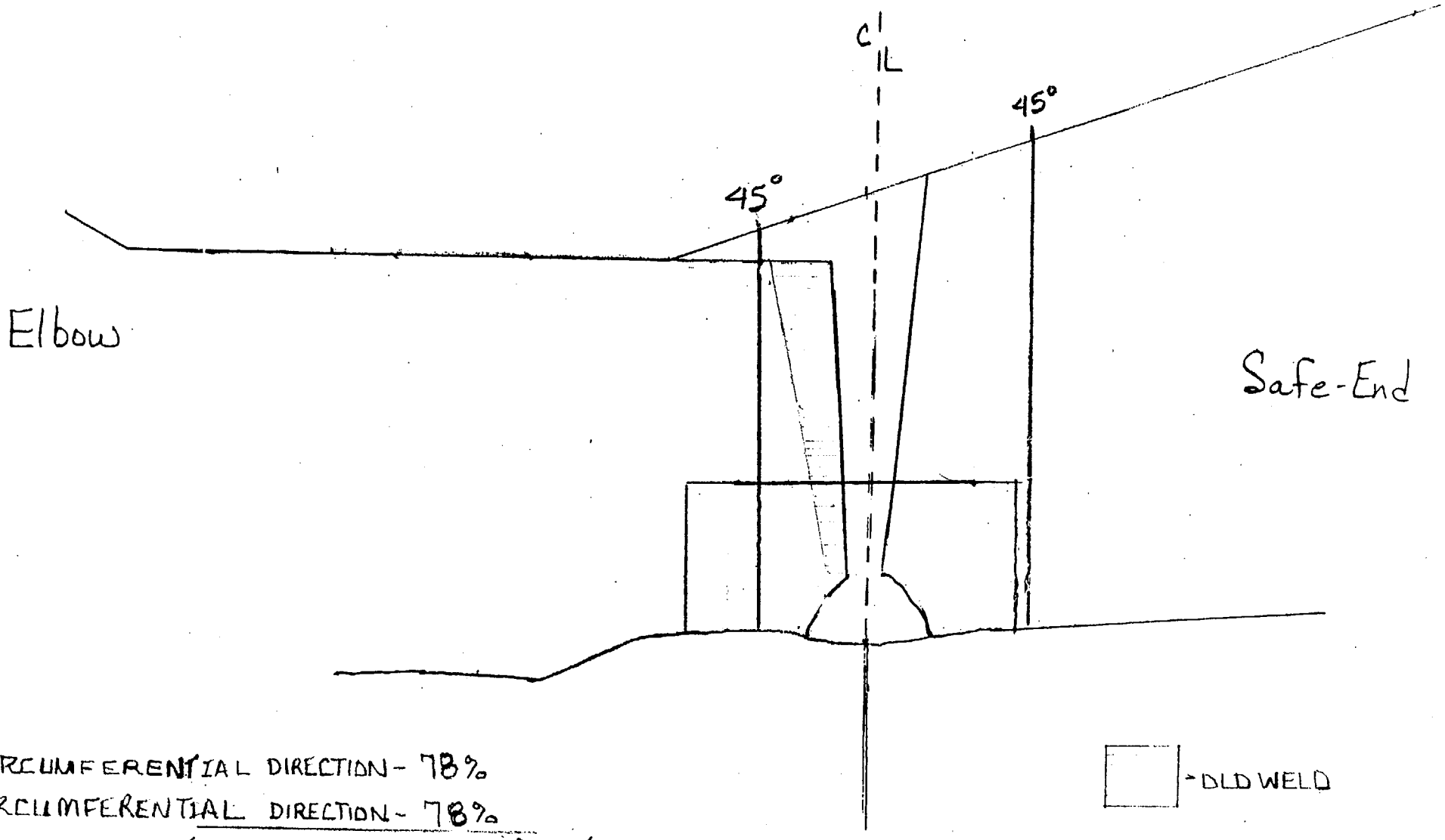

7 CIRCUMFERENTIAL DIRECTION - 78%
8 CIRCUMFERENTIAL DIRECTION - 78%
TOTAL - 78 % [illegible] 4-8-01

TYPICAL CIRC CODE COVERAGE

SH RED

Farley Nuclea. . lant
Ultrasonic Calibration and Examination Record

FNP-0-N. E-100.41
Southern Nuclear Operating Company

Unit	Sketch/Component Number	Date	Sheet No.
2	APR1-4100-4R	04/04/01	S01F2U076 Page 1 of 1

Procedure/Rev./TCN	Couplant/Batch No.	ThermometerSN/Cal Due Date	Linearity Sheet No.
FNP-0-NDE-100.41 / 4 / N/A	Ultragel II / 00125	FNP-EDT-9003 / 10-11-02	S01F2L007

Instrument

Instrument	Panametrics / Epoch IIB	
Serial No.	92042604	
	Axial dB	Circ dB
Reference	73.0	NA
Scanning	73.0	NA
Reject	0%	
Frequency	2.25 MHz	
Mode	DUAL	
Damping	400 OHMS	

Search Unit

Transducer Mfg.	KBA		
Serial Number	M18125/A21144		
Model No.	113-261-600		
Size / No.	1.0"/2	Shape	Round
Frequency/Mode	1.0 / Long.		
"A" Dimension	0.9"		
Nom Angle	53°		
Meas Angle	35°		
Cable Type / No. Conn.	RG174/0		
Cable Length	6'		

Calibration Block

Cal. Blk. No.	ALA-61
Thickness	3"
Cal. Temp	75 °F
Cal. In	7:53
Cal. Chk.	13:49
Cal. Out	17:21
Ref. Blk. No.	LMT-048
Reflector/dB	1"RAD/53
Amp/Sweep	70 % / 1.6

Axial Scan Calibration				Circ Scan Calibration			
Cal. Refl.	Signal Amp.	Sweep Div.	Wmax	Cal. Refl.	Signal Amp.	Sweep Div.	Wmax
ID NOTCH	90%	6.0	2.1	N/A			

Calibration Remarks:

Comp Temp. 75 °F **Configuration -** ELBOW TO SAFE END **Wo Loc.** BOTTOM OF TAPER **Lo Loc.** ELBOW EXTRADOS

Scan Dir.	Results NI	NRI	RI	Ind No.	% DAC	Length L1	Lmax	L2	Reference Measurement W1	Wmax	W2	Sweep Position S1	Smax	S2	Thickness 1"<--	C/L	-->1"	Notes:
2	○	◉	○															

Examination/Limitation Remarks: EXAM. PERFORMED AT REFERENCE GAIN DUE TO EXCESSIVE NOISE LEVEL IN COMPONENT. SHEAR COMPONENT REDIRECTED, OBSERVED 360°.
* COMBINED COVERAGE FROM ALL SCANS. JEA 4-8-01

Total Length of Weld	Crown Width	Total Length of Weld Examined	Extent of Perpendicular Scans (W)	Extent of Parallel Scans (L)
115	2"	5 (L) N/A 2 (L) 115 7 and 8 (W) N/A	5- From N/A to N/A 2- From 5.2 to -0.9	From (5) N/A to (2) N/A

Primary Examiner	Level	Initials	Assistant Examiner	Level	Initials	Non-Technical Review	Date
Robert G. Auer	II	RGA	N/A	N/A		Paul Williams	04-08-01

SNC NDE Level II/III Review	Date	Percentage of Code Coverage *	ANII Review	Date
J. Edin Alycock L-III	4-8-01	71.25	C G Ward	4/12/01

Revision 4

SH IED

Farley Nuclea. . lant
Ultrasonic Calibration and Examination Record

FNP-0-N_ _-100.41
Southern Nuclear Operating Company

Unit	Sketch/Component Number	Date	Sheet No.
2	APR1-4100-4R	04/04/01	S01F2U080 Page 1 of 1

Procedure/Rev./TCN	Couplant/Batch No.	ThermometerSN/Cal Due Date	Linearity Sheet No.
FNP-0-NDE-100.41 / 4 / N/A	Ultragel II / 00125	FNP-EDT-9003 / 10-11-02	S01F2L007

Instrument

Instrument	Panametrics / Epoch IIB
Serial No.	92042604

	Axial dB	Circ dB
Reference	N/A	72
Scanning	N/A	78
Reject	0%	
Frequency	2.25 MHz	
Mode	DUAL	
Damping	400 OHMS	

Search Unit

Transducer Mfg.	KBA
Serial Number	M06171/M06172
Model No.	113-262-600
Size / No.	1.0"/2 Shape Round
Frequency/Mode	2.25 / Long.
"A" Dimension	1"
Nom Angle	45°
Meas Angle	47°
Cable Type / No. Conn.	RG174/0
Cable Length	6'

Calibration Block

Cal. Blk. No.	ALA-61
Thickness	3"
Cal. Temp	75 °F
Cal. In	8:04
Cal. Chk.	15:30
Cal. Out	17:27
Ref. Blk. No.	18 deg shoe
Reflector/dB	NA/63
Amp/Sweep	80 % / 2.5

Axial Scan Calibration				Circ Scan Calibration			
Cal. Refl.	Signal Amp.	Sweep Div.	Wmax	Cal. Refl.	Signal Amp.	Sweep Div.	Wmax
				ID notch	80%	7.7	5.2

Calibration Remarks:

SINCE WEDGES HAVE 18 DEGREE TILT, CAL CHECK WAS PERFORMED BY COUPLING TO OPPOSITE DIRECTION WEDGE.

Comp Temp.	Configuration -	Wo Loc.	Lo Loc.
73 °F	ELBOW TO SAFE END	BOTTOM OF TAPER	ELBOW EXTRADOS

Scan Dir.	Results NI	NRI	RI	Ind No.	% DAC	Length L1	Lmax	L2	Reference Measurement W1	Wmax	W2	Sweep Position S1	Smax	S2	Thickness 1"<--	C/L	-->1"	Notes:
7	○	◉	○															

Examination/Limitation Remarks: 18 DEGREE RIGHT TILT WEDGE.
* COMBINED COVERAGE FROM ALL SCANS. JEL 4-8-01

Total Length of Weld	Crown Width	Total Length of Weld Examined	Extent of Perpendicular Scans (W)	Extent of Parallel Scans (L)
115	2"	5 (L) N/A 2 (L) N/A 7 and 8 (W) 115	5- From N/A to N/A 2- From N/A to N/A	From (5) +0.8 to (2) NL

Primary Examiner	Level	Initials	Assistant Examiner	Level	Initials	Non-Technical Review	Date
Robert G. Auer	II	RGA	N/A	N/A		Dave Schalmes	04-08-01

SNC NDE Level II/III Review	Date	Percentage of Code Coverage *	ANII Review	Date
J. Eric Clycock L-III	4-8-01	71.25	[illegible]	4/12/01

Revision 4

SH RED

Farley Nuclear Plant
Ultrasonic Calibration and Examination Record

FNP-0-N...E-100.41
Southern Nuclear Operating Company

Unit	Sketch/Component Number	Date	Sheet No.
2	APR1-4100-4R	04/04/01	S01F2U084 Page 1 of 1

Procedure/Rev./TCN	Couplant/Batch No.	ThermometerSN/Cal Due Date	Linearity Sheet No.
FNP-0-NDE-100.41 / 4 / N/A	Ultragel II / 00125	FNP-EDT-9003 / 10-11-02	S01F2L007

Instrument

Instrument	Panametrics / Epoch IIB	
Serial No.	92042604	
	Axial dB	Circ dB
Reference	N/A	74
Scanning	N/A	80
Reject	0%	
Frequency	2.25 MHz	
Mode	DUAL	
Damping	400 OHMS	

Search Unit

Transducer Mfg.	KBA
Serial Number	00MBN6/00MBN7
Model No.	113-262-600
Size / No.	1.0"/2 Shape Round
Frequency/Mode	2.25 / Long.
"A" Dimension	1"
Nom Angle	45°
Meas Angle	47°
Cable Type / No. Conn.	RG174/0
Cable Length	6'

Calibration Block

Cal. Blk. No.	ALA-61
Thickness	3"
Cal. Temp	75 °F
Cal. In	7:57
Cal. Chk.	15:00
Cal. Out	17:24
Ref. Blk. No.	18 deg shoe
Reflector/dB	NA/74
Amp/Sweep	80 % / 2.4

Axial Scan Calibration				Circ Scan Calibration			
Cal. Refl.	Signal Amp.	Sweep Div.	Wmax	Cal. Refl.	Signal Amp.	Sweep Div.	Wmax
				ID notch	80%	7.0	4.8

Calibration Remarks:

SINCE WEDGES HAVE 18 DEGREE TILT, CAL CHECK WAS PERFORMED BY COUPLING TO OPPOSITE DIRECTION WEDGE.

Comp Temp. 73 °F **Configuration -** ELBOW TO SAFE END **Wo Loc.** BOTTOM OF TAPER **Lo Loc.** ELBOW EXTRADOS

Scan Dir.	Results NI	NRI	RI	Ind No.	% DAC	Length L1	Lmax	L2	Reference Measurement W1	Wmax	W2	Sweep Position S1	Smax	S2	Thickness 1"<--	C/L	-->1"	Notes:
8	○	◉	○															

Examination/Limitation Remarks: 18 DEGREE LEFT TILT WEDGE.

* COMBINED COVERAGE FROM ALL SCANS. QEA 4-8-01

Total Length of Weld	Crown Width	Total Length of Weld Examined	Extent of Perpendicular Scans (W)	Extent of Parallel Scans (L)
115	2"	5 (L) N/A 2 (L) N/A 7 and 8 (W) 115	5- From N/A to N/A 2- From N/A to N/A	From (5) +0.8 to (2) NL

Primary Examiner	Level	Initials	Assistant Examiner	Level	Initials	Non-Technical Review	Date
Robert G. Auer	II	RGA	N/A	N/A		Paul Hallman	04-08-01

SNC NDE Level II/III Review	Date	Percentage of Code Coverage *	ANII Review	Date
J. Eric Aycock L-III	4-8-01	71.25	C G Ward	4/12/01

Revision 4

WP& IR #	NONDESTRUCTIVE EXAMINATION REPORT LIQUID PENETRANT EXAMINATION		REPORT NUMBER
P-RCA-230			PT- 01 - 179
ISO # / DWG # / FSK #	JOB NAME	JOB NUMBER	DATE
FSK-M-266	Farley Unit 2 SGRP	23734	04-03-01

COMPONENT CONFIGURATION	TIME OF EXAM	PROCEDURE / REV
HOT-LEG SAFE END TO ELBOW	☒ N/A ☐ PRE-PWHT ☐ POST-PWHT	PT (SR)-ASME III/XI R/ 2

CODE / WELD CLASS	SURFACE CONDITION	PIPE DIA	MATL TYPE	COMPONENT TEMP
ASME ~~XI~~ / ~~IBW~~ WB QEW 4-9-01	☒ GROUND ☐ AS WELDED	31"	☐ C/S ☒ S/S ☐ D/M	67 °F PENET TEMP 64 °F

CLEANER / REMOVER	PENETRANT	DEVELOPER
MFR. MAGNUFLUX	MFR. MAGNUFLUX	MFR. MAGNUFLUX
TYPE SKC-S	TYPE SKL-SP	TYPE SKD-S2
BATCH # 00C06K	BATCH # 99L08K	BATCH # 00G07K

DEFECT CODE: C - CRACKS R - ROUNDED INDICATIONS L - LINEAR INDICATION

PART OR WELD NUMBER	DISPOSITION ACC	DISPOSITION REJ	DEFECT CODE	REMARKS
FW-1-SG (~~ID~~ OD)	✓			NO INDICATIONS
HOT-LEG BC 04-03-01				
ISI #-APR1-4100-4R				"FINAL"
QEW 4-9-01				

SKETCH / COMMENTS: FINAL PT AFTER ISI GRIND

M&TE I.D. # 198057 CAL.DUE 07-25-01	EXAMINER	LEVEL	DATE
	B Cargo	II	04-03-01
NOTES:	REVIEWER	LEVEL	DATE
	S J Hall	III	4/4/01

SNC REVIEW - J. Eric Aycock L-III 4-9-01 ANII REVIEW: CG Wand 4/12/01

SHARED

Farley Nuclear Plant
Ultrasonic Calibration and Examination Record

FNP-0-N[illegible]-100.41
Southern Nuclear Operating Company

Unit	Sketch/Component Number	Date	Sheet No.
2	APR1-4100-5R	04/04/01	S01F2U087 Page 1 of 5

Procedure/Rev./TCN	Couplant/Batch No.	ThermometerSN/Cal Due Date	Linearity Sheet No.
FNP-0-NDE-100.41 / 4 / N/A	Ultragel II / 00125	FNP-EDT-9003 / 10-11-02	S01F2L001

Instrument

Instrument: Panametrics / Epoch III
Serial No. 00409506

	Axial dB	Circ dB
Reference	71	NA
Scanning	71	NA
Reject	0%	
Frequency	BROADBAND	
Mode	DUAL	
Damping	400 OHMS	

Search Unit

Transducer Mfg. KBA
Serial Number E12369/E12365 (4ea 4-8-01 8)
Model No. ALPHA
Size / No. 1.0" Shape Round
Frequency/Mode 1.0 / Long.
"A" Dimension 1"
Nom Angle 45°
Meas Angle 43°
Cable Type / No. Conn. RG174/0
Cable Length 6'

Calibration Block

Cal. Blk. No. ALA/APR-33
Thickness 2.487"
Cal. Temp 75 °F
Cal. In 7:30
Cal. Chk. 09:12
Cal. Out 17:15
Ref. Blk. No. LMT-048
Reflector/dB 2" RAD. / 55
Amp/Sweep 80 % / 4.0

Axial Scan Calibration

Cal. Refl.	Signal Amp.	Sweep Div.	Wmax
1/4T	60	1.7	0.8"
1/2T	80	3.5	1.6"
3/4T	65	4.8	1.9"
ID notch	50	6.6	2.6"

Circ Scan Calibration

Cal. Refl.	Signal Amp.	Sweep Div.	Wmax
NA			

Calibration Remarks:

TAPERED CONFIGURATION PREVENTED CIRC SCAN FROM REACHING CODE VOLUME ON THE ELBOW SIDE.

Comp Temp. 73 °F
Configuration - SAFE END TO ELBOW
Wo Loc. BOTTOM OF TAPER
Lo Loc. ELBOW EXTRADOS

Scan Dir.	Results NI	NRI	RI	Ind No.	% DAC	Length L1	Lmax	L2	Reference Measurement W1	Wmax	W2	Sweep Position S1	Smax	S2	Thickness 1"<--	C/L	-->1"	Notes:
2	○	○	●	1	150	N/A	69.5	N/A	N/A	2.6"	N/A	N/A	3.18"	N/A	2.75"	3.00"	3.2"	NOTE 1

Examination/Limitation Remarks: NOTE 1-COUNTERBORE SEEN 360 DEGREE INTERMITTENT. SCANNED AT REFERENCE GAIN DUE TO NOISE LEVEL IN COMPONENT.
* COMBINED COVERAGE FROM ALL SCANS 4ea 4-8-01 Reference IER-005 for indication evaluation. 4ea 4-9-01

Total Length of Weld	Crown Width	Total Length of Weld Examined	Extent of Perpendicular Scans (W)	Extent of Parallel Scans (L)
115	2"	5 (L) N/A 2 (L) 115 7 and 8 (W) 0	5- From N/A to N/A 2- From 3.0 to 1.0	From (5) 0 to (2) 0

Primary Examiner	Level	Initials	Assistant Examiner	Level	Initials	Non-Technical Review	Date
Jerry W. Newgard	II	JN	N/A	N/A		Paul Hickman	04-08-01

SNC NDE Level II/III Review	Date	Percentage of Code Coverage	ANII Review	Date
J. Eric Aycock L-III	4-8-01	* 71.25	C G Ward	4/12/01

Revision 4

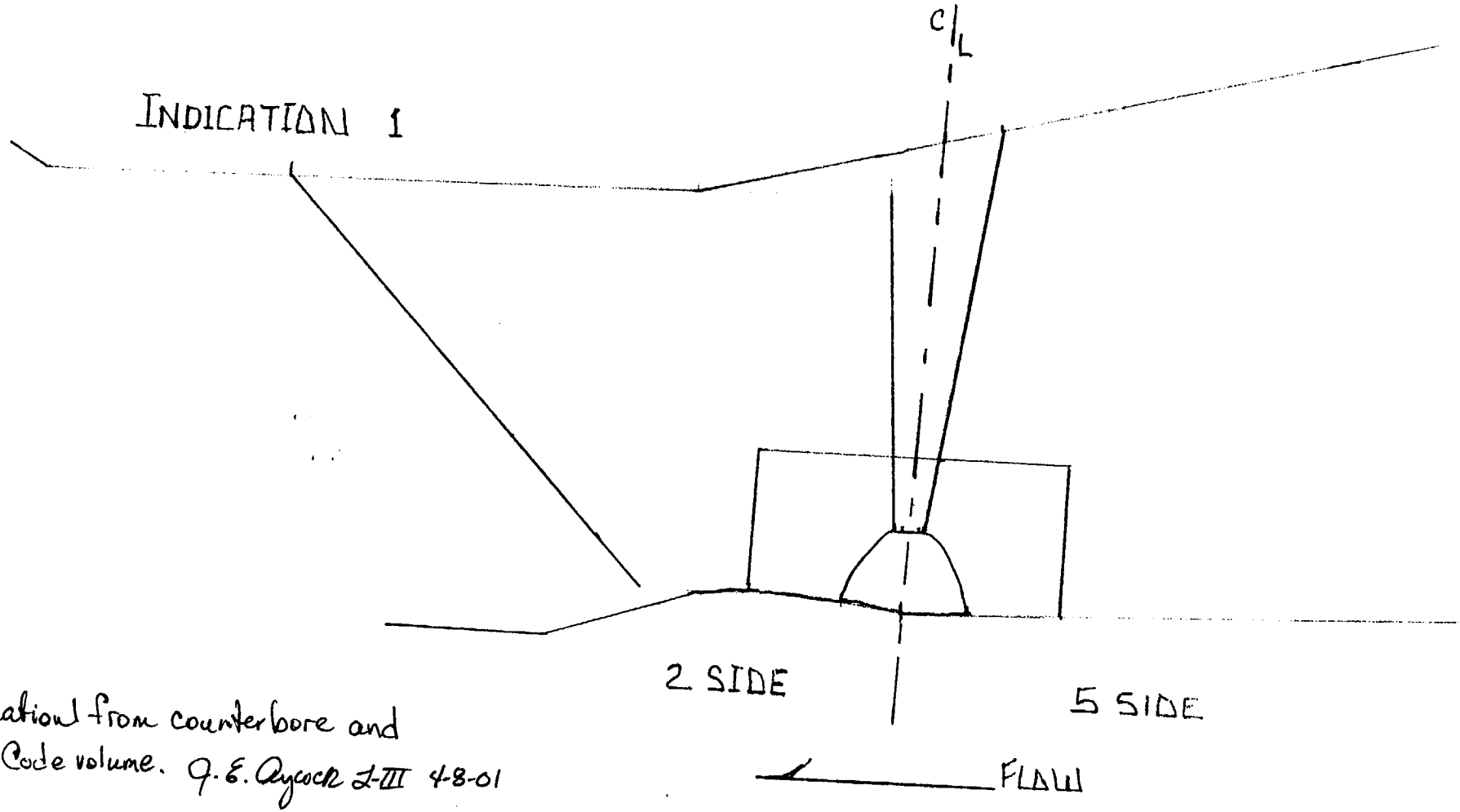

Indications from counterbore and not in Code volume. G.E. Aycock L-III 4-8-01

APR1-4100-5R

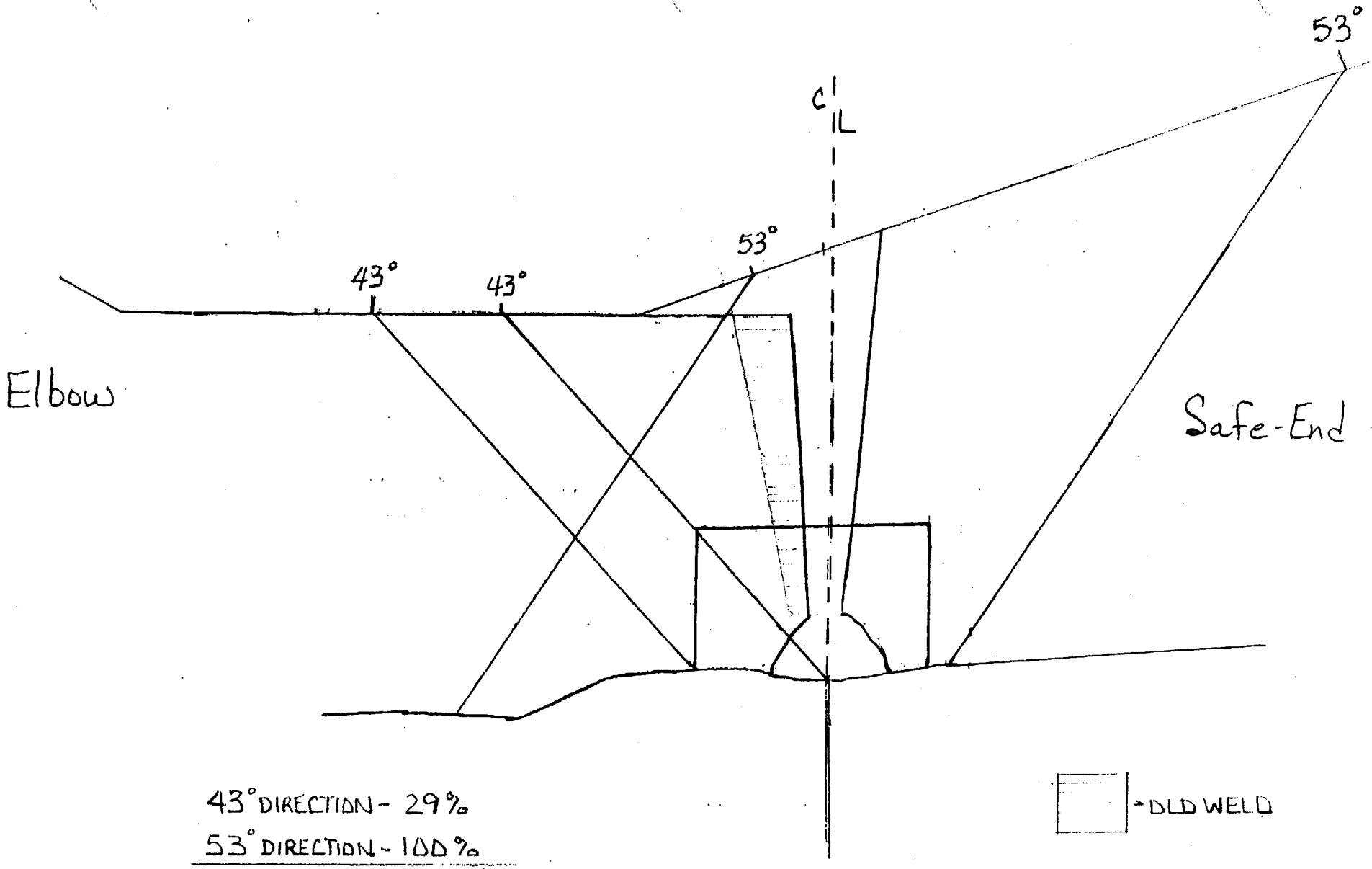

43° DIRECTION - 29%

53° DIRECTION - 100%

TOTAL AXIAL - 64.5% aea 4-8-01

TYPICAL AXIAL CODE COVERAGE

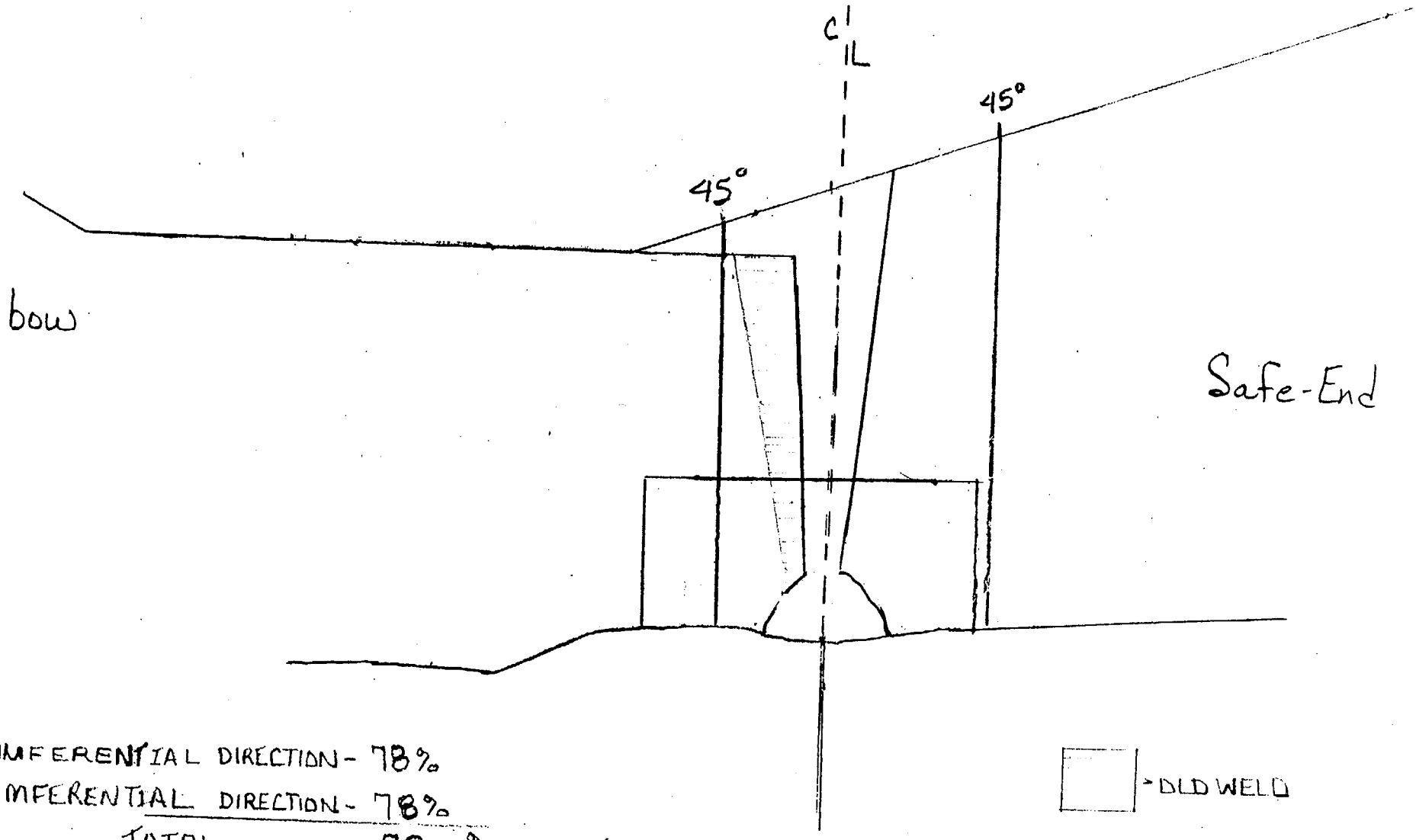

7 CIRCUMFERENTIAL DIRECTION - 78%
8 CIRCUMFERENTIAL DIRECTION - 78%
TOTAL - 78 % QEA 4-8-01

TYPICAL CIRC CODE COVERAGE

S01F2U087 4 of 5

Name: 2Bcoldlegid.JPG
Dimensions: 1600 x 1200 pixels

TYPICAL ID GEOMETRY FOR ALL RCS
SAFE END TO ELBOW AND ELBOW TO SAFEEND
WELDS

GEH 4-8-01

SH RED

Farley Nucle. lant
Ultrasonic Calibration and Examination Record

FNP-0-N-E-100.41
Southern Nuclear Operating Company

Unit	Sketch/Component Number	Date	Sheet No.
2	APR1-4100-5R	4/4/01	S01F2U075 Page 1 of 1

Procedure/Rev./TCN	Couplant/Batch No.	ThermometerSN/Cal Due Date	Linearity Sheet No.
FNP-0-NDE-100.41 / 4 / N/A	Ultragel II / 00125	FNP-EDT-9003 / 10-11-02	S01F2L007

Instrument

Instrument: Panametrics / Epoch IIB
Serial No. 92042604

	Axial dB	Circ dB
Reference	73.0	NA
Scanning	73.0	NA
Reject	0%	
Frequency	2.25 MHz	
Mode	DUAL	
Damping	400 OHMS	

Search Unit

Transducer Mfg. KBA
Serial Number M18125/A21144
Model No. 113-261-600
Size / No. 1.0"/2 Shape Round
Frequency/Mode 1.0 / Long.
"A" Dimension 0.9"
Nom Angle 53°
Meas Angle 35°
Cable Type / No. Conn. RG174/0
Cable Length 6'

Calibration Block

Cal. Blk. No. ALA-61
Thickness 3"
Cal. Temp 75 °F
Cal. In 7:53
Cal. Chk. 14:27
Cal. Out 17:21
Ref. Blk. No. LMT-048
Reflector/dB 1"RAD/53
Amp/Sweep 70 % / 1.6

Axial Scan Calibration				Circ Scan Calibration			
Cal. Refl.	Signal Amp.	Sweep Div.	Wmax	Cal. Refl.	Signal Amp.	Sweep Div.	Wmax
ID NOTCH	90%	6.0	2.1	N/A			

Calibration Remarks:

Comp Temp. 75 °F
Configuration - SAFE END TO ELBOW
Wo Loc. BOTTOM OF TAPER
Lo Loc. ELBOW EXTRADOS

Scan Dir.	Results NI	NRI	RI	Ind No.	% DAC	Length L1	Lmax	L2	Reference Measurement W1	Wmax	W2	Sweep Position S1	Smax	S2	Thickness 1"<--	C/L	-->1"	Notes:
5	○	◉	○															

Examination/Limitation Remarks: EXAMINATION PERFORMED AT REFERENCE dB DUE TO EXCESSIVE NOISE LEVEL. (1) SHEAR COMPONENT OBSERVED 360 DEGREES.
* COMBINED COVERAGE FROM ALL SCANS QEA 4-8-01

Total Length of Weld	Crown Width	Total Length of Weld Examined	Extent of Perpendicular Scans (W)	Extent of Parallel Scans (L)
115	2"	5 (L) 115 2 (L) N/A 7 and 8 (W) N/A	5- From -0.9 to 5.2 2- From N/A to N/A	From (5) N/A to (2) N/A

Primary Examiner	Level	Initials	Assistant Examiner	Level	Initials	Non-Technical Review	Date
Robert G. Auer	II	RGA	N/A	N/A		[illegible]	04-08-01

SNC NDE Level II/III Review	Date	Percentage of Code Coverage *	ANII Review	Date
[illegible] L-III	4-8-01	71.25	[illegible]	4/12/01

Revision 4

SH(RED

Farley Nucle. Plant
Ultrasonic Calibration and Examination Record

FNP-0-N.E-100.41
Southern Nuclear Operating Company

Unit	Sketch/Component Number	Date	Sheet No.
2	APR1-4100-5R	4/4/01	S01F2U083 Page 1 of 1

Procedure/Rev./TCN	Couplant/Batch No.	ThermometerSN/Cal Due Date	Linearity Sheet No.
FNP-0-NDE-100.41 / 4 / N/A	Ultragel II / 00125	FNP-EDT-9003 10-1-02	S01F2L007

Instrument

Instrument	Panametrics / Epoch IIB	
Serial No.	92042604	
	Axial dB	Circ dB
Reference	N/A	74
Scanning	N/A	80
Reject	0%	
Frequency	2.25 MHz	
Mode	DUAL	
Damping	400 OHMS	

Search Unit

Transducer Mfg.	KBA
Serial Number	00MBN6/00MBN7
Model No.	113-262-600
Size / No.	1.0"/2 Shape Round
Frequency/Mode	2.25 / Long.
"A" Dimension	1"
Nom Angle	45°
Meas Angle	47°
Cable Type / No. Conn.	RG174/0
Cable Length	6'

Calibration Block

Cal. Blk. No.	ALA-61
Thickness	3"
Cal. Temp	75 °F
Cal. In	7:57
Cal. Chk.	15:12
Cal. Out	17:24
Ref. Blk. No.	18 deg shoe
Reflector/dB	NA/74
Amp/Sweep	80 % / 2.4

Axial Scan Calibration				Circ Scan Calibration			
Cal. Refl.	Signal Amp.	Sweep Div.	Wmax	Cal. Refl.	Signal Amp.	Sweep Div.	Wmax
				ID notch	80%	7.0	4.8

Calibration Remarks:

SINCE WEDGES HAVE 18 DEGREE TILT, CAL CHECK WAS PERFORMED BY COUPLING TO OPPOSITE DIRECTION WEDGE.

Comp Temp.	Configuration -	Wo Loc.	Lo Loc.
73 °F	SAFE END TO ELBOW	BOTTOM OF TAPER	ELBOW EXTRADOS

Scan Dir.	Results NI	NRI	RI	Ind No.	% DAC	Length L1	Lmax	L2	Reference Measurement W1	Wmax	W2	Sweep Position S1	Smax	S2	Thickness 1"<--	C/L	-->1"	Notes:
7	○	◉	○															

Examination/Limitation Remarks: 18 DEGREE LEFT TILT WEDGE.

* COMBINED COVERAGE FROM ALL SCANS QEW 4-8-01

Total Length of Weld	Crown Width	Total Length of Weld Examined	Extent of Perpendicular Scans (W)	Extent of Parallel Scans (L)
115	2"	5 (L) N/A 2 (L) N/A 7 and 8 (W) 115	5- From N/A to N/A 2- From N/A to N/A	From (5) NL to (2) ~~1.3~~ -0.8 4-8-01 QEW

Primary Examiner	Level	Initials	Assistant Examiner	Level	Initials	Non-Technical Review	Date
Robert G. Auer	II	RGA	N/A	N/A		Paul Sullivan	04-08-01

SNC NDE Level II/III Review	Date	Percentage of Code Coverage *	ANII Review	Date
J. Eric Aycock L-III	4-8-01	71.25	C G Ward	4/12/01

Revision 4

SHARED

Farley Nuclear Plant
Ultrasonic Calibration and Examination Record

FNP-0-NDE-100.41
Southern Nuclear Operating Company

Unit	Sketch/Component Number	Date	Sheet No.
2	APR1-4100-5R	4/4/01	S01F2U079 Page 1 of 1

Procedure/Rev./TCN	Couplant/Batch No.	ThermometerSN/Cal Due Date	Linearity Sheet No.
FNP-0-NDE-100.41 / 4 / N/A	Ultragel II / 00125	FNP-EDT-9003 10-11-02	S01F2L007

Instrument

Instrument	Panametrics / Epoch IIB	
Serial No.	92042604	
	Axial dB	Circ dB
Reference	N/A	72
Scanning	N/A	78
Reject	0%	
Frequency	2.25 MHz	
Mode	DUAL	
Damping	400 OHMS	

Search Unit

Transducer Mfg.	KBA
Serial Number	M06171/M06172
Model No.	113-262-600
Size / No.	1.0"/2 Shape Round
Frequency/Mode	2.25 / Long.
"A" Dimension	1"
Nom Angle	45°
Meas Angle	47°
Cable Type / No. Conn.	RG174/0
Cable Length	6'

Calibration Block

Cal. Blk. No.	ALA-61
Thickness	3"
Cal. Temp	75 °F
Cal. In	8:04
Cal. Chk.	15:39
Cal. Out	17:27
Ref. Blk. No.	18 deg shoe
Reflector/dB	NA/63
Amp/Sweep	80 % / 2.5

Axial Scan Calibration				Circ Scan Calibration			
Cal. Refl.	Signal Amp.	Sweep Div.	Wmax	Cal. Refl.	Signal Amp.	Sweep Div.	Wmax
				ID notch	80%	7.7	5.2

Calibration Remarks:

SINCE WEDGES HAVE 18 DEGREE TILT, CAL CHECK WAS PERFORMED BY COUPLING TO OPPOSITE DIRECTION WEDGE.

Comp Temp. 73 °F **Configuration -** SAFE END TO ELBOW **Wo Loc.** BOTTOM OF TAPER **Lo Loc.** ELBOW EXTRADOS

Scan Dir.	Results NI	NRI	RI	Ind No.	% DAC	Length L1	Lmax	L2	Reference Measurement W1	Wmax	W2	Sweep Position S1	Smax	S2	Thickness 1"<--	C/L	-->1"	Notes:
8	○	◉	○															

Examination/Limitation Remarks: 18 DEGREE RIGHT TILT WEDGE.

* COMBINED COVERAGE FROM ALL SCANS 4ea 4-8-01

Total Length of Weld	Crown Width	Total Length of Weld Examined	Extent of Perpendicular Scans (W)	Extent of Parallel Scans (L)
115	2"	5 (L) N/A 2 (L) N/A 7 and 8 (W) 115	5- From N/A to N/A 2- From N/A to N/A	From (5) NL to (2) ~~1.3~~ -0.8" 4ea 4-8-01

Primary Examiner	Level	Initials	Assistant Examiner	Level	Initials	Non-Technical Review	Date
Robert G. Auer	II	RGA	N/A	N/A		Paul Nicholson	04-08-01

SNC NDE Level II/III Review	Date	Percentage of Code Coverage	ANII Review	Date
J. Eric Aycock L-III	4-8-01	* 71.25	CG Ward	4/12/01

Revision 4

WP& IR #	NONDESTRUCTIVE EXAMINATION REPORT LIQUID PENETRANT EXAMINATION		REPORT NUMBER
P-RCA-230			PT- 01 - 178
ISO # / DWG # / FSK #	JOB NAME	JOB NUMBER	DATE
FSK-M-266	Farley Unit 2 SGRP	23734	04-03-01

COMPONENT CONFIGURATION	TIME OF EXAM	PROCEDURE / REV
COLD-LEG. SAFE END TO ELBOW	☑ N/A ☐ PRE-PWHT ☐ POST-PWHT	PT (SR)-ASME III/XI R/ 2

CODE / WELD CLASS	SURFACE CONDITION	PIPE DIA	MATL TYPE	COMPONENT TEMP
ASME XI / IBW	☑ GROUND ☐ AS WELDED	31"	☐ C/S ☑ S/S ☐ D/M	67 °F PENET TEMP 64 °F

CLEANER / REMOVER	PENETRANT	DEVELOPER
MFR. MAGNUFLUX	MFR. MAGNUFLUX	MFR. MAGNUFLUX
TYPE SKC-S	TYPE SKL-SP	TYPE SKD-S2
BATCH # 00C06K	BATCH # 99L08K	BATCH # 00G07K

DEFECT CODE: C - CRACKS R - ROUNDED INDICATIONS L - LINEAR INDICATION

PART OR WELD NUMBER	DISPOSITION ACC	DISPOSITION REJ	DEFECT CODE	REMARKS
FW-2-SG (OD)	✓			NO INDICATIONS
COLD-LEG				
[ISI # - APR1-4100-5R				"FINAL"
4EG 4-9-01]				

SKETCH / COMMENTS: FINAL PT AFTER ISI GRIND.

M&TE I.D. # 198057 CAL.DUE 07-25-01	EXAMINER STEPHEN HOFFMAN	LEVEL II	DATE 04-03-01
NOTES:	REVIEWER SJ Stoll	LEVEL III	DATE 4/4/01

SNC Review J. Eric Aycock L-III 4-9-01 ANII REVIEW: EG Wand 4/12/01

SHARED

Farley Nuclear Plant
Ultrasonic Calibration and Examination Record

FNP-0-I...-100.41
Southern Nuclear Operating Company

Unit	Sketch/Component Number	Date	Sheet No.
2	APR1-4200-4R	04/03/01	S01F2U090 Page 1 of 3

Procedure/Rev./TCN	Couplant/Batch No.	ThermometerSN/Cal Due Date	Linearity Sheet No.
FNP-0-NDE-100.41 / 4 / N/A	Ultragel II / 00125	FNP-EDT-9003 / 10-11-02	S01F2L001

Instrument

Instrument	Panametrics / Epoch III
Serial No.	00409506

	Axial dB	Circ dB
Reference	73.5	N/A
Scanning	73.5	N/A
Reject	0%	
Frequency	BROADBAND	
Mode	DUAL	
Damping	400 OHMS	

Search Unit

Transducer Mfg.	KBA 4-8-01
Serial Number	E12369/E12365 8
Model No.	ALPHA
Size / No.	1.0" Shape Round
Frequency/Mode	1.0 / Long.
"A" Dimension	1.1"
Nom Angle	45°
Meas Angle	43°
Cable Type / No. Conn.	RG174/0
Cable Length	6'

Calibration Block

Cal. Blk. No.	ALA/APR-33
Thickness	2.487"
Cal. Temp	75 °F
Cal. In	7:40
Cal. Chk.	10:36
Cal. Out	12:03
Ref. Blk. No.	LMT-048
Reflector/dB	2" RAD./55
Amp/Sweep	80 % / 4.0

Axial Scan Calibration

Cal. Refl.	Signal Amp.	Sweep Div.	Wmax
1/4T	60	1.7	0.8"
1/2T	80	3.5	1.6"
3/4T	65	4.8	1.9"
ID notch	50	6.6	2.6"

Circ Scan Calibration

Cal. Refl.	Signal Amp.	Sweep Div.	Wmax
N/A			

Calibration Remarks:

TAPERED CONFIGURATION PREVENTED CIRC SCAN FROM REACHING CODE VOLUME ON THE ELBOW SIDE.

Comp Temp. 72 °F **Configuration -** ELBOW TO SAFE END **Wo Loc.** BOTTOM OF TAPER **Lo Loc.** ELBOW EXTRADOS

Scan Dir.	Results NI	NRI	RI	Ind No.	% DAC	Length L1	Lmax	L2	Reference Measurement W1	Wmax	W2	Sweep Position S1	Smax	S2	Thickness 1"<--	C/L	-->1"	Notes:
5	○	●	○															NOTE 1

Examination/Limitation Remarks: NOTE 1- LOW LEVEL ID GEOMETRY NOTED 360 DEGREE INTERMITTENT. SCANNED AT REFERENCE GAIN DUE TO NOISE LEVEL IN COMPONENT.
*COMBINED COVERAGE FROM ALL SCANS. JGL 4-8-01

Total Length of Weld	Crown Width	Total Length of Weld Examined	Extent of Perpendicular Scans (W)	Extent of Parallel Scans (L)
115	2"	5 (L) 115 2 (L) N/A 7 and 8 (W) 0	5- From 1.1 to 2.6 2- From N/A to N/A	From (5) 0 to (2) 0

Primary Examiner	Level	Initials	Assistant Examiner	Level	Initials	Non-Technical Review	Date
Jerry W. Newgard	II	JN	N/A	N/A		[signature]	04-08-01

SNC NDE Level II/III Review	Date	Percentage of Code Coverage *	ANII Review	Date
[signature] L-III	4-8-01	71.25	[signature]	4/12/01

Revision 4

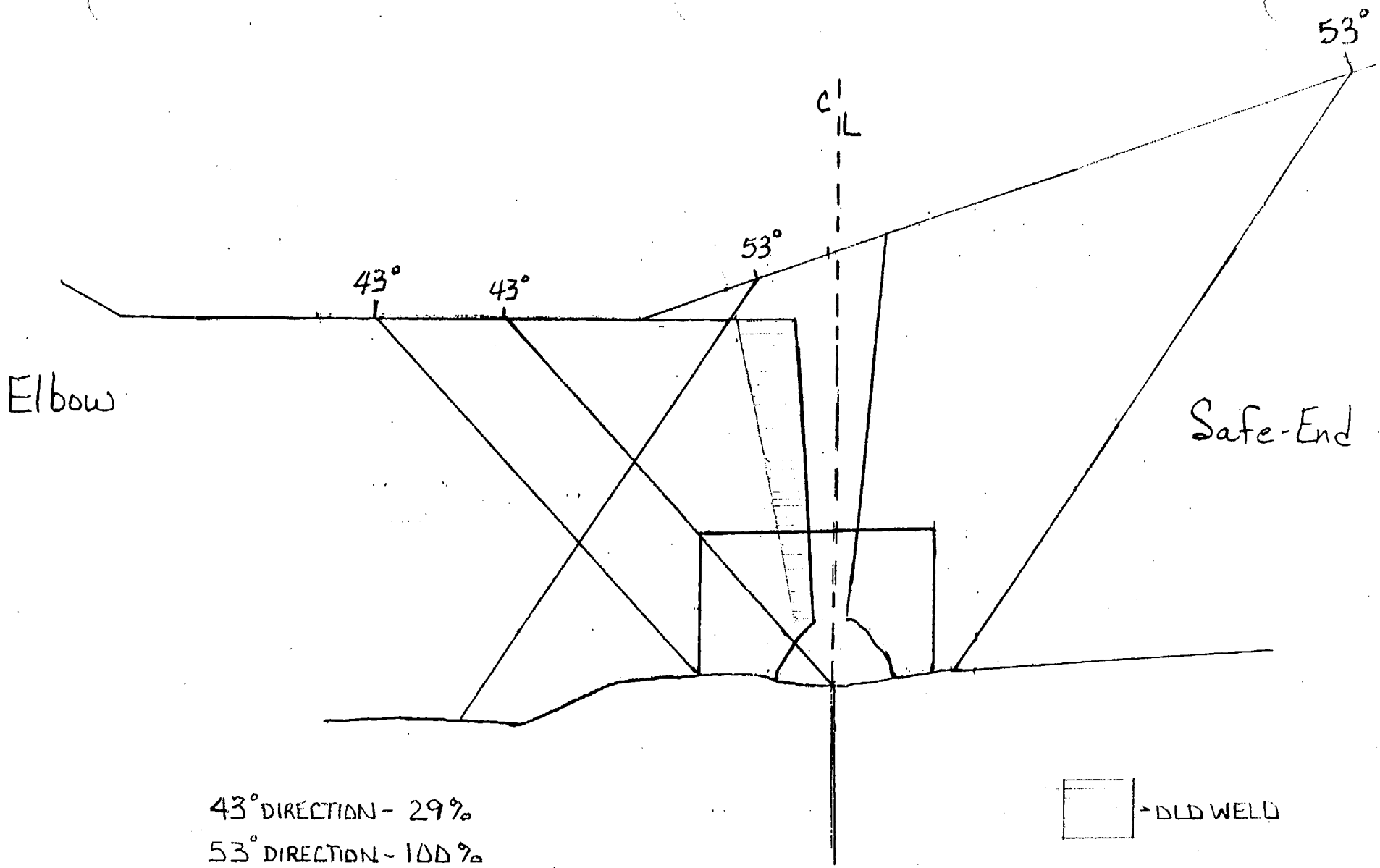

43° DIRECTION - 29%
53° DIRECTION - 100%
TOTAL AXIAL - 64.5% QEW 48-01

TYPICAL AXIAL CODE COVERAGE

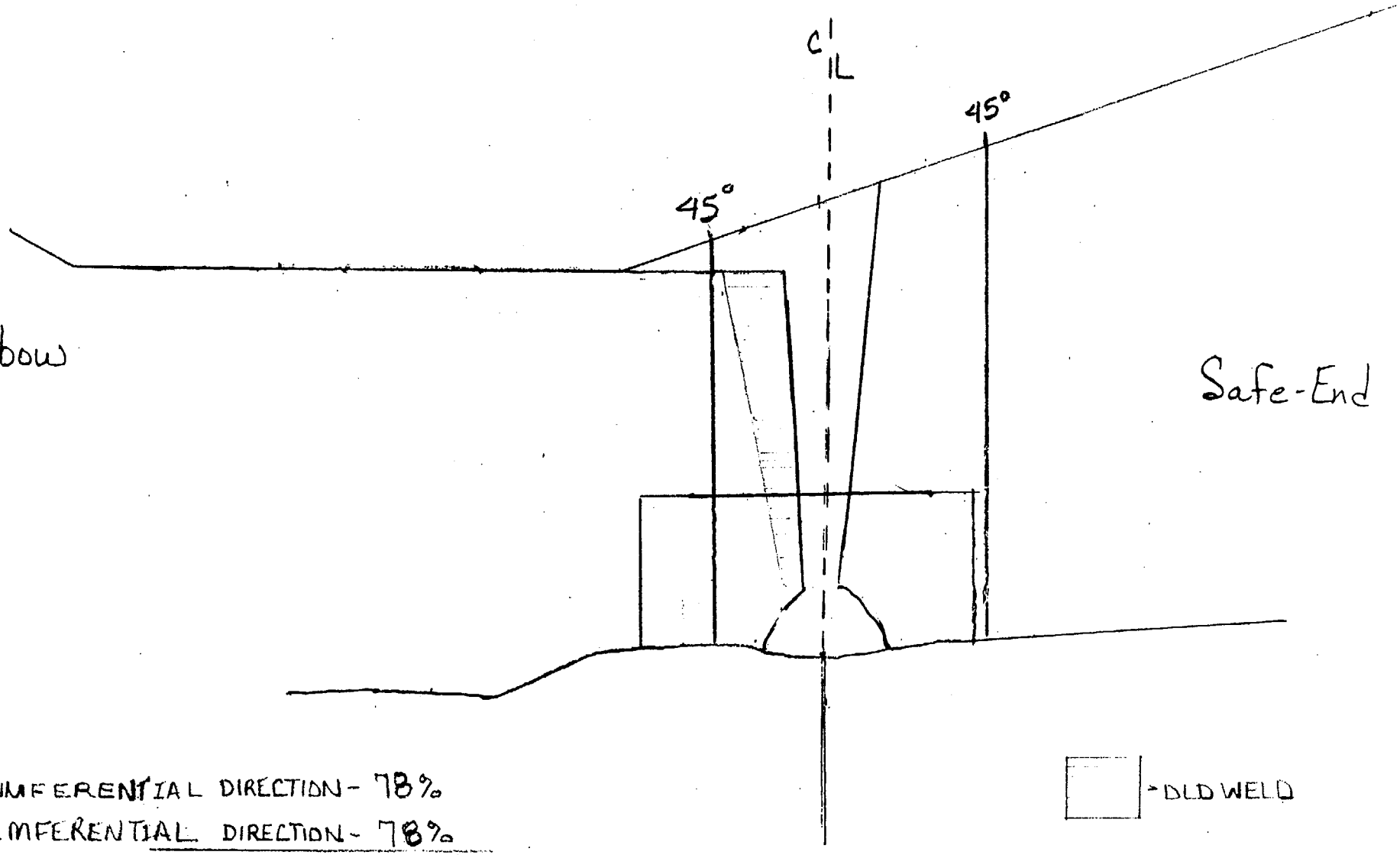

7 CIRCUMFERENTIAL DIRECTION - 78%
8 CIRCUMFERENTIAL DIRECTION - 78%
TOTAL - 78 % 4EW 4-8-01

TYPICAL CIRC CODE COVERAGE

SH RED

Farley Nucle Plant
Ultrasonic Calibration and Examination Record

FNP-0-NDE-100.41
Southern Nuclear Operating Company

Unit	Sketch/Component Number	Date	Sheet No.
2	APR1-4200-4R	4/3/01	S01F2U066 Page 1 of 1

Procedure/Rev./TCN	Couplant/Batch No.	ThermometerSN/Cal Due Date	Linearity Sheet No.
FNP-0-NDE-100.41 / 4 / N/A	Ultragel II / 00125	FNP-EDT-9003 10-11-02	S01F2L007

Instrument

Instrument	Panametrics / Epoch IIB	
Serial No.	92042604	
	Axial dB	Circ dB
Reference	73.0	NA
Scanning	73.0	NA
Reject	0%	
Frequency	2.25 MHz	
Mode	DUAL	
Damping	400 OHMS	

Search Unit

Transducer Mfg.	KBA
Serial Number	M18125/A21144
Model No.	113-261-600
Size / No.	1.0"/2 Shape Round
Frequency/Mode	1.0 / Long.
"A" Dimension	0.9"
Nom Angle	53
Meas Angle	35°
Cable Type / No. Conn.	RG174/0
Cable Length	6'

Calibration Block

Cal. Blk. No.	ALA-61
Thickness	3"
Cal. Temp	75 °F
Cal. In	7:50
Cal. Chk.	08:54
Cal. Out	11:50
Ref. Blk. No.	LMT-048
Reflector/dB	1"RAD/53
Amp/Sweep	70 % / 1.6

Axial Scan Calibration				Circ Scan Calibration			
Cal. Refl.	Signal Amp.	Sweep Div.	Wmax	Cal. Refl.	Signal Amp.	Sweep Div.	Wmax
ID NOTCH	90%	6.0	2.1	N/A			

Calibration Remarks:

Comp Temp. 75 °F Configuration - ELBOW TO SAFE END Wo Loc. TRANSITION AT ELBOW Lo Loc. ELBOW EXTRADOS

Scan Dir.	Results NI	NRI	RI	Ind No.	% DAC	Length L1	Lmax	L2	Reference Measurement W1	Wmax	W2	Sweep Position S1	Smax	S2	Thickness 1"<--	C/L	-->1"	Notes:
2	○	◉	○	NA														(1)

Examination/Limitation Remarks: EXAMINATION PERFORMED AT REFERENCE dB DUE TO EXCESSIVE NOISE. (1) SHEAR COMPONENT REDIRECTED, OBSERVED 360 DEGREES.
*COMBINED COVERAGE FROM ALL SCANS. JGA 4-8-01

Total Length of Weld	Crown Width	Total Length of Weld Examined	Extent of Perpendicular Scans (W)	Extent of Parallel Scans (L)
115	2.0"	5 (L) NA 2 (L) 115 7 and 8 (W) NA	5- From NA to NA 2- From 5.7 to 0.9	From (5) NA to (2) NA

Primary Examiner	Level	Initials	Assistant Examiner	Level	Initials	Non-Technical Review	Date
Robert G. Auer	II	RGA	N/A	N/A		Paul Sullivan	04-08-01

SNC NDE Level II/III Review	Date	Percentage of Code Coverage	ANII Review	Date
J. Eric Alycock L-III	4-8-01	* 71.25	C G Ward	4/12/01

Revision 4

SH RED

Farley Nucle. Plant
Ultrasonic Calibration and Examination Record

FNP-0-NDE-100.41
Southern Nuclear Operating Company

Unit	Sketch/Component Number	Date	Sheet No.
2	APR1-4200-4R	04/03/01	S01F2U067 Page 1 of 1

Procedure/Rev./TCN	Couplant/Batch No.	ThermometerSN/Cal Due Date	Linearity Sheet No.
FNP-0-NDE-100.41 / 4 / N/A	Ultragel II / 00125	FNP-EDT-9003 / 10-11-02	S01F2L007

Instrument

Instrument	Panametrics / Epoch IIB	
Serial No.	92042604	
	Axial dB	Circ dB
Reference	NA	72.0
Scanning	NA	78.0
Reject	0%	
Frequency	2.25 MHz	
Mode	DUAL	
Damping	400 OHMS	

Search Unit

Transducer Mfg.	KBA
Serial Number	M06171/M06172
Model No.	113-262-600
Size / No.	1.0" Shape Round
Frequency/Mode	2.25 / Long.
"A" Dimension	1.0"
Nom Angle	45°
Meas Angle	47°
Cable Type / No. Conn.	RG174/0
Cable Length	6'

Calibration Block

Cal. Blk. No.	ALA-61
Thickness	3"
Cal. Temp	75 °F
Cal. In	7:59
Cal. Chk.	10:21
Cal. Out	12:00
Ref. Blk. No.	18 deg shoe
Reflector/dB	NA/63.0
Amp/Sweep	80 % / 2.5

Axial Scan Calibration

Cal. Refl.	Signal Amp.	Sweep Div.	Wmax
NA			

Circ Scan Calibration

Cal. Refl.	Signal Amp.	Sweep Div.	Wmax
ID notch	80%	7.7	5.2

Calibration Remarks:

SINCE WEDGES HAVE 18 DEGREE TILT, CAL CHECK WAS PERFORMED BY COUPLING TO OPPOSITE DIRECTION WEDGE.

Comp Temp. 75 °F **Configuration -** ELBOW TO SAFE END **Wo Loc.** TRANSITION AT ELBOW **Lo Loc.** ELBOW EXTRADOS

Scan Dir.	Results NI	NRI	RI	Ind No.	% DAC	Length L1	Lmax	L2	Reference Measurement W1	Wmax	W2	Sweep Position S1	Smax	S2	Thickness 1"<--	C/L	-->1"	Notes:
7	○	◉	○	NA														

Examination/Limitation Remarks: 18° RIGHT TILT WEDGE.

* COMBINED COVERAGE FROM ALL SCANS. JEH 4-8-01

Total Length of Weld	Crown Width	Total Length of Weld Examined	Extent of Perpendicular Scans (W)	Extent of Parallel Scans (L)
115	2.0	5 (L) NA 2 (L) NA 7 and 8 (W) 115	5- From NA to NA 2- From NA to NA	From (5) +0.8 to (2) NL

Primary Examiner	Level	Initials	Assistant Examiner	Level	Initials	Non-Technical Review	Date
Robert G. Auer	II	RGA	N/A	N/A		Paul Hilbano	04-08-01

SNC NDE Level II/III Review	Date	Percentage of Code Coverage *	ANII Review	Date
J. Eric Aycock S-III	4-8-01	71.25	C G Wood	4/12/01

Revision 4

SH RED

Farley Nucle. Plant
Ultrasonic Calibration and Examination Record

FNP-0-NDE-100.41
Southern Nuclear Operating Company

Unit	Sketch/Component Number	Date	Sheet No.
2	APR1-4200-4R	04/03/01	S01F2U068 Page 1 of 1

Procedure/Rev./TCN	Couplant/Batch No.	ThermometerSN/Cal Due Date	Linearity Sheet No.
FNP-0-NDE-100.41 / 4 / N/A	Ultragel II / 00125	FNP-EDT-9003 / 10-11-02	S01F2L007

Instrument

Instrument	Panametrics / Epoch IIB	
Serial No.	92042604	
	Axial dB	Circ dB
Reference	NA	74.0
Scanning	NA	80.0
Reject	0%	
Frequency	2.25 MHz	
Mode	DUAL	
Damping	400 OHMS	

Search Unit

Transducer Mfg.	KBA
Serial Number	00MBN6/00MBN7
Model No.	113-262-600
Size / No.	1.0" Shape Round
Frequency/Mode	2.25 / Long.
"A" Dimension	1.0"
Nom Angle	45°
Meas Angle	47°
Cable Type / No. Conn.	RG174/0
Cable Length	6'

Calibration Block

Cal. Blk. No.	ALA-61
Thickness	3"
Cal. Temp	75 °F
Cal. In	7:56
Cal. Chk.	09:58
Cal. Out	11:55
Ref. Blk. No.	18 deg shoe
Reflector/dB	NA/74.0
Amp/Sweep	80 % / 2.4

Axial Scan Calibration				Circ Scan Calibration			
Cal. Refl.	Signal Amp.	Sweep Div.	Wmax	Cal. Refl.	Signal Amp.	Sweep Div.	Wmax
NA				ID notch	80%	7.0	4.8

Calibration Remarks:

SINCE WEDGES HAVE 18 DEGREE TILT, CAL CHECK WAS PERFORMED BY COUPLING TO OPPOSITE DIRECTION WEDGE.

Comp Temp. 75 °F **Configuration -** ELBOW TO SAFE END **Wo Loc.** TRANSITION AT ELBOW **Lo Loc.** ELBOW EXTRADOS

Scan Dir.	Results NI	NRI	RI	Ind No.	% DAC	Length L1	Lmax	L2	Reference Measurement W1	Wmax	W2	Sweep Position S1	Smax	S2	Thickness 1"<--	C/L	-->1"	Notes:
8	○	●	○	NA														

Examination/Limitation Remarks: 18° LEFT TILT WEDGE.

* COMBINED COVERAGE FROM ALL SCANS. JEA 4-8-01

Total Length of Weld	Crown Width	Total Length of Weld Examined	Extent of Perpendicular Scans (W)	Extent of Parallel Scans (L)
115	2.0	5 (L) NA 2 (L) NA 7 and 8 (W) 115	5- From NA to NA 2- From NA to NA	From (5) +0.8 to (2) NL

Primary Examiner	Level	Initials	Assistant Examiner	Level	Initials	Non-Technical Review	Date
Robert G. Auer	II	RGA	N/A	N/A		Paul Schlueter	04-08-01

SNC NDE Level II/III Review	Date	Percentage of Code Coverage *	ANII Review	Date
J. Eric Alycock L-III	4-8-01	71.25	C G Wood	4/12/01

Revision 4

BECHTEL

WP& IR #	NONDESTRUCTIVE EXAMINATION REPORT LIQUID PENETRANT EXAMINATION		REPORT NUMBER
P-RCB-259			PT- 01 - 151
ISO # / DWG # / FSK #	JOB NAME	JOB NUMBER	DATE
FSK-M-267	Farley Unit 2 SGRP	23734	03-31-01

COMPONENT CONFIGURATION	TIME OF EXAM	PROCEDURE / REV
HOT-LEG ELBOW TO SAFE-END ~~PIPE TO NOZZLE~~ AW 4/12/01	☑ N/A ☐ PRE-PWHT ☐ POST-PWHT	PT (SR)-ASME III/XI R/ 2

CODE / WELD CLASS	SURFACE CONDITION	PIPE DIA	MATL TYPE	COMPONENT TEMP
ASME ~~IX~~ / NB ~~XI~~ EGB 3/31/01	☑ GROUND ☐ AS WELDED	31"	☐ C/S ☑ S/S ☐ D/M	66 °F PENET TEMP 65 °F

CLEANER / REMOVER	PENETRANT	DEVELOPER
MFR. MAGNUFLUX	MFR. MAGNUFLUX	MFR. MAGNUFLUX
TYPE SKC-S	TYPE SKL-SP	TYPE SKD-S2
BATCH # 00E04K	BATCH # 99L08K	BATCH # 00G07K

DEFECT CODE: C - CRACKS R - ROUNDED INDICATIONS L - LINEAR INDICATION

PART OR WELD NUMBER	DISPOSITION ACC	DISPOSITION REJ	DEFECT CODE	REMARKS
FW-1-SG (ID & OD)	✓			"NO INDICATIONS"
ISI WELD # ADR.1-4200-4R Qeb 4-9-01				- HOT-LEG -

SKETCH / COMMENTS: FINAL PT AFTER ISI GRIND, ID & OD

Final

M&TE I.D. # 198057 CAL.DUE 07-25-01	EXAMINER	LEVEL	DATE
	B Gough S Hoffman	Joe Alonzo II	03-31-01
NOTES:	REVIEWER	LEVEL	DATE
	E. Bryant	III	3/31/01

SNC Review - J. Eric Laycock S-III 4-9-01
ANII Review: C G Wand 4/12/01

AN II
3-31-01

SHE ED

Farley Nuclea. ant
Ultrasonic Calibration and Examination Record

FNP-0-N. -100.41
Southern Nuclear Operating Company

Unit	Sketch/Component Number	Date	Sheet No.
2	APR1-4200-5R	04/03/01	S01F2U089 Page 1 of 4

Procedure/Rev./TCN	Couplant/Batch No.	ThermometerSN/Cal Due Date	Linearity Sheet No.
FNP-0-NDE-100.41 / 4 / N/A	Ultragel II / 00125	FNP-EDT-9003 / 10-11-02	S01F2L001

Instrument

Instrument	Panametrics / Epoch III
Serial No.	00409506

	Axial dB	Circ dB
Reference	73.5	NA
Scanning	73.5	NA
Reject	0%	
Frequency	BROADBAND	
Mode	DUAL	
Damping	400 OHMS	

Search Unit

Transducer Mfg.	KBA qea 4-8-01
Serial Number	E12369/E12365 8
Model No.	ALPHA
Size / No.	1.0" Shape Round
Frequency/Mode	1.0 / Long.
"A" Dimension	1.1"
Nom Angle	45°
Meas Angle	43°
Cable Type / No. Conn.	RG174/0
Cable Length	6'

Calibration Block

Cal. Blk. No.	ALA/APR-33
Thickness	2.487"
Cal. Temp	75 °F
Cal. In	7:40
Cal. Chk.	08:58
Cal. Out	12:03
Ref. Blk. No.	LMT-048
Reflector/dB	2" RAD./55
Amp/Sweep	80 % / 4.0

Axial Scan Calibration

Cal. Refl.	Signal Amp.	Sweep Div.	Wmax
1/4T	60	1.7	0.8"
1/2T	80	3.5	1.6"
3/4T	65	4.8	1.9"
ID notch	50	6.6	2.6"

Circ Scan Calibration

Cal. Refl.	Signal Amp.	Sweep Div.	Wmax
NA			

Calibration Remarks:

TAPERED CONFIGURATION PREVENTED CIRC SCAN FROM REACHING CODE VOLUME ON THE ELBOW SIDE.

Comp Temp. 72 °F **Configuration -** SAFE END TO ELBOW **Wo Loc.** BOTTOM OF TAPER **Lo Loc.** ELBOW EXTRADOS

Scan Dir.	Results NI	NRI	RI	Ind No.	% DAC	Length L1	Lmax	L2	Reference Measurement W1	Wmax	W2	Sweep Position S1	Smax	S2	Thickness 1"<--	C/L	-->1"	Notes:
2	○	○	●	1	200	N/A	52.5	N/A	N/A	2.75"	N/A	N/A	3.23"	N/A	2.55"	3.00"	3.25"	NOTE 1

Examination/Limitation Remarks: NOTE 1-~~CORE BORE~~ COUNTERBORE qea 4-8-01 SEEN 360 DEGREE INTERMITTENT. SCANNED AT REFERENCE GAIN DUE TO EXCESSIVE NOISE LEVEL IN COMPONENT.
* COMBINED COVERAGE FROM ALL SCANS. qea 4-8-01 Reference IER-006 for indication evaluation. qea 4-9-01

Total Length of Weld	Crown Width	Total Length of Weld Examined	Extent of Perpendicular Scans (W)	Extent of Parallel Scans (L)
114	2"	5 (L) N/A 2 (L) 114 7 and 8 (W) 0	5- From N/A to N/A 2- From 3.2 to 1.1	From (5) 0 to (2) 0

Primary Examiner	Level	Initials	Assistant Examiner	Level	Initials	Non-Technical Review	Date
Jerry W. Newgard	II	JN	N/A	N/A		Paul Hickland	04-08-01

SNC NDE Level II/III Review	Date	Percentage of Code Coverage *	ANII Review	Date
J. Eric Aycock L-III	4-8-01	71.25	[signature]	4/12/01

Revision 4

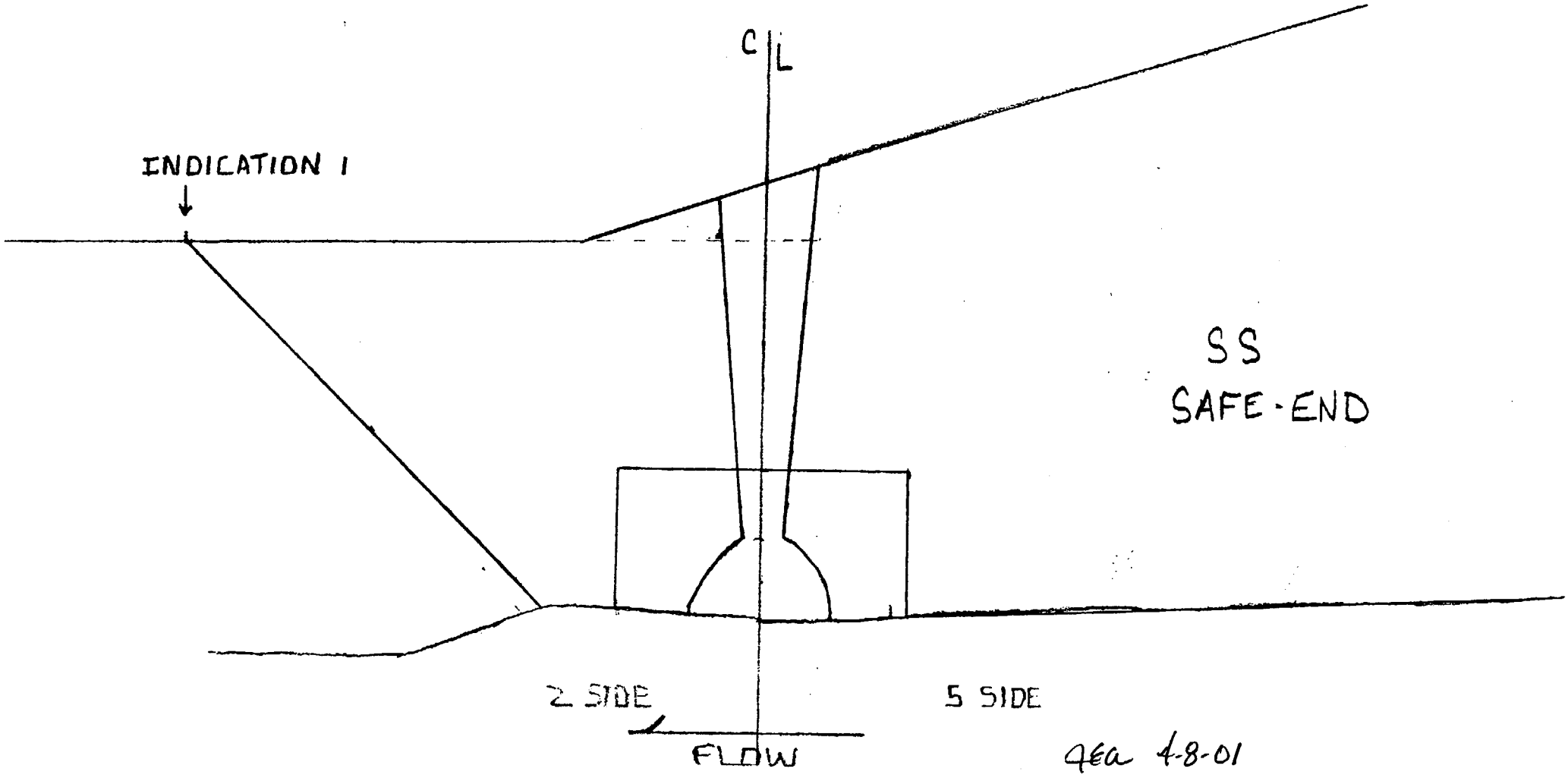

4ea 4-8-01

APR14200-5R

S01FZU089 2 of 4

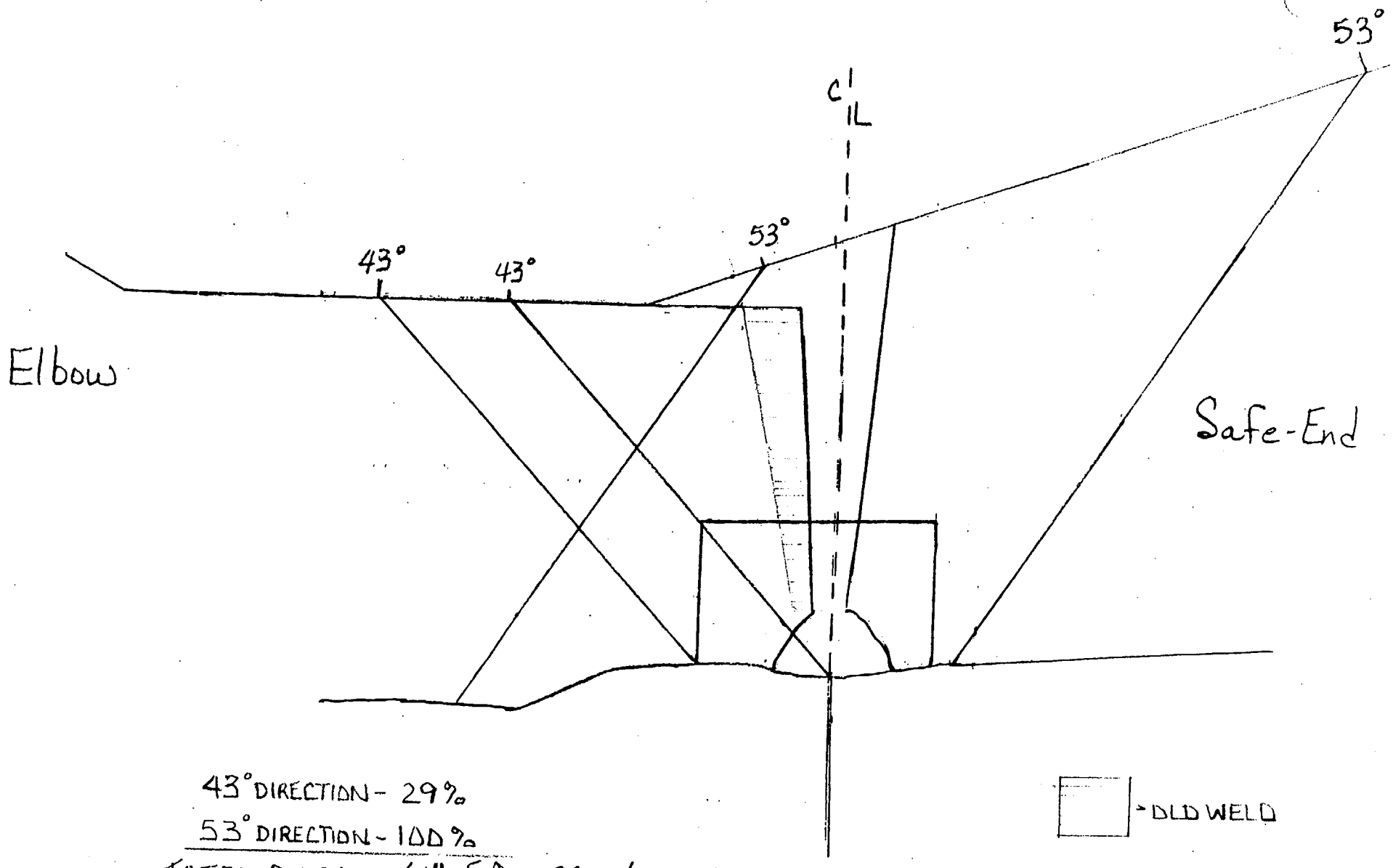

43° DIRECTION - 29%
53° DIRECTION - 100%
TOTAL AXIAL - 64.5% JEA 4-8-01

TYPICAL AXIAL CODE COVERAGE

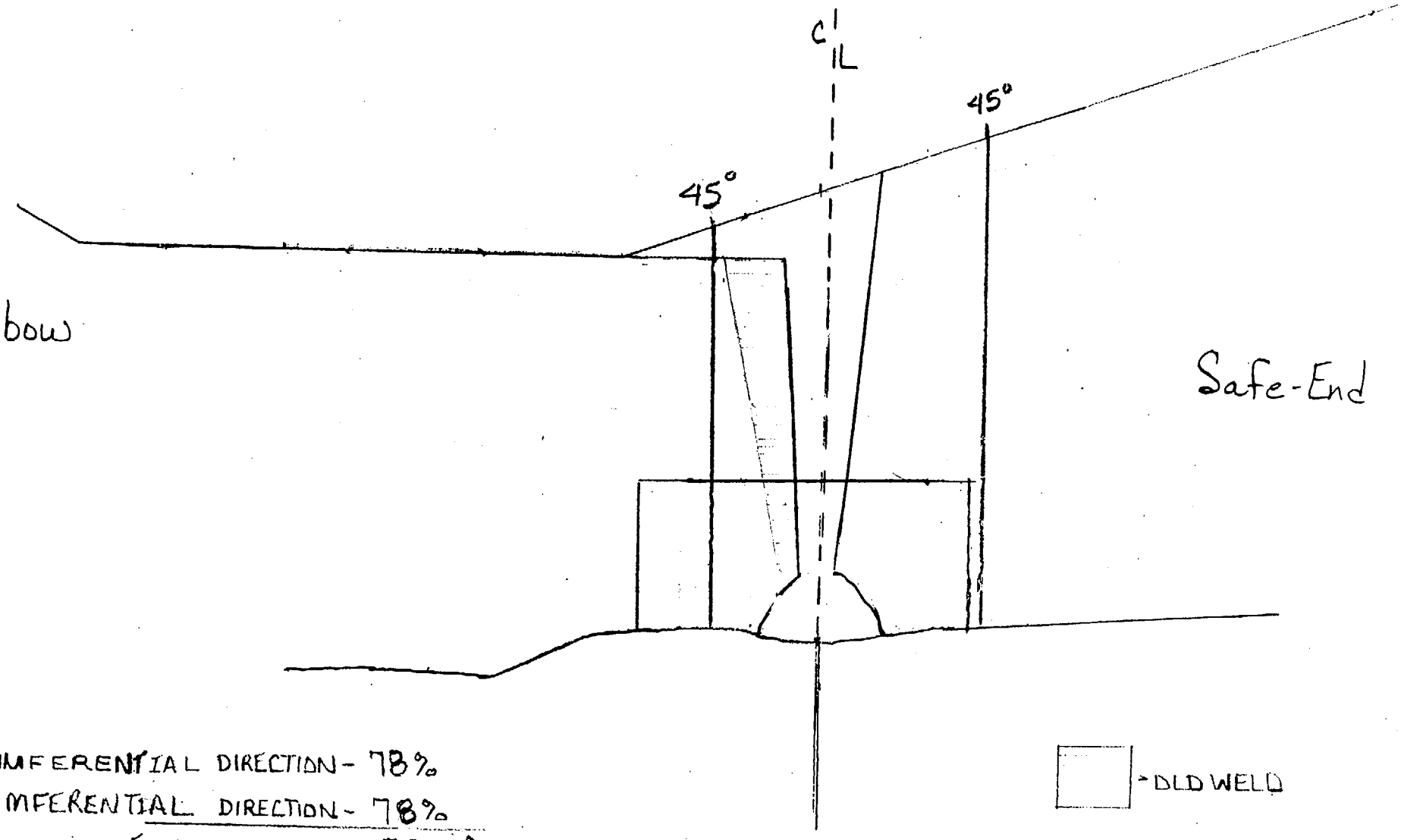

7 CIRCUMFERENTIAL DIRECTION - 78%
8 CIRCUMFERENTIAL DIRECTION - 78%
TOTAL - 78 % [illegible] 4-8-01

TYPICAL CIRC CODE COVERAGE

SHARED

Farley Nuclear Plant
Ultrasonic Calibration and Examination Record

FNP-0-NDE-100.41
Southern Nuclear Operating Company

Unit	Sketch/Component Number	Date	Sheet No.
2	APR1-4200-5R	4/3/01	S01F2U071 Page 1 of 1

Procedure/Rev./TCN	Couplant/Batch No.	ThermometerSN/Cal Due Date	Linearity Sheet No.
FNP-0-NDE-100.41 / 4 / N/A	Ultragel II / 00125	FNP-EDT-9003 / 10-11-02	S01F2L007

Instrument

Instrument	Panametrics / Epoch IIB	
Serial No.	92042604	
	Axial dB	Circ dB
Reference	73.0	NA
Scanning	73.0	NA
Reject	0%	
Frequency	2.25 MHz	
Mode	DUAL	
Damping	400 OHMS	

Search Unit

Transducer Mfg.	KBA
Serial Number	M18125/A21144
Model No.	113-261-600
Size / No.	1.0"/2 Shape Round
Frequency/Mode	1.0 / Long.
"A" Dimension	0.9"
Nom Angle	53°
Meas Angle	35°
Cable Type / No. Conn.	RG174/0
Cable Length	6'

Calibration Block

Cal. Blk. No.	ALA-61
Thickness	3"
Cal. Temp	75 °F
Cal. In	7:50
Cal. Chk.	9:30
Cal. Out	11:50
Ref. Blk. No.	LMT-048
Reflector/dB	1"RAD/53
Amp/Sweep	70 % / 1.6

Axial Scan Calibration				Circ Scan Calibration			
Cal. Refl.	Signal Amp.	Sweep Div.	Wmax	Cal. Refl.	Signal Amp.	Sweep Div.	Wmax
ID NOTCH	90%	6.0	2.1	N/A			

Calibration Remarks:

Comp Temp.	Configuration -	Wo Loc.	Lo Loc.
75 °F	SAFE END TO ELBOW	TRANSITION AT ELBOW	ELBOW EXTRADOS

Scan Dir.	Results NI	NRI	RI	Ind No.	% DAC	Length L1	Lmax	L2	Reference Measurement W1	Wmax	W2	Sweep Position S1	Smax	S2	Thickness 1"<--	C/L	-->1"	Notes:
5	○	●	○	NA														(1)

Examination/Limitation Remarks: EXAMINATION PERFORMED AT REFERENCE dB DUE TO EXCESSIVE NOISE. (1) SHEAR COMPONENT REDIRECTED, OBSERVED 360 DEGREES.
* COMBINED COVERAGE FROM ALL SCANS. [illegible] 4-8-01

Total Length of Weld	Crown Width	Total Length of Weld Examined	Extent of Perpendicular Scans (W)	Extent of Parallel Scans (L)
114	2.0"	5 (L) 114 2 (L) NA 7 and 8 (W) NA	5- From 0.9 to 4.6 2- From NA to NA	From (5) NA to (2) NA

Primary Examiner	Level	Initials	Assistant Examiner	Level	Initials	Non-Technical Review	Date
Robert G. Auer	II	RGA	N/A	N/A		[illegible]	04-08-01

SNC NDE Level II/III Review	Date	Percentage of Code Coverage *	ANII Review	Date
J. Eric Aycock L-III	4-8-01	71.25	[illegible]	4/12/01

Revision 4

SH(3ED

Farley Nucle. Plant
Ultrasonic Calibration and Examination Record

FNP-0-N.E-100.41
Southern Nuclear Operating Company

Unit	Sketch/Component Number	Date	Sheet No.
2	APR1-4200-5R	4/3/01	S01F2U069 Page 1 of 1

Procedure/Rev./TCN	Couplant/Batch No.	ThermometerSN/Cal Due Date	Linearity Sheet No.
FNP-0-NDE-100.41 / 4 / N/A	Ultragel II / 00125	FNP-EDT-9003 / 10-11-02	S01F2L007

Instrument

Instrument	Panametrics / Epoch IIB
Serial No.	92042604

	Axial dB	Circ dB
Reference	NA	74.0
Scanning	NA	80.0
Reject	0%	
Frequency	2.25 MHz	
Mode	DUAL	
Damping	400 OHMS	

Search Unit

Transducer Mfg.	KBA
Serial Number	00MBN6/00MBN7
Model No.	113-262-600
Size / No.	1.0" Shape Round
Frequency/Mode	2.25 / Long.
"A" Dimension	1.0"
Nom Angle	45°
Meas Angle	47°
Cable Type / No. Conn.	RG174 / 0
Cable Length	6'

Calibration Block

Cal. Blk. No.	ALA-61
Thickness	3"
Cal. Temp	75 °F
Cal. In	7:56
Cal. Chk.	10:55
Cal. Out	11:55
Ref. Blk. No.	18 deg shoe
Reflector/dB	NA/74.0
Amp/Sweep	80 % / 2.4

Axial Scan Calibration				Circ Scan Calibration			
Cal. Refl.	Signal Amp.	Sweep Div.	Wmax	Cal. Refl.	Signal Amp.	Sweep Div.	Wmax
NA				ID notch	80%	7.0	4.8

Calibration Remarks:

SINCE WEDGES HAVE 18 DEGREE TILT, CAL CHECK WAS PERFORMED BY COUPLING TO OPPOSITE DIRECTION WEDGE.

Comp Temp. 72 °F **Configuration -** SAFE END TO ELBOW **Wo Loc.** TRANSITION AT ELBOW **Lo Loc.** ELBOW EXTRADOS

Scan Dir.	Results NI	NRI	RI	Ind No.	% DAC	Length L1	Lmax	L2	Reference Measurement W1	Wmax	W2	Sweep Position S1	Smax	S2	Thickness 1"<--	C/L	-->1"	Notes:
7	○	●	○	NA														

Examination/Limitation Remarks: NA

* COMBINED COVERAGE FROM ALL SCANS. JEW 4-8-01

Total Length of Weld	Crown Width	Total Length of Weld Examined	Extent of Perpendicular Scans (W)	Extent of Parallel Scans (L)
114	2.0"	5 (L) NA 2 (L) NA 7 and 8 (W) 114	5- From NA to NA 2- From NA to NA	From (5) NL to (2) -.8

Primary Examiner	Level	Initials	Assistant Examiner	Level	Initials	Non-Technical Review	Date
Robert G. Auer	II	RGA	N/ A	N/A		Paul Hulslum	04-08-01

SNC NDE Level II/III Review	Date	Percentage of Code Coverage *	ANII Review	Date
J. Eric Aycock L-III	4-8-01	71.25	C G Wood	4/12/01

Revision 4

SH[illegible]ED

Farley Nuclear Plant
Ultrasonic Calibration and Examination Record

FNP-0-NDE-100.41
Southern Nuclear Operating Company

Unit	Sketch/Component Number	Date	Sheet No.
2	APR1-4200-5R	4/3/01	S01F2U070 Page 1 of 1

Procedure/Rev./TCN	Couplant/Batch No.	ThermometerSN/Cal Due Date	Linearity Sheet No.
FNP-0-NDE-100.41 / 4 / N/A	Ultragel II / 00125	FNP-EDT-9003 / 10-11-02	S01F2L007

Instrument

Instrument	Panametrics / Epoch IIB
Serial No.	92042604

	Axial dB	Circ dB
Reference	NA	72.0
Scanning	NA	78.0
Reject	0%	
Frequency	2.25 MHz	
Mode	DUAL	
Damping	400 OHMS	

Search Unit

Transducer Mfg.	KBA
Serial Number	M06171/M06172
Model No.	113-262-600
Size / No.	1.0" Shape Round
Frequency/Mode	2.25 / Long.
"A" Dimension	1.0"
Nom Angle	45°
Meas Angle	47°
Cable Type / No. Conn.	RG174/0
Cable Length	6'

Calibration Block

Cal. Blk. No.	ALA-61
Thickness	3"
Cal. Temp	75 °F
Cal. In	7:59
Cal. Chk.	11:20
Cal. Out	12:00
Ref. Blk. No.	18 deg shoe
Reflector/dB	NA/63.0
Amp/Sweep	80 % / 2.5

Axial Scan Calibration				Circ Scan Calibration			
Cal. Refl.	Signal Amp.	Sweep Div.	Wmax	Cal. Refl.	Signal Amp.	Sweep Div.	Wmax
NA				ID notch	80%	7.7	5.2

Calibration Remarks:

SINCE WEDGES HAVE 18 DEGREE TILT, CAL CHECK WAS PERFORMED BY COUPLING TO OPPOSITE DIRECTION WEDGE.

Comp Temp.	Configuration -	Wo Loc.	Lo Loc.
72 °F	SAFE END TO ELBOW	TRANSITION AT ELBOW	ELBOW EXTRADOS

Scan Dir.	Results NI	NRI	RI	Ind No.	% DAC	Length L1	Lmax	L2	Reference Measurement W1	Wmax	W2	Sweep Position S1	Smax	S2	Thickness 1"<--	C/L	-->1"	Notes:
8	○	●	○	NA														

Examination/Limitation Remarks: NA

* COMBINED COVERAGE FROM ALL SCANS. [illegible] 4-8-01

Total Length of Weld	Crown Width	Total Length of Weld Examined	Extent of Perpendicular Scans (W)	Extent of Parallel Scans (L)
114	2.0"	5 (L) NA 2 (L) NA 7 and 8 (W) 114	5- From NA to NA 2- From NA to NA	From (5) NL to (2) -.8

Primary Examiner	Level	Initials	Assistant Examiner	Level	Initials	Non-Technical Review	Date
Robert G. Auer	II	RGA	N/ A	N/A		[illegible]	04-08-01

SNC NDE Level II/III Review	Date	Percentage of Code Coverage *	ANII Review	Date
[illegible] S-III	4-8-01	71.25	[illegible]	4/12/01

Revision 4

WP& IR #	NONDESTRUCTIVE EXAMINATION REPORT LIQUID PENETRANT EXAMINATION		REPORT NUMBER
P-RCB-259			PT- 01 - 153
ISO # / DWG # / FSK #	JOB NAME	JOB NUMBER	DATE
FSK-M-267	Farley Unit 2 SGRP	23734	03-31-01

COMPONENT CONFIGURATION	TIME OF EXAM	PROCEDURE / REV
SAFE-END TO ELBOW ~~NOZZLE TO PIPE~~	☑ N/A ☐ PRE-PWHT ☐ POST-PWHT	PT (SR)-ASME III/XI R/ 2

CODE / WELD CLASS	SURFACE CONDITION	PIPE DIA	MATL TYPE	COMPONENT TEMP
ASME ~~IX~~ XI / NB EGB 3/31/01	☑ GROUND ☐ AS WELDED	31"	☐ C/S ☑ S/S ☐ D/M	66 °F PENET TEMP 65 °F

CLEANER / REMOVER	PENETRANT	DEVELOPER
MFR. MAGNUFLUX	MFR. MAGNUFLUX	MFR. MAGNUFLUX
TYPE SKC-S	TYPE SKL-SP	TYPE SKD-S2
BATCH # 00E04K	BATCH # 99L08K	BATCH # 00G07K

DEFECT CODE: C - CRACKS R - ROUNDED INDICATIONS L - LINEAR INDICATION

PART OR WELD NUMBER	DISPOSITION ACC	DISPOSITION REJ	DEFECT CODE	REMARKS
FW-2-SG	✓			NO-INDICATIONS
(ID & OD)				
[ISI WELD #				"COLD-LEG"
APR1-4200-5R				
QEW 4-9-01]				

SKETCH / COMMENTS: FINAL PT AFTER ISI GRIND, ID & OD

FINAL

M&TE I.D. #	CAL.DUE	EXAMINER	LEVEL	DATE
198057	07-25-01	D. Gough S. Hoffman Joe Alonzo	II	03-31-01

NOTES:	REVIEWER	LEVEL	DATE
	P. Bryan	III	3/31/01

SWC REVIEW - J. Eric Aycock L-III 4-9-01
ANII review: EG Wood 4/12/01

ANII
3-31-01

SH RED

Farley Nuclear Plant
Ultrasonic Calibration and Examination Record

FNP-0-N .-100.41
Southern Nuclear Operating Company

Unit	Sketch/Component Number	Date	Sheet No.
2	APR1-4300-4R	04/04/01	S01F2U085 Page 1 of 4

Procedure/Rev./TCN	Couplant/Batch No.	ThermometerSN/Cal Due Date	Linearity Sheet No.
FNP-0-NDE-100.41 / 4 / N/A	Ultragel II / 00125	FNP-EDT-9003 / 10-11-02	S01F2L001

Instrument

Instrument	Panametrics / Epoch III
Serial No.	00409506

	Axial dB	Circ dB
Reference	71	NA
Scanning	71	NA
Reject	0%	
Frequency	BROADBAND	
Mode	DUAL	
Damping	400 OHMS	

Search Unit

Transducer Mfg.	KBA
Serial Number	E12369/E12365 (8)
Model No.	ALPHA
Size / No.	1.0" Shape Round
Frequency/Mode	1.0 / Long.
"A" Dimension	1"
Nom Angle	45°
Meas Angle	43°
Cable Type / No. Conn.	RG174/0
Cable Length	6'

Calibration Block

Cal. Blk. No.	ALA/APR-33
Thickness	2.487"
Cal. Temp	75 °F
Cal. In	7:30
Cal. Chk.	09:12
Cal. Out	17:15
Ref. Blk. No.	LMT-048
Reflector/dB	2" RAD./55
Amp/Sweep	80 % / 4.0

Axial Scan Calibration				Circ Scan Calibration			
Cal. Refl.	Signal Amp.	Sweep Div.	Wmax	Cal. Refl.	Signal Amp.	Sweep Div.	Wmax
1/4T	60	1.7	0.8"	NA			
1/2T	80	3.5	1.6"				
3/4T	65	4.8	1.9"				
ID notch	50	6.6	2.6"				

Calibration Remarks:

TAPERED CONFIGURATION PREVENTED CIRC SCAN FROM REACHING CODE VOLUME ON THE ELBOW SIDE.

Comp Temp. 73 °F **Configuration -** ELBOW TO SAFE END **Wo Loc.** BOTTOM OF TAPER **Lo Loc.** ELBOW EXTRADOS

Scan Dir.	Results NI	NRI	RI	Ind No.	% DAC	Length L1	Lmax	L2	Reference Measurement W1	Wmax	W2	Sweep Position S1	Smax	S2	Thickness 1"<--	C/L	-->1"	Notes:
5	○	○	●	1	150	N/A	42.5"	N/A	N/A	2.3"	N/A	N/A	3.2"	N/A	2.75"	3.1"	3.4"	NOTE 1

Examination/Limitation Remarks: NOTE 1- COUNTERBORE SEEN 360 DEGREE INTERMITTMENT. SCANNED AT REFERENCE GAIN DUE TO EXCESSIVE NOISE LEVEL IN COMPONENT.
*COMBINED COVERAGE FROM ALL SCANS. QEA 4-8-01 Reference IER-002 for indication evaluation. QEA 4-9-01

Total Length of Weld	Crown Width	Total Length of Weld Examined	Extent of Perpendicular Scans (W)	Extent of Parallel Scans (L)
115	2"	5 (L) 115 2 (L) N/A 7 and 8 (W) 0	5- From 2.9 to 1.0 2- From N/A to N/A	From (5) 0 to (2) 0

Primary Examiner	Level	Initials	Assistant Examiner	Level	Initials	Non-Technical Review	Date
Jerry W. Newgard	II	JN	N/A	N/A		[signature]	04-08-01

SNC NDE Level II/III Review	Date	Percentage of Code Coverage	ANII Review	Date
[signature] L-III	4-8-01	* 71.25	[signature]	4/12/01

Revision 4

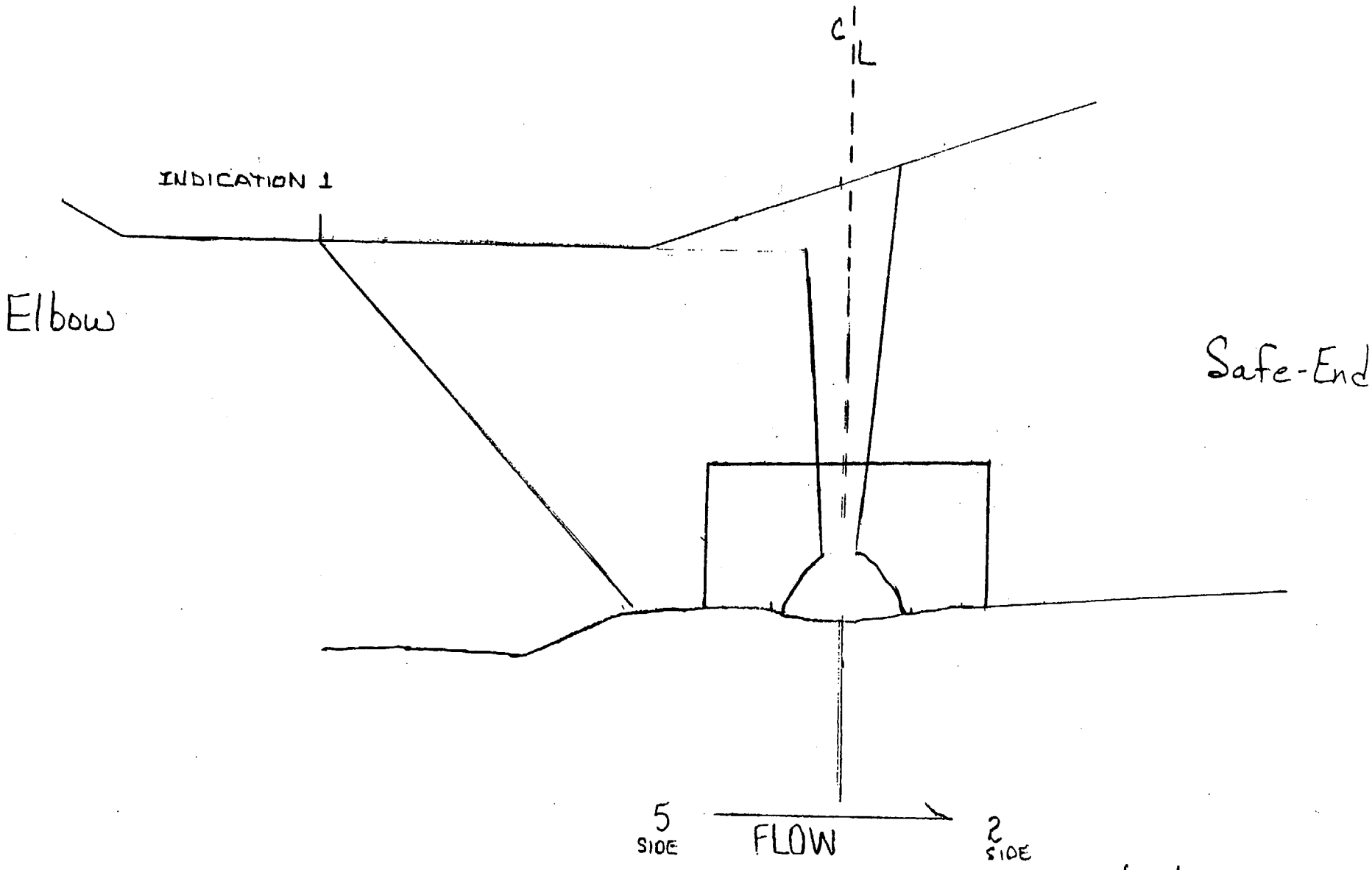

APR1-430D-4R

4EW 4-8-01

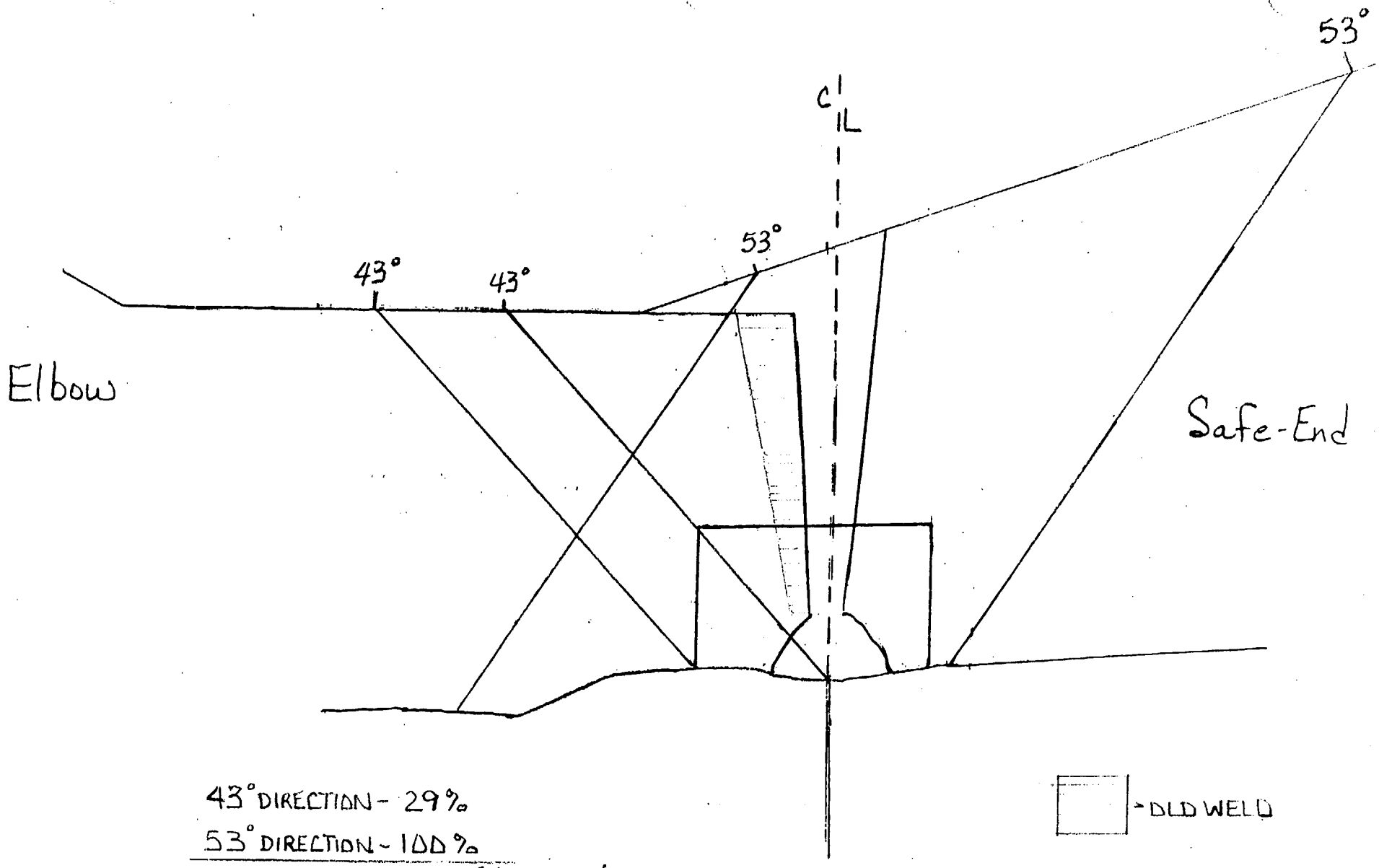

43° DIRECTION - 29%

53° DIRECTION - 100%

TOTAL AXIAL - 64.5% QEW 4-8-01

TYPICAL AXIAL CODE COVERAGE

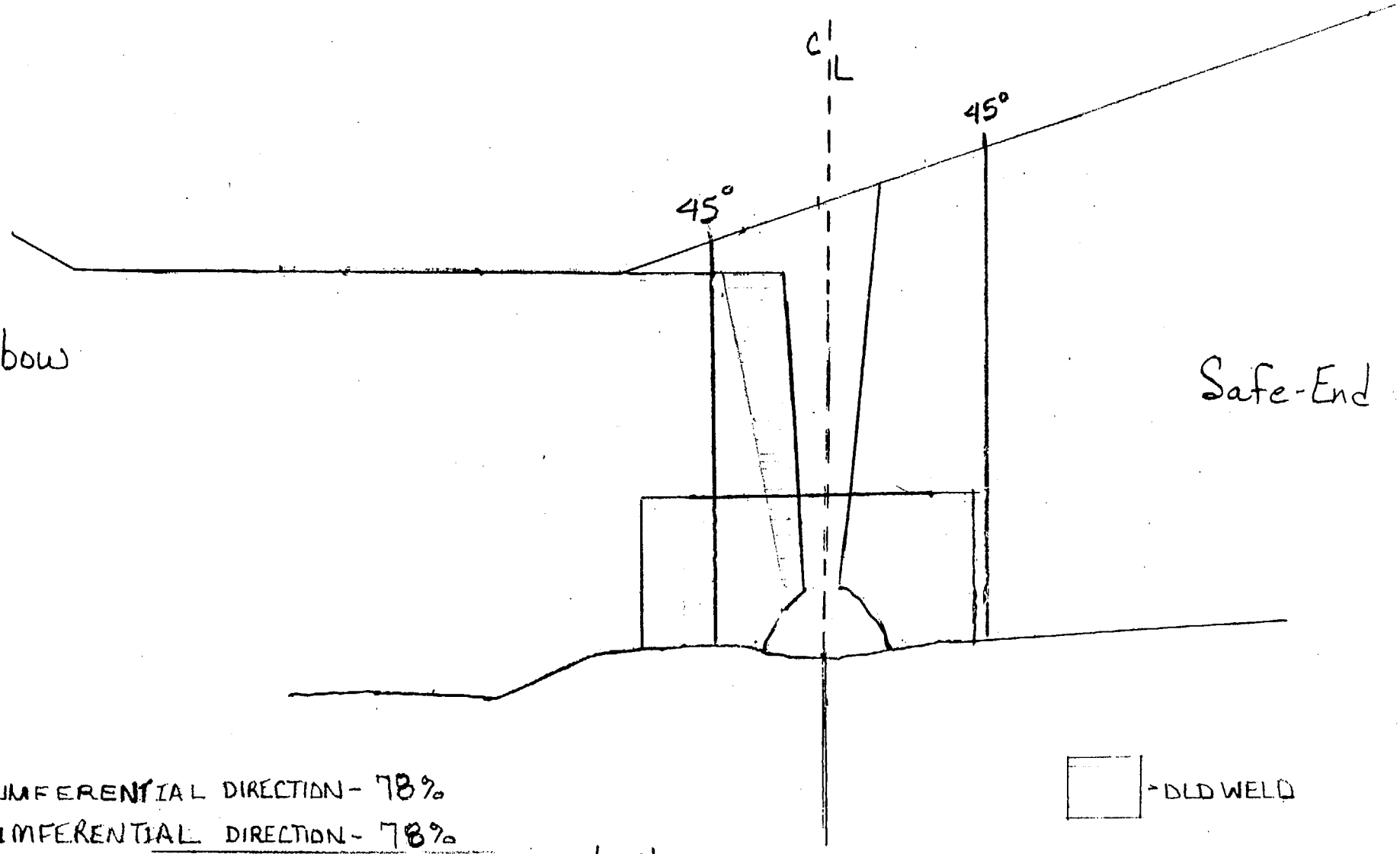

7 CIRCUMFERENTIAL DIRECTION - 78%
8 CIRCUMFERENTIAL DIRECTION - 78%
TOTAL - 78 % 4-8-01

TYPICAL CIRC CODE COVERAGE

SH IED

Farley Nuclear Plant
Ultrasonic Calibration and Examination Record

FNP-0-N_ _-100.41
Southern Nuclear Operating Company

Unit	Sketch/Component Number	Date	Sheet No.
2	APR1-4300-4R	4/4/01	S01F2U072 Page 1 of 1

Procedure/Rev./TCN	Couplant/Batch No.	ThermometerSN/Cal Due Date	Linearity Sheet No.
FNP-0-NDE-100.41 / 4 / N/A	Ultragel II / 00125	FNP-EDT-9003 10-11-02	S01F2L007

Instrument

Instrument	Panametrics / Epoch IIB	
Serial No.	92042604	
	Axial dB	Circ dB
Reference	73.0	NA
Scanning	73.0	NA
Reject	0%	
Frequency	2.25 MHz	
Mode	DUAL	
Damping	400 OHMS	

Search Unit

Transducer Mfg.	KBA
Serial Number	M18125/A21144
Model No.	113-261-600
Size / No.	1.0"/2 Shape Round
Frequency/Mode	1.0 / Long.
"A" Dimension	0.9"
Nom Angle	53°
Meas Angle	35°
Cable Type / No. Conn.	RG174/0
Cable Length	6'

Calibration Block

Cal. Blk. No.	ALA-61
Thickness	3"
Cal. Temp	75 °F
Cal. In	7:53
Cal. Chk.	9:42
Cal. Out	17:21
Ref. Blk. No.	LMT-048
Reflector/dB	1"RAD/53
Amp/Sweep	70 % / 1.6

Axial Scan Calibration				Circ Scan Calibration			
Cal. Refl.	Signal Amp.	Sweep Div.	Wmax	Cal. Refl.	Signal Amp.	Sweep Div.	Wmax
ID NOTCH	90%	6.0	2.1	N/A			

Calibration Remarks:

Comp Temp. 73 °F **Configuration -** ELBOW TO SAFE END **Wo Loc.** BOTTOM OF TAPER **Lo Loc.** ELBOW EXTRADOS

Scan Dir.	Results NI	NRI	RI	Ind No.	% DAC	Length L1	Lmax	L2	Reference Measurement W1	Wmax	W2	Sweep Position S1	Smax	S2	Thickness 1"<--	C/L	-->1"	Notes:
2	○	◉	○															(1)

Examination/Limitation Remarks: EXAMINATION PEFORMED AT REFERENCE dB DUE TO EXCESSIVE NOISE LEVEL. (1) SHEAR COMPONENT REDIERECTED, OBSERVED 360 DEGREES.
* COMBINED COVERAGE FROM ALL SCANS. JEA 4-8-01

Total Length of Weld	Crown Width	Total Length of Weld Examined	Extent of Perpendicular Scans (W)	Extent of Parallel Scans (L)
115	2.0"	5 (L) N/A 2 (L) 115 7 and 8 (W) N/A	5- From N/A to N/A 2- From -0.9 to 5.2	From (5) N/A to (2) N/A

Primary Examiner	Level	Initials	Assistant Examiner	Level	Initials	Non-Technical Review	Date
Robert G. Auer	II	RGA	N/A	N/A		[signature]	04-08-01

SNC NDE Level II/III Review	Date	Percentage of Code Coverage	ANII Review	Date
J. Eric Aycock L-III	4-8-01	* 71.25	[signature]	4/12/01

Revision 4

SH(RED

Farley Nuclear Plant
Ultrasonic Calibration and Examination Record

FNP-0-N...-100.41
Southern Nuclear Operating Company

Unit	Sketch/Component Number	Date	Sheet No.
2	APR1-4300-4R	04/04/01	S01F2U077 Page 1 of 1

Procedure/Rev./TCN	Couplant/Batch No.	ThermometerSN/Cal Due Date	Linearity Sheet No.
FNP-0-NDE-100.41 / 4 / N/A	Ultragel II / 00125	FNP-EDT-9003 / 10-11-02	S01F2L007

Instrument

Instrument	Panametrics / Epoch IIB		
Serial No.	92042604		
	Axial dB	Circ dB	
Reference	N/A	72	
Scanning	N/A	78	
Reject	0%		
Frequency	2.25 MHz		
Mode	DUAL		
Damping	400 OHMS		

Search Unit

Transducer Mfg.	KBA
Serial Number	M06171/M06172
Model No.	113-262-600
Size / No.	1.0"/2 Shape Round
Frequency/Mode	2.25 / Long.
"A" Dimension	1"
Nom Angle	45°
Meas Angle	47°
Cable Type / No. Conn.	RG174/0
Cable Length	6'

Calibration Block

Cal. Blk. No.	ALA-61
Thickness	3"
Cal. Temp	75 °F
Cal. In	8:04
Cal. Chk.	10:40
Cal. Out	17:27
Ref. Blk. No.	18 deg shoe
Reflector/dB	NA/63
Amp/Sweep	80 % / 2.5

Axial Scan Calibration				Circ Scan Calibration			
Cal. Refl.	Signal Amp.	Sweep Div.	Wmax	Cal. Refl.	Signal Amp.	Sweep Div.	Wmax
				ID notch	80%	7.7	5.2

Calibration Remarks:

SINCE WEDGES HAVE 18 DEGREE TILT, CAL CHECK WAS PERFORMED BY COUPLING TO OPPOSITE DIRECTION WEDGE.

Comp Temp.	Configuration -	Wo Loc.	Lo Loc.
73 °F	ELBOW TO SAFE END	BOTTOM OF TAPER	ELBOW EXTRADOS

Scan Dir.	Results NI	NRI	RI	Ind No.	% DAC	Length L1	Lmax	L2	Reference Measurement W1	Wmax	W2	Sweep Position S1	Smax	S2	Thickness 1"<--	C/L	-->1"	Notes:
7	○	◉	○															

Examination/Limitation Remarks: 18 DEGREE RIGHT TILT WEDGE.

* COMBINED COVERAGE FROM ALL SCANS. RGA 4-8-01

Total Length of Weld	Crown Width	Total Length of Weld Examined	Extent of Perpendicular Scans (W)	Extent of Parallel Scans (L)
115	2"	5 (L) N/A 2 (L) N/A 7 and 8 (W) 115	5- From N/A to N/A 2- From N/A to N/A	From (5) +0.8 to (2) NL

Primary Examiner	Level	Initials	Assistant Examiner	Level	Initials	Non-Technical Review	Date
Robert G. Auer	II	RGA	N/A	N/A		[signature]	04-08-01

SNC NDE Level II/III Review	Date	Percentage of * Code Coverage	ANII Review	Date
J. Eric Clycock S-III	4-8-01	71.25	[signature]	4/12/01

Revision 4

SH(RED

Farley Nuclear Plant
Ultrasonic Calibration and Examination Record

FNP-0-N_ _-100.41
Southern Nuclear Operating Company

Unit	Sketch/Component Number	Date	Sheet No.
2	APR1-4300-4R	04/04/01	S01F2U081 Page 1 of 1

Procedure/Rev./TCN	Couplant/Batch No.	ThermometerSN/Cal Due Date	Linearity Sheet No.
FNP-0-NDE-100.41 / 4 / N/A	Ultragel II / 00125	FNP-EDT-9003 / 10-11-02	S01F2L007

Instrument

Instrument	Panametrics / Epoch IIB	
Serial No.	92042604	
	Axial dB	Circ dB
Reference	N/A	74
Scanning	N/A	80
Reject	0%	
Frequency	2.25 MHz	
Mode	DUAL	
Damping	400 OHMS	

Search Unit

Transducer Mfg.	KBA
Serial Number	00MBN6/00MBN7
Model No.	113-262-600
Size / No.	1.0"/2 Shape Round
Frequency/Mode	2.25 / Long.
"A" Dimension	1"
Nom Angle	45°
Meas Angle	47°
Cable Type / No. Conn.	RG174/0
Cable Length	6'

Calibration Block

Cal. Blk. No.	ALA-61
Thickness	3"
Cal. Temp	75 °F
Cal. In	7:57
Cal. Chk.	10:18
Cal. Out	17:24
Ref. Blk. No.	18 deg shoe
Reflector/dB	NA/74
Amp/Sweep	80 % / 2.4

Axial Scan Calibration				Circ Scan Calibration			
Cal. Refl.	Signal Amp.	Sweep Div.	Wmax	Cal. Refl.	Signal Amp.	Sweep Div.	Wmax
				ID notch	80%	7.0	4.8

Calibration Remarks:

SINCE WEDGES HAVE 18 DEGREE TILT, CAL CHECK WAS PERFORMED BY COUPLING TO OPPOSITE DIRECTION WEDGE.

Comp Temp. 73 °F **Configuration -** ELBOW TO SAFE END **Wo Loc.** BOTTOM OF TAPER **Lo Loc.** ELBOW EXTRADOS

Scan Dir.	Results NI	NRI	RI	Ind No.	% DAC	Length L1	Lmax	L2	Reference Measurement W1	Wmax	W2	Sweep Position S1	Smax	S2	Thickness 1"<--	C/L	-->1"	Notes:
8	○	◉	○															

Examination/Limitation Remarks: 18 DEGREE LEFT TILT WEDGE.

* COMBINED COVERAGE FROM ALL SCANS. RGA 4-8-01

Total Length of Weld	Crown Width	Total Length of Weld Examined	Extent of Perpendicular Scans (W)	Extent of Parallel Scans (L)
115	2"	5 (L) N/A 2 (L) N/A 7 and 8 (W) 115	5- From N/A to N/A 2- From N/A to N/A	From (5) +0.8 to (2) NL

Primary Examiner	Level	Initials	Assistant Examiner	Level	Initials	Non-Technical Review	Date
Robert G. Auer	II	RGA	N/A	N/A		[signature]	04-08-01

SNC NDE Level II/III Review	Date	Percentage of Code Coverage *	ANII Review	Date
[signature]	4-8-01	71.25	[signature]	4/12/01

Revision 4

BECHTEL

WP& IR #	NONDESTRUCTIVE EXAMINATION REPORT LIQUID PENETRANT EXAMINATION		REPORT NUMBER
P-RCC-260			PT- 01 - 174
ISO # / DWG # / FSK #	JOB NAME	JOB NUMBER	DATE
FSK-M- 268	Farley Unit 2 SGRP	23734	4-3-01

COMPONENT CONFIGURATION	TIME OF EXAM	PROCEDURE / REV
Safe End to Elbow	☑ N/A ☐ PRE-PWHT ☐ POST-PWHT	PT (SR)-ASME III/XI R/ 2

CODE / WELD CLASS	SURFACE CONDITION	PIPE DIA	MATL TYPE	COMPONENT TEMP
ASME XI / IWB	☑ GROUND ☐ AS WELDED	31" ID	☐ C/S ☑ S/S ☐ D/M	68 °F PENET TEMP 71 °F

CLEANER / REMOVER	PENETRANT	DEVELOPER
MFR. MAGNUFLUX	MFR. MAGNUFLUX	MFR. MAGNUFLUX
TYPE SKC-S	TYPE SKL-SP	TYPE SKD-S2
BATCH # 00C06K	BATCH # 00C12K	BATCH # 00G07K

DEFECT CODE: C - CRACKS R - ROUNDED INDICATIONS L - LINEAR INDICATION

PART OR WELD NUMBER	DISPOSITION ACC	DISPOSITION REJ	DEFECT CODE	REMARKS
FW-1-SG (O.D.)	✓			NO Recordable Indications
(Hot Leg)				
ISI #-APR1-4300-4R				
Qra 4-9-01				

SKETCH / COMMENTS: 100 % Code Coverage Achieved

M&TE I.D. # 198057 CAL.DUE 7-25-01	EXAMINER D. Rohne	LEVEL II	DATE 4-3-01
NOTES:	REVIEWER DJ Stoll	LEVEL III	DATE 4/03/01

SNC REVIEW - J. Erin Aycock L-III 4-9-01 ANII REVIEW: CG Ward 4/12/01

SH RED

Farley Nucle. lant
Ultrasonic Calibration and Examination Record

FNP-0-..-100.41
Southern Nuclear Operating Company

Unit	Sketch/Component Number	Date	Sheet No.
2	APR1-4300-5R	04/04/01	S01F2U086 Page 1 of 4

Procedure/Rev./TCN	Couplant/Batch No.	ThermometerSN/Cal Due Date	Linearity Sheet No.
FNP-0-NDE-100.41 / 4 / N/A	Ultragel II / 00125	FNP-EDT-9003 / 10-11-02	S01F2L001

Instrument

Instrument	Panametrics / Epoch III	
Serial No.	00409506	
	Axial dB	Circ dB
Reference	71	NA
Scanning	71	NA
Reject	0%	
Frequency	BROADBAND	
Mode	DUAL	
Damping	400 OHMS	

Search Unit

Transducer Mfg.	KBA 4-8-01		
Serial Number	E12369/E12385		
Model No.	ALPHA		
Size / No.	1.0"	Shape	Round
Frequency/Mode	1.0 / Long.		
"A" Dimension	1"		
Nom Angle	45°		
Meas Angle	43°		
Cable Type / No. Conn.	RG174/0		
Cable Length	6'		

Calibration Block

Cal. Blk. No.	ALA/APR-33
Thickness	2.487"
Cal. Temp	75 °F
Cal. In	7:30
Cal. Chk.	09:12
Cal. Out	17:15
Ref. Blk. No.	LMT-048
Reflector/dB	2" RAD./55
Amp/Sweep	80 % / 4.0

Axial Scan Calibration

Cal. Refl.	Signal Amp.	Sweep Div.	Wmax
1/4T	60	1.7	0.8"
1/2T	80	3.5	1.6"
3/4T	65	4.8	1.9"
ID notch	50	6.6	2.6"

Circ Scan Calibration

Cal. Refl.	Signal Amp.	Sweep Div.	Wmax
NA			

Calibration Remarks:

TAPERED CONFIGURATION PREVENTED CIRC SCAN FROM REACHING CODE VOLUME ON THE ELBOW SIDE.

Comp Temp. 73 °F **Configuration -** SAFE END TO ELBOW **Wo Loc.** BOTTOM OF TAPER **Lo Loc.** ELBOW EXTRADOS

Scan Dir.	Results NI	NRI	RI	Ind No.	% DAC	Length L1	Lmax	L2	Reference Measurement W1	Wmax	W2	Sweep Position S1	Smax	S2	Thickness 1"<--	C/L	-->1"	Notes:
2	○	○	●	1	125	N/A	49"	N/A	N/A	2.3	N/A	N/A	3.25	N/A	2.80"	3.05"	3.4"	NOTE 1

Examination/Limitation Remarks: NOTE 1-COUNTERBORE SEEN 360 DEGREE INTERMITTMENT. SCANNED AT REFERENCE GAIN DUE TO EXCESSIVE NOISE LEVEL IN COMPONENT.
*COMBINED COVERAGE FROM ALL SCANS. 4ea 4-8-01 Reference IER-004 for indication evaluation 4ea 4-9-01

Total Length of Weld	Crown Width	Total Length of Weld Examined	Extent of Perpendicular Scans (W)	Extent of Parallel Scans (L)
115	2"	5 (L) N/A 2 (L) 115 7 and 8 (W) 0	5- From N/A to N/A 2- From 3.3 to 1.0	From (5) 0 to (2) 0

Primary Examiner	Level	Initials	Assistant Examiner	Level	Initials	Non-Technical Review	Date
Jerry W. Newgard	II	JN	N/ A	N/A		[signature]	04-08-01

SNC NDE Level II/III Review	Date	Percentage of Code Coverage *	ANII Review	Date
J. Eric Aycock S-III	4-8-01	71.25	[signature]	4/12/01

Revision 4

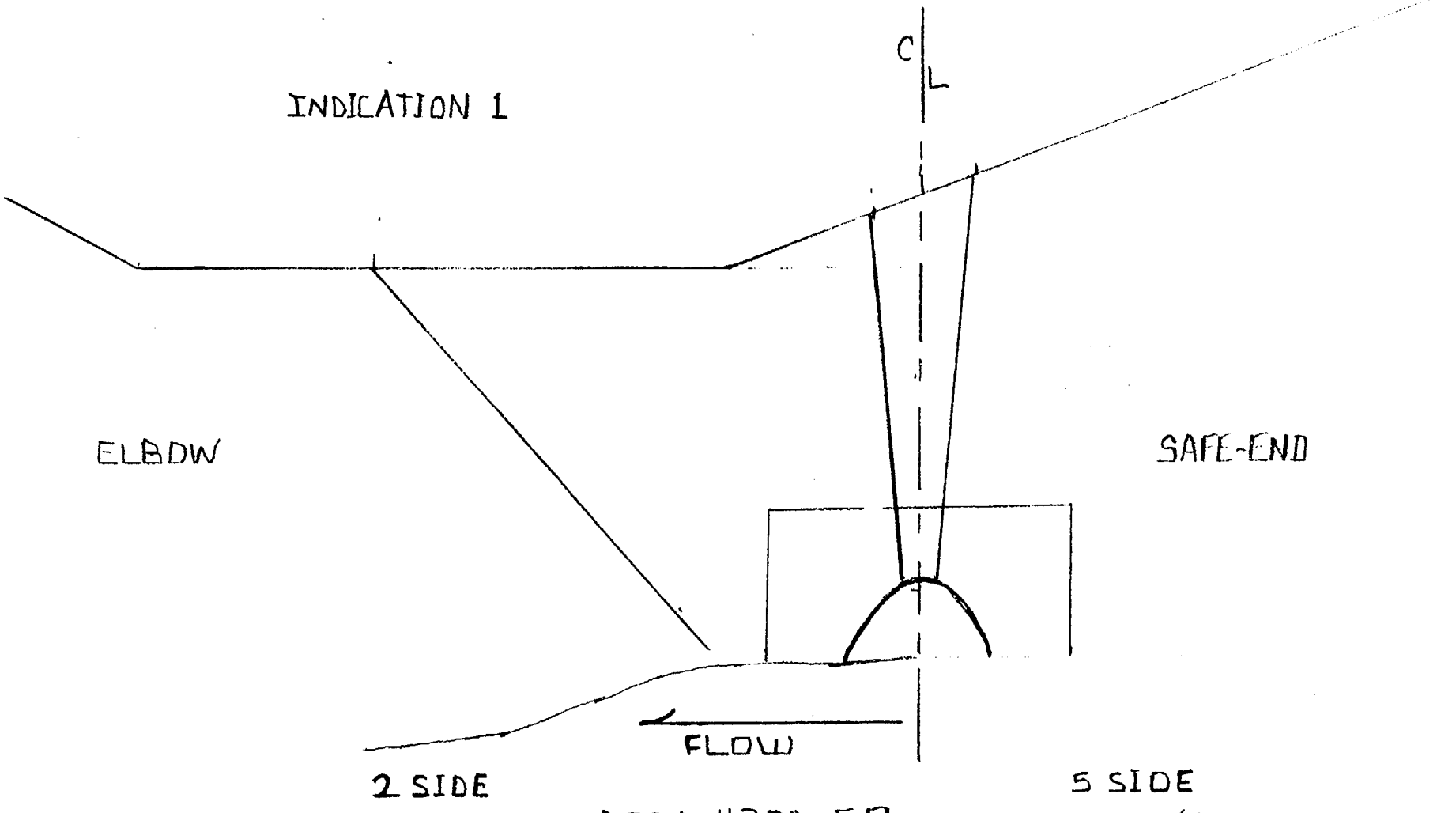

APR1-4300-5R

gea 4-8-01

S01F2U086 2 of 4

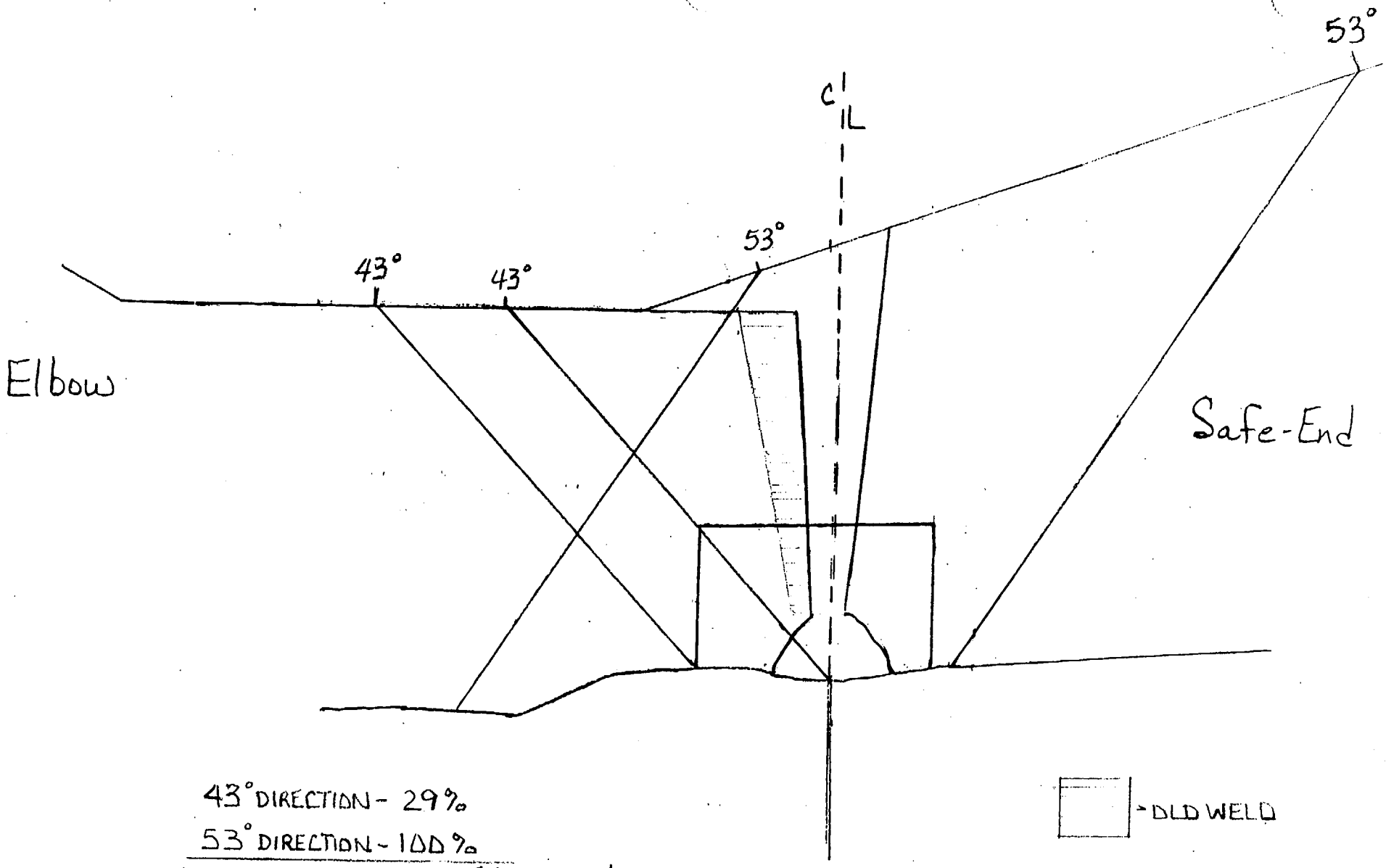

43° DIRECTION - 29%
53° DIRECTION - 100%
TOTAL AXIAL - 64.5% QEW 4-8-01

TYPICAL AXIAL CODE COVERAGE

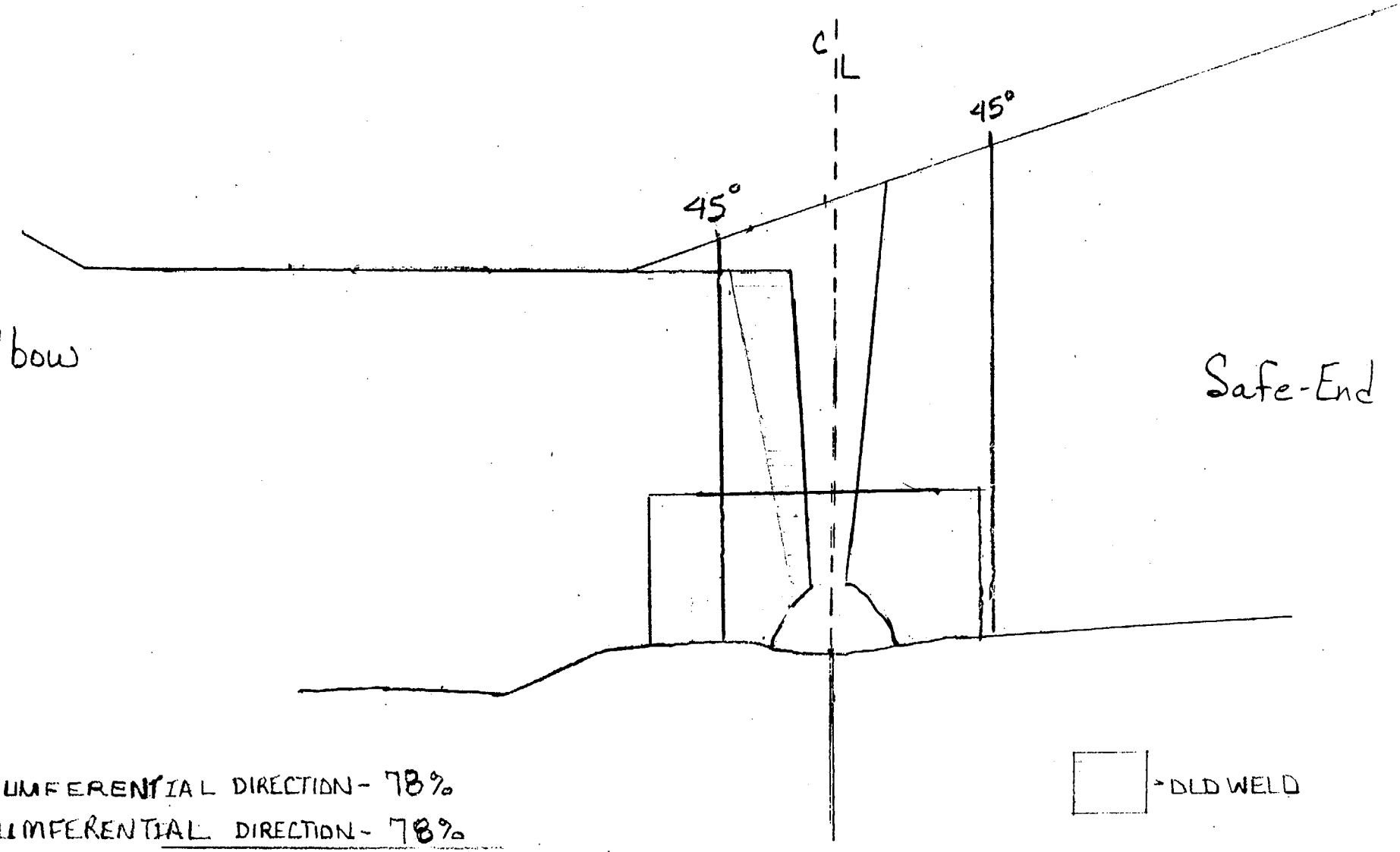

7 CIRCUMFERENTIAL DIRECTION - 78%
8 CIRCUMFERENTIAL DIRECTION - 78%
TOTAL - 78 % Gen 4801

TYPICAL CIRC CODE COVERAGE

SHARED

Farley Nuclear Plant
Ultrasonic Calibration and Examination Record

FNP-0-NDE-100.41
Southern Nuclear Operating Company

Unit	Sketch/Component Number	Date	Sheet No.
2	APR1-4300-5R	4/4/01	S01F2U073 Page 1 of 1

Procedure/Rev./TCN	Couplant/Batch No.	ThermometerSN/Cal Due Date	Linearity Sheet No.
FNP-0-NDE-100.41 / 4 / N/A	Ultragel II / 00125	FNP-EDT-9003 10-1-02	S01F2L007

Instrument

Instrument: Panametrics / Epoch IIB
Serial No. 92042604

	Axial dB	Circ dB
Reference	73.0	NA
Scanning	73.0	NA
Reject	0%	
Frequency	2.25 MHz	
Mode	DUAL	
Damping	400 OHMS	

Search Unit

Transducer Mfg. KBA
Serial Number M18125/A21144
Model No. 113-261-600
Size / No. 1.0"/2 Shape Round
Frequency/Mode 1.0 / Long.
"A" Dimension 0.9"
Nom Angle 53
Meas Angle 35 °
Cable Type / No. Conn. RG174/0
Cable Length 6'

Calibration Block

Cal. Blk. No. ALA-61
Thickness 3"
Cal. Temp 75 °F
Cal. In 7:53
Cal. Chk. 10:00
Cal. Out 17:21
Ref. Blk. No. LMT-048
Reflector/dB 1"RAD/53
Amp/Sweep 70 % / 1.6

Axial Scan Calibration				Circ Scan Calibration			
Cal. Refl.	Signal Amp.	Sweep Div.	Wmax	Cal. Refl.	Signal Amp.	Sweep Div.	Wmax
ID NOTCH	90%	6.0	2.1	N/A			

Calibration Remarks:

Comp Temp. 75 °F
Configuration - SAFE END TO ELBOW
Wo Loc. BOTTOM OF TAPER
Lo Loc. ELBOW EXTRADOS

Scan Dir.	Results NI	NRI	RI	Ind No.	% DAC	Length L1	Lmax	L2	Reference Measurement W1	Wmax	W2	Sweep Position S1	Smax	S2	Thickness 1"<--	C/L	-->1"	Notes:
5	○	●	○															(1)

Examination/Limitation Remarks: EXAMINATION PERFORMED AT REFERENCE dB DUE TO EXCESSIVE NOISE LEVEL. (1) SHEAR COMPONENT REDIRECTED, OBSERVED 360 DEGREES.
* COMBINED COVERAGE FROM ALL SCANS. JEA 4-8-01

Total Length of Weld 115
Crown Width 2"
Total Length of Weld Examined: 5 (L) 115 2 (L) N/A 7 and 8 (W) N/A
Extent of Perpendicular Scans (W): 5- From -0.9 to 5.2 2- From N/A to N/A
Extent of Parallel Scans (L): From (5) N/A to (2) N/A

Primary Examiner	Level	Initials	Assistant Examiner	Level	Initials	Non-Technical Review	Date
Robert G. Auer	II	RGA	N/A	N/A		[signature]	04-08-01

SNC NDE Level II/III Review	Date	Percentage of Code Coverage *	ANII Review	Date
J. Eric Aycock S-III	4-8-01	71.25	[signature]	4/12/01

Revision 4

SHARED

Farley Nuclear Plant
Ultrasonic Calibration and Examination Record

FNP-0-NDE-100.41
Southern Nuclear Operating Company

Unit	Sketch/Component Number	Date	Sheet No.
2	APR1-4300-5R	04/04/01	S01F2U082 Page 1 of 1

Procedure/Rev./TCN	Couplant/Batch No.	ThermometerSN/Cal Due Date	Linearity Sheet No.
FNP-0-NDE-100.41 / 4 / N/A	Ultragel II / 00125	FNP-EDT-9003 / 10-11-02	S01F2L007

Instrument

Instrument	Panametrics / Epoch IIB	
Serial No.	92042604	
	Axial dB	Circ dB
Reference	N/A	74
Scanning	N/A	80
Reject	0%	
Frequency	2.25 MHz	
Mode	DUAL	
Damping	400 OHMS	

Search Unit

Transducer Mfg.	KBA
Serial Number	00MBN6/00MBN7
Model No.	113-262-600
Size / No.	1.0"/2 Shape Round
Frequency/Mode	2.25 / Long.
"A" Dimension	1"
Nom Angle	45°
Meas Angle	47°
Cable Type / No. Conn.	RG174/0
Cable Length	6'

Calibration Block

Cal. Blk. No.	ALA-61
Thickness	3"
Cal. Temp	75 °F
Cal. In	7:57
Cal. Chk.	10:29
Cal. Out	17:24
Ref. Blk. No.	18 deg shoe
Reflector/dB	NA/74
Amp/Sweep	80 % / 2.4

Axial Scan Calibration				Circ Scan Calibration			
Cal. Refl.	Signal Amp.	Sweep Div.	Wmax	Cal. Refl.	Signal Amp.	Sweep Div.	Wmax
				ID notch	80%	7.0	4.8

Calibration Remarks:

SINCE WEDGES HAVE 18 DEGREE TILT, CAL CHECK WAS PERFORMED BY COUPLING TO OPPOSITE DIRECTION WEDGE.

Comp Temp. 73 °F **Configuration -** SAFE END TO ELBOW **Wo Loc.** BOTTOM OF TAPER **Lo Loc.** ELBOW EXTRADOS

Scan Dir.	Results NI	NRI	RI	Ind No.	% DAC	Length L1	Lmax	L2	Reference Measurement W1	Wmax	W2	Sweep Position S1	Smax	S2	Thickness 1"<--	C/L	-->1"	Notes:
7	○	◉	○															

Examination/Limitation Remarks: 18 DEGREE LEFT TILT WEDGE.

* COMBINED COVERAGE FROM ALL SCANS. RGA 4-8-01

Total Length of Weld	Crown Width	Total Length of Weld Examined	Extent of Perpendicular Scans (W)	Extent of Parallel Scans (L)
115	2"	5 (L) N/A 2 (L) N/A 7 and 8 (W) 115	5- From N/A to N/A 2- From N/A to N/A	From (5) NL to (2) -0.8

Primary Examiner	Level	Initials	Assistant Examiner	Level	Initials	Non-Technical Review	Date
Robert G. Auer	II	RGA	N/A	N/A		[signature]	04-08-01

SNC NDE Level II/III Review	Date	Percentage of * Code Coverage	ANII Review	Date
J. Eric Aycock L-III	4-8-01	71.25	C Guard	4/12/01

Revision 4

SHARED

Farley Nuclear Plant
Ultrasonic Calibration and Examination Record

FNP-0-NDE-100.41
Southern Nuclear Operating Company

Unit	Sketch/Component Number	Date	Sheet No.
2	APR1-4300-5R	04/04/01	S01F2U078 Page 1 of 1

Procedure/Rev./TCN	Couplant/Batch No.	ThermometerSN/Cal Due Date	Linearity Sheet No.
FNP-0-NDE-100.41 / 4 / N/A	Ultragel II / 00125	FNP-EDT-9003 / 10-11-02	S01F2L007

Instrument

Instrument	Panametrics / Epoch IIB	
Serial No.	92042604	
	Axial dB	Circ dB
Reference	N/A	72
Scanning	N/A	78
Reject	0%	
Frequency	2.25 MHz	
Mode	DUAL	
Damping	400 OHMS	

Search Unit

Transducer Mfg.	KBA		
Serial Number	M06171/M06172		
Model No.	113-262-600		
Size / No.	1.0"/2	Shape	Round
Frequency/Mode	2.25 / Long.		
"A" Dimension	1"		
Nom Angle	45°		
Meas Angle	47°		
Cable Type / No. Conn.	RG174/0		
Cable Length	6'		

Calibration Block

Cal. Blk. No.	ALA-61
Thickness	3"
Cal. Temp	75 °F
Cal. In	8:04
Cal. Chk.	10:51
Cal. Out	17:27
Ref. Blk. No.	18 deg shoe
Reflector/dB	NA/63
Amp/Sweep	80 % / 2.5

Axial Scan Calibration				Circ Scan Calibration			
Cal. Refl.	Signal Amp.	Sweep Div.	Wmax	Cal. Refl.	Signal Amp.	Sweep Div.	Wmax
				ID notch	80%	7.7	5.2

Calibration Remarks:

SINCE WEDGES HAVE 18 DEGREE TILT, CAL CHECK WAS PERFORMED BY COUPLING TO OPPOSITE DIRECTION WEDGE.

Comp Temp. 73 °F **Configuration -** SAFE END TO ELBOW **Wo Loc.** BOTTOM OF TAPER **Lo Loc.** ELBOW EXTRADOS

Scan Dir.	Results NI	NRI	RI	Ind No.	% DAC	Length L1	Lmax	L2	Reference Measurement W1	Wmax	W2	Sweep Position S1	Smax	S2	Thickness 1"<--	C/L	-->1"	Notes:
8	○	◉	○															

Examination/Limitation Remarks: 18 DEGREE RIGHT TILT WEDGE.

* COMBINED COVERAGE FROM ALL SCANS. QEA 4-8-01

Total Length of Weld	Crown Width	Total Length of Weld Examined	Extent of Perpendicular Scans (W)	Extent of Parallel Scans (L)
115	2"	5 (L) N/A 2 (L) N/A 7 and 8 (W) 115	5- From N/A to N/A 2- From N/A to N/A	From (5) NL to (2) -0.8

Primary Examiner	Level	Initials	Assistant Examiner	Level	Initials	Non-Technical Review	Date
Robert G. Auer	II	RGA	N/A	N/A		James M. Agold	04/12/01

SNC NDE Level II/III Review	Date	Percentage of Code Coverage	ANII Review	Date
J. Erin Aycock L-III	4-8-01	71.25 *	[illegible]	4/12/01

Revision 4

BECHTEL

WP& IR #	NONDESTRUCTIVE EXAMINATION REPORT LIQUID PENETRANT EXAMINATION		REPORT NUMBER
P-RCC-260			PT- 01 - 173
ISO # / DWG # / FSK #	JOB NAME	JOB NUMBER	DATE
FSK-M-268	Farley Unit 2 SGRP	23734	4-3-01

COMPONENT CONFIGURATION	TIME OF EXAM	PROCEDURE / REV
SAFe End to EIBOW	☑ N/A ☐ PRE-PWHT ☐ POST-PWHT	PT (SR)-ASME III/XI R/ 2

CODE / WELD CLASS	SURFACE CONDITION	PIPE DIA	MATL TYPE	COMPONENT TEMP
ASME XI / IWB	☑ GROUND ☐ AS WELDED	31" ID	☐ C/S ☑ S/S ☐ D/M	68 °F PENET TEMP 71 °F

CLEANER / REMOVER	PENETRANT	DEVELOPER
MFR. MAGNUFLUX	MFR. MAGNUFLUX	MFR. MAGNUFLUX
TYPE SKC-S	TYPE SKL-SP	TYPE SKD-S2
BATCH # 00C06K	BATCH # 00C12K	BATCH # 00G07K

DEFECT CODE: C - CRACKS R - ROUNDED INDICATIONS L - LINEAR INDICATION

PART OR WELD NUMBER	DISPOSITION ACC	DISPOSITION REJ	DEFECT CODE	REMARKS
FW-2-SG (O.D)	✓			NO Recordable Indications
(Cold Leg)				
ISI #- APRI-4300-5R				
Qtw 4-9-01				

SKETCH / COMMENTS: 100 % Code Coverage Achieved

M&TE I.D. #	EXAMINER	LEVEL	DATE
198057 CAL.DUE 7-25-01	D. Rohne	II	4-3-01
NOTES:	REVIEWER	LEVEL	DATE
	G.J. Stoll	III	4/03/01

SNC Review - Q. Eric Aycock L-III 4-12-01
ANII Review: C G Ward 4/12/01

Farley Nuclear Plant
Support Examination Record VT-3

SHARED

FNP-0-NDE-100.23
Southern Nuclear Operating Company

Plant/ Unit	System/Support No	WO/WA/STP	Sheet No.
Farley / 2	APR1-3300-CS-1R	N/A	S01F2V002

Hanger Type	Type Exam/Technique	Procedure/Version	Exam Date
STEAM GENERATOR	VT-3 / DIRECT	FNP-0-NDE-100.23 / 4.0 / N/A	4/16/01

Examiner Signature	Level	Resolution		Tools
Paul DiValerio	II	1/32" Division (Scale)	☑	FLASHLIGHT, MIRROR, SCALE
Examiner Signature	**Level**	1/32" Line (Gray Card)	☐	
N/ A	N/A			

EXAMINATION LIST:

	Acceptable/ Unacceptable/ NA
Deformation or structural degradation of fasteners, springs, clamps, or other support items.	Acceptable
Missing, detached, or loosened support items.	Acceptable
Arc strikes, weld spatter, paint scoring, roughness, or general corrosion on close tolerance machined or sliding surfaces.	N/A
Any crack or linear indication.	Acceptable
Fluid loss or lack of fluid indication (hydraulic snubber only).	N/A
Other conditions	N/A

Spring Can Hot and Cold Positions (draw sketch) — Time of Exam N/A — N/A

Constant Spring Hanger
(Sketch setting of pointer and setting location of the hot (red) and cold (white) stickers)

Identification Plate Calibrated Load Setting N/A

Sketch (if applicable)

Comments:

ALL ALLEN SCREWS PROPERLY SAFETY WIRED

NDE Level II/III Review	Date:	ANII Review	Date:
Gary A. Lefter III	4-16-01	C G Ward	4/17/01

Farley Nuclear Plant
Support Examination Record VT-3

SHARED

FNP-0-NDE-100.23
Southern Nuclear Operating Company

Plant/ Unit	System/Support No	WO/WA/STP	Sheet No.
Farley / 2	APR1-3300-CS-2R	N/A	S01F2V005

Hanger Type	Type Exam/Technique	Procedure/Version	Exam Date
STEAM GENERATOR	VT-3 / DIRECT	FNP-0-NDE-100.23 / 4.0 / N/A	4/16/01

Examiner Signature	Level	Resolution		Tools
Paul DiValerio	II	1/32" Division (Scale)	✔	FLASHLIGHT, MIRROR, SCALE
Examiner Signature	**Level**	1/32" Line (Gray Card)	—	
N/ A	N/A			

EXAMINATION LIST:

	Acceptable/ Unacceptable/ NA
Deformation or structural degradation of fasteners, springs, clamps, or other support items.	Acceptable
Missing, detached, or loosened support items.	Acceptable
Arc strikes, weld spatter, paint scoring, roughness, or general corrosion on close tolerance machined or sliding surfaces.	N/A
Any crack or linear indication.	Acceptable
Fluid loss or lack of fluid indication (hydraulic snubber only).	N/A
Other conditions	N/A
Spring Can Hot and Cold Positions (draw sketch)	Time of Exam N/A / N/A
Constant Spring Hanger (Sketch setting of pointer and setting location of the hot (red) and cold (white) stickers)	
Identification Plate Calibrated Load Setting	N/A

Sketch (if applicable)

Comments:

ALL ALLEN SCREWS PROPERLY SAFETY WIRED

NDE Level II/III Review	Date:	ANII Review	Date:
Gary A. Lightner III	4-16-01	C G Ward	4/17/01

Version 4.0

Farley Nuclear Plant
Support Examination Record VT-3

SHARED

FNP-0-NDE-100.23
Southern Nuclear Operating Company

Plant/ Unit	System/Support No	WO/WA/STP	Sheet No.
Farley / 2	APR1-3300-CS-3R	N/A	S01F2V003

Hanger Type	Type Exam/Technique	Procedure/Version	Exam Date
STEAM GENERATOR	VT-3 / DIRECT	FNP-0-NDE-100.23 / 4.0 / N/A	4/16/01

Examiner Signature	Level	Resolution		Tools
Paul DiValerio	II	1/32" Division (Scale)	✔	FLASHLIGHT, MIRROR, SCALE
Examiner Signature	**Level**	1/32" Line (Gray Card)	—	
N/ A	N/A			

EXAMINATION LIST:

	Acceptable/ Unacceptable/ NA
Deformation or structural degradation of fasteners, springs, clamps, or other support items.	Acceptable
Missing, detached, or loosened support items.	Acceptable
Arc strikes, weld spatter, paint scoring, roughness, or general corrosion on close tolerance machined or sliding surfaces.	N/A
Any crack or linear indication.	Acceptable
Fluid loss or lack of fluid indication (hydraulic snubber only).	N/A
Other conditions	N/A
Spring Can Hot and Cold Positions (draw sketch)	Time of Exam N/A — N/A
Constant Spring Hanger (Sketch setting of pointer and setting location of the hot (red) and cold (white) stickers)	
Identification Plate Calibrated Load Setting	N/A

Sketch (if applicable)

Comments:

ALL ALLEN SCREWS PROPERLY SAFETY WIRED

NDE Level II/III Review	Date:	ANII Review	Date:
Terry A. Lofton TL	4-16-01	C G Ward	4/17/01

Version 4.0

Farley Nuclear Plant
Support Examination Record VT-3

SHARED

FNP-0-NDE-100.23
Southern Nuclear Operating Company

Plant/ Unit	System/Support No	WO/WA/STP	Sheet No.
Farley / 2	APR1-3300-CS-4R	N/A	S01F2V004

Hanger Type	Type Exam/Technique	Procedure/Version	Exam Date
STEAM GENERATOR	VT-3 / DIRECT	FNP-0-NDE-100.23 / 4.0 / N/A	4/16/01

Examiner Signature	Level	Resolution		Tools
Paul DiValerio	II	1/32" Division (Scale)	✔	FLASHLIGHT, MIRROR, SCALE
Examiner Signature	**Level**	1/32" Line (Gray Card)	—	
N/ A	N/A			

EXAMINATION LIST:

	Acceptable/ Unacceptable/ NA
Deformation or structural degradation of fasteners, springs, clamps, or other support items.	Acceptable
Missing, detached, or loosened support items.	Acceptable
Arc strikes, weld spatter, paint scoring, roughness, or general corrosion on close tolerance machined or sliding surfaces.	N/A
Any crack or linear ndication.	Acceptable
Fluid loss or lack of fluid indication (hydraulic snubber only).	N/A
Other conditions	N/A
Spring Can Hot and Cold Positions (draw sketch)	Time of Exam N/A — N/A
Constant Spring Hanger (Sketch setting of pointer and setting location of the hot (red) and cold (white) stickers)	
Identification Plate Calibrated Load Setting	N/A

Sketch (if applicable)

Comments:

ALL ALLEN SCREWS PROPERLY SAFETY WIRED

NDE Level II/III Review	Date:	ANII Review	Date:
III	4-16-01		4/17/01

Version 4.0

SHARED

Farley Nuclear Plant
Ultrasonic Calibration and Examination Record

FNP-0-NDE-100.43
Southern Nuclear Operating Company

Unit	Sketch/Component Number	Date	Sheet No.
2	APR2-4100-1R	4/17/01	S01F2U104 Page 1 of 2

Procedure/Rev./TCN	Couplant/Batch No.	ThermometerSN/Cal Due Date	Linearity Sheet No.
FNP-0-NDE-100.43 / 0 / N/A	Ultragel II / 00125	FNP-EDT-9003 10/11/02	S01F2L007

Instrument

Make/Model	Panametrics / Epoch IIB	
Serial No.	92042604	
	Ax dB	Circ dB
Reference	30.0	32.0
Scanning	44.0	46.0
Pulser	HIGH	
Frequency	2.25	Rep Rate FIXED
Mode	P/E	Filter ON
Damping	400	Reject 0%

Search Unit

Transducer Mfg.	KBA
Serial No.	45393
Model No.	MSWQC
Size / No.	.5" / 1
Shape	Round
Frequency/Mode	2.25 / Shear
"A" Dimension	0.4"
Nom Angle	45°
Meas Angle	45°
Cable Type /No. Conn.	RG-174 / 0
Cable Length	6'

Calibration Block

Cal. Blk. No.	ALA-24
Thickness	1.2
Cal. Temp	75 °F
Cal. In	8:31:00 PM
Cal. Chk.	09:31 PM
Cal. Out	11:11:00 PM
Ref. Blk. No.	86-4333
Reflector/dB	SDH / 32.0
Amp/Sweep	30 % 2.5

Axial Scans Calibration

Cal. Refl.	Signal Amp.	Sweep Div.	Wmax
1T	80%	4.2	1.2"
2T	40%	8.4	2.5"

Circ Scans Calibration

Cal. Refl.	Signal Amp.	Sweep Div.	Wmax
1T	80%	5.8	1.35"

Calibration Remarks:

Comp Temp.	Configuration -	Wo Loc.	Lo Loc.
95 °F	NOZZLE TO PUP-PIECE	WELD CL	ELBOW EXTRADOS

Notes:

Scan Dir.	Results NI	Results NRI	Results RI	Ind No.	% DAC	Length L1	Length Lmax	Length L2	Ref. Measurements Wmax	Ref. Measurements Smax	Thickness 1"<--	Thickness C/L	Thickness -->1"
8	○	◉	○										
7	○	◉	○										
5	○	○	◉	1	30	*	55"	*	1.3"	1.87"			
2	○	○	◉	2	25	*	55"	*	1.4"	1.9"			

* 360° INTERMITTENT, AT VARYING AMPLITUDE

* 360° INTERMITTENT, AT VARYING AMPLITUDE

Examination/Limitation Remarks: LAMINATION SCAN PERFORMED WITH MSEB sn:06605, 4MHz 3.5x10 mm. NO INDICATIONS.
Id. Geometry Root - See IER-010 GEN 4/18-01

Total Length of Weld	Crown Width	Total Length of Weld Examined	Extent of Perpendicular Scans (W)	Extent of Parallel Scans (L)
101	1.6"	5 (L) 101 2 (L) 101 7 and 8 (W) 101	5- From 1.9 to NL 2- From NL to NL	From (5) NL to (2) NL

Primary Examiner	Level	Initials	Assistant Examiner	Level	Initials	Non-Technical Review	Date
Robert G. Auer	II	RGA	Paul DiValerio	II	PD	J. Erin Laycock	4-18-01

SNC NDE Level II/III Review		Date	Percentage of Code Coverage	ANII Review	Date
Danny L. Lefler	III	4-17-01	100	[illegible]	4/18/01

Revision 0

APR2-4100-1R

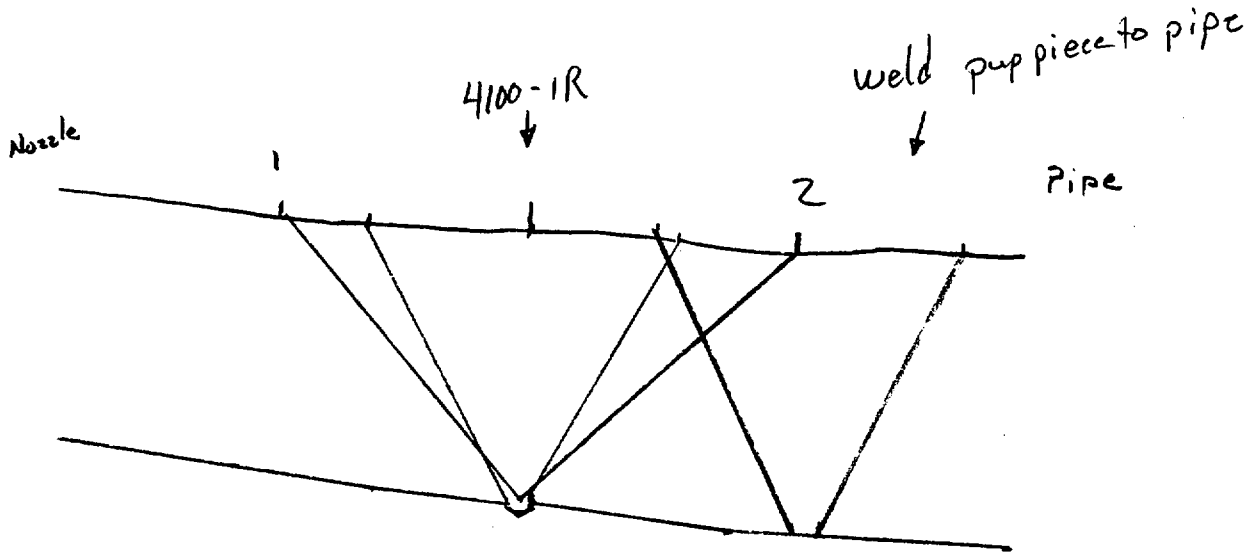

Indications 1 + 2 are I.d. geometry-Root
Verified with 60°.

Daryl Rotter 4-17-01

SHARED

Farley Nuclear Plant
Ultrasonic Calibration and Examination Record

FNP-0-NDE-100.43
Southern Nuclear Operating Company

Unit	Sketch/Component Number	Date	Sheet No.
2	APR2-4100-1R	4/17/01	S01F2U107 Page 1 of 2

Procedure/Rev./TCN	Couplant/Batch No.	ThermometerSN/Cal Due Date	Linearity Sheet No.
FNP-0-NDE-100.43 / 0 / N/A	Ultragel II / 00125	FNP-EDT-9003 10/11/02	S01F2L007

Instrument

Make/Model	Panametrics / Epoch IIB	
Serial No.	92042604	
	Ax dB	Circ dB
Reference	49.0	N/A
Scanning	63.0	N/A
Pulser	HIGH	
Frequency	2.25	Rep Rate FIXED
Mode	P/E	Filter ON
Damping	400	Reject 0%

Search Unit

Transducer Mfg.	KBA		
Serial No.	44694		
Model No.	MSWQC		
Size / No.	.5" / 1	Shape	/ Round
Frequency/Mode	2.25 / Shear		
"A" Dimension	0.6"		
Nom Angle	60°	Meas Angle	57°
Cable Type /No. Conn.	RG-174 / 0		
Cable Length	6'		

Calibration Block

Cal. Blk. No.	ALA-24		
Thickness	1.2		
Cal. Temp	75 °F		
Cal. In	8:34:00 PM		
Cal. Chk.	10:23 PM		
Cal. Out	11:14:00 PM		
Ref. Blk. No.	86-4333		
Reflector/dB	SDH	/ 49.0	
Amp/Sweep	90	%	3.7

Axial Scans Calibration

Cal. Refl.	Signal Amp.	Sweep Div.	Wmax
1T	80%	5.5	1.85

Circ Scans Calibration

Cal. Refl.	Signal Amp.	Sweep Div.	Wmax

Calibration Remarks:

Comp Temp. 95 °F **Configuration -** NOZZLE TO PUP-PIECE **Wo Loc.** WELD CL **Lo Loc.** ELBOW EXTRADOS

Scan Dir.	Results NI	NRI	RI	Ind No.	% DAC	Length L1	Lmax	L2	Ref. Measurements Wmax	Smax	Thickness 1"<--	C/L	-->1"
5	○	○	◉	1	40	*	55"	*	1.9"	2.69"			
2	○	○	◉	2	75	*	55"	*	2.1"	2.8"			

Notes:

*360° INTERMITTENT, AT VARYING AMPLITUDE

* 360° INTERMITTENT, AT VARYING AMPLITUDE

Examination/Limitation Remarks: EXAMINATION PERFORMED TO VERIFY 45° INDICATIONS.
Id. Geometry Root - See IER-010 JGW 4-18-01

Total Length of Weld	Crown Width	Total Length of Weld Examined	Extent of Perpendicular Scans (W)	Extent of Parallel Scans (L)
101	1.6	5 (L) N/A 2 (L) N/A 7 and 8 (W) N/A	5- From N/A to N/A 2- From N/A to N/A	From (5) N/A to (2) N/A

Primary Examiner	Level	Initials	Assistant Examiner	Level	Initials	Non-Technical Review	Date
Robert G. Auer	II	RGA	Paul DiValerio	II	PD	J. Edwin Aycock	4-18-01

SNC NDE Level II/III Review	Date	Percentage of Code Coverage	ANII Review	Date
Harry A. Lofties III	4-17-01	N/A	C G Ward	4/18/01

Revision 0

APR2-4100-1R

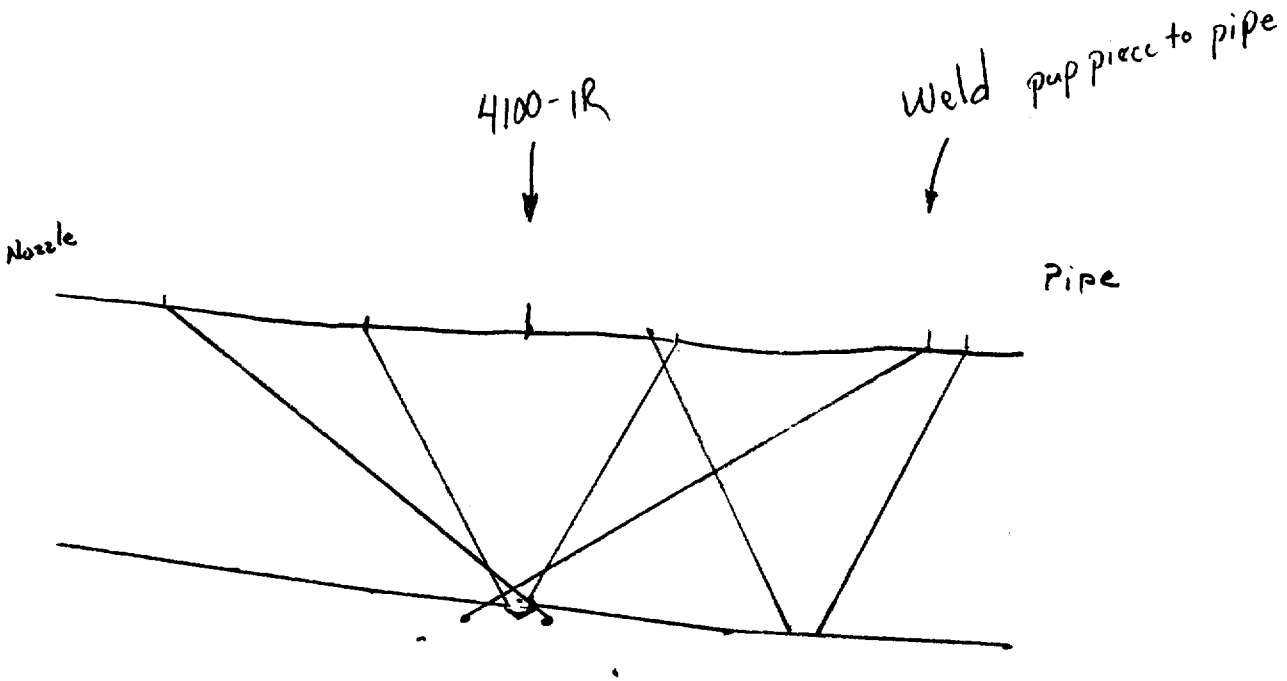

Indications 1+2 are Id. geometry-Root
verified with 45° S01F24104

Gary A. Lofton III 4-17-01

S01F24107 Sheet 2 of 2

BECHTEL

WP& IR #	NONDESTRUCTIVE EXAMINATION REPORT MAGNETIC PARTICLE EXAMINATION	REPORT NUMBER
P-MSP-202		MT- 01 - 117

ISO # / DWG # / FSK #	JOB NAME	JOB NUMBER	DATE
FSK-M-262	Farley Unit 2 SGRP	23734	4/16/01

COMPONENT CONFIGURATION	TIME OF EXAM	PROCEDURE / REV
NOZZLE TO PIPE	☐ N/A ☐ PRE-PWHT ☒ POST-PWHT	MT-ASME III / XI R/ 2

CODE / WELD CLASS	SURFACE CONDITION	MATERIAL TYPE	COMPONENT DIA / SIZE
ASME XI / IWC AL JEA 4.18.01	☒ GROUND ☐ AS WELDED	☒ C/S ☐ ____	32"

EQUIPMENT:
PROD ☐ COIL ☐
YOKE ☒ I.D. No. 7612
☒ CALIBRATION VERIFIED

EXAMINATION MATERIAL:
☒ DRY ☒ NON-FLUORESCENT MANUFACTURER MAGNUFLUX
☐ WET ☐ FLUORESCENT DESIGNATION / COLOR #8A Red
BATCH NO. 006063

DEFECT CODE: C - CRACKS R - ROUNDED INDICATION L - LINEAR INDICATION

PART OR WELD NUMBER	DISPOSITION ACC	DISPOSITION REJ	DEFECT CODE	REMARKS
FW-1-SG	✓			NO INDICATION
ISI No.-APR2-4100-1R				
JEA 4-19-01				

SKETCH / COMMENTS:

M. DURAN DAVIS

M&TE I.D. #	CAL. DUE	EXAMINER	LEVEL	DATE
N/A		M. Duran Davis	II	4/16/01
M&TE I.D. #	CAL. DUE			

NOTES:	REVIEWER	LEVEL	DATE
	[signature]	III	4/17/01

SUC Review [signature] S-III 4-18-01
ANI REVIEW: [signature] 4/19/01

SHARED

Farley Nuclear Plant
Ultrasonic Calibration and Examination Record

FNP-0-NDE-100.43
Southern Nuclear Operating Company

Unit	Sketch/Component Number	Date	Sheet No.
2	APR2-4200-1R	4/18/01	S01F2U103 Page 1 of 2

Procedure/Rev./TCN	Couplant/Batch No.	ThermometerSN/Cal Due Date	Linearity Sheet No.
FNP-0-NDE-100.43 / 0 / N/A	Ultragel II / 00125	FNP-EDT-9003 10/11/02	S01F2L007

Instrument

Make/Model	Panametrics / Epoch IIB	
Serial No.	92042604	
	Ax dB	Circ dB
Reference	30.0	32.2
Scanning	44.0	46.2
Pulser	HIGH	
Frequency	2.25	Rep Rate FIXED
Mode	P/E	Filter ON
Damping	400	Reject 0%

Search Unit

Transducer Mfg.	KBA
Serial No.	45393
Model No.	MSWQC
Size / No.	.5" / 1
Shape	Round
Frequency/Mode	2.25 / Shear
"A" Dimension	0.4"
Nom Angle	45°
Meas Angle	45°
Cable Type /No. Conn.	RG-174 / 0
Cable Length	6'

Calibration Block

Cal. Blk. No.	ALA-24
Thickness	1.2
Cal. Temp	85 °F
Cal. In	12:11:00 PM
Cal. Chk.	02:45 PM
Cal. Out	5:55:00 PM
Ref. Blk. No.	86-4333
Reflector/dB	SDH / 32.1
Amp/Sweep	30 % 2.6

Axial Scans Calibration

Cal. Refl.	Signal Amp.	Sweep Div.	Wmax
1T	80%	4.2	1.2"
2T	40%	8.4	2.4"

Circ Scans Calibration

Cal. Refl.	Signal Amp.	Sweep Div.	Wmax
1T	80%	4.3	1.35"
2T	40%	8.5	2.6"

Calibration Remarks: N/A

Comp Temp. 105 °F **Configuration -** NOZZLE TO PUP-PIECE **Wo Loc.** WELD CL **Lo Loc.** ELBOW EXTRADOS

Scan Dir.	Results NI	Results NRI	Results RI	Ind No.	% DAC	Length L1	Length Lmax	Length L2	Ref. Measurements Wmax	Ref. Measurements Smax	Thickness 1"<– C/L –>1"
8	○	◉	○								
7	○	◉	○								
2	○	○	◉	1	25	360°	59.5"	360°	1.0"	2.04"	SD=1.442", D=1.442"
5	○	○	◉	2	25	360°	59.5	360°	1.15"	1.86"	SD=1.312", D=1.312"

Notes:

Examination/Limitation Remarks: LAMINATION SCAN PERFORMED WITH MSEB sn:06605, 4MHz 3.5x10 mm. NO INDICATIONS.
Id geometry from Root - See IER 011 JEK 4-19-01

Total Length of Weld	Crown Width	Total Length of Weld Examined	Extent of Perpendicular Scans (W)	Extent of Parallel Scans (L)
101.75"	1.75"	5 (L) 101 2 (L) 101 7 and 8 (W) 101	5- From 1.5 to NL 2- From NL to NL	From (5) NL to (2) NL

Primary Examiner	Level	Initials	Assistant Examiner	Level	Initials	Non-Technical Review	Date
Jerry W. Newgard	II	JN	Scott Erickson	II	SRE	J. Edw Aycock	4-19-01

SNC NDE Level II/III Review	Date	Percentage of Code Coverage	ANII Review	Date
[signature] III	4-18-01	100	[signature]	4/20/01

Revision 0

APR2-4200-1R

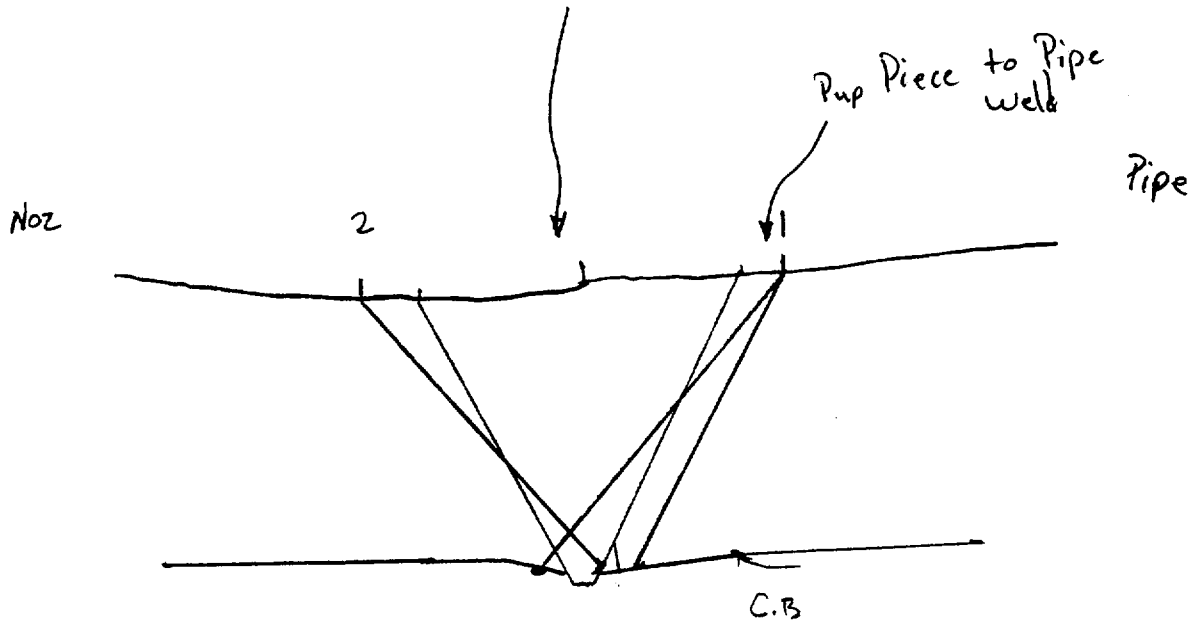

Id geometry from Root - verified with 60°

Daryl Lofkus III 4-18-01

SHARED

Farley Nuclear Plant
Ultrasonic Calibration and Examination Record

FNP-0-NDE-100.43
Southern Nuclear Operating Company

Unit	Sketch/Component Number	Date	Sheet No.
2	APR2-4200-1R	4/18/01	S01F2U106 Page 1 of 2

Procedure/Rev./TCN	Couplant/Batch No.	ThermometerSN/Cal Due Date	Linearity Sheet No.
FNP-0-NDE-100.43 / 0 / N/A	Ultragel II / 00125	FNP-EDT-9003 / 10/11/02	S01F2L007

Instrument

Make/Model	Panametrics / Epoch IIB		
Serial No.	92042604		
	Ax dB	Circ dB	
Reference	49.0	N/A	
Scanning	63.0	N/A	
Pulser	HIGH		
Frequency	2.25	Rep Rate	FIXED
Mode	P/E	Filter	ON
Damping	400	Reject	0%

Search Unit

Transducer Mfg.	KBA		
Serial No.	44694		
Model No.	MSWQC		
Size / No.	.5" / 1	Shape	/ Round
Frequency/Mode	2.25 / Shear		
"A" Dimension	0.6"		
Nom Angle	60°	Meas Angle	57°
Cable Type /No. Conn.	RG-174 / 0		
Cable Length	6'		

Calibration Block

Cal. Blk. No.	ALA-24		
Thickness	1.2		
Cal. Temp	85 °F		
Cal. In	12:15:00 PM		
Cal. Chk.	04:10 PM		
Cal. Out	5:58:00 PM		
Ref. Blk. No.	86-4333		
Reflector/dB	SDH	/ 49.0	
Amp/Sweep	90	%	3.7

Axial Scans Calibration

Cal. Refl.	Signal Amp.	Sweep Div.	Wmax
1T	80%	5.5	1.85"

Circ Scans Calibration

Cal. Refl.	Signal Amp.	Sweep Div.	Wmax
N/A			

Calibration Remarks: N/A

Comp Temp.	Configuration -	Wo Loc.	Lo Loc.
105 °F	NOZZLE TO PUP-PIECE	WELD CL	ELBOW EXTRADOS

Scan Dir.	Results NI	Results NRI	Results RI	Ind No.	% DAC	Length L1	Length Lmax	Length L2	Ref. Measurements Wmax	Ref. Measurements Smax	Thickness 1"<--	Thickness C/L	Thickness -->1"	Notes:
5	○	◉	○											
2	○	○	◉	1	125	360°	7.38"	360°	2.35"	3.18"	1.35"	1.53"	1.42"	SD=2.669", D=1.732"

Examination/Limitation Remarks: EXAMINATION PERFORMED TO VERIFY 45° INDICATIONS.
Id geometry from Root - See IER 011 JEA 4-19-01

Total Length of Weld	Crown Width	Total Length of Weld Examined	Extent of Perpendicular Scans (W)	Extent of Parallel Scans (L)
101.75	1.75"	5 (L) 101 2 (L) 101 7 and 8 (W) N/A	5- From 1.3 to NL 2- From NL to NL	From (5) N/A to (2) N/A

Primary Examiner	Level	Initials	Assistant Examiner	Level	Initials	Non-Technical Review	Date
Jerry W. Newgard	II	JN	Scott Erickson	II	SRE	J. Eric Aycock	4-19-01

SNC NDE Level II/III Review		Date	Percentage of Code Coverage	ANII Review	Date
[signature]	III	4-18-01	N/A	EGWard	4/20/01

Revision 0

APR2-4200-1R

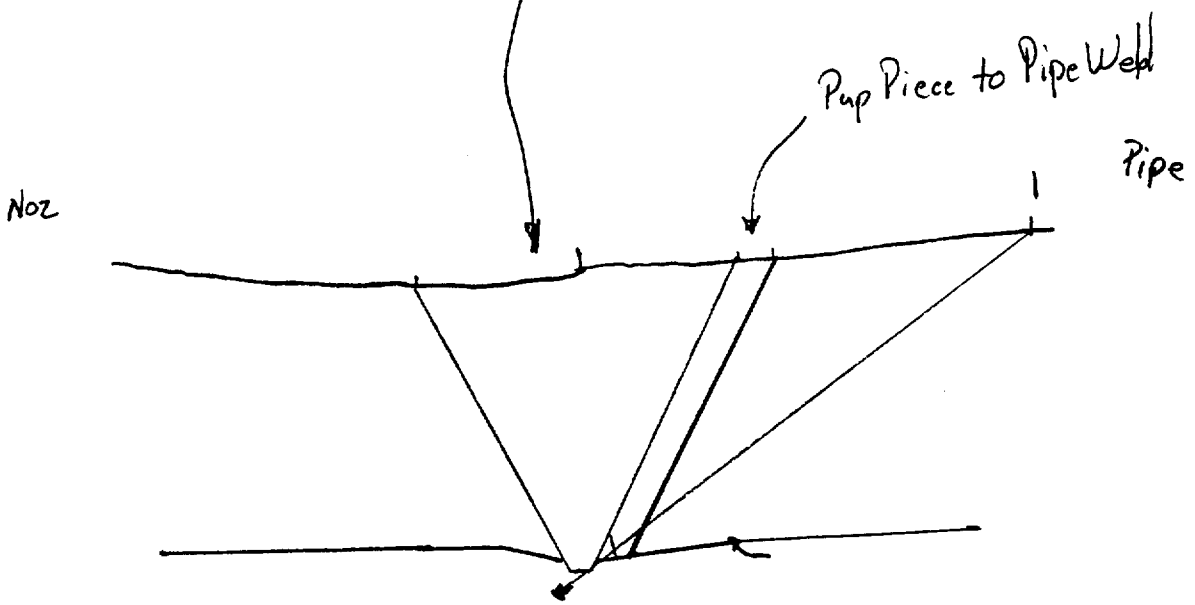

Id geometry from Root - verified with 45°

Darryl A. Lofthus III 4-18-01

BECHTEL

WP& IR #	NONDESTRUCTIVE EXAMINATION REPORT MAGNETIC PARTICLE EXAMINATION	REPORT NUMBER
NSB-233		MT- 01 - 120

ISO # / DWG # / FSK #	JOB NAME	JOB NUMBER	DATE
FSK-M-260	Farley Unit 2 SGRP	23734	4-18-01

COMPONENT CONFIGURATION	TIME OF EXAM	PROCEDURE / REV
"B" Main Steam Nozzle to EC.	☐ N/A ☐ PRE-PWHT ☑ POST-PWHT	MT-ASME III / XI R/ 2

CODE / WELD CLASS	SURFACE CONDITION	MATERIAL TYPE	COMPONENT DIA / SIZE
ASME XI / IWC	☑ GROUND ☐ AS WELDED	☑ C/S ☐	32" / 1.033" T

EQUIPMENT:
PROD ☐ COIL ☐
YOKE ☒ I.D. No. 7612
☑ CALIBRATION VERIFIED

EXAMINATION MATERIAL:
☒ DRY ☒ NON-FLUORESCENT MANUFACTURER MAGNUFLUX
☐ WET ☐ FLUORESCENT DESIGNATION / COLOR 8A-Red
BATCH NO. 006063

DEFECT CODE: C - CRACKS R - ROUNDED INDICATION L - LINEAR INDICATION

PART OR WELD NUMBER	DISPOSITION ACC	DISPOSITION REJ	DEFECT CODE	REMARKS
FW #1-SG	✓			NO INDICATIONS
ISI No.-APR2-4200-1R				
JER 4-19-01				

SKETCH / COMMENTS:

M&TE I.D. #	CAL. DUE	EXAMINER	LEVEL	DATE
NA		Wesley Thompson	II	4-18-01
M&TE I.D. #	CAL. DUE	REVIEWER	LEVEL	DATE
		D Stoll	III	4/18/01

NOTES:

SNC Review J. Eric Laycock L-III 4-18-01
ANII Review: C Eh[illegible] 4/19/01

SHARED

Farley Nuclear Plant
Ultrasonic Calibration and Examination Record

FNP-0-NDE-100.43
Southern Nuclear Operating Company

Unit	Sketch/Component Number	Date	Sheet No.
2	APR2-4300-1R	4/13/01	S01F2U102 Page 1 of 2

Procedure/Rev./TCN	Couplant/Batch No.	ThermometerSN/Cal Due Date	Linearity Sheet No.
FNP-0-NDE-100.43 / 0 / N/A	Ultragel II / 00125	FNP-EDT-9003 10/11/02	S01F2L007

Instrument

Make/Model	Panametrics / Epoch IIB	
Serial No.	92042604	
	Ax dB	Circ dB
Reference	30.0	32.0
Scanning	44.0	46.0
Pulser	HIGH	
Frequency	2.25	Rep Rate FIXED
Mode	P/E	Filter ON
Damping	400	Reject 0%

Search Unit

Transducer Mfg.	KBA
Serial No.	45393
Model No.	MSWQC
Size / No.	.5" / 1
Shape	Round
Frequency/Mode	2.25 / Shear
"A" Dimension	0.4"
Nom Angle	45°
Meas Angle	45°
Cable Type /No. Conn.	RG-174 / 0
Cable Length	6'

Calibration Block

Cal. Blk. No.	ALA-24
Thickness	1.2
Cal. Temp	75 °F
Cal. In	7:10:00 PM
Cal. Chk.	07:51 PM
Cal. Out	9:07:00 PM
Ref. Blk. No.	86-4333
Reflector/dB	SDH / 32.0
Amp/Sweep	30 % 2.5

Axial Scans Calibration

Cal. Refl.	Signal Amp.	Sweep Div.	Wmax
1T	80%	4.2	1.2"
2T	40%	8.4	2.5"

Circ Scans Calibration

Cal. Refl.	Signal Amp.	Sweep Div.	Wmax
1T	80%	5.8	1.35"

Calibration Remarks:

Comp Temp. 89 °F | Configuration - NOZZLE TO PUP-PIECE | Wo Loc. WELD CL | Lo Loc. ELBOW EXTRADOS

Scan Dir.	Results NI	Results NRI	Results RI	Ind No.	% DAC	Length L1	Length Lmax	Length L2	Ref. Measurements Wmax	Ref. Measurements Smax	Thickness 1"<--	Thickness C/L	Thickness -->1"
8	○	◉	○										
7	○	◉	○										
2	○	○	◉	1	25	*	67.25"	*	1.4"	2.06"			
5	○	○	◉	2	30	*	67.25"	*	1.4"	2.0"			

Notes:

* 360° INTERMITTENT, AT VARYING AMPLITUDE
* 360° INTERMITTENT, AT VARYING AMPLITUDE

Examination/Limitation Remarks: Indications most prominent near elbow extrados. LAMINATION SCAN PERFORMED WITH MSEB sn:06605, 4MHz 3.5x10 mm. NO INDICATIONS.
Id geometry from Root. Dal 4-13-01 IER-0089 GEW 4-16-01

Total Length of Weld	Crown Width	Total Length of Weld Examined	Extent of Perpendicular Scans (W)	Extent of Parallel Scans (L)
100.75"	1.6"	5 (L) 101 2 (L) 101 7 and 8 (W) 101	5- From ~~NL~~ 1.8" to NL 2- From NL to NL	From (5) NL to (2) NL

Dal 4-17-01

Primary Examiner	Level	Initials	Assistant Examiner	Level	Initials	Non-Technical Review	Date
Robert G. Auer	II	RGA	Paul DiValerio	II	PD	J. Eric Aycock	4-15-01

SNC NDE Level II/III Review		Date	Percentage of Code Coverage	ANII Review	Date
Darryl Lightsey	III	4-13-01	100	[illegible]	4/16/01

Revision 0

APR2-4300-1R

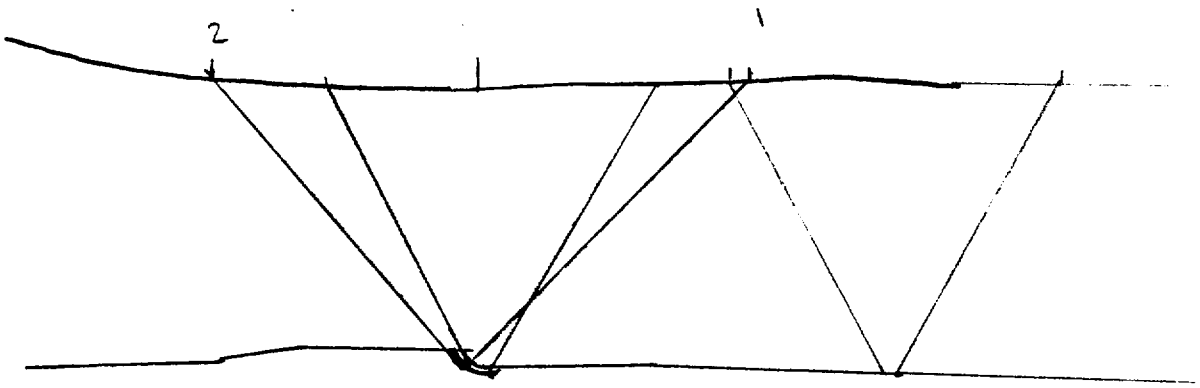

Nozzle

Pup Piece

I.d. geometry from Root, verified with
60° - S01FZU105

Level III 4-13-01

SHARED

Farley Nuclear Plant
Ultrasonic Calibration and Examination Record

FNP-0-NDE-100.43
Southern Nuclear Operating Company

Unit	Sketch/Component Number	Date	Sheet No.
2	APR2-4300-1R	4/13/01	S01F2U105 Page 1 of 2

Procedure/Rev./TCN	Couplant/Batch No.	ThermometerSN/Cal Due Date	Linearity Sheet No.
FNP-0-NDE-100.43 / 0 / N/A	Ultragel II / 00125	FNP-EDT-9003 10/11/02	S01F2L007

Instrument

Make/Model	Panametrics / Epoch IIB	
Serial No.	92042604	
	Ax dB	Circ dB
Reference	49.0	N/A
Scanning	63.0	N/A
Pulser	HIGH	
Frequency	2.25	Rep Rate FIXED
Mode	P/E	Filter ON
Damping	400	Reject 0%

Search Unit

Transducer Mfg.	KBA
Serial No.	44694
Model No.	MSWQC
Size / No.	.5" Shape / Round
Frequency/Mode	2.25 / Shear
"A" Dimension	0.6"
Nom Angle	60° Meas Angle 57°
Cable Type /No. Conn.	RG-174 / 0
Cable Length	6'

Calibration Block

Cal. Blk. No.	ALA-24
Thickness	1.2
Cal. Temp	72 °F
Cal. In	7:15:00 PM
Cal. Chk.	08:23 PM
Cal. Out	9:09:00 PM
Ref. Blk. No.	86-4333
Reflector/dB	SDH / 49.0
Amp/Sweep	90 % 3.7

Axial Scans Calibration

Cal. Refl.	Signal Amp.	Sweep Div.	Wmax
1T	80%	5.5	1.85

Circ Scans Calibration

Cal. Refl.	Signal Amp.	Sweep Div.	Wmax
N/A			

Calibration Remarks:

Comp Temp. 89 °F **Configuration -** NOZZLE TO PUP-PIECE **Wo Loc.** WELD CL **Lo Loc.** ELBOW EXTRADOS

Scan Dir.	Results NI	NRI	RI	Ind No.	% DAC	Length L1	Lmax	L2	Ref. Measurements Wmax	Smax	Thickness 1"<--	C/L	-->1"	Notes:
5	○	○	◉	1	35	*	67.25"	*	2.3"	2.95				360° INTERMITTENT, AT VARYING AMPLITUDE
2	○	○	◉	2	30	*	67.25"	*	2.2"	2.82				360° INTERMITTENT, AT VARYING AMPLITUDE

Examination/Limitation Remarks: EXAMINATION PERFORMED TO VERIFY 45° INDICATIONS.
Id. geometry from Root Def 4-13-01 IER-00879 4-16-01

Total Length of Weld	Crown Width	Total Length of Weld Examined	Extent of Perpendicular Scans (W)	Extent of Parallel Scans (L)
101.75"	1.6"	5 (L) N/A 2 (L) N/A 7 and 8 (W) N/A	5- From N/A to N/A 2- From N/A to N/A	From (5) N/A to (2) N/A

Primary Examiner	Level	Initials	Assistant Examiner	Level	Initials	Non-Technical Review	Date
Robert G. Auer	II	RGA	Paul DiValerio	II	PD	J. Eric Clycock	4-15-01

SNC NDE Level II/III Review	Date	Percentage of Code Coverage	ANII Review	Date
Danny A. Lofters III	4-13-01	N/A	[illegible]	4/16/01

Revision 0

APR2-4300-1R

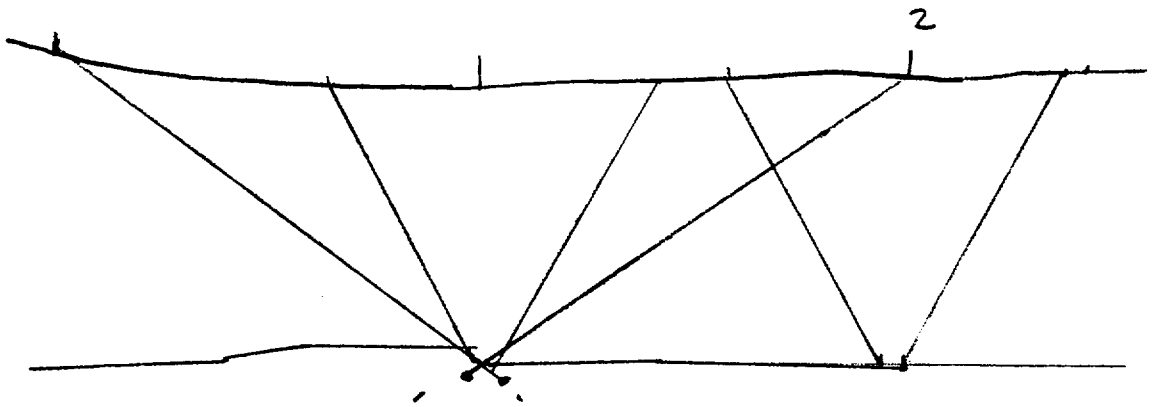

Nozzle

Pup Piece

Id. geometry from Root, verified with 45° - 501F2U102.

[illegible] Level III 4-13-01

BECHTEL

WP& IR #	NONDESTRUCTIVE EXAMINATION REPORT MAGNETIC PARTICLE EXAMINATION	REPORT NUMBER
-MSC-234		MT- 01 - 097

# / DWG # / FSK #	JOB NAME	JOB NUMBER	DATE
FSK-M-258	Farley Unit 2 SGRP	23734	4-13-01

COMPONENT CONFIGURATION	TIME OF EXAM	PROCEDURE / REV
NOZZLE / PUP	☐ N/A ☐ PRE-PWHT ☑ POST-PWHT	MT-ASME III / XI R/ 2

CODE / WELD CLASS	SURFACE CONDITION	MATERIAL TYPE	COMPONENT DIA / SIZE
ASME XI / IWC	☑ GROUND ☐ AS WELDED	☑ C/S ☐ ____	32" / 1.033"

EQUIPMENT:
PROD ☐ ☐ COIL
YOKE ☒ I.D. No. 7612
☑ CALIBRATION VERIFIED

EXAMINATION MATERIAL:
☒ DRY ☒ NON-FLUORESCENT MANUFACTURER MAGNUFLUX
☐ WET ☐ FLUORESCENT DESIGNATION / COLOR 8A RED
BATCH NO. 006063

DEFECT CODE: C - CRACKS R - ROUNDED INDICATION L - LINEAR INDICATION

PART OR WELD NUMBER	DISPOSITION ACC	DISPOSITION REJ	DEFECT CODE	REMARKS
FW-1 SG	✓			NO INDICATIONS

SKETCH / COMMENTS:

ISI No.- APR2-4300-1R
QRW 4-16-01

M&TE I.D. #	CAL. DUE	EXAMINER	LEVEL	DATE
N/A		K. Bow	II	4-13-01
N/A				

NOTES:	REVIEWER	LEVEL	DATE
	E. Bryan	III	4/13/01

SNC Review - J. Eric Alycock & III 4-16-01
ANII Review: E G Ward 4/16/01

SHARED

Farley Nuclear Plant
Ultrasonic Calibration and Examination Record

FNP-0-NDE-100.43
Southern Nuclear Operating Company

Unit	Sketch/Component Number	Date	Sheet No.
2	APR2-4150-19R	4/18/01	S01F2U109 Page 1 of 3

Procedure/Rev./TCN	Couplant/Batch No.	ThermometerSN/Cal Due Date	Linearity Sheet No.
FNP-0-NDE-100.43 / 0 / N/A	Ultragel II / 00125	FNP-EDT-9003 10/11/02	S01F2L007

Instrument

Make/Model	Panametrics / Epoch IIB	
Serial No.	92042604	
	Ax dB	Circ dB
Reference	47.0	N/A
Scanning	61.0	N/A
Pulser	HIGH	
Frequency	2.25	Rep Rate FIXED
Mode	P/E	Filter ON
Damping	400 oh	Reject 0%

Search Unit

Transducer Mfg.	KBA
Serial No.	44694
Model No.	MSWQC
Size / No.	.5" / 1
Shape	Round
Frequency/Mode	2.25 / Shear
"A" Dimension	0.6"
Nom Angle	60°
Meas Angle	57°
Cable Type /No. Conn.	RG-174 / 0
Cable Length	6'

Calibration Block

Cal. Blk. No.	ALA-51
Thickness	0.844
Cal. Temp	75 °F
Cal. In	8:10:00 PM
Cal. Chk.	21:45 P.M.
Cal. Out	11:40:00 PM
Ref. Blk. No.	86-4333
Reflector/dB	SDH / 47.0
Amp/Sweep	60 % 6.0

Axial Scans Calibration

Cal. Refl.	Signal Amp.	Sweep Div.	Wmax
1T	80%	5.9	1.2"

Circ Scans Calibration

Cal. Refl.	Signal Amp.	Sweep Div.	Wmax
N/A			

Calibration Remarks:
ROMPAS GAIN = 47.0 db

Comp Temp.	Configuration -	Wo Loc.	Lo Loc.
90 °F	REDUCER TO NOZZLE	WELD CL	TDC

Scan Dir.	Results NI	NRI	RI	Ind No.	% DAC	Length L1	Lmax	L2	Ref. Measurements Wmax	Smax	Thickness 1"<--	C/L	-->1"	Notes:
5	○	○	◉	1	130	*	41"	*	1.4"	1.7"				* .4" long, ID ROOT- 360°int @ lower amplitude
2	○	○	◉	2	45	*	41"	*	1.5"	1.47"				* .4" long, ID ROOT- 360°int @ lower amplitude
2	○	○	◉	3	100	*	41"	*	1.55"	1.84"				* .4" long, ID ROOT- 360°int @ lower amplitude
8	○	○	◉	4	N/A	-	42.5"	-	-.25	2.32"				excessive weld root drop thru - see plot

Examination/Limitation Remarks: Area around 41" has multiple signals due to root. EXAMINATION PERFORMED TO VERIFY 45° INDICATIONS.
Id geometry from root, excessive drop thru. SEE IER 012 4-19-01

Total Length of Weld	Crown Width	Total Length of Weld Examined	Extent of Perpendicular Scans (W)	Extent of Parallel Scans (L)
51"	1.4"	5 (L) N/A 2 (L) N/A 7 and 8 (W) N/A	5- From N/A to N/A 2- From N/A to N/A	From (5) N/A to (2) N/A

Primary Examiner	Level	Initials	Assistant Examiner	Level	Initials	Non-Technical Review	Date
Robert G. Auer	II	RGA	Paul DiValerio	II	PD	J. Eric Aycock	4-19-01

SNC NDE Level II/III Review	Date	Percentage of Code Coverage	ANII Review	Date
Gary A. Lefler III	4-19-01	N/A	[illegible]	4/20/01

Revision 0

APR2-4150-19R

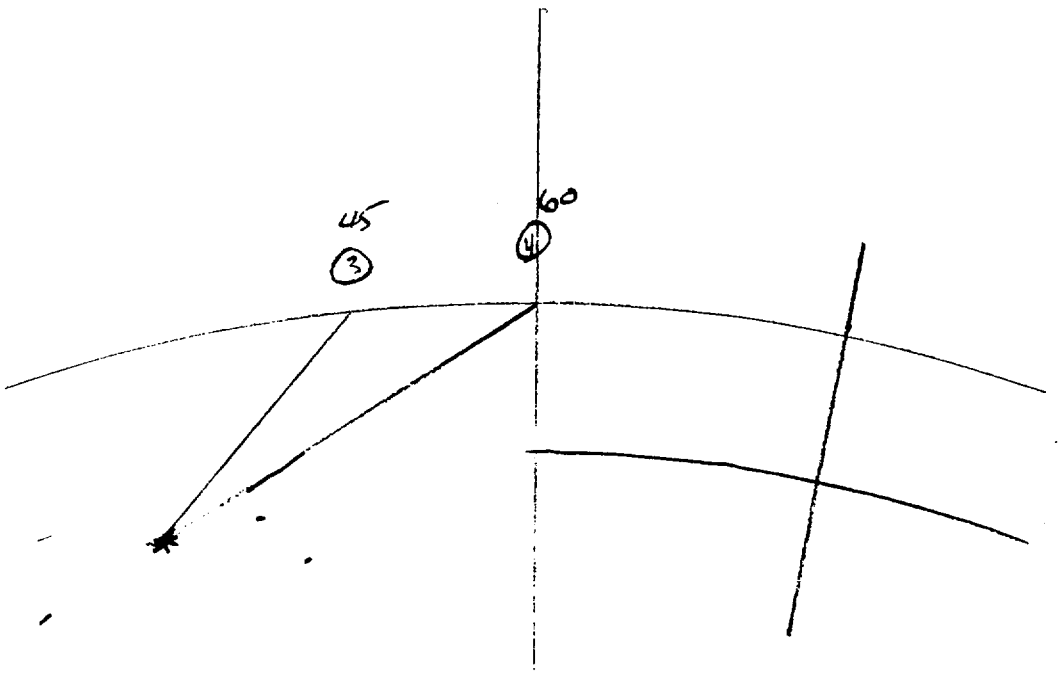

Review of RT film revealed excessive drop thru 39"-40".

A thickness and contour showed deeper/thicker material at. Root. 45°+60° verify Id geometry from root. Can only be seen in one direction. (CCW-8)

Danny A. Lofthus III 4-19-01

SQF24109 2 of 23 DAL 4-19-01

APR2-4150-19R

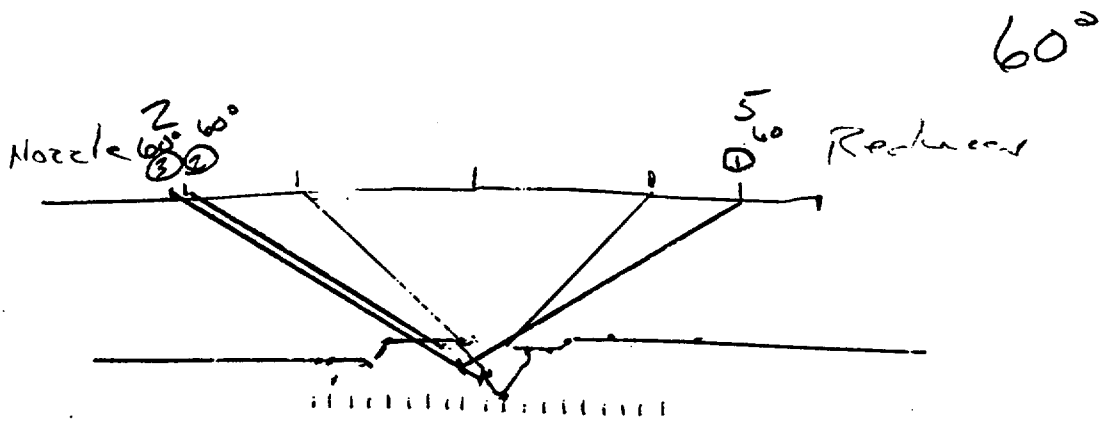

Indications 1, 2, 3 are Id. geometry from root.
T+C taken @ 41".
Review of RT film revealed root conditions.
Indications were also detected with 45°

Larry A. Hoffman III 4-19-01

SHARED

Farley Nuclear Plant
Ultrasonic Calibration and Examination Record

FNP-0-NDE-100.43
Southern Nuclear Operating Company

Unit	Sketch/Component Number	Date	Sheet No.
2	APR2-4150-19R	4/18/01	S01F2U110 Page 1 of 3

Procedure/Rev./TCN	Couplant/Batch No.	ThermometerSN/Cal Due Date	Linearity Sheet No.
FNP-0-NDE-100.43 / 0 / N/A	Ultragel II / 00125	FNP-EDT-9003 10/11/02	S01F2L007

Instrument

Make/Model	Panametrics / Epoch IIB	
Serial No.	92042604	
	Ax dB	Circ dB
Reference	31.0	31.5
Scanning	45.0	45.5
Pulser	HIGH	
Frequency	2.25 M	Rep Rate FIXED
Mode	P/E	Filter ON
Damping	400 oh	Reject 0%

Search Unit

Transducer Mfg.	KBA
Serial No.	45393
Model No.	MSWQC
Size / No.	.5" / 1
Shape	Round
Frequency/Mode	2.25 / Shear
"A" Dimension	0.4"
Nom Angle	45°
Meas Angle	45°
Cable Type /No. Conn.	RG-174 / 0
Cable Length	6'

Calibration Block

Cal. Blk. No.	ALA-51
Thickness	0.844
Cal. Temp	75 °F
Cal. In	8:00:00 PM
Cal. Chk.	21:05 P.M.
Cal. Out	11:45:00 PM
Ref. Blk. No.	86-4333
Reflector/dB	SDH / 31.5
Amp/Sweep	25 % 5.3

Axial Scans Calibration				Circ Scans Calibration			
Cal. Refl.	Signal Amp.	Sweep Div.	Wmax	Cal. Refl.	Signal Amp.	Sweep Div.	Wmax
1T	80%	5.6	0.8"	1T	80%	5.9	0.9"

Calibration Remarks:
ROMPAS GAIN =31.5 db

Comp Temp. 90 °F **Configuration -** REDUCER TO NOZZLE **Wo Loc.** WELD CL **Lo Loc.** TDC

Scan Dir.	Results NI	NRI	RI	Ind No.	% DAC	Length L1	Lmax	L2	Ref. Measurements Wmax	Smax	Thickness 1"<-- C/L -->1"	Notes:
7	○	◉	○									
5	○	○	◉	1	60	*	41	*	.95"	1.24"		
2	○	○	◉	2	50	*	41"	*	1.00	1.27"		
8	○	○	◉	3	35	8	41.5	*	CL	1.8		

*.4" long, ID ROOT- 360°int @ lower amplitude
* .4" long, ID ROOT- 360°int @ lower amplitude
* excessive weld root drop thru - see plot

Examination/Limitation Remarks: LAMINATION SCAN PERFORMED WITH MSEB sn:06605, 4MHz 3.5x10 mm. NO INDICATIONS. Area around 41" has multiple signals due to root.
Id geometry from root - See IER 012 4/19-01

Total Length of Weld	Crown Width	Total Length of Weld Examined	Extent of Perpendicular Scans (W)	Extent of Parallel Scans (L)
51"	1.4"	5 (L) 51 2 (L) 51 7 and 8 (W) 51	5- From NL to NL 2- From NL to NL	From (5) NL to (2) NL

Primary Examiner	Level	Initials	Assistant Examiner	Level	Initials	Non-Technical Review	Date
Robert G. Auer	II	RGA	Paul DiValerio	II	PD	J. Edwin Aycock	4-19-01

SNC NDE Level II/III Review	Date	Percentage of Code Coverage	ANII Review	Date
Darryl L. Lefler III	4-19-01	100	CG Ward	4/20/01

Revision 0

APR2-4150-19R

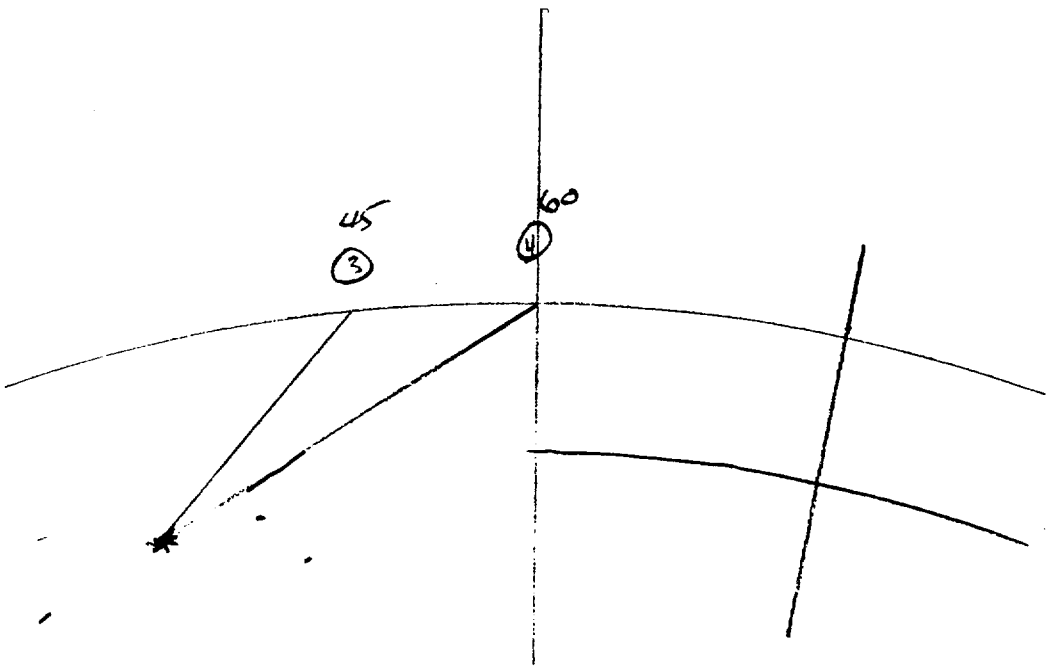

Review of RT film revealed excessive drop thru 39"-40"
A thickness and contour showed deeper/thicker material
at Root. 45° + 60° verify Id. geometry from root.
Can only be seen in one direction (CCW-8)

Gary A. Loftus III 4-19-01

GAL
4-19-01

APR2-4150-19R

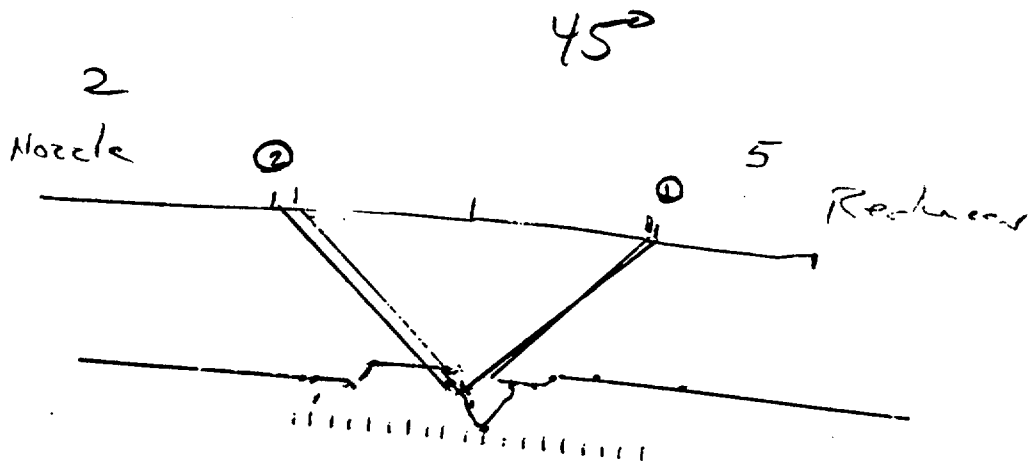

Id. geometry from Root.
Thickness and contour from 41" had root.
Review of RT film had/confirmed root.
Indications confirmed with 60°.
Gary A. Lofthus III 4-19-01

BECHTEL

WP& IR #	NONDESTRUCTIVE EXAMINATION REPORT MAGNETIC PARTICLE EXAMINATION	REPORT NUMBER MT- 01 - ~~124~~ 123 MG 4-18-01
-FWA-205		

ISO # / DWG # / FSK #	JOB NAME	JOB NUMBER	DATE
FSK-M-273	Farley Unit 2 SGRP	23734	4-18-01

COMPONENT CONFIGURATION	TIME OF EXAM	PROCEDURE / REV
NOZ / REDUCER	☐ N/A ☐ PRE-PWHT ☑ POST-PWHT	MT-ASME III / XI R/ 2

CODE / WELD CLASS	SURFACE CONDITION	MATERIAL TYPE	COMPONENT DIA / SIZE
ASME ~~XI~~ / IWC	☐ GROUND ☑ AS WELDED	☑ C/S ☐ ____	16"

EQUIPMENT:
PROD ☐ COIL ☐
YOKE ☒ I.D. No. 7612
☑ CALIBRATION VERIFIED

EXAMINATION MATERIAL:
☒ DRY ☒ NON-FLUORESCENT MANUFACTURER MAGNUFLUX
☐ WET ☐ FLUORESCENT DESIGNATION / COLOR 8A-RED
BATCH NO. 006063

DEFECT CODE: C - CRACKS R - ROUNDED INDICATION L - LINEAR INDICATION

PART OR WELD NUMBER	DISPOSITION ACC	DISPOSITION REJ	DEFECT CODE	REMARKS
F1.1-27-S6	✓			NO INDICATIONS
ISI No.- APR2-4150-19R				
JEW 4-19-01				

SKETCH / COMMENTS:

M&TE I.D. #	CAL. DUE	EXAMINER	LEVEL	DATE
N/A		Wesley Thompson	II	4-18-01
M&TE I.D. #	CAL. DUE	REVIEWER	LEVEL	DATE
		[illegible]	III	4/18/01

NOTES:

SNC Review [illegible] 2-III 4-18-01
ANI Review: CG Ward 4/19/01

SHARED

Farley Nuclear Plant
Ultrasonic Calibration and Examination Record

FNP-0-NDE-100.43
Southern Nuclear Operating Company

Unit	Sketch/Component Number	Date	Sheet No.
2	APR2-4250-14R	4/11/01	S01F2U095 Page 1 of 2

Procedure/Rev./TCN	Couplant/Batch No.	ThermometerSN/Cal Due Date	Linearity Sheet No.
FNP-0-NDE-100.43 / 0 / N/A	Ultragel II / 00125	FNP-EDT-9003 10/11/02	S01F2L007

Instrument

Make/Model: Panametrics / Epoch IIB
Serial No.: 92042604

	Ax dB	Circ dB
Reference	31.0	31.5
Scanning	45.0	45.5
Pulser	HIGH	

Frequency: 2.25 M Rep Rate: FIXED
Mode: P/E Filter: ON
Damping: 400 oh Reject: 0%

Search Unit

Transducer Mfg.: KBA
Serial No.: 45393
Model No.: MSWQC
Size / No.: .5" / 1 Shape / Round
Frequency/Mode: 2.25 / Shear
"A" Dimension: 0.4"
Nom Angle: 45° Meas Angle: 45°
Cable Type /No. Conn.: RG-174 / 0
Cable Length: 6'

Calibration Block

Cal. Blk. No.: ALA-51
Thickness: 0.844
Cal. Temp: 68 °F
Cal. In: 7:10:00 PM
Cal. Chk.: 12:20 AM
Cal. Out: 1:02:00 AM
Ref. Blk. No.: 86-4333
Reflector/dB: SDH / 31.5
Amp/Sweep: 25 % 5.5

Axial Scans Calibration				Circ Scans Calibration			
Cal. Refl.	Signal Amp.	Sweep Div.	Wmax	Cal. Refl.	Signal Amp.	Sweep Div.	Wmax
1T	80%	5.7	0.8"	1T	80%	5.9	0.9"

Calibration Remarks:
ROMPAS GAIN =31db

Comp Temp. 75 °F Configuration - REDUCER TO NOZZLE Wo Loc. WELD CL Lo Loc. TDC

Scan Dir.	Results NI	Results NRI	Results RI	Ind No.	% DAC	Length L1	Length Lmax	Length L2	Ref. Measurements Wmax	Ref. Measurements Smax	Thickness 1"<--	Thickness C/L	Thickness -->1"
8	○	◉	○										
7	○	◉	○										
5	○	○	◉	1	40	*	48"	*	0.85"	1.29"	.85"	.88"	.87"
2	○	○	◉	2	60	*	48"	*	0.9"	1.19"	.85"	.88"	.87"

Notes:

Examination/Limitation Remarks: * REFLECTORS RESEMBLING INDICATIONS 1 AND 2 ALSO OBSERVED @ 0°, 90°, 180°, 270°
Id geometry from Root Wld 4-12-01 See IER-008

Total Length of Weld	Crown Width	Total Length of Weld Examined	Extent of Perpendicular Scans (W)	Extent of Parallel Scans (L)
51"	1.5"	5 (L) 51 2 (L) 51 7 and 8 (W) 51	5- From NL to NL 2- From NL to NL	From (5) NL to (2) NL

Primary Examiner	Level	Initials	Assistant Examiner	Level	Initials	Non-Technical Review	Date
Robert G. Auer	II	RGA	Paul DiValerio	II	PD	J. Edwin Aycock	4-12-01

SNC NDE Level II/III Review		Date	Percentage of Code Coverage	ANII Review	Date
[signature]	III	4-12-01	100%	[signature]	4/16/01

Revision 0

APR2-4250-14R

Reducer

Nozzle

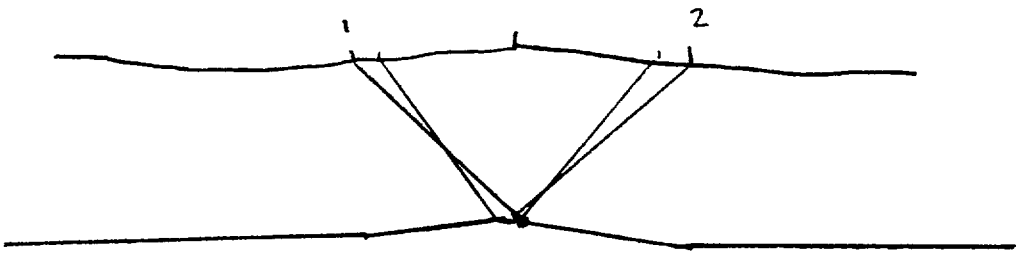

Id geometry from root,
Verified with 60°, see sheet S01F2U097

Gary A. Loftus Level III 4-12-01

SHARED

Farley Nuclear Plant
Ultrasonic Calibration and Examination Record

FNP-0-NDE-100.43
Southern Nuclear Operating Company

Unit	Sketch/Component Number	Date	Sheet No.
2	APR2-4250-14R	4/11/01	S01F2U097 Page 1 of 2

Procedure/Rev./TCN	Couplant/Batch No.	ThermometerSN/Cal Due Date	Linearity Sheet No.
FNP-0-NDE-100.43 / 0 / N/A	Ultragel II / 00125	FNP-EDT-9003 / 10-11-02	S01F2L007

Instrument

Make/Model: Panametrics / Epoch IIB
Serial No.: 92042604

	Ax dB	Circ dB
Reference	47.0	N/A
Scanning	61.0	N/A

Pulser: HIGH
Frequency: 2.25 Rep Rate: FIXED
Mode: P/E Filter: ON
Damping: 400 oh Reject: 0%

Search Unit

Transducer Mfg.: KBA
Serial No.: 44694
Model No.: MSWQC
Size / No.: .5" / 1 Shape: / Round
Frequency/Mode: 2.25 / Shear
"A" Dimension: 0.6"
Nom Angle: 60° Meas Angle: 57°
Cable Type /No. Conn.: RG-174 / 0
Cable Length: 6'

Calibration Block

Cal. Blk. No.: ALA-51
Thickness: 0.844
Cal. Temp: 68 °F
Cal. In: 7:15:00 PM
Cal. Chk.: 12:20 am
Cal. Out: 1:04:00 AM
Ref. Blk. No.: 86-4333
Reflector/dB: SDH / 47.0
Amp/Sweep: 70 % 6.2

Axial Scans Calibration

Cal. Refl.	Signal Amp.	Sweep Div.	Wmax
1T	80%	6.0	1.2"

Circ Scans Calibration

Cal. Refl.	Signal Amp.	Sweep Div.	Wmax
N/A			

Calibration Remarks:
ROMPAS GAIN = 47.0 db

Comp Temp. 75 °F
Configuration - REDUCER TO NOZZLE
Wo Loc. WELD CL
Lo Loc. TDC

Scan Dir.	Results NI	NRI	RI	Ind No.	% DAC	Length L1	Lmax	L2	Ref. Measurements Wmax	Smax	Thickness 1"<--	C/L	-->1"
5	○	○	◉	1	30	*	48"	*	1.5"	1.67"	.85"	.88"	.87"
2	○	○	◉	2	40	*	48"	*	1.35"	1.55"	.85"	.88"	.87"

Notes:

Examination/Limitation Remarks: REFLECTORS RESEMBLING INDICATIONS 1 AND 2 ALSO OBSERVED @ 0°, 90°, 180°, 270° EXAMINATION PERFORMED TO VERIFY 45° INDICATIONS.
Id geometry from Root Mod 4-12-01 See IER-008

Total Length of Weld	Crown Width	Total Length of Weld Examined	Extent of Perpendicular Scans (W)	Extent of Parallel Scans (L)
51"	1.5"	5 (L) N/A 2 (L) N/A 7 and 8 (W) N/A	5- From N/A to N/A 2- From N/A to N/A	From (5) N/A to (2) N/A

Primary Examiner	Level	Initials	Assistant Examiner	Level	Initials	Non-Technical Review	Date
Robert G. Auer	II	RGA	Paul DiValerio	II	PD	J. Eric Aycock	4-12-01

SNC NDE Level II/III Review	Date	Percentage of Code Coverage	ANII Review	Date
Samuel Loftin III	4-12-01	N/A	CGWard	4/16/01

Revision 0

APR2-4250-14R

Reducer

Nozzle

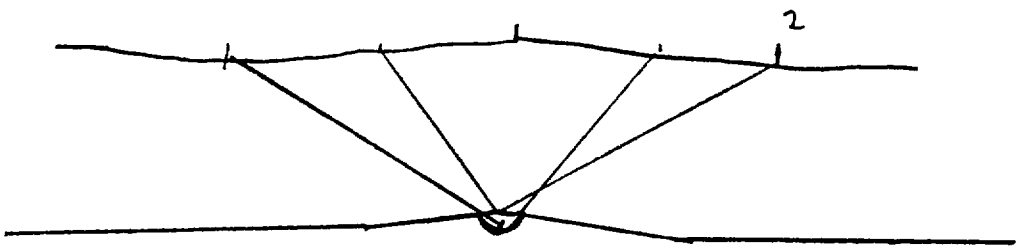

Id. geometry from root,
verified with 45° - see sheet 501F2U095
Gary A. Lofthus Level III 4-12-01

BECHTEL

WP& IR #	NONDESTRUCTIVE EXAMINATION REPORT MAGNETIC PARTICLE EXAMINATION	REPORT NUMBER
-FWB-267		MT- 01 -086

ISO # / DWG # / FSK #	JOB NAME	JOB NUMBER	DATE
FSK-M-275	Farley Unit 2 SGRP	23734	4-11-01

COMPONENT CONFIGURATION	TIME OF EXAM	PROCEDURE / REV
Nozzle weld	☐ N/A ☐ PRE-PWHT ☑ POST-PWHT	MT-ASME III / XI R/ 2

CODE / WELD CLASS	SURFACE CONDITION	MATERIAL TYPE	COMPONENT DIA / SIZE
ASME XI / IWC	☑ GROUND ☐ AS WELDED	☑ C/S ☐ ____	16" x .844

EQUIPMENT:
PROD ☐ COIL ☐
YOKE ☒ I.D. No. 7612
☑ CALIBRATION VERIFIED

EXAMINATION MATERIAL:
☒ DRY ☒ NON-FLUORESCENT MANUFACTURER MAGNUFLUX
☐ WET ☐ FLUORESCENT DESIGNATION / COLOR SA-264
BATCH NO. 006063

DEFECT CODE: C - CRACKS R - ROUNDED INDICATION L - LINEAR INDICATION

PART OR WELD NUMBER	DISPOSITION ACC	DISPOSITION REJ	DEFECT CODE	REMARKS
FW-16-SG	✓			NI
ISI No.-APR2-4250-14R				
Qcn 4-16-01				

SKETCH / COMMENTS: NA

M&TE I.D. #	CAL. DUE	EXAMINER	LEVEL	DATE
NA	NA	DENNIS V. DAWE	II	4-11-01
M&TE I.D. #	CAL. DUE			

TES:	REVIEWER	LEVEL	DATE
FINAL	E. Bryan	III	4/11/01

SNC Review - J. Eric Aycock L-III 4-16-01
ANII Review: [illegible] 4/16/01

SHARED

Farley Nuclear Plant
Ultrasonic Calibration and Examination Record

FNP-0-NDE-100.43
Southern Nuclear Operating Company

Unit	Sketch/Component Number	Date	Sheet No.
2	APR2-4350-22R	4/11/01	S01F2U094 Page 1 of 2

Procedure/Rev./TCN	Couplant/Batch No.	ThermometerSN/Cal Due Date	Linearity Sheet No.
FNP-0-NDE-100.43 / 0 / N/A	Ultragel II / 00125	FNP-EDT-9003 10/11/02	S01F2L007

Instrument

Make/Model: Panametrics / Epoch IIB
Serial No.: 92042604

	Ax dB	Circ dB
Reference	31.0	31.5
Scanning	45.0	45.5
Pulser	HIGH	

Frequency: 2.25 M Rep Rate: FIXED
Mode: P/E Filter: ON
Damping: 400 oh Reject: 0%

Search Unit

Transducer Mfg.: KBA
Serial No.: 45393
Model No.: MSWQC
Size / No.: .5" / 1 Shape: Round
Frequency/Mode: 2.25 / Shear
"A" Dimension: 0.4"
Nom Angle: 45° Meas Angle: 45°
Cable Type /No. Conn.: RG-174 / 0
Cable Length: 6'

Calibration Block

Cal. Blk. No.: ALA-51
Thickness: 0.844
Cal. Temp: 68 °F
Cal. In: 7:10:00 PM
Cal. Chk.: 08:00 PM
Cal. Out: 1:02:00 AM
Ref. Blk. No.: 86-4333
Reflector/dB: SDH / 31.5
Amp/Sweep: 25 % 5.5

Axial Scans Calibration				Circ Scans Calibration			
Cal. Refl.	Signal Amp.	Sweep Div.	Wmax	Cal. Refl.	Signal Amp.	Sweep Div.	Wmax
1T	80%	5.7	0.8"	1T	80%	5.9	0.9"

Calibration Remarks:
ROMPAS GAIN =31db

Comp Temp. 75 °F Configuration - REDUCER TO NOZZLE Wo Loc. WELD CL Lo Loc. TDC

Scan Dir.	Results NI	NRI	RI	Ind No.	% DAC	Length L1	Lmax	L2	Ref. Measurements Wmax	Smax	Thickness 1"<--	C/L	-->1"	Notes:
8	○	●	○											
7	○	●	○											
5	○	○	●	1	50	*	35.5	*	0.85"	1.33"	.81"	.91'	.89"	* 360° VARYING AMPLITUDE
2	○	○	●	2	80	*	35.5	*	0.85"	1.33"	.81"	.91"	.89"	* 360° VARYING AMPLITUDE

Examination/Limitation Remarks: LAMINATION SCAN PERFORMED WITH MSEB sn:06605, 4MHz 3.5x10 mm. NO INDICATIONS.
ID Geometry from Root [illegible] 4-12-01 IER-007

Total Length of Weld	Crown Width	Total Length of Weld Examined	Extent of Perpendicular Scans (W)	Extent of Parallel Scans (L)
51.0"	1.2"	5 (L) 51 2 (L) 51 7 and 8 (W) 51	5- From NL to NL 2- From NL to NL	From (5) NL to (2) NL

Primary Examiner	Level	Initials	Assistant Examiner	Level	Initials	Non-Technical Review	Date
Robert G. Auer	II	RGA	Paul DiValerio	II	PD	J. Eric Clyncke	4-12-01

SNC NDE Level II/III Review		Date	Percentage of Code Coverage	ANII Review	Date
[illegible]	III	4-12-01	100%	[illegible]	4/16/01

Revision 0

APR2-4350-22R

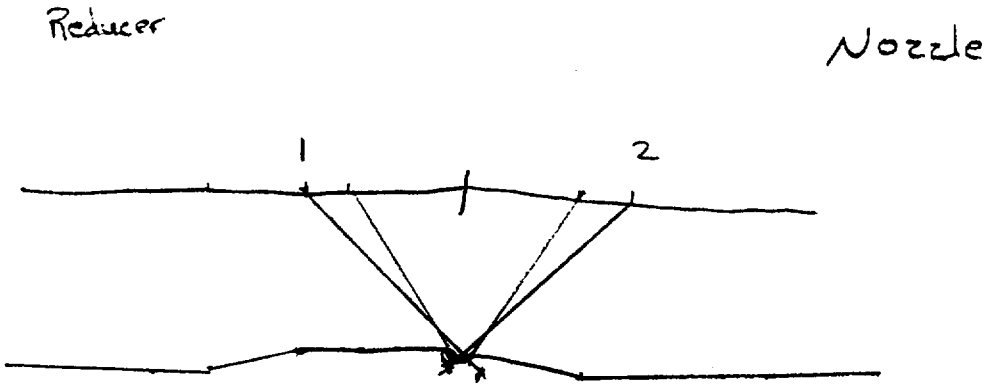

I.D. Geometry from Root, verified with 60°
see sheet # 501F2U096

Gal Level III 4-11-01

SHARED

Farley Nuclear Plant
Ultrasonic Calibration and Examination Record

FNP-0-NDE-100.43
Southern Nuclear Operating Company

Unit	Sketch/Component Number	Date	Sheet No.
2	APR2-4350-22R	4/11/01	S01F2U096 Page 1 of 2

Procedure/Rev./TCN	Couplant/Batch No.	ThermometerSN/Cal Due Date	Linearity Sheet No.
FNP-0-NDE-100.43 / 0 / N/A	Ultragel II / 00125	FNP-EDT-9003 10/11/02	S01F2L007

Instrument

Make/Model	Panametrics / Epoch IIB	
Serial No.	92042604	
	Ax dB	Circ dB
Reference	47.0	N/A
Scanning	61.0	N/A
Pulser	HIGH	
Frequency	2.25	Rep Rate FIXED
Mode	P/E	Filter ON
Damping	400 oh	Reject 0%

Search Unit

Transducer Mfg.	KBA
Serial No.	44694
Model No.	MSWQC
Size / No.	.5" / / Shape / Round
Frequency/Mode	2.25 / Shear
"A" Dimension	0.6"
Nom Angle	60° Meas Angle 57°
Cable Type /No. Conn.	RG-174 / 0
Cable Length	6'

Calibration Block

Cal. Blk. No.	ALA-51
Thickness	0.844
Cal. Temp	68 °F
Cal. In	7:15:00 PM
Cal. Chk.	08:45 PM
Cal. Out	1:04:00 AM
Ref. Blk. No.	86-4333
Reflector/dB	SDH / 47.0
Amp/Sweep	70 % 6.2

Axial Scans Calibration

Cal. Refl.	Signal Amp.	Sweep Div.	Wmax
1T	80%	6.0	1.2"

Circ Scans Calibration

Cal. Refl.	Signal Amp.	Sweep Div.	Wmax
N/A			

Calibration Remarks:
ROMPAS GAIN = 47.0 db

Comp Temp.	Configuration -	Wo Loc.	Lo Loc.
75 °F	REDUCER TO NOZZLE	WELD CL	TDC

Scan Dir.	Results NI	NRI	RI	Ind No.	% DAC	Length L1	Lmax	L2	Ref. Measurements Wmax	Smax	Thickness 1"<--	C/L	-->1"	Notes:
5	○	○	◉	1	120	*	31.5"	*	1.6"	2.0"	.81"	.91"	.89"	* 360°, VARYING AMPLITUDE
2	○	○	◉	2	30	*	31.5"	*	1.55"	1.92"	.81"	.91"	.89"	* 360°, VARYING AMPLITUDE

Examination/Limitation Remarks: EXAMINATION PERFORMED TO VERIFY 45° INDICATIONS.
IER-007

Total Length of Weld	Crown Width	Total Length of Weld Examined	Extent of Perpendicular Scans (W)	Extent of Parallel Scans (L)
51"	1.2"	5 (L) N/A 2 (L) N/A 7 and 8 (W) N/A	5- From N/A to N/A 2- From N/A to N/A	From (5) N/A to (2) N/A

Primary Examiner	Level	Initials	Assistant Examiner	Level	Initials	Non-Technical Review	Date
Robert G. Auer	II	RGA	Paul DiValerio	II	PD	J. Eric Aycock	4-12-01

SNC NDE Level II/III Review		Date	Percentage of Code Coverage	ANII Review	Date
Darryll Lotter	III	4-12-01	N/A	CGKamd	4/16/01

Revision 0

APR2-4350-22R

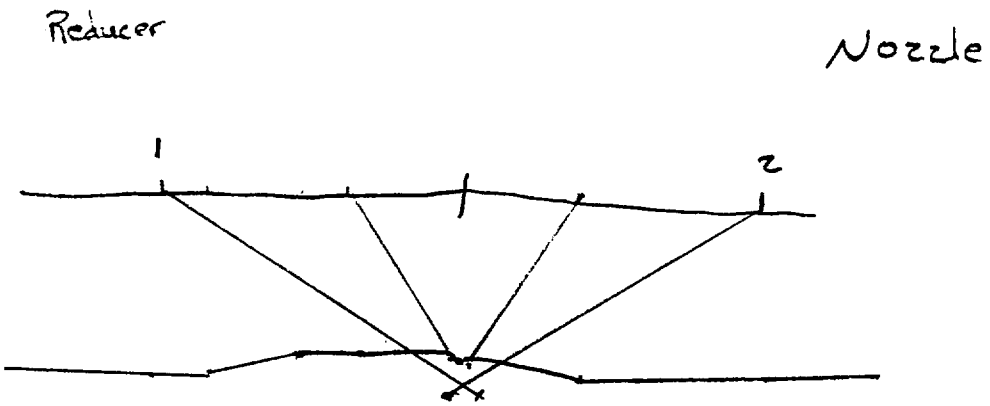

Id geometry from root, verified with 45°

See sheet S01F24094

Gal Level III 4-11-01

WP& IR #	NONDESTRUCTIVE EXAMINATION REPORT MAGNETIC PARTICLE EXAMINATION	REPORT NUMBER
1-FWC-268		MT- 01 - 85

ISO # / DWG # / FSK #	JOB NAME	JOB NUMBER	DATE
FSK-M-277	Farley Unit 2 SGRP	23734	4-11-01

COMPONENT CONFIGURATION	TIME OF EXAM	PROCEDURE / REV
NOZZLE WELD	☐ N/A ☐ PRE-PWHT ☑ POST-PWHT	MT-ASME III / XI R/ 2

CODE / WELD CLASS	SURFACE CONDITION	MATERIAL TYPE	COMPONENT DIA / SIZE
ASME XI / IWC	☑ GROUND ☐ AS WELDED	☑ C/S ☐	16" X .844

EQUIPMENT:
PROD ☐ COIL ☐
YOKE ☒ I.D. No. 7612
☑ CALIBRATION VERIFIED

EXAMINATION MATERIAL:
☒ DRY ☒ NON-FLUORESCENT MANUFACTURER MAGNUFLUX
☐ WET ☐ FLUORESCENT DESIGNATION / COLOR 8A RED
BATCH NO. 006063

DEFECT CODE: C - CRACKS R - ROUNDED INDICATION L - LINEAR INDICATION

PART OR WELD NUMBER	DISPOSITION ACC	DISPOSITION REJ	DEFECT CODE	REMARKS
FW-23-SG	✓			NF 100% INSP
ISI No.-APR2-4350-22R				
Qea 4-16-01				

SKETCH / COMMENTS: N.A

M&TE I.D. #	CAL. DUE	EXAMINER	LEVEL	DATE
NA	NA	DENNIS V. DAWE	II	4-11-01
M&TE I.D. #	CAL. DUE			

NOTES:	REVIEWER	LEVEL	DATE
	S.D. Stoll	III	4/11/01

SNC Review - J. Eric Aycock L-III 4-16-01
ANII Review: [illegible] 4/16/01

WP& IR #	NONDESTRUCTIVE EXAMINATION REPORT MAGNETIC PARTICLE EXAMINATION	REPORT NUMBER MT- 01 ~~4-12-01~~ 042
2-FWC-268		

ISO # / DWG # / FSK #	JOB NAME	JOB NUMBER	DATE
FSK-M-278	Farley Unit 2 SGRP	23734	4-12-01

COMPONENT CONFIGURATION	TIME OF EXAM	PROCEDURE / REV
Branch Con	☑ N/A ☐ PRE-PWHT ☐ POST-PWHT	MT-ASME III / XI R/ 2

CODE / WELD CLASS	SURFACE CONDITION	MATERIAL TYPE	COMPONENT DIA / SIZE
ASME XI / IWC	☐ GROUND ☑ AS WELDED	☑ C/S ☐	2"

EQUIPMENT:
PROD ☐ COIL ☐
YOKE ☒ I.D. No. 7612
☑ CALIBRATION VERIFIED

EXAMINATION MATERIAL:
☒ DRY ☒ NON-FLUORESCENT MANUFACTURER MAGNUFLUX
☐ WET ☐ FLUORESCENT DESIGNATION / COLOR BP RED
BATCH NO. 00606 3

DEFECT CODE: C - CRACKS R - ROUNDED INDICATION L - LINEAR INDICATION

PART OR WELD NUMBER	DISPOSITION ACC	DISPOSITION REJ	DEFECT CODE	REMARKS
FW- 1-SG	✓			NO INDICATIONS
ISI No. - APR2-4350-30 BC				
QEC 4-16-01				

SKETCH / COMMENTS:

M&TE I.D. #	CAL. DUE	EXAMINER	LEVEL	DATE
~~N/A~~ AP 4/12/01		Wesley Thompson II		4-12-01
M&TE I.D. #	CAL. DUE			

TES:	REVIEWER	LEVEL	DATE
	S.D. Stoll	III	4/12/01

SNC Review - [illegible] 4-16-01
ANI Review: [illegible] 4/16/01

WP& IR #	NONDESTRUCTIVE EXAMINATION REPORT MAGNETIC PARTICLE EXAMINATION	REPORT NUMBER
P-FWC-268		MT- 01 - 008

ISO # / DWG # / FSK #	JOB NAME	JOB NUMBER	DATE
FSK-M-278	Farley Unit 2 SGRP	23734	2-12-01

COMPONENT CONFIGURATION	TIME OF EXAM	PROCEDURE / REV
SG - "C" FW FOSAR PORT	☑ N/A ☐ PRE-PWHT ☐ POST-PWHT	MT-ASME III / XI R/ 2

CODE / WELD CLASS	SURFACE CONDITION	MATERIAL TYPE	COMPONENT DIA / SIZE
ASME ~~III~~ XI / ~~2~~ IWC 4500 3/29/01	☐ GROUND ☑ AS WELDED	☑ C/S ☐ ____	2" TO 16"

EQUIPMENT:	EXAMINATION MATERIAL:
PROD ☐ COIL ☐	☒ DRY ☒ NON-FLUORESCENT MANUFACTURER MAGNUFLUX
YOKE ☒ I.D. No. 7778	☐ WET ☐ FLUORESCENT DESIGNATION / COLOR 8A RED
☑ CALIBRATION VERIFIED	BATCH NO. 00G063

DEFECT CODE: C - CRACKS R - ROUNDED INDICATION L - LINEAR INDICATION

PART OR WELD NUMBER	DISPOSITION ACC	DISPOSITION REJ	DEFECT CODE	REMARKS
FW-1 SG FINAL	✓			NO RELEVANT INDICATIONS
4500 (APR2-4350-30BC) 3/29/01				
(ISI #)				

SKETCH / COMMENTS:

N/A

M&TE I.D. #	CAL. DUE	EXAMINER	LEVEL	DATE
N/A		K Gann	II	2-12-01
M&TE I.D. #	CAL. DUE			

OTES:	REVIEWER	LEVEL	DATE
	E. Bey	III	2/27/01

SNC Review - J. Eric Aycock L-III 3-29-01
ANII Review: C Gh[illegible] 3/31/01

2" FW LOOP "C" FOSAR INSPECTION PORT

STEAM GENERATOR

QC1 CONTROLLED COPY

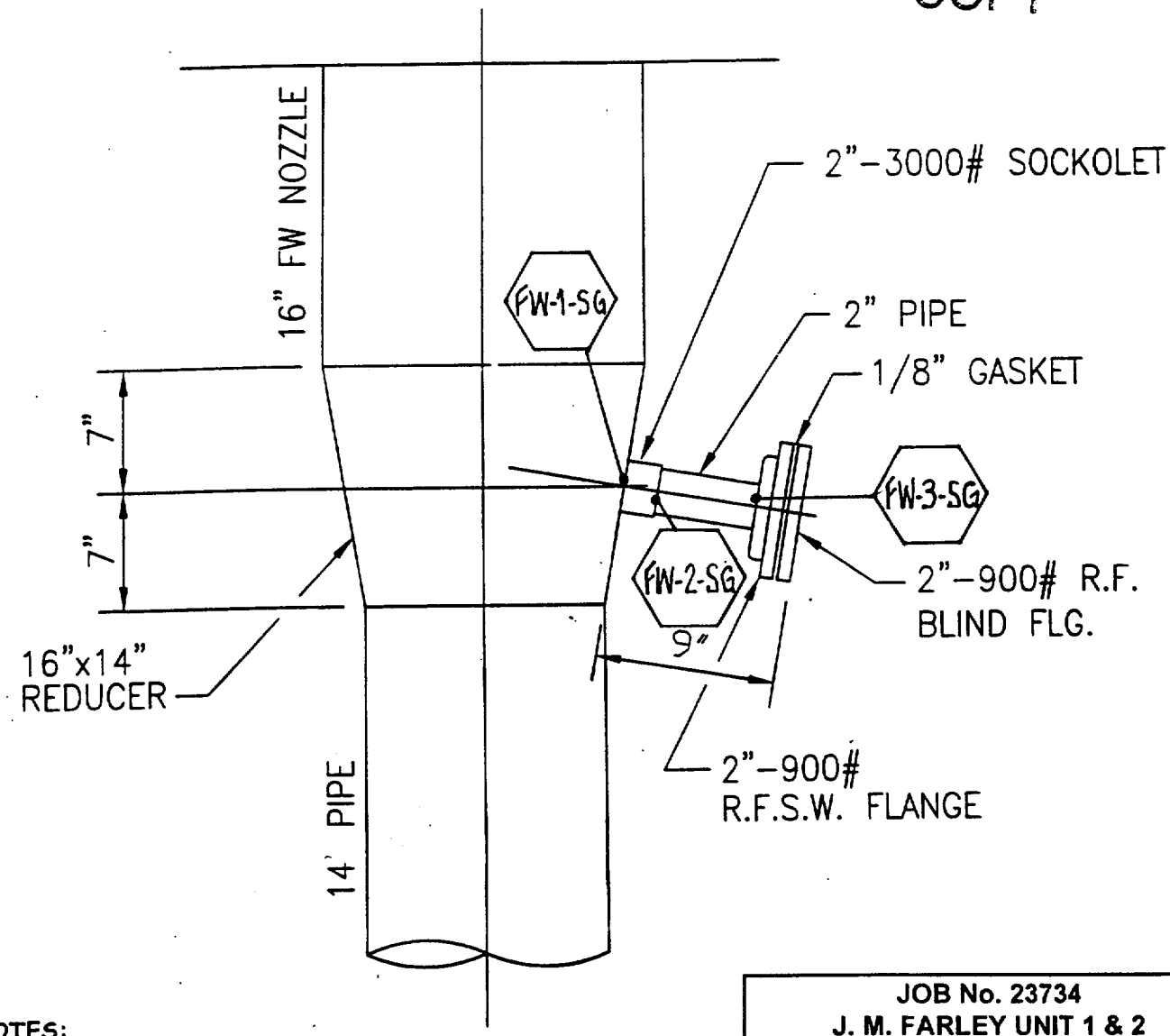

NOTES:

1 ALL WELDING SHALL BE IN ACCORDANCE WITH THE SPM.

2.REFERENCE WORKSHEET 97-9318-M043.

JOB No. 23734
J. M. FARLEY UNIT 1 & 2
SGR PROJECT FIELD SKETCH
WP & IR No. P-FWC-268

ATE	REV.	DESCRIPTION	DRWN	CKD.	PFE
8/1/2000	0	INITIAL ISSUE.	RAW		

TITLE:
FEEDWATER LOOP "C" FOSAR INSPECTION PORT WELD MAP

FSK - # M-278